SAFETY.CAT.COM™

MAINTENANCE INTERVALS

Operation and Maintenance
Manual Excerpt

CATERPILLAR®

CATERPILLAR®

SEBU8135-10
February 2012

Operation and Maintenance Manual

D11T Track-Type Tractor

GEB1-Up (Standard)
TPB1-Up (Carrydozer)

i04708893

Maintenance Interval Schedule

SMCS Code: 7000

Ensure that all safety information, warnings and instructions are read and understood before any operation or any maintenance procedures are performed.

The user is responsible for the performance of maintenance, including all adjustments, the use of proper lubricants, fluids, filters, and the replacement of components due to normal wear and aging. Failure to adhere to proper maintenance intervals and procedures may result in diminished performance of the product and/or accelerated wear of components.

Use mileage, fuel consumption, service hours, or calendar time, WHICH EVER OCCURS FIRST, in order to determine the maintenance intervals. Products that operate in severe operating conditions may require more frequent maintenance.

Note: Before each consecutive interval is performed, all maintenance from the previous interval must be performed.

Note: If Cat HYDO Advanced 10 hydraulic oil is used, the hydraulic oil change interval will change. The normal interval of 2000 hours is extended to 3000 hours. S·O·S services may extend the oil change even longer. Consult your Cat dealer for details.

When Required

Every 10 Service Hours or Daily

Every 50 Service Hours

Every 250 Service Hours

Initial 500 Hours (for New Systems, Refilled Systems, and Converted Systems)

Every 500 Service Hours

Every 1000 Service Hours or 6 Months

Every 2000 Service Hours or 1 Year

Every Year

Every 2 Years

Every 3 Years

Every 4000 Service Hours

Every 6000 Service Hours

Every 6000 Service Hours or 3 Years

Every 12 000 Service Hours or 6 Years

i03655206

Automatic Lubrication Grease Tank - Fill (If Equipped)

SMCS Code: 7540-544-TNK; 7540-544

Reservoir Location

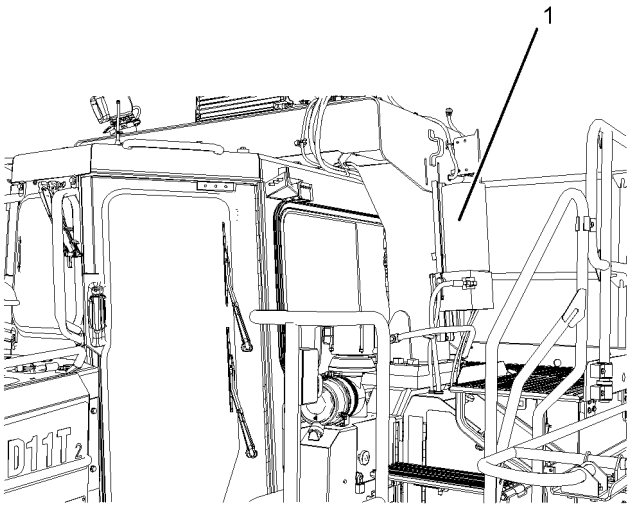

Illustration 148 g01961437

The grease reservoir (1) for the automatic lubrication system is located on the left side of the machine.

Procedure for Refilling Reservoir

Location for Ground Level Fill

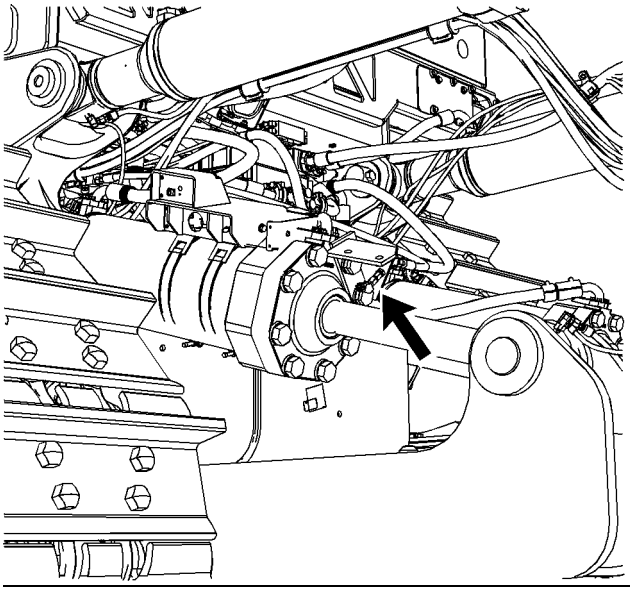

Illustration 149 g01962286

The coupling on the filler assembly is located on the left hand ripper cylinder.

Filling the Reservoir

1. Ensure that the hose is filled with grease in order to prevent air from being pumped into the reservoir.
2. Clean the coupling for filling and the coupling of the hose for filling.
3. Attach the hose for filling to the coupling for refilling. Refill the reservoir to the maximum level. The air is allowed to bleed off during the filling of the reservoir.
4. Disconnect the hose for filling and clean both couplings.

Location for Lubricating

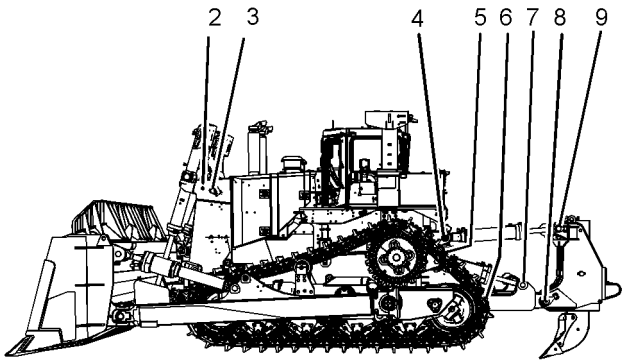

Illustration 150 g01961438

(2),(3) Lift cylinder yoke, left and right pivot bearings (two locations on each side)
(4) Ripper tilt cylinder, left and right frame pivot bearings
(5) Ripper lift cylinder, left and right frame pivot bearings
(6) Ripper frame, left and right pivot bearings
(7) Ripper lift cylinder, left and right pivot bearings
(8) Beam/Carriage, left and right pivot bearings
(9) Ripper tilt cylinder, left and right pivot bearings

Recommended Lubricant

Table 18 lists the recommended lubricant that is used for the automatic lubrication system.

Table 18

Recommended Lubrication for the Automated Lubrication System [1]					
Grease	**NLGI**	**°C**		**°F**	
Caterpillar Autolube	1	-18	+29	0	+85
Caterpillar Autolube	2	-1	+41	+30	+105
Caterpillar Autolube	0	-29	+10	-20	+50
Caterpillar Arctic Platinum	000	-59	+4	-75	+40
Caterpillar Desert Gold	2	+4	+66	+40	+150

[1] In order to use a non-Caterpillar lubricant, the supplier must certify that the lubricant is compatible with Caterpillar's grease. Otherwise, each pin joint should be fully flushed with the new lubricant in order to entirely remove the Caterpillar lubricant. Failure to meet this requirement may lead to failure of a pin joint due to premature breakdown of the lubricant.

i03654919

Automatic Lubrication System Components - Check

SMCS Code: 7540-535

WARNING

A pressure hazard is present. Severe personal injury or death can result from removing hoses or fittings that are under pressure. Relieve the pressure in the system before you remove hoses or fittings.

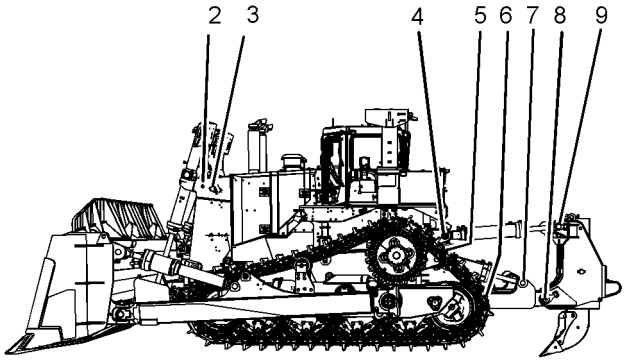

Illustration 151 g01961438

1. Remove any buildup of grease at the fitting locations. Check that each pin joint is receiving a fresh supply of grease.

2. Check the grease level at the top vent port of the reservoir.

   Reference: Refer to Operation and Maintenance Manual, “Automatic Lubrication Grease Reservoir - Fill (If Equipped)” for information on filling the reservoir.

i02461882

Backup Alarm - Test

SMCS Code: 7406-081

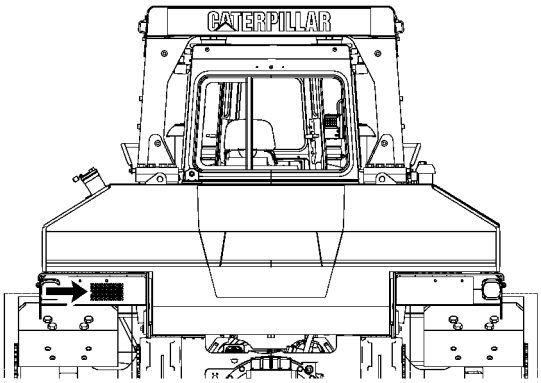

Illustration 152 g01172855

The backup alarm is on the left rear of the machine.

Turn the engine start switch to the ON position in order to perform the test.

Apply the service brakes. Disengage the parking brake switch. Move the transmission control lever to the REVERSE position.

The backup alarm should sound immediately. The backup alarm should continue to sound until the transmission control lever is moved to the NEUTRAL position or to the FORWARD position.

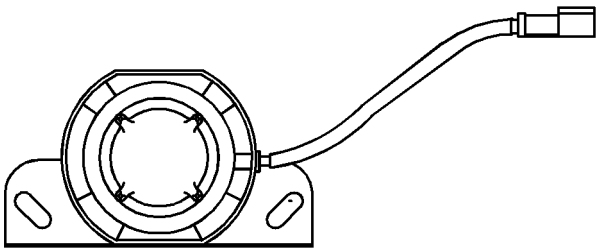

Illustration 153 g01172906

The sound level is nonadjustable.

i02857902

Battery - Inspect

SMCS Code: 1401-040

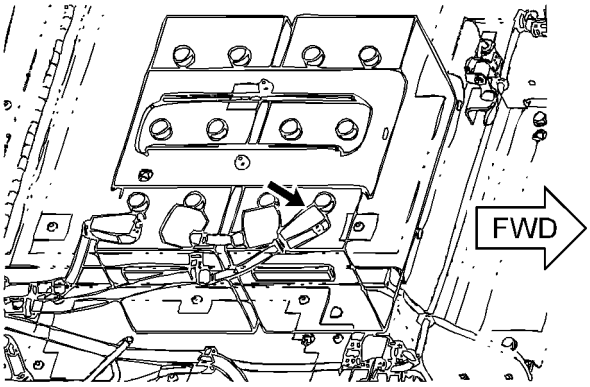

Illustration 154 g01177484

Left side battery

There are battery compartments on the left of the machine and on the right of the machine (not shown).

Tighten the battery retainers on all batteries at every 1000 hour interval.

Perform the following procedures at every 1000 hour interval. Check the following areas more often, as required:

- Clean the top of the batteries with a clean cloth.
- Keep the terminals clean and coat the terminals with petroleum jelly.
- Keep the terminal covers in place.

1. Open the battery access covers. The battery access cover is located on the left side and right side of the machine outside the operator compartment.
2. Clean the top of the batteries with a clean cloth. Keep the terminals clean and coated with petroleum jelly. Install the terminal covers after you coat the terminals.
3. Close the battery access covers.

i02019456

Battery, Battery Cable or Battery Disconnect Switch - Replace

SMCS Code: 1401-510; 1402-510; 1411-510

1. Turn the engine start switch key to the OFF position. Turn all of the switches to the OFF position.
2. Turn the battery disconnect switch to the OFF position. Remove the key.
3. Disconnect the battery cable at the battery disconnect switch. The battery disconnect switch is inside the left engine access door.
4. Disconnect the negative battery cable at the battery.
5. Replace the disconnect switch, the battery cables, or the batteries, as required.
6. Connect the negative battery cable at the battery.
7. Connect the negative battery cable at the battery disconnect switch.
8. Install the key and turn the battery disconnect switch to the ON position.

Battery Recycle

Always recycle a battery. Never discard a battery.

Always return used batteries to one of the following locations:

- A battery supplier
- An authorized battery collection facility
- Recycling facility

i02859785

Belt - Inspect/Replace

SMCS Code: 1397-040; 1397-510

Your engine is equipped with a serpentine belt that drives the alternator and the air conditioner compressor, if equipped.

This engine is equipped with a belt tightener that automatically adjusts the belt to the correct tension.

Inspect the Belt

1. Park the machine on level ground. Lower the dozer blade to the ground. Move the transmission control to the NEUTRAL position and engage the parking brake. Shut off the engine.
2. Turn the battery disconnect switch to the OFF position.
3. Open the rear engine access door that is located on the left hand side of the machine. The serpentine belt is located just forward of the cab firewall.

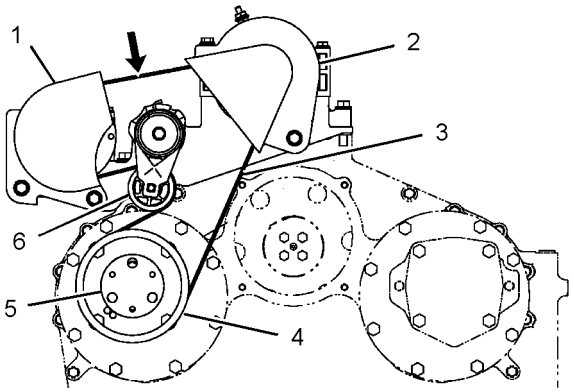

Illustration 155 g01228154

Rear view

4. Inspect the condition of serpentine belt (3). Replace the serpentine belt if excessive wear or cracking has occurred. Wear due to belt slippage indicates that the belt tensioner possibly needs to be replaced.
5. Close the engine access door.
6. Turn the battery disconnect switch to the ON position.

Replace the Belt

1. Replace the belt if any of the following conditions exist:
   - excessive cracking
   - excessive wear
   - excessive damage
2. Park the machine on level ground. Lower the dozer blade to the ground. Move the transmission control to the NEUTRAL position and engage the parking brake. Shut off the engine.
3. Turn the battery disconnect switch to the OFF position.

Remove the Belt

1. Remove the floorplate bolts and open the manhole cover that is located in the cab.

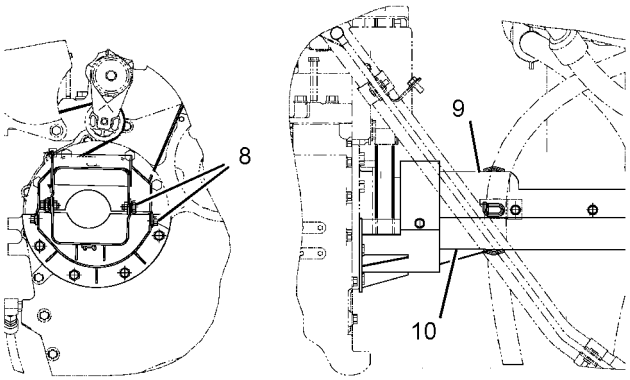

Illustration 156 g01228297

2. Remove eight bolts (8) from coupling guard (10), as shown. Remove any hoses that are attached to the guard.

3. Loosen top guard (9) and lift the top guard for clearance. Do not remove the top guard.

4. Insert a 12.7 mm (0.50 inch) ratchet into square hole on belt tensioner (6).

5. Pry the belt tensioner in a counterclockwise direction in order to remove the tension from the belt.

6. Remove the belt from the pulleys.

Install the Belt

Note: The first spare belt for the first belt replacement is equipped with the machine.

1. Loosen the spare belt from the tie-down straps that surrounds coupling guard (10) (not shown).

2. Free the belt from the guard by pulling the belt backward. Then, slide the belt over coupling shaft (5) in a forward direction. Install the belt on drive pulley (4).

3. Insert a 12.7 mm (0.50 inch) ratchet into the square hole in the tensioner. Push up the ratchet and install the new belt on tensioner (6).

4. Pry the belt tensioner in a clockwise direction in order to install the belt.

Note: Remove the belt guards (1, 2), as needed.

5. To achieve the correct belt tension, move the belt tensioner inward. Tighten belt tensioner (6) in place. Recheck the belt adjustment.

6. Install top guard (9) to coupling guard (10) with eight bolts (8), as shown.

7. Turn the battery disconnect switch to the ON position.

Note: If a new belt is installed, recheck the belt adjustment after 30 minutes of operation.

Note: The second belt replacement will require loosening of the accessory drive shaft.

8. Close the manhole cover in the cab.

i02859815

Braking System - Test

SMCS Code: 4100-081; 4267-081

WARNING

Personal injury can result if the machine moves while testing.

If the machine begins to move during test, reduce the engine speed immediately and engage the parking brake.

Note: The brakes will not hold the machine if you select the “1F” gear position.

Make sure that the area around the machine is clear of personnel and clear of obstacles.

Test the brakes on a dry, level surface.

Fasten the seat belt before you test the brakes.

The following test is used to determine whether the service brake is functional. This test is not intended to determine the maximum brake holding effort. The brake holding effort to hold the brake on this machine will be different. This is because of variations in the engine setting, in the power train efficiency, and in the brake holding ability.

Compare the engine speed at the beginning of machine movement to the engine speed of a prior test. This will be an indication of the amount of system deterioration.

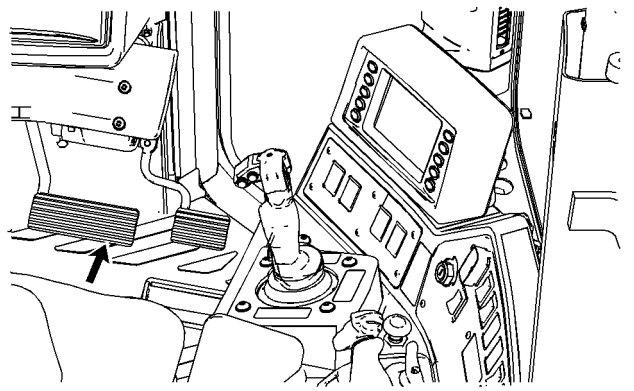

Illustration 157 g01424614

1. Start the engine.
2. Raise all attachments.
3. Depress the brake pedal.
4. Release the parking brake switch.
5. While the brake pedal is depressed, move the directional control lever to the SECOND SPEED NEUTRAL position. The control panel will indicate “2N”.
6. Select the FORWARD position. The control panel will indicate “2F”.
7. Gradually increase the engine speed to full load speed. The machine should not move.
8. Move the throttle switch to LOW IDLE. Turn on the parking brake switch. Lower all attachments to the ground. Apply a slight down pressure. Stop the engine.

NOTICE
If the machine moved while testing the brakes, contact your Caterpillar dealer. Have the dealer inspect and, if necessary, repair the service brake before returning the machine to operation.

i03954072

Bulldozer Blade Connectors - Lubricate

SMCS Code: 6050

S/N: TPB1-Up

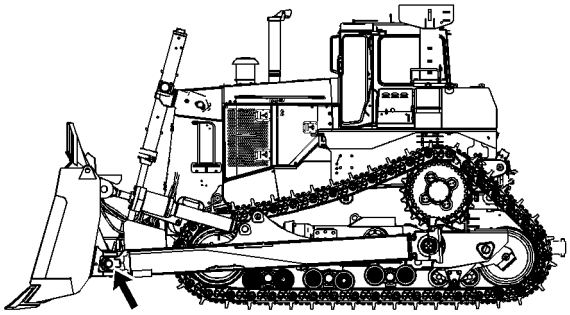

Illustration 158 g01308466

Carrydozer only

Apply MPGM grease to the bulldozer blade connectors. There are two grease fittings on each side.

i03954091

Bulldozer Tilt Brace and Tilt Cylinders - Lubricate

SMCS Code: 5104-086; 6050-086; 6074-086

Lubricate the tilt cylinders and the tilt braces.

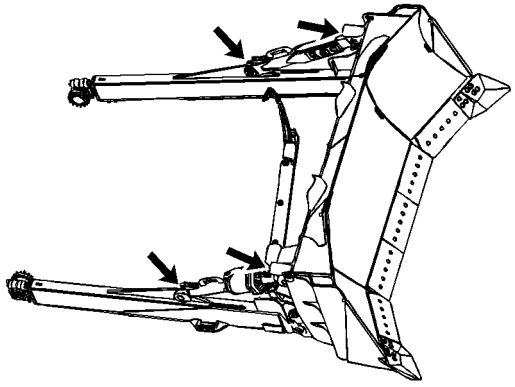

Illustration 159 g02158909

One grease fitting is located at the left front brace assembly or left tilt cylinder (if equipped).

One grease fitting is located at the rod end of the right tilt cylinder.

A grease fitting is located at the cylinder connection to each push arm.

i03423357

Cab Filter (Fresh Air) - Clean/Inspect/Replace

SMCS Code: 7342-040; 7342-070; 7342-510

Note: Clean the filters more often in dusty conditions.

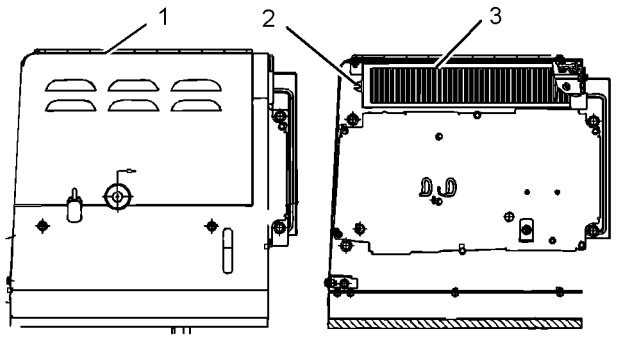

Illustration 160 g01177020

1. Remove filter cover (1). The filter cover is located outside the left side of the cab.
2. Loosen clamp (2) and remove filter element (3).
3. The filter element can be cleaned by using pressure air. Use a maximum air pressure of 205 kPa (30 psi). Direct the air from the clean side to the dirty side.
4. Look through the filter toward a bright light. Inspect the element for damage. Inspect the gaskets for damage. Replace damaged filters.
5. Install filter element (3) and install clamp (2).
6. Close filter cover (1).

GEB386-Up and TPB174-Up

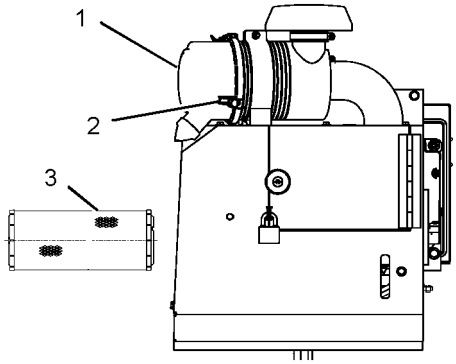

Illustration 161 g01768834

1. Loosen three clamps (2) and remove filter cover (1). The filter cover is located outside the left side of the cab.
2. Remove filter element (3).
3. The filter element can be cleaned by using pressure air. Use a maximum air pressure of 205 kPa (30 psi). Direct the air from the clean side to the dirty side.
4. Look through the filter toward a bright light. Inspect the element for damage. Inspect the gaskets for damage. Replace damaged filters.
5. Install filter element (3) and install filter cover (1). Close three clamps (2).

i02355725

Cab Filter (Recirculation) - Clean/Inspect/Replace

SMCS Code: 7342-040; 7342-070; 7342-510

Note: Clean the filters more often in dusty conditions.

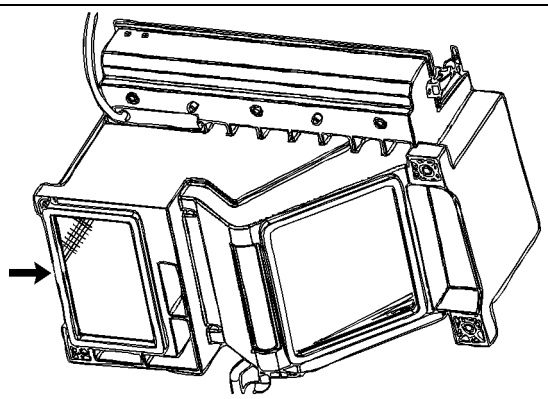

Illustration 162 g01176720

1. Loosen the knob and remove the filter element that is located toward the left rear of the cab beside the seat.
2. The filter element can be cleaned by using pressure air. Use a maximum air pressure of 205 kPa (30 psi). Direct the air from the clean side to the dirty side.
3. Look through the filter toward a bright light. Inspect the element for damage. Inspect the gaskets for damage. Replace damaged filters.
4. Install the filter element.

i03680600

Camera - Clean/Adjust (WAVS (If Equipped))

SMCS Code: 7348

In order to maintain sufficient vision, keep the Work Area Vision System (WAVS) camera lens and the display clean.

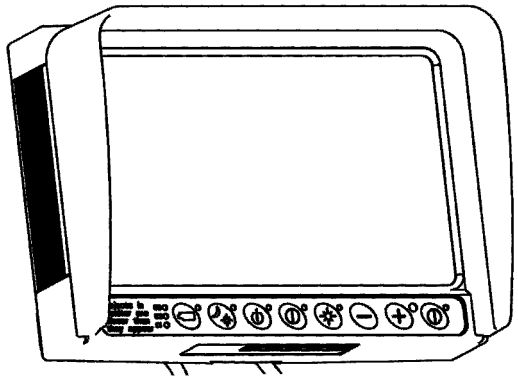

Illustration 163 g01223034

The WAVS display is located in the operator station.

Use a soft, damp cloth in order to clean the display. The display has a soft plastic surface that can be easily damaged by an abrasive material. **The display is not sealed. Do not immerse the display with liquid.**

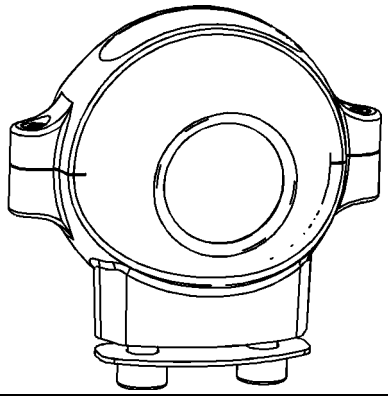

Illustration 164 g01223051

A WAVS camera is located on the rear of the machine, mounted on top of the ROPS, or mounted on the fuel tank.

Use a damp cloth or water spray in order to clean the camera lens. The camera is a sealed unit. The camera is not affected by high pressure spray.

Note: The camera is equipped with an internal heater to help counteract the effects of condensation, snow, or ice.

For more information on WAVS, refer to Operation and Maintenance Manual, SEBU8157, “Work Area Vision System”.

i03642430

Cooler Cores and A/C Condenser - Clean

SMCS Code: 1064-070; 1353-070; 1374-070; 7320-070

Cooler Cores

The following cooler cores are cooled by the hydraulic fan that is located in the radiator guard at the front of the track-type tractor.

Aftercooler core – The aftercooler core cools the inlet manifold air to the engine.

Radiator core – The AMOCS radiator cores cool the engine coolant.

A/C condenser core – The air conditioning condenser core cools the refrigerant in the air conditioning system.

Aftercooler Core

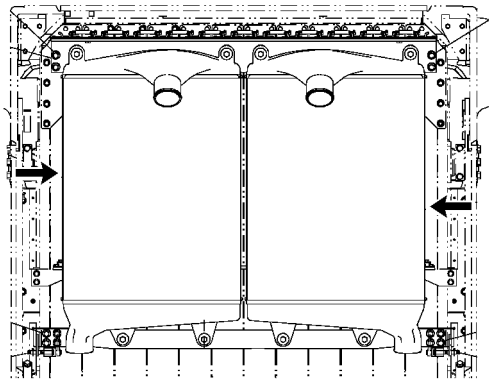

Illustration 165 g01424403

Rear view of dual aftercooler

Radiator Core

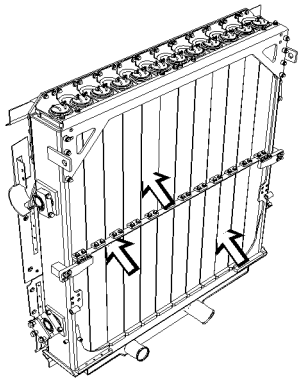

Illustration 166 g01424408

You can use compressed air, high pressure water, or steam to remove dust and other debris from the radiator core. However, the use of compressed air is preferred.

See Special Publication, SEBD0518, “Know Your Cooling System” for the complete procedure for cleaning the radiator core.

A/C Condenser Core

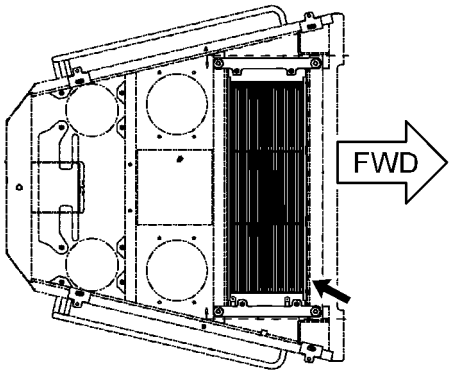

Illustration 167 g01224464

The arrangement for the air conditioner condenser is located under the hood.

Remote A/C Condenser Core

In some machine arrangements, the a/c condenser core is remotely located. A remote mounted a/c condenser core is cooled by fans with electric drive.

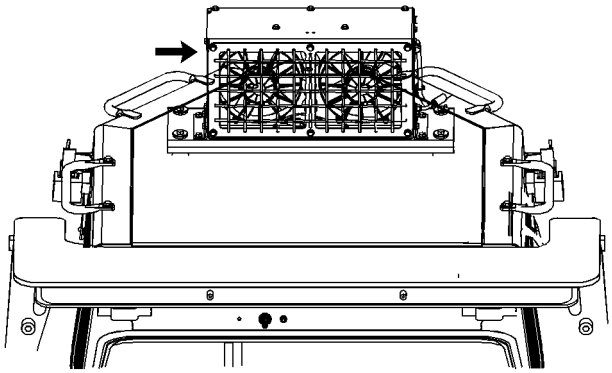

Illustration 168 g01424471

An optional arrangement for the air conditioner condenser is located on the top of the machine.

Inspect

Note: Adjust the frequency of inspection according to the effects of the operating environment.

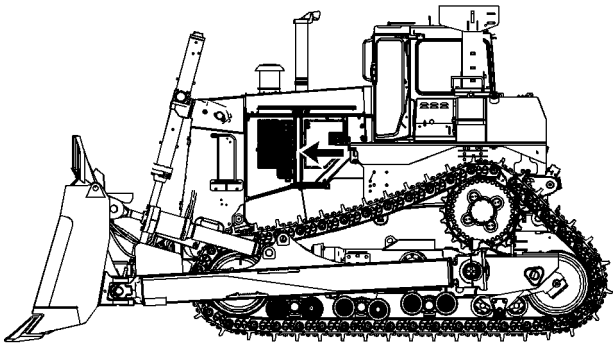

Illustration 169 g01424503

Turn off the engine.

Open both of engine access doors.

Inspect the cooling system for the following conditions: coolant leaks, oil leaks, damaged fins, and tubes. Inspect the following parts of the cooling systems: air lines, connections, and clamps for damage .Make repairs for damage, if necessary.

Note: If parts of the aftercooler system may appear to be damaged or if parts of the aftercooler system are repaired, a leak test is highly recommended. Refer to Special Instruction, SEHS8622, “Using the FT1984 Air-to-Air Aftercooler Leak Test Group”. The FT-1984 Aftercooler Testing Group can be used for aftercoolers that have hoses with an inside diameter of 102 mm (4.00 inches) or 114 mm (4.50 inches).

For more detailed information on testing and inspection, see Special Publication, SEBD0518, “Know Your Track-Type Tractor Cooling System”.

Replacing the Aftercooler Core

Reference: See Disassembly and Assembly, RENR8223, “Aftercooler - Remove and Install” for more information on removing the aftercooler core.

Clean

WARNING

Personal injury can result from air pressure.

Personal injury can result without following proper procedure. When using pressure air, wear a protective face shield and protective clothing.

Maximum air pressure at the nozzle must be less than 205 kPa (30 psi) for cleaning purposes.

Radiator cores, aftercooler cores, and a/c condenser cores needed to be cleaned regularly. Adjust the frequency of cleaning according to the effects of the operating environment.

Tilt the aftercooler cores backward toward the engine in order to clean the cores properly.

Blow out the cores with compressed air. Move the air nozzle in a systematic pattern so that the air flow covers the whole core that includes areas in the corner. Clean the middle space between the aftercooler core and the a/c condenser core.

Use a bent copper tube that is approximately 1/4 -3/8 inch diameter as an extension to the air nozzle. This will facilitate cleaning of the middle spaces.

Do not use steam or high pressure water for cleaning frequently. If steam or high pressure water is required to dislodge any debris that is held deep in the cores, make sure that the cleaning is thorough. This may require partial removal or total removal of the air conditioner condenser for better access. Incomplete cleaning with water may cause remaining debris to harden in place. Use lights and wire probes in order to ensure that the cleaning is thorough and complete. If the debris has hardened in the center of the cores, these cores may need to be removed for thorough cleaning.

If you use a degreaser and steam for removal of oil and grease, wash the core with detergent and hot water. Thoroughly rinse the core with clean water. Dry the cores completely before operating the machine in the work mode.

Dry

If steam or water is used to clean the cores, make sure that the cores are completely dry before the track-type tractor is put back to work.

Use compressed air to blow dry the wet cores, the engine, engine access doors, and the hood.

Close both engine access doors.

If the machine is in a clean environment, start the engine and allow the fan to run until the cooling system has completely dried. Allow the machine to sit overnight before operating the machine in the work mode.

i02462717

Cooling System Coolant (ELC) - Change

SMCS Code: 1395-044

Reference: For information about adding an extender to your cooling system, refer to Operation and Maintenance Manual, “Cooling System Coolant Extender (ELC) - Add” or consult your Caterpillar dealer.

NOTICE
Make sure you read and understand the information in the topics Safety and Cooling System Specifications for all information pertaining to water, antifreeze and supplemental coolant additive requirements before you proceed with maintenance of the cooling system.

Flushing the ELC from the Cooling System

If an ELC was previously used, flush the cooling system with clean water. No other cleaning agents are required.

Flushing a Standard Coolant from the Cooling System

If you change to an ELC from another type of coolant, use a Caterpillar cleaning agent to flush the cooling system. After you drain the cooling system, thoroughly flush the cooling system with clean water. **All of the cleaning agent must be removed from the cooling system.**

Drain the Cooling System

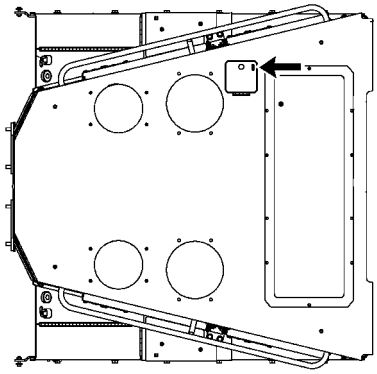

Illustration 170 g01228778

The radiator cap is positioned in the top left side of the hood.

1. Slowly loosen the radiator cap in order to relieve system pressure. Remove the radiator cap.
2. The drain valve is under the radiator. Remove the drain plug with the square drive hole (12.7 mm (0.5 inch)). Install a 25.4 mm (1 inch) pipe with 1-11 1/2 NPTH thread into the drain valve. The pipe requires 1- 11 1/2 NPTF threads. Clamp a 25.4 mm (1 inch) hose to the pipe in order to direct the coolant into a suitable container.
3. Loosen the small bolt on the side of the drain valve. Open the drain valve plug in order to begin coolant flow. Allow the coolant to drain into a suitable container.
4. Close the drain valve. Fill the system with a solution which consists of clean water and of cooling system cleaner. The concentration of the cooling system cleaner should be 5 to 10 percent.
5. Start the engine. Run the engine for 90 minutes. Stop the engine. Drain the cleaning solution into a suitable container.
6. While the engine is stopped, flush the system with water. Flush the system until the draining water is clear.
7. Close the drain valve completely.
8. Add the Extended Life Coolant.

   Reference: For the correct amount of ELC, refer to Special Publication, SEBU6250, “Caterpillar Machine Fluids Recommendations”.
9. Start the engine. Run the engine without the radiator cap until the thermostat opens and the coolant level stabilizes.

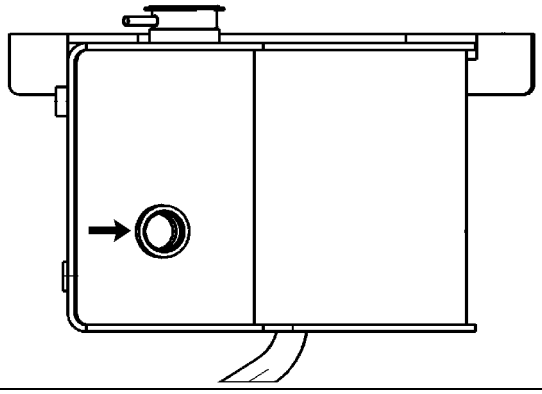

Illustration 171 g01228797

Left side view

10. Add coolant in order to maintain the coolant level above the sight gauge in the coolant tank.

11. If you need to add coolant daily, check the cooling system for leaks.

12. Inspect the radiator cap and the radiator cap seal for debris, for foreign material, or for damage. Clean the radiator cap with a clean cloth. Replace the radiator cap if the radiator cap is damaged.

13. Install the radiator cap.

14. Stop the engine.

i02462970

Cooling System Coolant Extender (ELC) - Add

SMCS Code: 1352-538

When a Caterpillar Extended Life Coolant (ELC) is used, an extender must be added to the cooling system. The amount of extender is determined by the cooling system capacity.

Reference: For additional information, refer to Special Publication, SEBU6250, “Caterpillar Machine Fluids Recommendations” or consult your Caterpillar dealer.

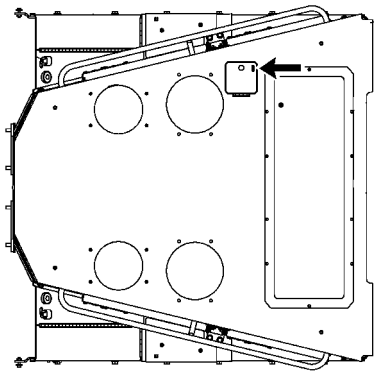

Illustration 172 g01228778

The radiator cap is positioned in the top left side of the hood.

1. Loosen the radiator cap slowly in order to relieve pressure. Remove the radiator cap.

2. It may be necessary to drain some coolant from the radiator so that Extender can be added to the cooling system.

NOTICE

Care must be taken to ensure that fluids are contained during performance of inspection, maintenance, testing, adjusting and repair of the machine. Be prepared to collect the fluid with suitable containers before opening any compartment or disassembling any component containing fluids.

Refer to Special Publication, NENG2500, “Caterpillar Tools and Shop Products Guide”, for tools and supplies suitable to collect and contain fluids in Caterpillar machines.

Dispose of all fluids according to local regulations and mandates.

3. Add 5.4 L (1.42 US gal or 182 fl oz) of Extender to the cooling system.

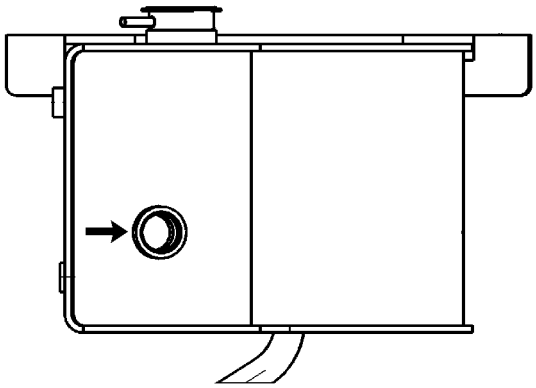

Illustration 173 g01228797

Left side view

4. Add coolant in order to maintain the coolant level above the sight gauge in the coolant tank.

5. Inspect the radiator cap and the radiator cap seal for debris, for foreign material, or for damage. Clean the radiator cap with a clean cloth. Replace the radiator cap if the radiator cap is damaged.

6. Install the radiator cap.

i02463163

Cooling System Coolant Level - Check

SMCS Code: 1353-535-FLV; 1395-535-FLV

WARNING

At operating temperature, the engine coolant is hot and under pressure.

Steam can cause personal injury.

Check the coolant level only after the engine has been stopped and the fill cap is cool enough to touch with your bare hand.

Remove the fill cap slowly to relieve pressure.

Cooling system conditioner contains alkali. Avoid contact with the skin and eyes to prevent personal injury.

Open the front left engine access door. The sight glass for the coolant level is located on the left side of the top water tank.

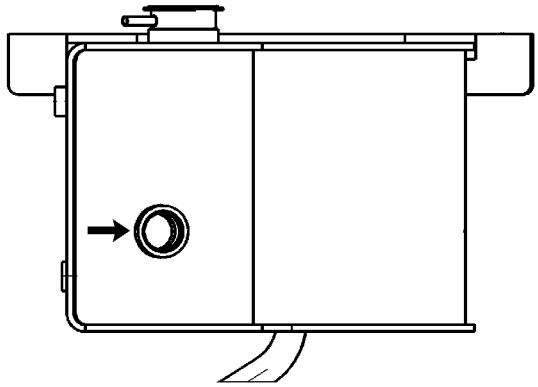

Illustration 174 g01228797

1. Maintain the coolant level above the sight glass.

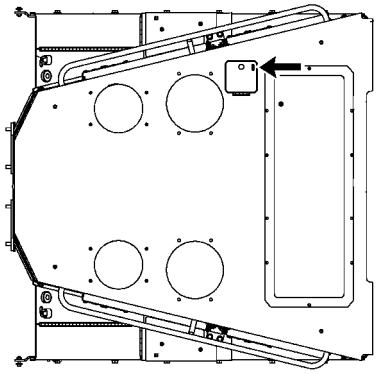

Illustration 175 g01228778

The radiator cap is positioned in the top left side of the hood.

2. If necessary, open the radiator cap access cover. Remove the radiator cap. Add coolant into the coolant tank. Do not overfill the tank.

3. Inspect the radiator cap and the radiator cap seal for debris, for foreign material, or for damage. Clean the radiator cap with a clean cloth. Replace the radiator cap if the radiator cap is damaged.

4. Install the radiator cap.

i02861797

Cooling System Coolant Sample (Level 2) - Obtain

SMCS Code: 1350-008; 1395-008; 1395-554; 7542

Level 2 Analysis

NOTICE

Always use a designated pump for oil sampling, and use a separate designated pump for coolant sampling. Using the same pump for both types of samples may contaminate the samples that are being drawn. This contaminate may cause a false analysis and an incorrect interpretation that could lead to concerns by both dealers and customers.

NOTICE
Care must be taken to ensure that fluids are contained during performance of inspection, maintenance, testing, adjusting and repair of the product. Be prepared to collect the fluid with suitable containers before opening any compartment or disassembling any component containing fluids.

Refer to Special Publication, NENG2500, “Caterpillar Dealer Service Tool Catalog” for tools and supplies suitable to collect and contain fluids on Caterpillar products.

Dispose of all fluids according to local regulations and mandates.

Testing the coolant can be done at your Caterpillar dealer. Caterpillar S·O·S Coolant Analysis is the best way to monitor the condition of your coolant and your cooling system. S·O·S Coolant Analysis is a program that is based on periodic samples. See Operation and Maintenance Manual, SEBU6250, “Caterpillar Machine Fluid Recommendations”, “S.O.S Coolant Analysis” for more information.

Perform a Coolant Analysis (Level 2) at the initial 500 hours. Perform the analysis yearly after the initial 500 hours.

Use the following guidelines for proper sampling of the coolant:

- Complete the information on the label for the sampling bottle before you begin to take the samples.
- Keep the unused sampling bottles stored in plastic bags.
- Obtain coolant samples directly from the coolant sample port. You should not obtain the samples from any other location.
- Keep the lids on empty sampling bottles until you are ready to collect the sample.
- Place the sample in the shipping sleeve immediately after obtaining the sample in order to avoid contamination.
- Never collect samples from expansion bottles.
- Never collect samples from the drain for a system.

1. Park the machine on a hard, level surface. Set the engine at low idle speed.

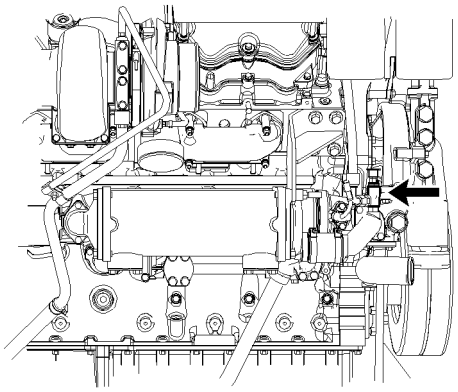

Illustration 176 g01425463
Right side view

2. The coolant sampling valve is located below the primary fuel filter on the front right side of the engine (not shown). Remove the protective cap from the sampling valve.
3. Use a 169-8373 Fluid Sampling Bottle in order to obtain a sample.
4. Replace the protective cap.

Submit the sample for Level 2analysis.

i02859128

Cooling System Water Temperature Regulator - Replace

SMCS Code: 1355-510

Replace the temperature regulators on a regular basis in order to reduce the chance of unscheduled downtime and of problems with the cooling system.

The temperature regulators should be replaced after the cooling system has been cleaned. Replace the temperature regulators while the cooling system is completely drained or while the cooling system coolant is drained to a level that is below the regulator housing.

NOTICE
Failure to replace the engine's thermostat on a regularly scheduled basis could cause severe engine damage.

NOTICE
Replace the thermostat on a regular basis in order to reduce the chance of unscheduled downtime and of problems with the cooling system.

A new thermostat should be installed after the cooling system has been cleaned. Install the thermostat while the cooling system is completely drained or while the cooling system coolant is drained to a level that is below the thermostat housing.

WARNING

Personal injury can result from hot coolant, steam and alkali.

At operating temperature, engine coolant is hot and under pressure. The radiator and all lines to heaters or the engine contain hot coolant or steam. Any contact can cause severe burns.

Remove filler cap slowly to relieve pressure only when engine is stopped and radiator cap is cool enough to touch with your bare hand.

Do not attempt to tighten hose connections when the coolant is hot, the hose can come off causing burns.

Cooling System Conditioner contains alkali. Avoid contact with skin and eyes.

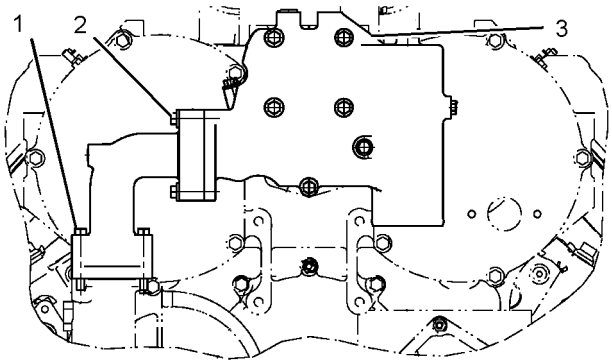

Illustration 177 g01425470

1. The housing (3) for the temperature regulators is located on the front of the engine.
2. Remove the bolts (1) and (2) from the elbow. Remove the elbow.
3. Remove the two temperature regulators and the seals.

NOTICE
Since Caterpillar engines incorporate a shunt design cooling system, it is mandatory to always operate the engine with a thermostat.

Depending on load, failure to operate with a thermostat could result in either an overheating or an overcooling condition.

NOTICE
If the thermostat is installed incorrectly, it will cause the engine to overheat.

4. Install new seals and install new temperature regulators. Install a new housing gasket.
5. Install the elbow.

i02349716

Cutting Edges and End Bits - Inspect/Replace

SMCS Code: 6801-040; 6801-510; 6804-040; 6804-510

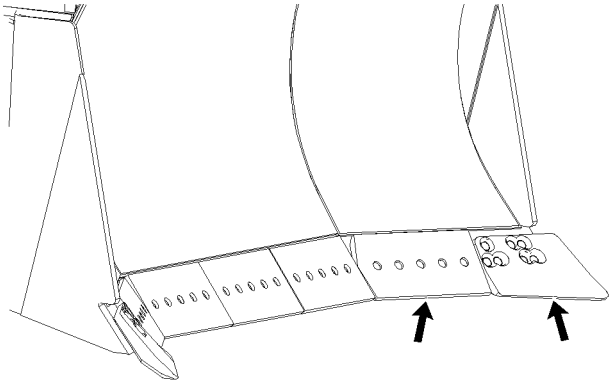

Illustration 178 g01051836

1. Raise the bulldozer blade and block up the bulldozer blade at a minimum height.
2. Remove the bolts. Then remove the cutting edge and the end bits.
3. Thoroughly clean all contact surfaces.
4. Inspect the opposite side of the cutting edge. If the opposite side of the cutting edge is not worn, turn the opposite side of the cutting edge outward and install the cutting edge.
5. If both sides of the cutting edge are worn, install a new cutting edge.

Note: When the cutting edge is within 10 mm (0.4 inch) of the bottom of the support, replace the cutting edge. **Do not allow wear to occur on the support.**

6. If the bottom edge or the outside edge of the end bit is worn, install a new end bit.

Note: When the end bit is within 10 mm (0.4 inch) of the bottom of the support, replace the end bit. When the end bit is within 10 mm (0.4 inch) of the outside edge of the support, replace the end bit. **Do not allow any wear to occur on the support.**

7. Install all bolts and tighten the bolts to the specified torque.

   Reference: For more information, refer to Specifications, SENR3130, “Torque Specifications”.

8. Strike the bolt heads with a hammer. Tighten the bolts to the specified torque again.

9. Raise the bulldozer blade and remove the blocking. Lower the bulldozer blade to the ground.

i02861840

Electro/Hydraulic Oil Filter - Change

SMCS Code: 5068-510-FI

WARNING

At operating temperature, the hydraulic tank is hot and under pressure.

Hot oil and components can cause personal injury. Do not allow hot oil or components to contact skin.

Remove the filler cap only when the engine is stopped, and the filler cap is cool enough to touch with your bare hand. Remove the filler cap slowly in order to relieve pressure.

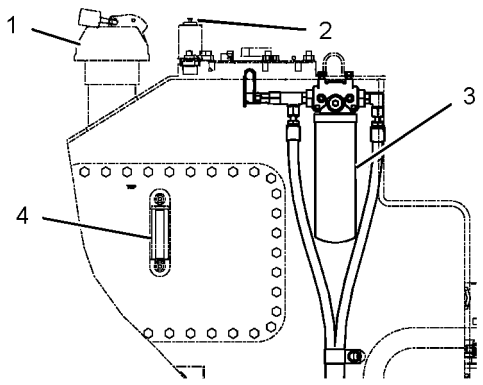

Illustration 179 g01425501

1. The hydraulic tank is located on the right side of the machine. Press the button on breaker relief valve (2) next to the filler cap (1) in order to relieve any tank pressure. Open the filler cap by turning the cap counterclockwise.

2. Remove filter housing (3).

3. Remove the filter element. Properly discard the filter element.

4. Install a new filter element.

5. Install filter housing (3). Lubricate the seal with hydraulic oil.

6. Maintain the hydraulic oil to the “FULL” mark (4) in the sight gauge.

7. Install hydraulic tank filler cap (1).

i02061807

Electronic Unit Injector - Inspect/Adjust

SMCS Code: 1290-025; 1290-040

WARNING

The Electronic Control module produces high voltage. To prevent personal injury make sure the Electronic Control Module is not powered and the unit injector solenoids are disconnected.

NOTICE

The camshafts must be correctly timed with the crankshaft before an adjustment of the unit injector lash is made. The timing pins must be removed from the camshafts before the crankshaft is turned or damage to the cylinder block will be the result.

The operation of Caterpillar engines with improper adjustments of the electronic unit injector can reduce engine efficiency. This reduced efficiency could result in excessive fuel usage and/or shortened engine component life.

Adjust the electronic unit injector at the same interval as the valve lash adjustment.

Refer to your machine's Service Manual or your Caterpillar dealer for the complete adjustment procedure.

i03619440

Engine Air Filter Primary and/or Secondary Element - Clean/Replace

SMCS Code: 1054-070-SE; 1054-070-PY; 1054-510-PY; 1054-510-SE

Primary Filter

NOTICE
Service the primary filter element only when the alert indicator for the intake air filter is flashing. Do not open the filter compartment unless it is time for service. Opening the filter compartment can cause dirt to get into the clean side of the filter housing.

NOTICE
Extremely short air filter life can result if the precleaner system malfunctions. If air filter life is drastically reduced from typical for the operating conditions, consult your Caterpillar Dealer. The exhaust system dust ejector for the strata tube precleaner must pull a minimum vacuum of 508 mm (20 inch) of water.

NOTICE
Service the engine air filters with the engine stopped. Engine damage could result.

NOTICE
Always leave the secondary filter element in place while you clean the primary element, or while you clean the air cleaner housing.

NOTICE
Do not use the filter for longer than one year.

1. Open the engine compartment's access door, if equipped.

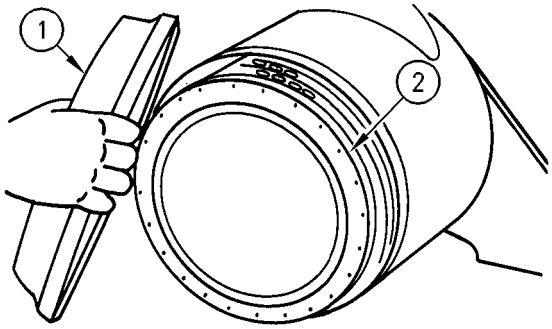

Illustration 180 g00470852

2. Remove the air cleaner cover (1). Pull out in order to remove the element.
3. Remove the primary filter element (2) from the air cleaner housing.
4. Mark the secondary filter element in order to show that the primary filter element has been serviced. The secondary filter element should be replaced when the primary filter element is serviced for the third time. Refer to the section “Secondary Filter”.

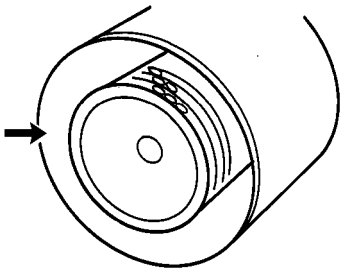

Illustration 181 g00470857

5. Clean the inside of the air cleaner housing. Keep the secondary filter element in place while you clean the housing.
6. If the primary filter element has not been cleaned six times, inspect the primary filter element. If the primary filter element has been cleaned six times, replace the primary filter element. Proceed to Step 9.

7. Inspect the primary filter element. Inspect the filter element for holes and for tears by looking through the filter element. Look toward a bright light. Inspect the element for damaged gaskets or for dented metal parts. Replace damaged filters. Always crush damaged filter elements. Properly discard the filter elements. If you replace the primary filter element, proceed to step 9.

8. If the primary filter element is not damaged and the element has not been previously cleaned six times, clean the element. The filter element can be cleaned by using pressure air. Use a maximum air pressure of 205 kPa (30 psi). Direct the air from the clean side to the dirty side. In order to show that the filter element has been cleaned, mark the element. The primary filter element can be cleaned up to six times.

NOTICE
Do not clean the filter elements by bumping or tapping them. Do not use filter elements with damaged pleats, gaskets, or seals. Do not wash the filter elements.

9. Push the filter element firmly in order to properly seat the element. Write the date on the element, if the primary element is replaced.

10. Install the air cleaner cover.

11. Close the access door, if equipped.

Secondary Filter

NOTICE
Always replace the secondary filter element. Never attempt to reuse it by cleaning.

The secondary filter element should be replaced at the time the primary element is serviced for the third time.

The secondary filter element should also be replaced if the yellow piston in the filter element indicator enters the red zone after installation of a clean primary element, or if the exhaust smoke is still black.

NOTICE
The filter should be kept in service for no longer than one year.

NOTICE
Always leave the secondary filter element in place while you clean the air cleaner housing.

1. Open the engine access door, if equipped.

2. Remove the air cleaner housing cover.

3. Remove the primary filter element. Refer to the section “Primary Filter”.

4. Clean the inside of the air cleaner housing.

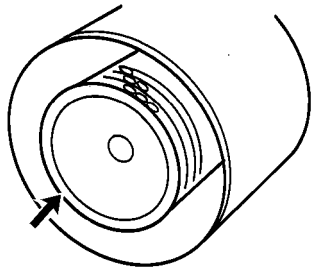

Illustration 182 g00470240

5. Remove the secondary filter element. Pull out in order to remove the element.

6. Install a new secondary filter element. Push the element firmly in order to properly seat the element. Write the date on the element, if the element is replaced.

7. Install the primary filter element and the air cleaner housing cover.

8. Close the engine access door, if equipped.

i02467841

Engine Air Precleaner - Clean

SMCS Code: 1055-070

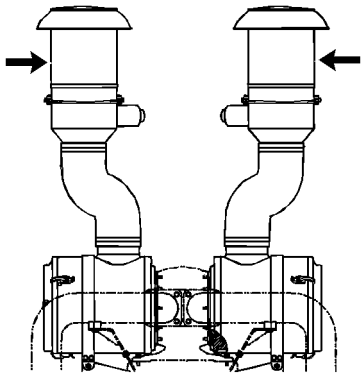

Illustration 183 g01230827

1. Inspect the air inlet screens for dirt and for trash.

2. Remove the screen. Clean the screen if the screen is dirty.

3. Inspect the precleaner tubes for dirt and for dust.

4. Clean the precleaner tube with pressure air if the precleaner tube is dirty.

NOTICE
Service the air cleaner only with the engine stopped. Engine damage could result.

Run the engine at high idle. If the engine air filter indicator still flashes, service the air cleaners. Stop the engine.

i02859690

Engine Crankcase Breather - Clean

SMCS Code: 1317-070

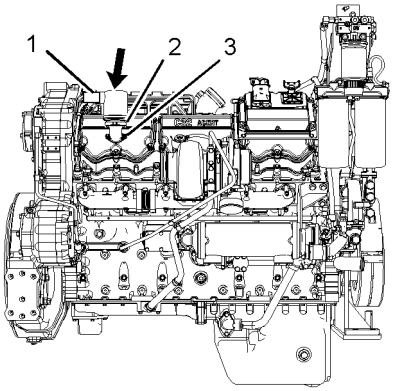

Illustration 184
g01231478
Right side view

Both of the crankcase breathers are located on the back of the engine.

1. Remove tube (1) from the outlet of the breather and loosen clamp (2).

2. Remove bolts (2) and remove the breather from the engine.

3. Check the condition of the seal. Replace the seal if the seal is damaged.

4. Remove the breather element. Wash the breather element and wash the breather in a clean nonflammable solvent.

5. Shake the breather element until the breather element is dry. You may also use pressurized air in order to dry the breather element.

6. Check the condition of the tube. Replace the tube if the tube is damaged.

7. Install the element into the breather and install the breather with bolts (3).

8. Install tube (1) onto the outlet of the breather cover and tighten clamp (2).

9. Perform steps 1 through 8 for each crankcase breather.

i02467624

Engine Mounts and Crankshaft Vibration Damper - Inspect

SMCS Code: 1152-040; 1205-040

Damage to the vibration damper or failure of the vibration damper will increase torsional vibrations. These vibrations will result in damage to the crankshaft and in damage to the other engine components. A deteriorating vibration damper will cause excessive gear train noise at variable points in the speed range.

See the Service Manual, “Engine Disassembly and Assembly” for the procedure to install a new damper.

Caterpillar recommends replacing the damper for any of the following reasons:

- The engine has had a failure because of a broken crankshaft.

The damper can be used again if none of the above conditions are found. The damper can be used if the damper is not damaged.

In the damper, a wobble can occur on the outer ring. Some of the wobble of the outer ring is normal. If a wobble is present, replacement of the damper is not necessary. You can confirm an acceptable wobble by seeing the Service Manual, “Engine Disassembly and Assembly” for the procedure to check the damper.

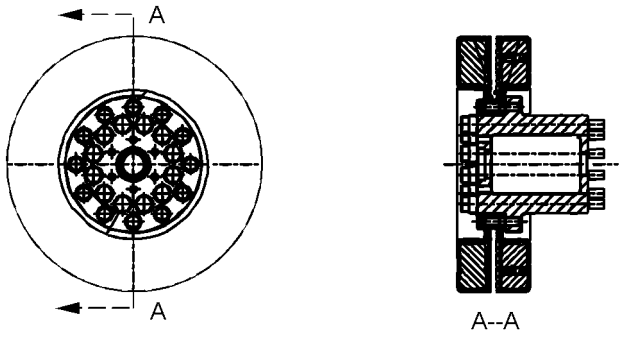

Illustration 185
g01305989

The double viscous vibration damper limits torsional vibration effectively. This C32 Acert engine uses a viscous vibration damper unlike the rubber vibration damper with alignment marks.

NOTICE
Inspect the viscous vibration damper for signs of leaking and for signs of damage to the case. Either of these conditions can cause the weight to contact the case. This contact can affect damper operation.

Also, in order to check a viscous vibration damper for another C32 Acert engine, see Service Manual, RENR9798, “Vibration Damper - Check” for typical instruction.

Note: Refer to the Service Manual, “Engine Disassembly and Assembly” for the necessary replacement procedure.

Caterpillar recommends checking the engine mounts for deterioration. This will prevent excessive engine vibration that is caused from improper mounting.

i03662420

Engine Mounts and Equalizer Bar - Inspect

SMCS Code: 1152-040; 7206-040

Engine Mounts

Caterpillar recommends checking the engine mounts for deterioration. This will prevent excessive engine vibration that is caused from improper mounting.

Equalizer Bar End Pins

WARNING

Personal injury or death can occur from not following the proper procedure or the recommended tooling.

To prevent the possibility of injury or death, follow the established procedure using the recommended tooling.

NOTICE
The machine must be parked on a level surface to perform this procedure.

WARNING

Personal injury or death can occur from not following the proper procedure or the recommended tooling.

To prevent the possibility of injury or death, follow the established procedure using the recommended tooling.

NOTICE
The machine must be parked on a level surface to perform this procedure.

Note: All the weight of the machine must be removed from the equalizer bar. Equalizer bar must have free movement in order to be measured.

To check the equalizer bar end pin for movement and unusual wear, perform the following steps.

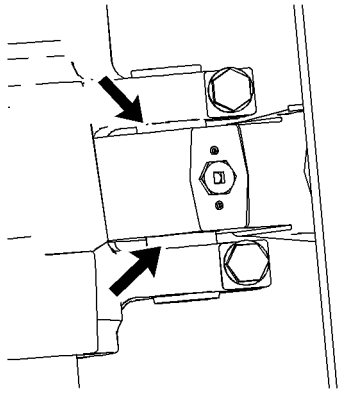

Illustration 186 g01108793

1. Clean the areas that are around the end pin with a high pressure wash. Inspect the condition of the seal.
2. Check the area for oil leakage and a neutral seal position.
3. Check the oil in both end pin joints.

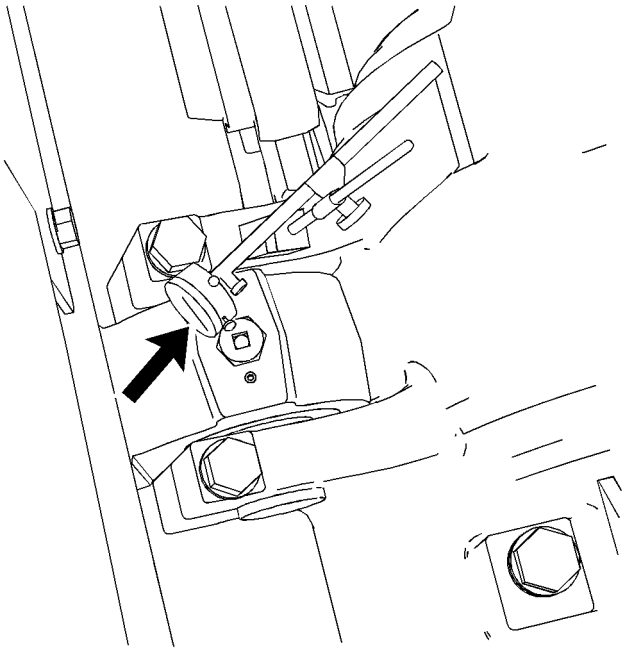

Illustration 187 g01108795

4. Position a dial indicator on the bracket for the pin on the roller frame. Set the dial indicator probe on top of the equalizer bar. Set the dial indicator to zero.

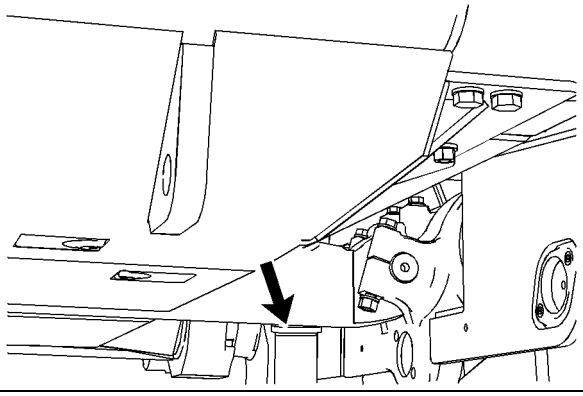

Illustration 188 g01108798

5. Put a suitable floor jack in position under the end of the equalizer bar.

6. Jack up the equalizer bar and take a reading on the dial indicator in order to determine the amount of wear.

Note: Schedule the end pin joint for repair if the reading on the dial indicator exceeds 1.50 mm (.059 inch).

7. Repeat the inspection and the measurement procedure for the other end of the equalizer bar and end pin.

Consult your Caterpillar dealer for an inspection and for repair instructions.

Equalizer Bar Center Pin

WARNING

Personal injury or death can occur from not following the proper procedure or the recommended tooling.

To prevent the possibility of injury or death, follow the established procedure using the recommended tooling.

NOTICE
The machine must be parked on a level surface to perform this procedure.

WARNING

Personal injury or death can occur from not following the proper procedure or the recommended tooling.

To prevent the possibility of injury or death, follow the established procedure using the recommended tooling.

NOTICE
The machine must be parked on a level surface to perform this procedure.

Note: All the weight of the machine must be removed from the equalizer bar. Equalizer bar must have free movement in order to be measured.

To check the equalizer bar center pin for looseness and for unusual wear, perform the following steps.

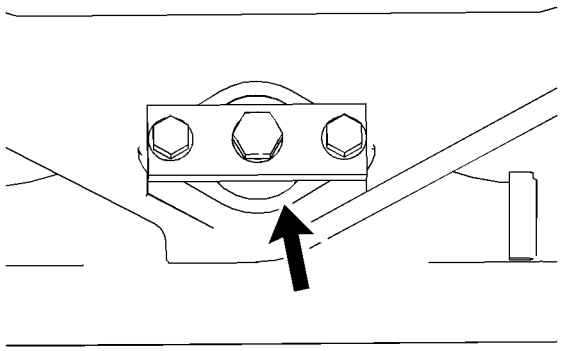

Illustration 189 g01108801

1. Clean the areas that are around the center pin and equalizer bar.

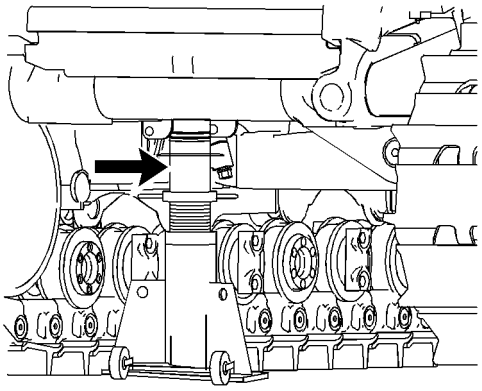

Illustration 190 g01108803

2. Put a suitable floor jack in position under the main frame, as shown.

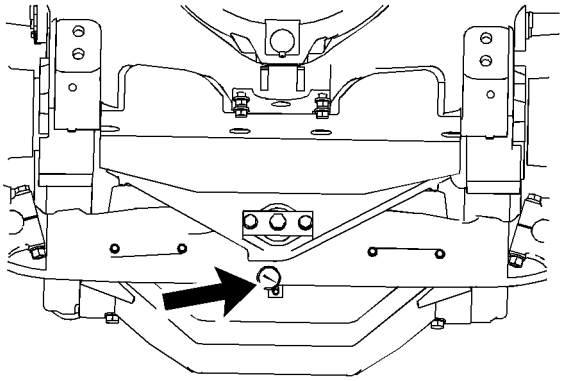

Illustration 191 g01108804

3. Position a dial indicator on the equalizer bar and place the probe of the dial indicator under the center of the frame for the pin. Set the dial indicator to zero.
4. Jack up the front of the machine until the weight of the roller frames are supported by the equalizer bar.
5. Take a reading of the dial indicator in order to determine the amount of wear on the pin and bearing.

Note: Schedule the center pin joint for repair if movement exceeds 2.54 mm (.100 inch).

Consult your Caterpillar dealer for an inspection and for repair instructions.

Equalizer Bar Pads

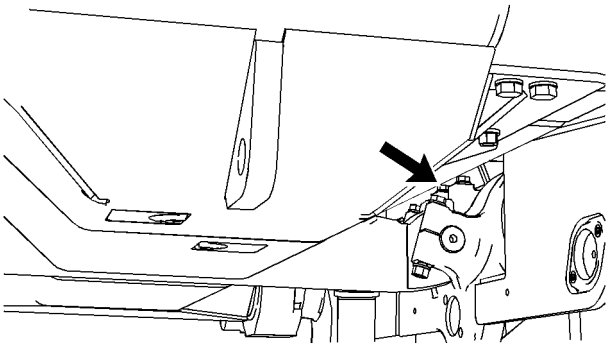

Illustration 192 g01108806

The equalizer bar pads are under the front guard, which is underneath the machine. Inspect the equalizer bar pads for cracked rubber and for missing portions of rubber. Consult your Caterpillar dealer for replacement parts and for replacement instructions.

i02859784

Engine Oil Level - Check

SMCS Code: 1302-535-FLV; 1326-535-FLV

WARNING

Hot oil and components can cause personal injury.

Do not allow hot oil or components to contact skin.

NOTICE
Do not under fill or overfill engine crankcase with oil. Either condition can cause engine damage.

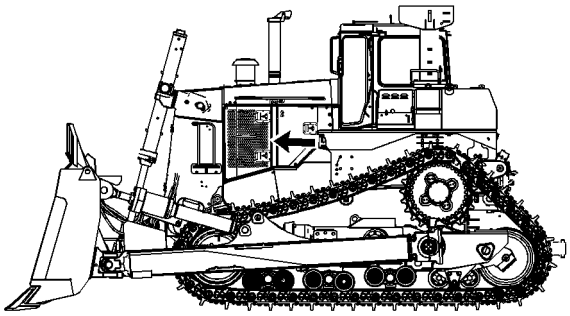

Illustration 193 g01424605

1. Open the front engine access door that is on the left side of the machine.

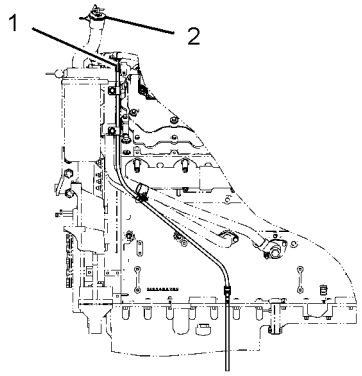

Illustration 194 g01230331

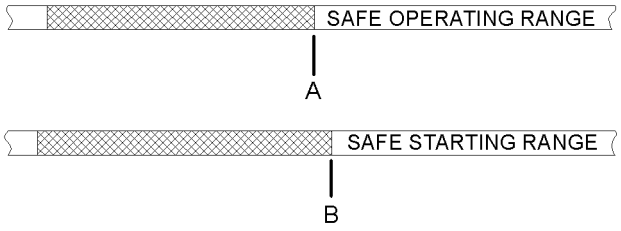

Illustration 195 g01230334

(A) Full mark at the engine running position("SAFE OPERATING RANGE")
(B) Full mark with cold engine oil ("SAFE STARTING RANGE")

2. Check the "SAFE OPERATING RANGE" side of dipstick (1) while the engine is running at low idle. The oil should be at operating temperature. Maintain the oil level to the "FULL" mark.

   Check the "SAFE STARTING RANGE" side of dipstick (1) before starting the engine when the engine oil is cold. Maintain the oil level to the "FULL" mark.

Note: When you operate the machine on severe slopes, the oil level in the engine crankcase must be in the "SAFE OPERATING RANGE" zone of the dipstick.

3. Remove oil filler cap (1). If necessary, add oil.
4. Clean the oil filler cap and install the oil filler cap.
5. Close the engine access door.

i02859782

Engine Oil Sample - Obtain

SMCS Code: 1000-008; 7542-008

WARNING

Hot oil and components can cause personal injury.

Do not allow hot oil or components to contact skin.

NOTICE

Care must be taken to ensure that fluids are contained during performance of inspection, maintenance, testing, adjusting and repair of the product. Be prepared to collect the fluid with suitable containers before opening any compartment or disassembling any component containing fluids.

Refer to Special Publication, NENG2500, "Caterpillar Dealer Service Tool Catalog" for tools and supplies suitable to collect and contain fluids on Caterpillar products.

Dispose of all fluids according to local regulations and mandates.

Obtain the sample of the engine oil as close as possible to the recommended sampling interval. The recommended sampling interval is every 250 service hours. In order to receive the full effect of S·O·S oil analysis, you must establish a consistent trend of data. In order to establish a pertinent history of data, perform consistent oil samplings that are evenly spaced.

1. Open the front engine access door that is on the left side of the machine.

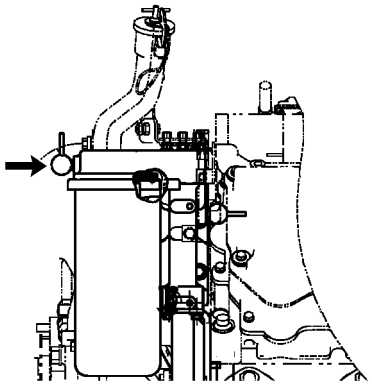

Illustration 196 g01230640

2. Remove the protective cap.

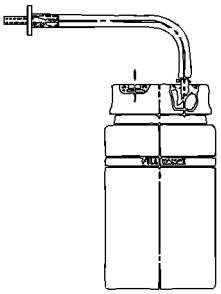

Illustration 197 g01178670

169 - 8373 Fluid Sampling Bottle

Note: Use the supplied probe and flush the fitting with oil into an approved container before obtaining oil sample.

3. Obtain a sample with 169 - 8373 Fluid Sampling Bottle.

4. After you take a sample, remove the cap with the tube and the probe from the bottle. Discard the cap with the tube and the probe. Install the sealing cap that is provided with 169 - 8373 Fluid Sampling Bottle.

5. Replace the protective cap.

6. Close the engine access door.

Refer to Operation and Maintenance Manual, “Lubricant Viscosities” for the correct fluid for your machine.

i04384279

Engine Oil and Filter - Change

SMCS Code: 1308-510; 1318-510

Selection of the Oil Change Interval

NOTICE

Care must be taken to ensure that fluids are contained during performance of inspection, maintenance, testing, adjusting, and repair of the product. Be prepared to collect the fluid with suitable containers before opening any compartment or disassembling any component containing fluids.

Refer to Special Publication, NENG2500, “Dealer Service Tool Catalog” for tools and supplies suitable to collect and contain fluids on Cat products.

Dispose of all fluids according to local regulations and mandates.

NOTICE

This machine is equipped with an engine that meets EPA Tier 2, Euro Stage III, or MOC Step 3 emission regulations. A 500 hour engine oil change interval is possible, if the following conditions are met. Acceptable operating conditions, recommended multigrade oil types, and an S·O·S oil sampling and analysis program are used. Otherwise use a 250 hour oil change interval.

If you select an interval for oil and filter change that is too long, you may damage the engine.

CAT oil filters are recommended.

Recommended multigrade oil types are listed in Table 19.

Note: Do not use API CF-4 oils in Caterpillar machines with diesel engines.

Abnormally harsh operating cycles or harsh environments can shorten the service life of the engine oil. Arctic temperatures, corrosive environments, or dusty conditions may require a reduction in engine oil change intervals from the recommendations in Table 19. Also refer to Manual, SEBU5898, “Cold Weather Recommendations for all Caterpillar Machines”. Poor maintenance of air filters or of fuel filters requires reduced oil change intervals. See your Cat dealer for more information if this product will experience abnormally harsh operating cycles or harsh environments.

Table 19

D11T Series Engine Oil Change Interval[1]				
Multigrade Oil Type	Operating Conditions			
	Standard [1]	Extended [1]	Severe	
			Fuel Sulfur above 0.3% [2]	Altitude above 1830 m (6000 ft)
Cat DEO Preferred	250 hr	500 hr	250 hr	250 hr[3]
ECF-2 Preferred	250 hr	500 hr	250 hr	250 hr
ECF-1-a	250 hr	250 hr	150 hr[3]	250 hr[3]

(1) The standard oil change interval for engines is 250 hours. The extended oil change interval in this machine is 500 hours if the following conditions are met. Acceptable operating conditions, recommended oil types, and an S·O·S oil sampling and analysis program are used. This extended interval is not permitted for other machines. Refer to the applicable Operation and Maintenance Manuals for the other machines.
(2) For sulfur content above 0.1%, refer to this topic in the Manual, SEBU6250, “Caterpillar Machine Fluid Recommendations”.
(3) Use “Program B” below to determine an appropriate interval.

Adjustment of the Oil Change Interval

Note: Your Cat dealer has additional information on these programs.

Program B

Optimizing Oil Change Intervals

Begin with a standard oil change interval. The oil change intervals are adjusted by increments. Each interval is adjusted an additional 50 hours. Periodic oil sampling and analysis are done during each interval. The analysis includes oil viscosity and infrared (IR) analysis of the oil. Repeat Program B if you change the application of the machine.

If an oil sample does not pass the analysis, shorten the oil change interval.

References

Reference: Form, PEDP7035, “Optimizing Oil Change Intervals”

Reference: Form, PEDP7036, “S·O·S Fluid Analysis”

Reference: Form, PEHP7076, “Understanding the S·O·S Oil Analysis Tests”

Procedure for Changing the Engine Oil and Filter

WARNING

Hot oil and components can cause personal injury.

Do not allow hot oil or components to contact skin.

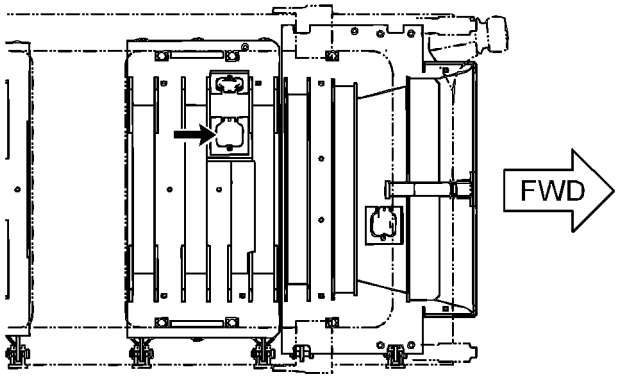

Illustration 198 g01178832

Top view

1. Open the crankcase drain access cover, which is in the crankcase guard.

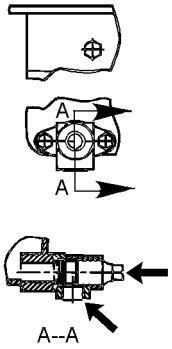

Illustration 199 g01178839

2. Remove the crankcase drain plug. Open the drain valve. Allow the oil to drain into a suitable container. A drain hose may be attached to the drain valve to aid in draining.

3. When the oil has completed draining from the crankcase, close the drain valve. Install the crankcase drain plug. Close the crankcase drain access cover.

4. Open the engine access cover on the left side of the machine.

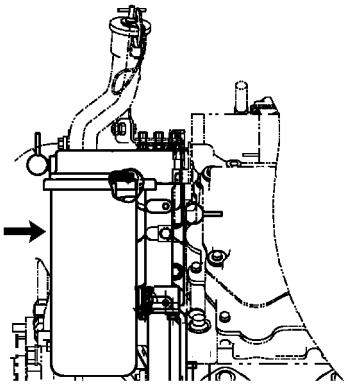

Illustration 200 g01230617
Left side view

5. Remove the engine oil filter elements from the front left side of the engine. Discard the engine oil filter element properly. Make sure that all of the old filter seal is removed from the filter base.

6. Apply a thin coat of oil to the seal on the new filter. Install the new engine oil filter element by hand.

Note: Instructions for the installation of the filters are printed on the side of each Caterpillar spin-on filter. For non-Caterpillar filters, refer to the installation instructions that are provided by the supplier of the filter.

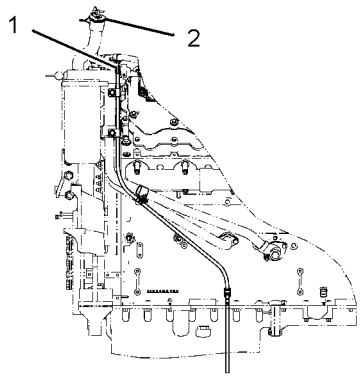

Illustration 201 g01230331

7. Remove the oil filler cap (2). Fill the crankcase with new oil. See Operation and Maintenance Manual, “Capacities (Refill)”. Clean the oil filler cap and install the oil filler cap.

8. Always measure the oil level with dipstick (1) in order to ensure that the correct amount of oil was added.

9. On the dipstick, always maintain the oil level in the “SAFE OPERATING RANGE” zone.

   Reference: See Operation and Maintenance Manual, “Engine Oil Level - Check”.

10. Close the engine access door.

i04715529

Engine Valve Lash - Check/Adjust

SMCS Code: 1102-025

WARNING

To prevent possible injury, do not use the starter motor to turn the flywheel.

Hot engine components can cause burns. Allow additional time for the engine to cool before measuring valve clearance.

Initial wear and seating of valve train components require an initial valve lash adjustment. Initial valve lash adjustment for new engines and for rebuilt engines is scheduled at the First 500 Service Hours. “Engine Oil and Filter - Change” should also be performed at that time.

Subsequent valve lash checks and adjustments are scheduled for Every 4000 Service Hours.

Check the valve bridge before setting the valve lash. Ensure that the valve bridge is seated equally on both valve stems. Adjust the valve bridge before setting the valve lash.

NOTICE
Operation of Caterpillar engines with improper valve adjustments will reduce engine efficiency. This reduced efficiency could result in excessive fuel usage and/or shortened engine component life.

WARNING

Electrical shock hazard. The electronic unit injector system uses 90-120 volts.

NOTICE
Measure the valve clearance with the engine stopped. To obtain an accurate measurement, allow at least 20 minutes for the valves to cool to engine cylinder head and engine block temperature.

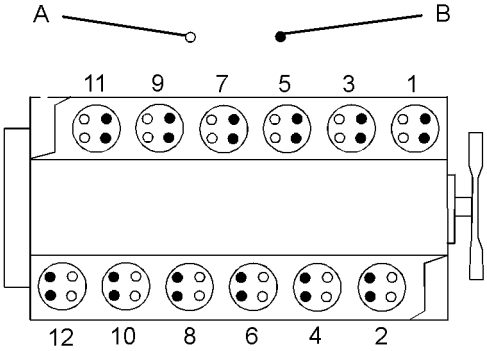

Illustration 202 g02819956

(A) Inlet Valves
(B) Exhaust Valves

An adjustment is not required if the valve clearance settings are within ± 0.08 mm (± .003 inch) of the nominal clearance. Set the clearance that is given in the chart if the clearance is not within the limits.

Table 20

VALVE CLEARANCE SETTING CHART	
Inlet Valve	0.38 mm (0.015 inch)
Exhaust Valve	0.76 mm (0.030 inch)

Refer to your machine Service Manual or your Cat dealer for the complete valve adjustment procedure.

i03952000

Engine Valve Rotators - Inspect

SMCS Code: 1109-040

WARNING

When inspecting the valve rotators, protective glasses or face shield and protective clothing must be worn, to prevent being burned by hot oil or spray.

Caterpillar recommends replacing valve rotators that are operating improperly. An improperly operating valve rotator will shorten valve life because of accelerated wear on the valves. Also, metal particles from a damaged valve rotator could fall into the cylinder and damage to the piston head and to the cylinder head may result.

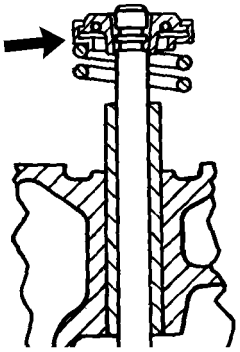

Illustration 203 g00882731

Start the engine and run the engine at low idle. Watch the top surface of each valve rotator. Whenever an inlet valve closes or an exhaust valve closes, each valve rotator should turn.

If a valve rotator fails to turn, consult your Cat dealer for service.

i02858027

Equalizer Bar End Pins Oil Level - Check

SMCS Code: 7206-535-FLV

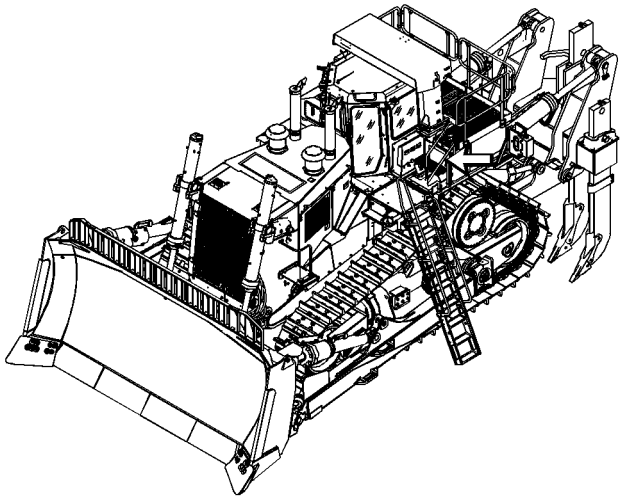

Illustration 204 g01424066

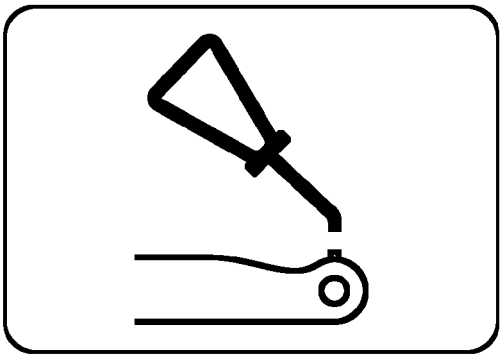

Illustration 205 g01300275

Instruction film on front of the lubricant reservoir for the equalizer bar

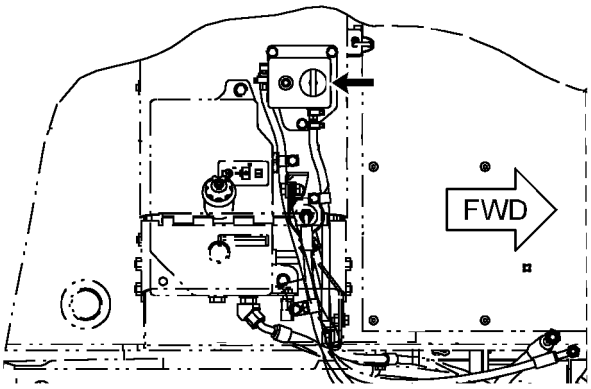

Illustration 206 g01300316

Top view

The lubricant reservoir is located outside of the cab in a compartment on the left side of the machine. The reservoir is near the refrigerant dryer.

Remove the oil filler cap with the tee handle in order to add the oil to the lubricant reservoir.

Note: If one side of the reservoir is lower than the other side, maintenance of the equalizer bar is required.

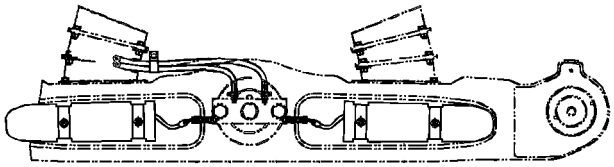

Illustration 207 g01300294

Rear view of lubrication oil lines for the equalizer bar

i02858067

Ether Starting Aid Cylinder - Replace

SMCS Code: 1456-510-CD

WARNING

Breathing ether vapors or repeated contact of ether with skin can cause personal injury. Personal injury may occur from failure to adhere to the following procedures.

Use ether only in well ventilated areas.

Do not smoke while changing ether cylinders.

Use ether with care to avoid fires.

Do not store replacement ether cylinders in living areas or in the operator's compartment.

Do not store ether cylinders in direct sunlight or at temperatures above 49 °C (120 °F).

Discard cylinders in a safe place. Do not puncture or burn cylinders.

Keep ether cylinders out of the reach of unauthorized personnel.

To avoid possible injury, be sure the brakes are applied and all controls are in Hold or Neutral when starting the engine.

1. Open the rear engine access door on the right side of the machine. The ether starting aid is located on the front side of the fender and the crossbeam.

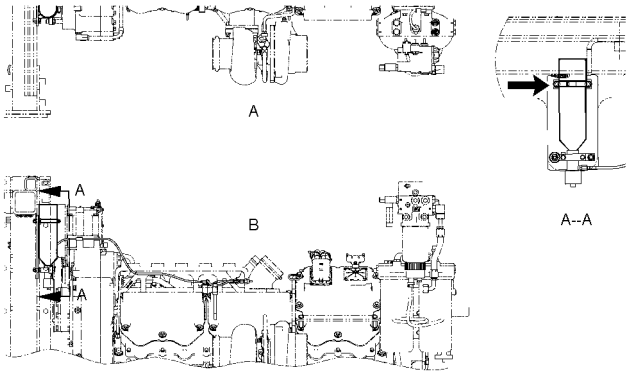

Illustration 208 g01230226

(A) Top view
(B) Right side view
(A-A) Front view

2. Loosen the cylinder retaining clamp. Unscrew the empty ether starting aid cylinder and remove the empty ether starting aid cylinder.

3. Remove the used gasket. Install the new gasket that is provided with each new ether starting aid cylinder.

4. Install the new ether starting aid cylinder. Tighten the ether starting aid cylinder by hand. Tighten the cylinder retaining clamp securely.

5. Close the engine access door.

i03794750

Final Drive Oil - Change

SMCS Code: 4050-044-FLV

WARNING

Hot oil and components can cause personal injury.

Do not allow hot oil or components to contact skin.

NOTICE

Care must be taken to ensure that fluids are contained during performance of inspection, maintenance, testing, adjusting and repair of the product. Be prepared to collect the fluid with suitable containers before opening any compartment or disassembling any component containing fluids.

Refer to Special Publication, NENG2500, “Caterpillar Dealer Service Tool Catalog” for tools and supplies suitable to collect and contain fluids on Caterpillar products.

Dispose of all fluids according to local regulations and mandates.

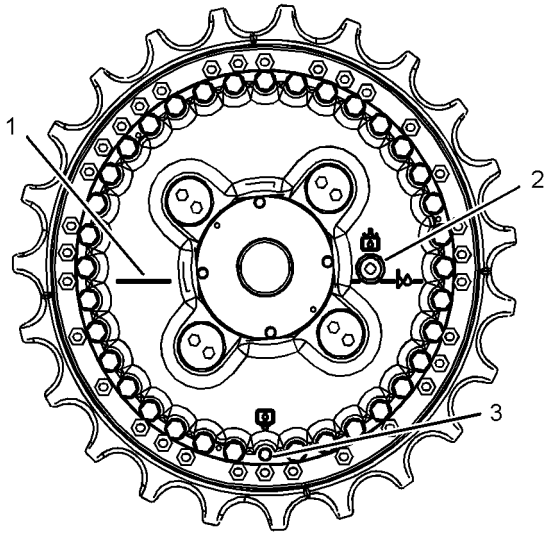

Illustration 209 g02051933

1. Position one final drive so that oil level mark (1) is horizontal. Drain plug (3) will point downward.

2. Remove drain plug (3). Take an SOS sample. Allow the oil to drain into a suitable container.

3. Inspect the drain plug seal. Replace the drain plug seal if the drain plug seal is damaged.

4. Clean the drain plug and install the drain plug.

5. Remove oil filler plug (2).

6. **The recommended oil for most machine applications is SAE 60.** Fill the final drive with oil to the bottom of the filler plug opening. See Operation and Maintenance Manual, “Capacities (Refill)”.

7. Inspect the condition of the seal of the filler plug. Replace the plug seal if the plug seal is damaged.

8. Clean the filler plug and install the filler plug.

9. Repeat Step 1 to Step 8 in order to change the oil in the other final drive.

i03795719

Final Drive Oil Level - Check

SMCS Code: 4050-535-FLV

WARNING

Hot oil and components can cause personal injury.

Do not allow hot oil or components to contact skin.

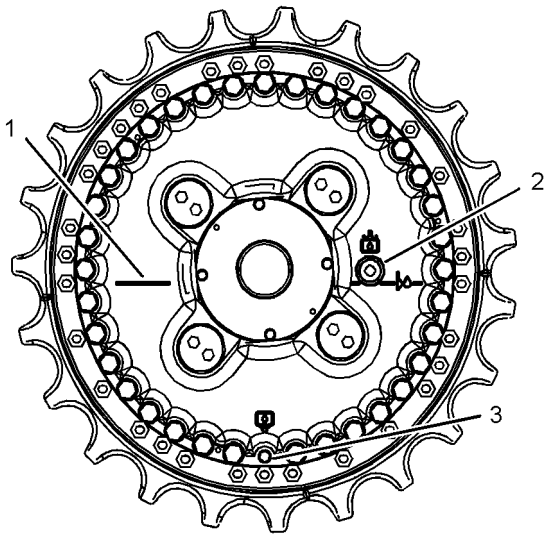

Illustration 210 g02051933

1. Position one final drive so that oil level mark (1) is horizontal. The drain plug (3) will point downward.

2. Remove oil filler plug (2).

3. The oil level should be at the bottom of the filler plug opening. Add oil, if necessary.

4. Wipe the magnet in order to clean the plug.

5. Install oil filler plug (2).

6. Repeat Step 1 to Step 5 in order to check the oil level in the other final drive.

i03795729

Final Drive Oil Sample - Obtain

SMCS Code: 3258-008; 4050-008; 7542-008

WARNING

Hot oil and components can cause personal injury.

Do not allow hot oil or components to contact skin.

NOTICE

Care must be taken to ensure that fluids are contained during performance of inspection, maintenance, testing, adjusting and repair of the product. Be prepared to collect the fluid with suitable containers before opening any compartment or disassembling any component containing fluids.

Refer to Special Publication, NENG2500, “Caterpillar Dealer Service Tool Catalog” for tools and supplies suitable to collect and contain fluids on Caterpillar products.

Dispose of all fluids according to local regulations and mandates.

Obtain the sample of the differential and final drive oil as close as possible to the recommended sampling interval. The recommended sampling interval is every 250 service hours. In order to receive the full effect of S·O·S oil analysis, you must establish a consistent trend of data.

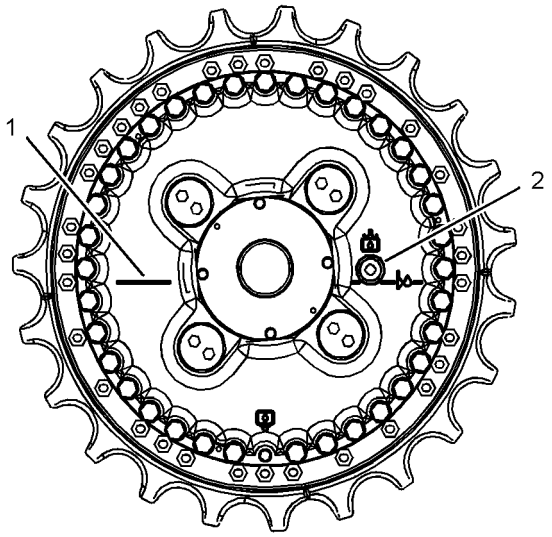

Illustration 211 g02052634

Oil sampling

1. Position one final drive so that oil level mark (1) is horizontal.

2. Remove oil filler plug (2) and obtain the oil sample with a proper suction device. Use 1U-5718 Vacuum Pump to take the oil sample.

3. Install oil filler plug (2).

4. Repeat Step 1 to Step 3 in order to sample the oil in the other final drive.

i04713076

Frame - Inspect

SMCS Code: 7051-040

Reference: See Special Instruction, REHS5390, “Inspection Procedure for Certain D11R and D11T Track-Type Tractor Main Frames” for the information on this procedure.

i04666910

Fuel Lines - Replace (Low Pressure)

SMCS Code: 1274

NOTICE

Care must be taken to ensure that fluids are contained during performance of inspection, maintenance, testing, adjusting, and repair of the product. Be prepared to collect the fluid with suitable containers before opening any compartment or disassembling any component containing fluids.

Refer to Special Publication, NENG2500, “Dealer Service Tool Catalog” for tools and supplies suitable to collect and contain fluids on Cat products.

Dispose of all fluids according to local regulations and mandates.

Replace Nonmetallic Fuel Lines

Make sure to replace the nonmetallic fuel lines and the rubber grommets at 6000 service hours.

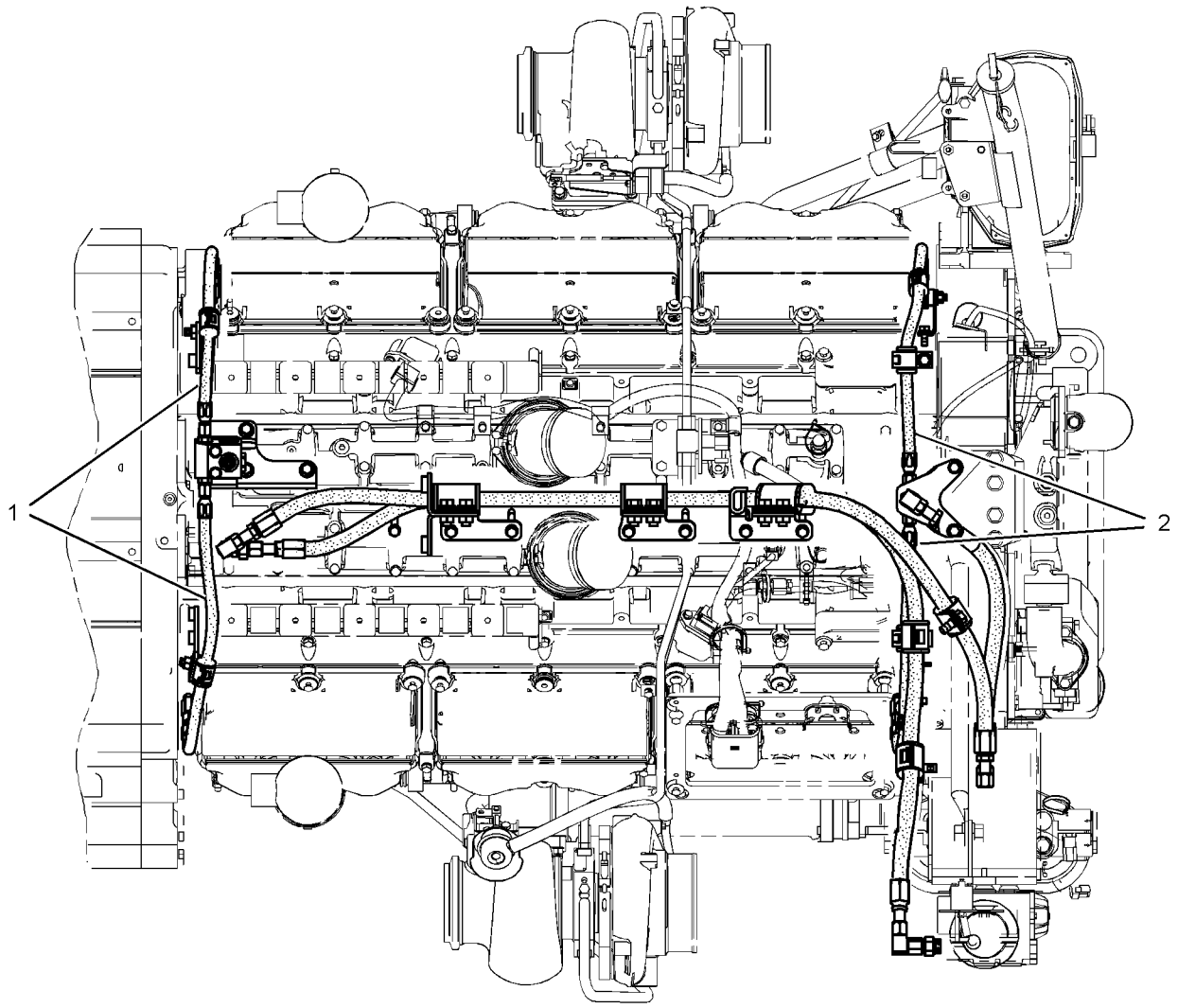

TOP VIEW OF ENGINE

Illustration 212
Top view of engine

g02141035

NOTICE
Keep all parts clean from contaminants.

Contaminants may cause rapid wear and shortened component life.

1. Remove the two rear low-pressure fuel lines (1) and install new fuel lines and rubber grommets.

2. Remove the front two low-pressure fuel lines (2) and install new fuel lines and rubber grommets.

   Reference: Refer to the Engine Disassembly and Assembly for information on removing and installing the fuel lines.

Note: Make sure that the hoses do not contact nearby components. Contact with other surfaces will produce chafing that could lead to a leak. A properly installed hose will contact only the hose clips.

Note: Do not use HIS information to fabricate the low pressure fuel lines. These hoses must be purchased from your Cat Dealer as complete assemblies.

i02858094

Fuel System - Prime

SMCS Code: 1250-548; 1258-548

If the engine does not start, air may be trapped in the fuel lines to the engine. Use the following procedure in order to purge air from the fuel lines.

Electric Fuel Priming Pump

NOTICE
Use a suitable container to catch any fuel that might spill. Clean up any spilled fuel immediately.

NOTICE
Do not allow dirt to enter the fuel system. Thoroughly clean the area around a fuel system component that will be disconnected. Fit a suitable cover over disconnected fuel system component.

1. Park the machine on a level surface. Engage the parking brake. Turn the ignition switch to the “OFF” position.

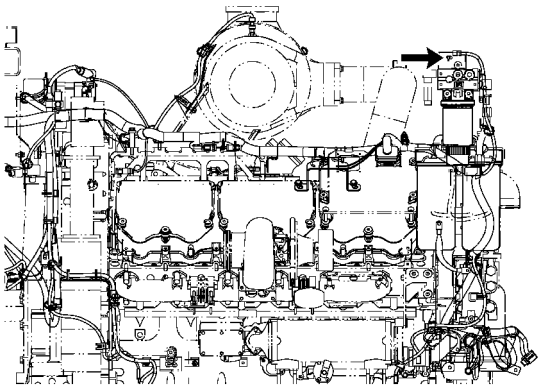

Illustration 213 g01230304

2. Open the front engine access door on the right side of the machine. Locate the switch for the fuel priming pump above the primary fuel filter.

3. Move the switch for the electric fuel priming pump to the ON position. Operate the fuel priming pump enough to fill the fuel lines and the fuel filters with fuel before turning “OFF”.

Note: As the air is purged from the fuel system, fuel pressure will increase. Listen for the priming pump to come under load. Continue priming the fuel system until the pump is under load.

4. Return the switch for the fuel priming pump to the OFF position.

NOTICE
Do not crank the engine continuously for more than 30 seconds. Allow the starting motor to cool for two minutes before cranking the engine again.

5. Start the engine. If you cannot start the engine, the engine needs more priming. If the engine continues to misfire or to smoke, more priming is necessary.

Note: The electric fuel priming pump will only operate if the engine start switch key is in the OFF position. Shut off the engine before any additional priming.

6. Run the engine at the LOW IDLE position until the engine runs smoothly.

7. Close the engine access door.

Reference: If the engine does not start after several attempts, consult your Caterpillar dealer.

i02858104

Fuel System Primary Filter (Water Separator) - Drain

SMCS Code: 1263-543

WARNING

Fuel leaked or spilled onto hot surfaces or electrical components can cause a fire. To help prevent possible injury, turn the start switch off when changing fuel filters or water separator elements. Clean up fuel spills immediately.

NOTICE
Care must be taken to ensure that fluids are contained during performance of inspection, maintenance, testing, adjusting and repair of the product. Be prepared to collect the fluid with suitable containers before opening any compartment or disassembling any component containing fluids.

Refer to Special Publication, NENG2500, “Caterpillar Dealer Service Tool Catalog” for tools and supplies suitable to collect and contain fluids on Caterpillar products.

Dispose of all fluids according to local regulations and mandates.

NOTICE
Do not allow dirt to enter the fuel system. Thoroughly clean the area around a fuel system component that will be disconnected. Fit a suitable cover over disconnected fuel system component.

The fuel system water separator is located on the front right side of the engine.

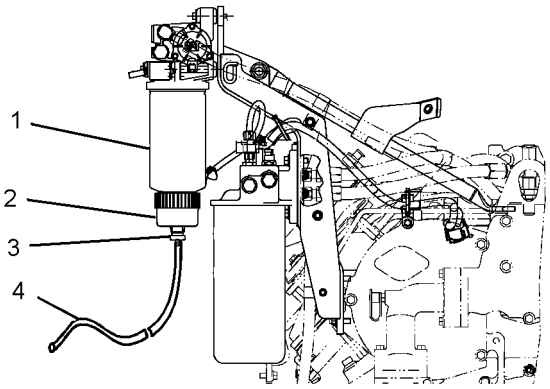

Illustration 214 g01424117

Front view

(1) Primary filter element
(2) Water separator bowl
(3) Drain valve
(4) Drain hose

Water separator bowl (2) should be monitored daily for signs of water. If water is present, drain the water from the bowl.

1. Open the right engine access door.
2. Place drain hose (4) on the outside of the machine.
3. Open drain valve (3). The drain is a self-ventilated drain. Catch the draining water in a suitable container. Dispose of the water properly.
4. Close drain valve (3).
5. Reposition drain hose (4).
6. Close the engine access door.

NOTICE
The water separator is under suction during normal engine operation. Ensure that the drain valve is tightened securely to help prevent air from entering the fuel system.

i02859697

Fuel System Primary Filter - Clean/Replace

SMCS Code: 1260-070-PY; 1260-510-PY

WARNING

Personal injury can result from air pressure.

Personal injury can result without following proper procedure. When using pressure air, wear a protective face shield and protective clothing.

Maximum air pressure at the nozzle must be less than 205 kPa (30 psi) for cleaning purposes.

WARNING

Personal injury or death can result from engine overspeed.

If the engine overspeeds, it can cause injury or parts damage.

Be prepared to stop the engine by closing the air off to the air inlets or by manually pushing downward on the governor shutdown rod.

WARNING

Personal injury or death can result from a fire.

Fuel leaked or spilled onto hot surfaces or electrical components can cause a fire.

Clean up all leaked or spilled fuel. Do not smoke while working on the fuel system.

Turn the disconnect switch OFF or disconnect the battery when changing fuel filters.

NOTICE
Do not fill fuel filter with fuel before installing the fuel filter. Contaminated fuel causes accelerated wear to fuel system parts.

NOTICE

Care must be taken to ensure that fluids are contained during performance of inspection, maintenance, testing, adjusting and repair of the product. Be prepared to collect the fluid with suitable containers before opening any compartment or disassembling any component containing fluids.

Refer to Special Publication, NENG2500, “Caterpillar Dealer Service Tool Catalog” for tools and supplies suitable to collect and contain fluids on Caterpillar products.

Dispose of all fluids according to local regulations and mandates.

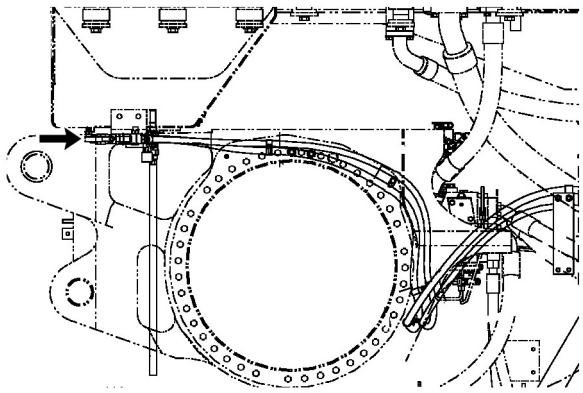

Illustration 215 g01164665

1. Turn the red handle of the fuel shutoff valve in order to shut off the fuel supply. The red handle is below the fuel tank.

2. Open the access cover for the engine compartment. The access cover is located on the right side of the machine.

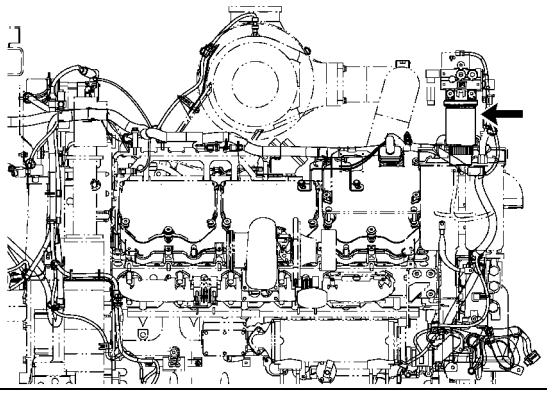

Illustration 216 g01229877

3. Loosen the retaining bolt for the filter housing case.

4. Remove the filter with a strap wrench. Remove the case and remove the element from the case.

5. Clean the filter mounting base with clean, nonflammable solvent. Make sure that all of the old seal is removed.

6. Coat the seal of the new filter element with clean diesel fuel.

7. Install the new filter element by hand.

   Instructions for the installation of the filters are printed on the side of each Caterpillar spin-on filter. For non-Caterpillar filters, refer to the installation instructions that are provided by the supplier of the filter.

8. Open the fuel shutoff valve.

9. Prime the fuel system.

   Reference: Refer to Operation and Maintenance Manual, “Fuel System - Prime” for more information.

i02857909

Fuel System Secondary Filter - Replace

SMCS Code: 1261-510-SE

WARNING

Personal injury can result from air pressure.

Personal injury can result without following proper procedure. When using pressure air, wear a protective face shield and protective clothing.

Maximum air pressure at the nozzle must be less than 205 kPa (30 psi) for cleaning purposes.

WARNING

Personal injury can result when using cleaner solvents.

To help prevent personal injury, follow the instructions and warnings on the cleaner solvent container before using.

WARNING

Personal injury or death can result from a fire.

Fuel leaked or spilled onto hot surfaces or electrical components can cause a fire.

Clean up all leaked or spilled fuel. Do not smoke while working on the fuel system.

Turn the disconnect switch OFF or disconnect the battery when changing fuel filters.

NOTICE

Do not fill fuel filters with fuel before installing them. Contaminated fuel will cause accelerated wear to fuel system parts.

NOTICE

Care must be taken to ensure that fluids are contained during performance of inspection, maintenance, testing, adjusting and repair of the product. Be prepared to collect the fluid with suitable containers before opening any compartment or disassembling any component containing fluids.

Refer to Special Publication, NENG2500, “Caterpillar Dealer Service Tool Catalog” for tools and supplies suitable to collect and contain fluids on Caterpillar products.

Dispose of all fluids according to local regulations and mandates.

Observe the pressure indicator on the dash for the fuel filters. If the filters are plugged, replace the secondary fuel filter elements.

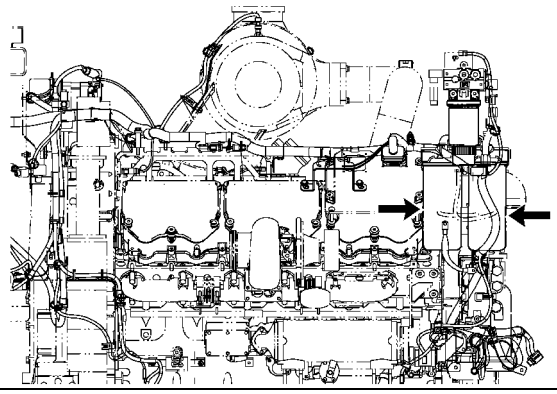

Illustration 217 g01230294

Before you replace the secondary fuel filter elements, clean the primary fuel filter element.

The secondary fuel filters are behind the front engine access door on the right side of the machine.

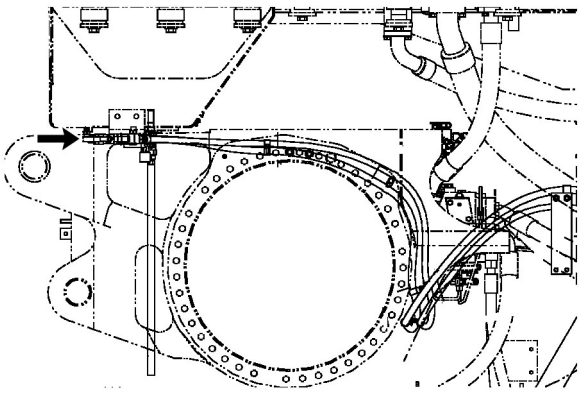

Illustration 218 g01164665

1. Shut off the fuel supply. The fuel shutoff valve with the red handle is under the fuel tank on the rear of the machine.

2. Remove the filter elements. Discard the filter elements properly.

3. Clean the filter housing base. Make sure that all of the old seal is removed.

4. Coat the seal of the new filter elements with clean diesel fuel.

5. Install the new filter elements by hand.

   Instructions for the installation of the filters are printed on the side of each Caterpillar spin-on filter. For non-Caterpillar filters, refer to the installation instructions that are provided by the supplier of the filter.

6. Open the fuel shutoff valve.

7. Prime the fuel system.

   Reference: See Operation and Maintenance Manual, “Fuel System - Prime” for more information.

i02859700

Fuel Tank Cap Filter and Strainer - Replace/Clean

SMCS Code: 1273-070-Z2; 1273-070-STR

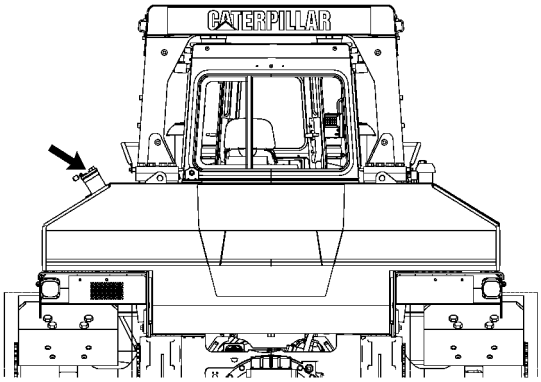

Illustration 219 g01181726

The fuel cap is on the rear of the machine. The cap is on the left side of the machine. Only vented fuel caps have filters.

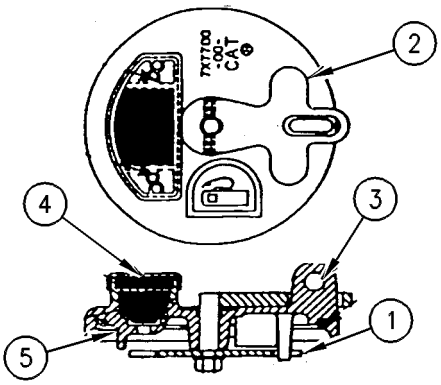

Illustration 220 g00103986

1. Lift lever (2) in order to remove the fuel tank filler cap. Turn the lever counterclockwise until the lever stops. Lift the cap straight up in order to remove the cap.

2. In order to remove the fuel strainer, lift the fuel strainer upward.

3. In order to replace the filter assembly, remove two screws that secure filter assembly (4) to the fuel cap. Remove filter assembly (4), valve (5), and the gaskets.

4. Wash the cap and the strainer in a clean, nonflammable solvent.

5. Inspect the tank cap seal. If the seal is damaged, replace the seal.

6. Replace the filter assembly, the valve, the gaskets, and the screws. Use a 9X-2205 Cap Filter Kit.

7. Install the fuel cap. Rotate the fuel cap clockwise until three tabs (1) drop into the slots in the adapter. Rotate lever (2) clockwise until the lever stops. Lower lever (2) over locking tab (3).

i02333657

Fuel Tank Water and Sediment - Drain

SMCS Code: 1273-543-M&S

NOTICE

Care must be taken to ensure that fluids are contained during performance of inspection, maintenance, testing, adjusting and repair of the product. Be prepared to collect the fluid with suitable containers before opening any compartment or disassembling any component containing fluids.

Refer to Special Publication, NENG2500, “Caterpillar Tools and Shop Products Guide” for tools and supplies suitable to collect and contain fluids on Caterpillar products.

Dispose of all fluids according to local regulations and mandates.

The drain valve is under the fuel tank at the rear of the machine.

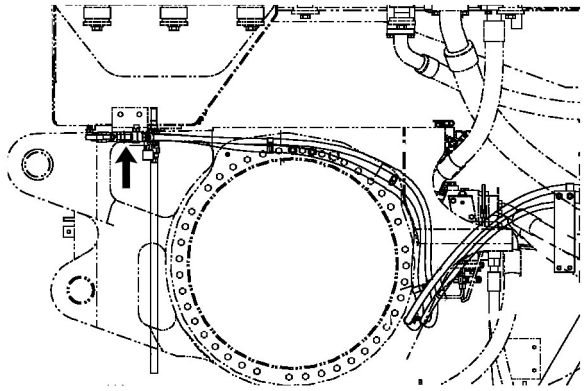

Illustration 221 g01164831

1. Open the drain valve with the yellow handle. Use the drain tube and allow the water and the sediment to drain into a suitable container.

2. Close the drain valve.

i04543336

Fuses and Circuit Breakers - Replace/Reset

SMCS Code: 1417-510; 1420

Fuses – These fuses protect the electrical system from damage that is caused by overloaded circuits. Replace a fuse if the element separates. The circuit should be checked and repaired if the element separates with a new fuse. The fuses are in the operator compartment.

NOTICE

Replace the fuses with the same type and size only. Otherwise, electrical damage can result.

If it is necessary to replace fuses frequently, an electrical problem may exist. Contact your Caterpillar dealer

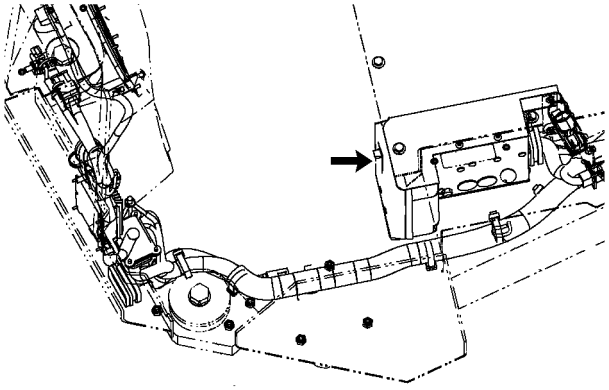

Illustration 222 g01167486

The fuse panel is beneath the access cover under the left armrest of the operator seat.

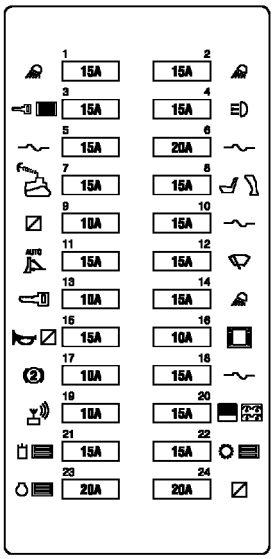

Illustration 223 g01299895

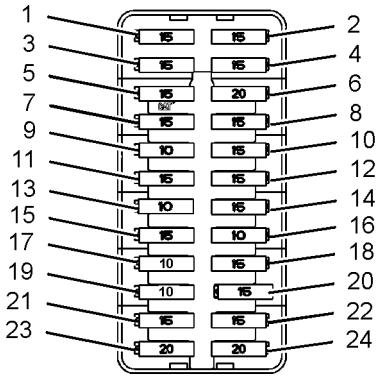

Illustration 224 g01402436

Open fuse Panel

ROPS floodlights (1) – 15 Amp

Ripper Floodlights (2) (Cylinder) – 15 Amp

ECM engine monitoring (3) (Power train ECM) – 15 Amp

Rear ROPS floodlights (4) – 15 Amp

Auxiliary (5) – 15 Amp

Spare 1 (6) – 20 Amp

GPS/Radio Transmission Antenna (7) – 15 Amp

Seat (8) (Ripper or Implements) – 15 Amp

Standard Converter (9) – 10 Amp

Spare 2 (10) – 15 Amp

“Accugrade” (11) – 15 Amp

Wipers (12) – 15 Amp

Ignition Key (13) – 10 Amp

Fender Floodlights (14) – 15 Amp

Horn (15) – 15 Amp

Navigator (16) (“SV270”) – 10 Amp

Secondary Brake (17) – 10 Amp

Unswitched Auxiliary (18) – 15 Amp

Product Link (19) – 10 Amp

Advisor Panel (20) – 15 Amp

Implement ECM (21) – 15 Amp

Power train ECM (22) – 15 Amp

Engine ECM (23) – 20 Amp

24 VA − 12 VA Converter (20) (Attachment) – 20 Amp

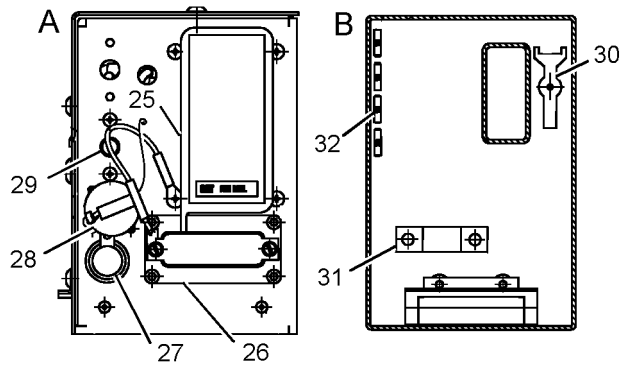

Illustration 225 g01167541

(A) Front cover
(B) Inside cover

Cover (25) – Fuse block

Fuse cover (26) – Plastic

Power outlet (27) – 12 V

Service Port (28) – Connector

HVAC blower (29) (Reset button) – 15 Amp

Fuse Puller (30) – Auto Stop

Fuse (31) – 175 Amp

Fuses (32) – Extra fuses

Circuit Breaker (Reset)

The circuit breaker for the HVAC blower (29) is behind the access cover under the left armrest of the operator seat. See illustration 225.

Circuit Breaker/Reset (29) – Push in the button in order to reset the circuit breaker. If the electrical system is working properly, the button will remain depressed. If the button does not remain depressed, check the appropriate electrical circuit. Repair the electrical circuit, if necessary.

i02861187

High Intensity Discharge Lamp (HID) - Replace

SMCS Code: 1434-510

WARNING

HID lamps operate at very high voltages. To avoid electrical shock and personal injury, disconnect power before servicing HID lamps.

WARNING

HID bulbs become very hot during operation. Before servicing, remove power from lamp for at least five minutes to ensure lamp is cool.

NOTICE

Although HID bulb materials may change over time, HID bulbs produced at the time of the printing of this manual contain mercury. When disposing of this component, or any waste that contains mercury, please use caution and comply with any applicable laws.

1. Remove the electrical power from the high intensity discharge lamp (HID). The electrical power must be removed from the HID lamp for at least five minutes, in order to ensure that the bulb is cool.

2. Disassemble the housing for the HID lamp in order to have access to the bulb.

Note: On some HID lamps, the bulb is an integral part of the lens assembly. The bulb is not removed separately from the lens assembly. Replace the entire lens assembly on these HID lamps.

3. Remove the bulb from the HID lamp.

4. Install the replacement bulb in the HID lamp.

If the bulb is an integral part of the lens assembly, install the replacement lens assembly in the HID lamp.

Note: In order to avoid failure to the bulb that is premature, avoid touching the bulb's surface with your bare hands. Clean any fingerprints from the bulb with alcohol prior to operation.

5. Reassemble the housing for the HID lamp. Ensure that any printing on the lens is oriented correctly with respect to the HID lamp's mounting position on the machine.

6. Reattach the electrical power to the HID lamp.

7. Check the HID lamp for proper operation.

Note: Consult your Caterpillar dealer for additional information on HID lamps.

i02054663

Horn - Test

SMCS Code: 7402-081

Test the horn on a daily basis. Press downward on the horn button in order to sound the horn. If the horn does not sound, make the necessary repairs before you operate the machine.

i03898104

Hoses and Clamps - Inspect/Replace

SMCS Code: 7554-040; 7554-510

Inspect the Hoses and the Clamps

The nonmetallic hoses and the clamps must be inspected periodically in order to ensure safe operation and continuous operation of the engine fuel system. Take proper safety precautions before inspecting or replacing hoses and clamps.

Note: Always use a board or cardboard when the engine components are checked for leaks. Leaking fluid that is under pressure can cause serious injury or possible death. This proceeding includes leaks that are the size of a pin hole. Refer to Operation and Maintenance Manual, “General Hazard Information” for more information.

Nonmetallic Fuel Lines

Note: Make sure that the hoses do not contact nearby components. Contact with other surfaces will produce chafing that could lead to a leak. A properly installed hose will contact only the hose clips.

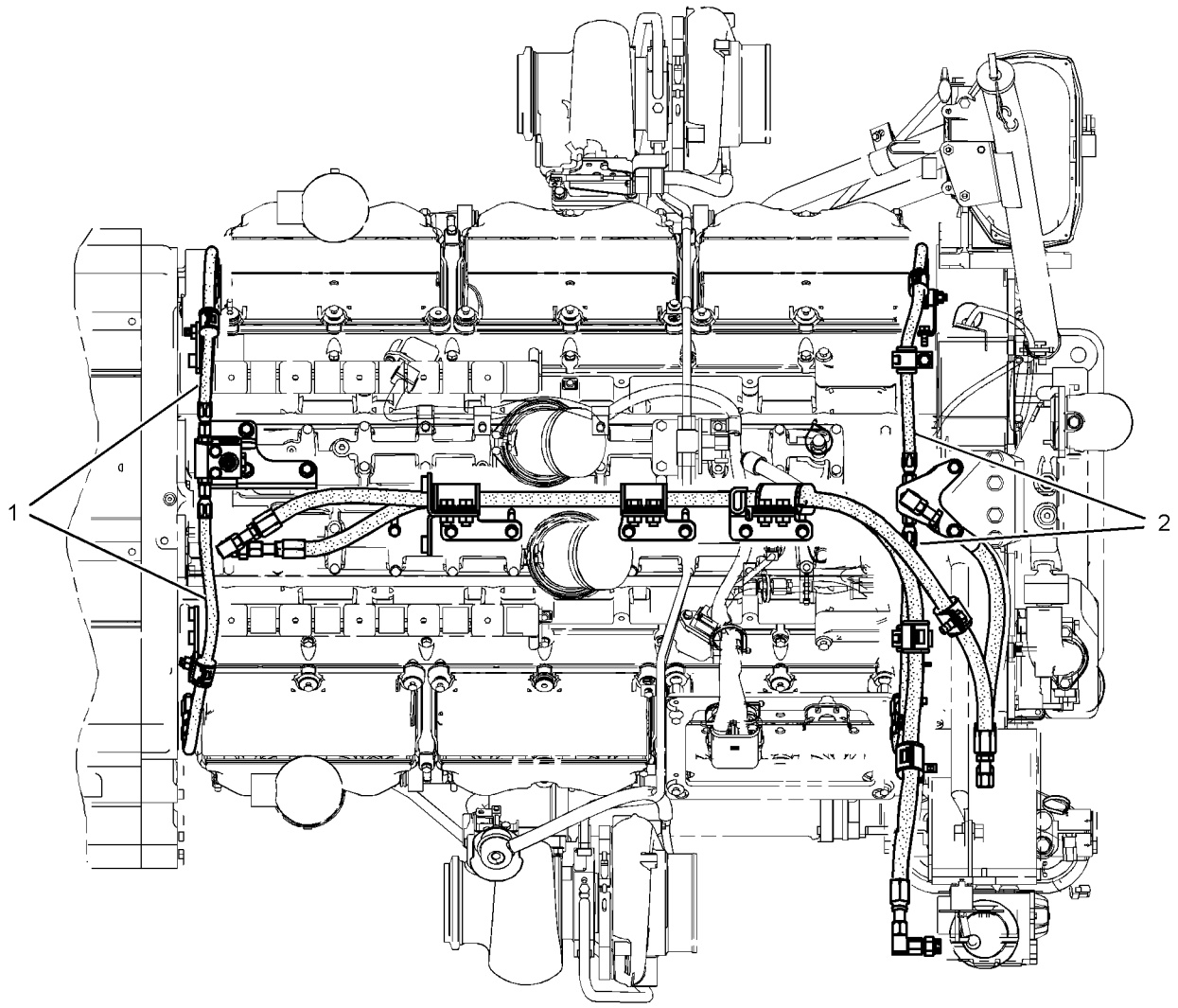

TOP VIEW OF ENGINE

Illustration 226 g02141367

(1) Rear low-pressure fuel lines (2) Front low-pressure fuel lines

Inspect hoses (1, 2) of the engine fuel system for the following conditions.

Replace any hose which exhibits any of the following conditions.

- Hoses which are cracked
- Hoses which are soft
- Outer covering that is chafed or cut
- Outer covering that is ballooning locally
- Flexible part of the hose that is kinked or crushed
- Hoses which exhibit signs of leakage which are not the result of loose couplings or clamps

Inspect all hose couplings for leaks. Replace any hose that exhibits signs of coupling leakage.

Inspect all clamps for the following conditions. Replace any parts that exhibit signs of any of the following conditions.

- Missing or damaged grommets
- Missing fasteners
- Missing clamps

Failure to replace a non-metallic fuel line (hose) which exhibits any of the above conditions may result in a leak.

Replace the Hoses and the Clamps

NOTICE

Care must be taken to ensure that fluids are contained during performance of inspection, maintenance, testing, adjusting and repair of the product. Be prepared to collect the fluid with suitable containers before opening any compartment or disassembling any component containing fluids.

Refer to Special Publication, NENG2500, “Caterpillar Dealer Service Tool Catalog” or refer to Special Publication, PECJ0003, “Caterpillar Shop Supplies and Tools Catalog” for tools and supplies suitable to collect and contain fluids on Caterpillar products.

Dispose of all fluids according to local regulations and mandates.

Reference: Refer to the Engine Disassembly and Assembly for information on removing and installing the low-pressure fuel lines.

i04384774

Hydraulic System Oil - Change

SMCS Code: 5050-044

Interval

Note: If Cat HYDO Advanced 10 hydraulic oil is used, the hydraulic oil change interval will change. The normal interval of 2000 hours is extended to 3000 hours. S·O·S Services may even extend the oil change to a longer interval. Consult your Cat dealer for details.

Cat HYDO Oil Change Interval

The standard Cat HYDO oil change interval is every 2000 service hours or 1 year.

A 4000 service hour or a 2 year maintenance interval for hydraulic oil (change) is available. The extended interval requires S·O·S monitoring of the hydraulic oil. The interval for S·O·S monitoring is every 500 hours. The maintenance interval for the hydraulic oil filter is not changed.

Machines that are used in severe conditions are not included in the 4000 service hour or the 2 year maintenance interval. Machines that are used in severe conditions must use the interval in the Maintenance Interval Schedule.

Cat HYDO Advanced 10 Oil Change Interval

The standard Cat HYDO Advanced 10 oil change interval is every 3000 service hours or 18 months.

New machines are filled with Cat HYDO Advanced 10 oil at the factory.

A 6000 service hour or a 3 year maintenance interval for hydraulic oil (change) is available. The extended interval requires S·O·S monitoring of the hydraulic oil. The interval for S·O·S monitoring is every 500 hours. The maintenance interval for the hydraulic oil filter is not changed.

Machines that are used in severe conditions are not included in the 6000 service hour or the 3 year maintenance interval. Machines that are used in severe conditions must use the interval in the Maintenance Interval Schedule.

Reference: Refer to Operation and Maintenance Manual, “Lubricant Viscosities” for more information on hydraulic oils.

Change the Hydraulic Oil

WARNING

At operating temperature, the hydraulic tank is hot and under pressure.

Hot oil and components can cause personal injury. Do not allow hot oil or components to contact skin.

Remove the filler cap only when the engine is stopped, and the filler cap is cool enough to touch with your bare hand. Remove the filler cap slowly to relieve pressure.

NOTICE

Care must be taken to ensure that fluids are contained during performance of inspection, maintenance, testing, adjusting, and repair of the product. Be prepared to collect the fluid with suitable containers before opening any compartment or disassembling any component containing fluids.

Refer to Special Publication, NENG2500, “Dealer Service Tool Catalog” for tools and supplies suitable to collect and contain fluids on Cat products.

Dispose of all fluids according to local regulations and mandates.

1. Operate the machine in order to warm the oil. Park the machine on a level surface. Lower the work tool to the ground. Engage the parking brake.

2. Turn the engine start switch key to ON.

3. Move the hydraulic control levers through all of the positions in order to release pressure.

4. Turn the engine start switch key to OFF.

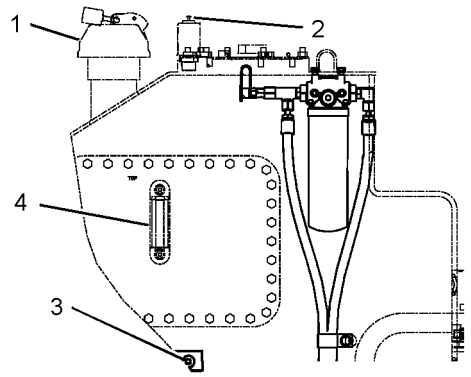

Illustration 227 g01425514

5. The hydraulic tank is located on the right side of the machine. Press the button on breaker relief valve (2) in order to relieve any tank pressure.

6. Slowly remove filler cap (1).

7. Clean the filler strainer and the filler cap in a clean nonflammable solvent.

8. Remove oil drain plug (3). The oil drain plug is located on the front of the hydraulic tank.

9. Attach a hose to a swivel. Install the swivel and the hose into the drain plug opening. A pipe nipple 10 cm (4 inch) and a hose can also be used. Use a 25.4 mm (1 inch) pipe with 1-11 1/2 NPTF threads. Do not tighten the pipe.

10. Rotate the swivel clockwise in order to open the internal drain valve. Allow the oil to drain into a suitable container.

11. Remove the swivel. The valve for the hydraulic tank will close.

12. Clean drain plug (3) and install the drain plug. Tighten the drain plug to a torque of 90 ± 15 N·m (65 ± 10 lb ft).

13. Change the hydraulic oil filter.

    Reference: For the correct procedure, refer to Operation and Maintenance Manual, “Hydraulic System Oil Filter - Replace”.

14. Install the filler strainer.

15. Fill the hydraulic oil tank.

    Reference: For the hydraulic tank capacity, refer to Operation and Maintenance Manual, “Capacities (Refill)”.

16. Inspect the filler cap gasket. Replace the gasket if damage or wear is evident.

17. Install filler cap (1).

18. Start the engine. Run the engine for a few minutes.

19. Maintain the oil level at the “FULL” mark (4) on the sight gauge. Add oil, if necessary.

20. Stop the engine.

i03954349

Hydraulic System Oil Filters - Replace

SMCS Code: 5068-510

WARNING

At operating temperature, the hydraulic tank is hot and under pressure.

Hot oil and components can cause personal injury. Do not allow hot oil or components to contact skin.

Before removing the filler cap, press the valve relief button on the hydraulic tank in order to relieve the tank pressure.

Remove the filler cap only when the engine is stopped and the filler cap is cool enough to touch with your bare hand. Remove the filler cap slowly in order to relieve any remaining pressure.

NOTICE

Care must be taken to ensure that fluids are contained during performance of inspection, maintenance, testing, adjusting and repair of the machine. Be prepared to collect the fluid with suitable containers before opening any compartment or disassembling any component containing fluids.

Refer to Special Publication, NENG2500, “Caterpillar Tools and Shop Products Guide”, for tools and supplies suitable to collect and contain fluids.

Dispose of all fluids according to local regulations and mandates.

Note: The hydraulic tank is equipped with three filter elements. The hydraulic tank is located on the right side of the machine.

1. Park the machine on a level surface. Lower the work tool to the ground. Engage the parking brake.
2. Turn the engine start switch key to ON.
3. Move the hydraulic control levers through all of the positions in order to release pressure.
4. Turn the engine start switch key to OFF.

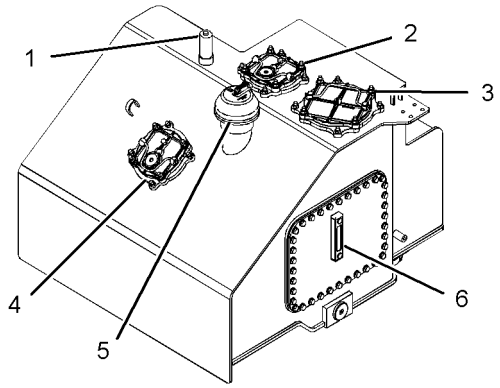

Illustration 228 g02158954

5. Press button (1) on the breaker relief valve in order to relieve any tank pressure.
6. Slowly remove filler cap (5).
7. Remove the cover mounting bolts in three places (2, 3, 4). Rotate the covers counterclockwise in order to remove the covers. Remove the cover seals. Replace the cover seals if the seals are damaged.

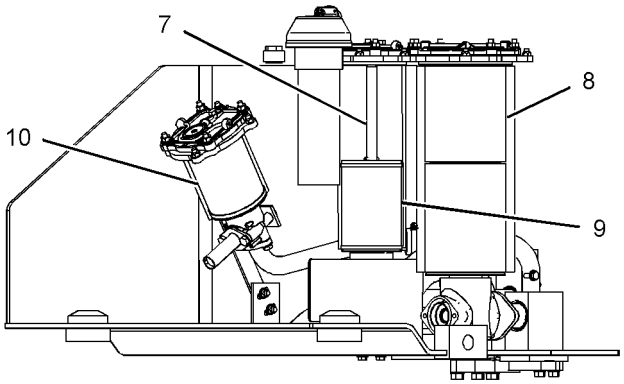

Illustration 229 g02161493

8. Unscrew the nuts that are located at the bottom of the rods. Remove the filter elements (8, 9) and (10) by sliding the filters off rods (7). Properly discard the filter elements. Install new filter elements. Screw the nuts onto the rods and tighten the nuts to a torque of 10 ± 1.5 N·m (7.4 ± 1.1 lb ft).

   If the rod was loosened during the removal of the retaining nut, tighten the rod to a torque of 35 ± 5 N·m (25 ± 3 lb ft).

Note: Use Reverse Flow Elements only in the hydraulic tank for the D11T Track-Type Tractor.

9. Clean the covers and the screens in a clean nonflammable solvent.

10. Inspect the cover seal and inspect the seal on the top of the tank in three places. Replace the seals if the seals are damaged.

11. Install the seals and the covers. Tighten the cover mounting bolts to a torque of 45 ± 7 N·m (32 ± 5 lb ft).

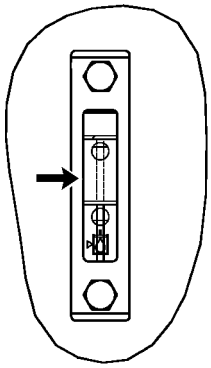

Illustration 230 g01179210

12. Maintain the hydraulic oil to the “FULL” mark (6) on the sight gauge.

13. Install filler cap (5).

i02861856

Hydraulic System Oil Level - Check

SMCS Code: 5056-535-FLV

WARNING

At operating temperature, the hydraulic tank is hot and under pressure.

Hot oil and components can cause personal injury. Do not allow hot oil or components to contact skin.

Remove the filler cap only when the engine is stopped, and the filler cap is cool enough to touch with your bare hand. Remove the filler cap slowly to relieve pressure.

The hydraulic tank is on the right rear side of the machine.

1. Lower the bulldozer and the ripper to the ground. Stop the engine.

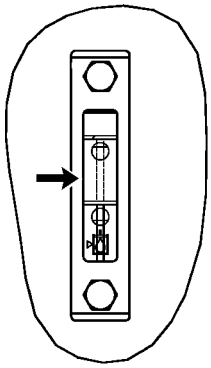

Illustration 231 g01179210

2. Maintain the oil level to the “FULL” mark on sight gauge (3).

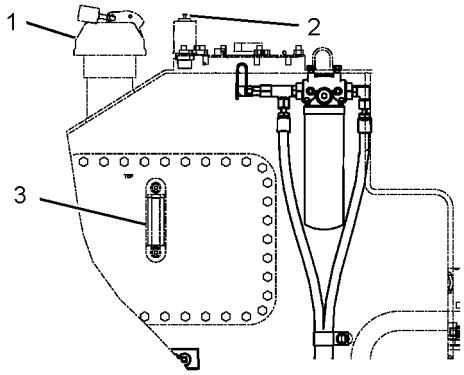

Illustration 232 g01425530
Front view

3. If the hydraulic system requires additional hydraulic oil, press button (2) on the breaker relief valve in order to relieve any tank pressure. Slowly remove filler cap (1) and add oil through the filler tube.

4. Clean filler cap (1) and install the filler cap.

i02858201

Hydraulic System Oil Sample - Obtain

SMCS Code: 5050-008; 7542-008

WARNING

Hot oil and components can cause personal injury.

Do not allow hot oil or components to contact skin.

NOTICE

Care must be taken to ensure that fluids are contained during performance of inspection, maintenance, testing, adjusting and repair of the product. Be prepared to collect the fluid with suitable containers before opening any compartment or disassembling any component containing fluids.

Refer to Special Publication, NENG2500, “Caterpillar Dealer Service Tool Catalog” for tools and supplies suitable to collect and contain fluids on Caterpillar products.

Dispose of all fluids according to local regulations and mandates.

Obtain the hydraulic oil sample as close as possible to the recommended sampling interval. The recommended sampling interval is every 500 service hours. In order to receive the full effect of S·O·S oil analysis, you must establish a consistent trend of data. In order to establish a pertinent history of data, perform consistent oil samplings that are evenly spaced.

1. Open the compartment covers that are above on the right side fender.

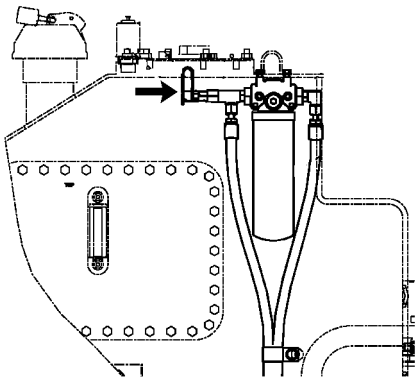

Illustration 233 g01424170

2. Remove the protective cap from the oil sampling port.

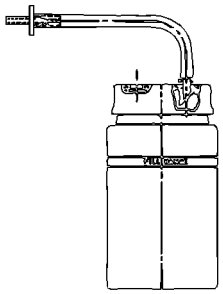

Illustration 234 g01178670

Note: Use the supplied probe and flush the fitting with oil into an approved container before obtaining oil sample.

3. Use 169-8373 Fluid Sampling Bottle in order to obtain the sample.

4. After you take a sample, remove the cap with the tube and the probe from the bottle. Discard the cap with the tube and the probe. Install the sealing cap that is provided with 169-8373 Fluid Sampling Bottle.

5. Replace the protective cap.

6. Close the compartment covers.

Refer to Operation and Maintenance Manual, “Lubricant Viscosities” for the correct fluid for your machine.

i02896247

Indicators and Gauges - Test

SMCS Code: 7450-081

WARNING

If the action alarm does not sound during this test or machine monitoring displays are not functioning, do not operate the machine until the cause has been corrected. Machine operation with faulty action alarms or displays could result in injury or death as any Warning Category 3 notifications will not be relayed to the operator.

Check the operation of the Monitoring System. Observe the self test when you start the engine.

The system performs an automatic self test when you turn the engine start switch to the ON position.

The self test verifies that the monitoring panel and the display modules are operating properly. The self testing feature verifies that the display module is properly operating.

The internal circuits, the indicators, and the gauges are automatically checked.

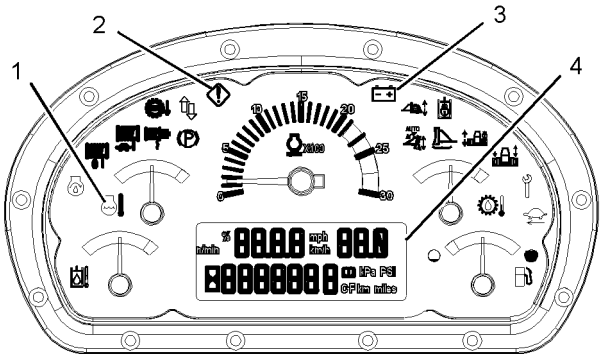

Illustration 235 g01424597

Instrument module

The operator must observe the indicators and the gauges in order to determine whether gauge module (1), action light (2), alert indicators (3), and the LCD display (4) are operating properly. The self test lasts for approximately three seconds.

During the self test, all status indicators on the instrument module light.

The digital display shows the following readouts:

- Initial part number of the instrument module
- All indicators of units (Deg C, kPa, rpm, and liters)
- Symbol for the hour meter
- “8.8.8.X.8.8” readout

The pointers in the quad gauge point upward. Then, the pointers point to the left. Then, the pointers point to the right. Then, the pointers point to the final position.

- The readout of the gear shows.
- The speed readout shows “888”, “MPH”, and “km/h”.
- The rear action light “ON then OFF”
- The forward action light stays illuminated.
- The action alarm sounds once.

The monitoring panel is then in the normal operating mode.

If the above tests are not correctly completed, the system will not function in the normal operating mode. Consult your Caterpillar dealer for an electrical system check. Any repairs must be made before you start the engine.

Turn on all of the machine lights. Check for proper operation. Sound the forward horn.

Stop the engine.

Make any necessary repairs before you operate the machine.

i04371323

Ladder - Adjust

SMCS Code: 0634-025; 7254-025

Adjust the Access Ladder

WARNING

Do not ride on ladder or stand on platform while machine is moving.

NOTICE
To avoid damage to the ladder during machine operation, keep the ladder in the LATCHED position.

1. Position adjustment for the hinge.
   a. Adjust the hinge so that the ladder is parallel to the top surface of the fender with the ladder in the UP position.
2. Adjustment for the location of the latch
   a. The latch should be adjusted so that the pins for the latch are equally engaged in the top and the bottom of the ladder.
3. Adjustment for the contact plates on the latch
   a. The contact plates on the latch should be adjusted in order to prevent any vertical movement or any side to side movement of the ladder when the latch pins are engaged in the ladder.
4. Adjustment for the location of the proximity switch
   a. With the ladder in the Up position, adjust the proximity switch so that the switch and the magnet are aligned.

b. There must be a gap between the magnet and the switch in order to prevent contact when the ladder moves. The gap between the magnet and the switch must be close enough to function correctly.

i03996530

Ladder Hinge Oil - Change

SMCS Code: 0634-510-OC; 7254-510-OC

Change the Oil

1. Park the machine.
2. Clean the areas on the hinge block that are near the oil level/fill plug and near the drain plug.
3. Remove the drain plug from the hinge block. Drain the oil completely into a suitable container.

Note: Inspect the oil for particles. Large particles indicate that a failure has occurred. Consult your Cat dealer if this issue occurs.

4. Install the drain plug. Fill the hinge block with “FDA060” oil to the bottom of the oil level/fill plug.
5. Install the oil level/fill plug. Inspect the hinge block for leaks. Repair any visible leaks.
6. Start the engine. See “Starting Engine”.

i02613792

Lift Cylinder Yoke Bearings - Lubricate

SMCS Code: 5102-086-BD

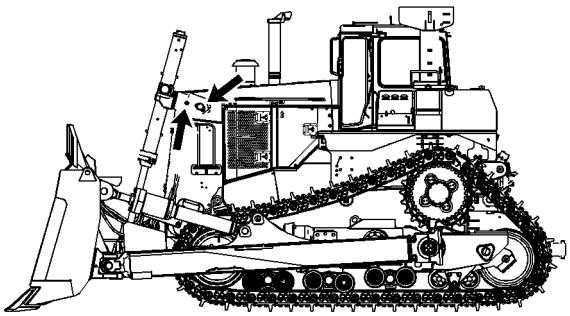

Illustration 236 g01308557

The fittings are on the left front side of the machine and on the right front side of the machine. Lubricate the bearings by applying grease to the fittings.

i02106227

Oil Filter - Inspect

SMCS Code: 1318-507; 3067-507; 5068-507

Inspect a Used Filter for Debris

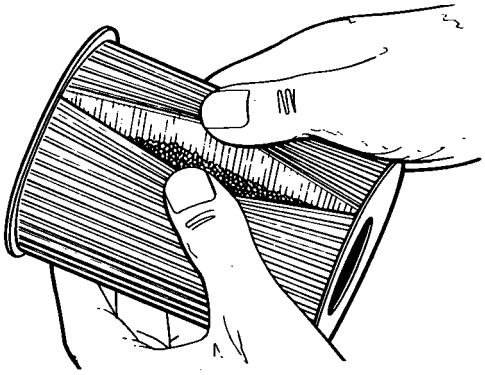

Illustration 237 g00100013

The element is shown with debris.

Use a filter cutter to cut the filter element open. Spread apart the pleats and inspect the element for metal and for other debris. An excessive amount of debris in the filter element can indicate a possible failure.

If metals are found in the filter element, a magnet can be used to differentiate between ferrous metals and nonferrous metals.

Ferrous metals can indicate wear on steel parts and on cast iron parts.

Nonferrous metals can indicate wear on the aluminum parts of the engine such as main bearings, rod bearings, or turbocharger bearings.

Small amounts of debris may be found in the filter element. This could be caused by friction and by normal wear. Consult your Caterpillar dealer in order to arrange for further analysis if an excessive amount of debris is found.

Using an oil filter element that is not recommended by Caterpillar can result in severe engine damage to engine bearings, to the crankshaft, and to other parts. This can result in larger particles in unfiltered oil. The particles could enter the lubricating system and the particles could cause damage.

i02849305

Oil Renewal System Oil - Add (If Equipped)

SMCS Code: 1348-538

1. Park the machine on level ground. Lower the attachment to the ground. Engage the parking brake and turn off the engine.

2. Open the access door on the left side of the cab that is in front of the hydraulic tank.

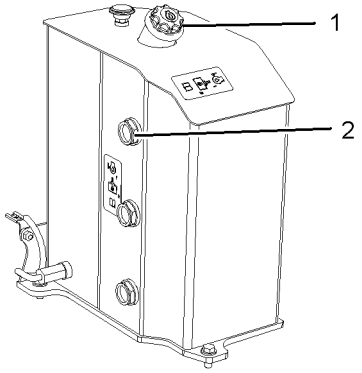

Illustration 238 g01420268

3. In order to fill the ORS manually, add SAE10W30 oil through the filler tube (1) until sight gauge (2) indicates that the ORS is “FULL”.

4. Close the access door.

Reference: For more information on the Oil Renewal System, refer to Systems Operation, RENR8160, “Oil Renewal System”.

Note: Oil change intervals for machines that are equipped with an oil renewal system (ORS) are determined by monitoring scheduled oil sampling. The oil change intervals are determined by close monitoring of the oil condition and engine wear metals. Caterpillar prefers the scheduled oil sampling as the proper method of checking engine wear metals. If scheduled oil sampling shows that the oil needs to be changed, refer to the Operation and Maintenance Manual, “Engine Oil and Filter Change”.

i02849053

Oil Renewal System Oil Level - Check (If Equipped)

SMCS Code: 1348-535

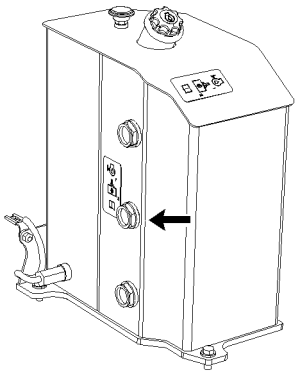

Illustration 239 g01420223

1. Open the access door on the left side of the cab that is in front of the hydraulic tank.

2. The oil level should be visible in the sight gauge.

3. If the oil level is low, engine oil should be added.

   Reference: See “Oil Renewal System Oil Level - Add” for more information.

Note: Keeping a daily maintenance log of all the additions of oil is necessary for determining whether the ORS is working properly.

4. Close the access door.

i02454125

Pivot Shaft Oil Level - Check

SMCS Code: 4153-535-FLV

WARNING

Hot oil and components can cause personal injury.

Do not allow hot oil or components to contact skin.

Open the left engine compartment.

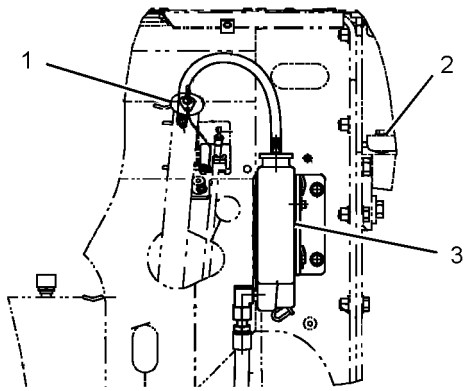

Illustration 240 g01224794

Front view

Pivot shaft oil bottle (3) is between transmission filler tube (1) and left tractor fender (2).

Maintain the oil within the limits of the dipstick for the oil reservoir. Do not overfill the oil reservoir. Hot oil can overflow the reservoir.

Remove the oil filler cap in order to add the oil to the oil reservoir.

i03966070

Power Train Breather - Clean

SMCS Code: 3030-070-BRE

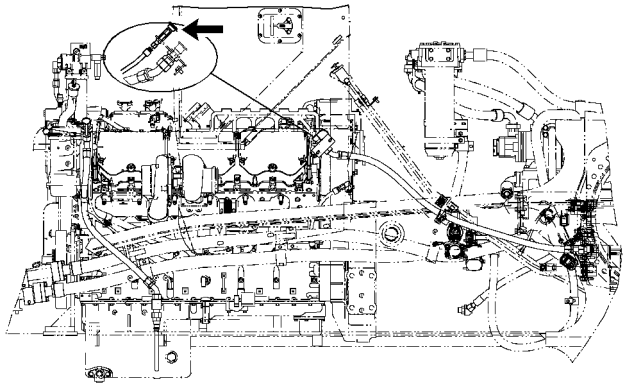

Illustration 241 g01424562

1. The transmission breather is located in an area near the pivot shaft oil bottle. The breather is on the bracket with the high speed oil change group for the power train. Unscrew and remove the transmission breather.

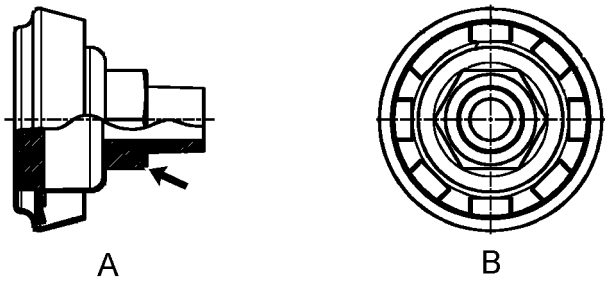

Illustration 242 g01424582

2. Clean the breather in a clean, nonflammable solvent. Allow the breather to air dry.

3. If the transmission breather is damaged or if the breather is not reusable, discard the used breather element. Install a new breather element.

4. Install the transmission breather.

Alternate Location

Some later machines will have an alternate location for the power train breather. This location is inside the enclosure above the left fender.

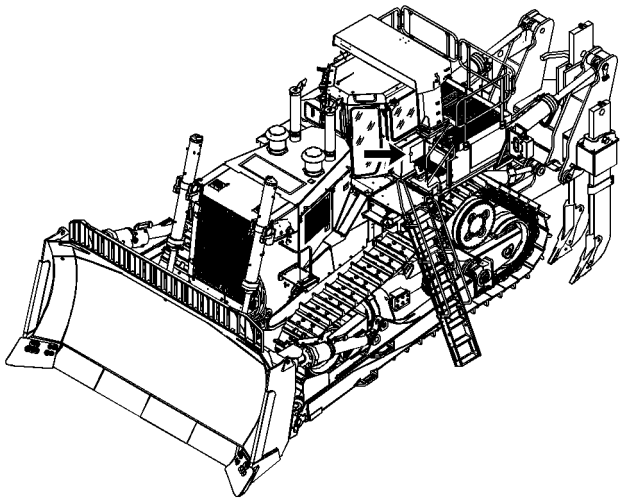

Illustration 243 g02161373

Open the access door to the left side enclosure, as shown. Unscrew and remove the transmission breather.

1. Perform steps 2 to 4

i03965809

Power Train Oil - Change

SMCS Code: 4000-044-OC

WARNING

Hot oil and components can cause personal injury.

Do not allow hot oil or components to contact skin.

NOTICE

Care must be taken to ensure that fluids are contained during performance of inspection, maintenance, testing, adjusting, and repair of the product. Be prepared to collect the fluid with suitable containers before opening any compartment or disassembling any component containing fluids.

Refer to Special Publication, NENG2500, “Dealer Service Tool Catalog” for tools and supplies suitable to collect and contain fluids on Cat products.

Dispose of all fluids according to local regulations and mandates.

Operate the machine in order to warm the power train oil. The machine must be level. Lower the attachments with slight down pressure.

Engage the parking brake switch. Stop the engine.

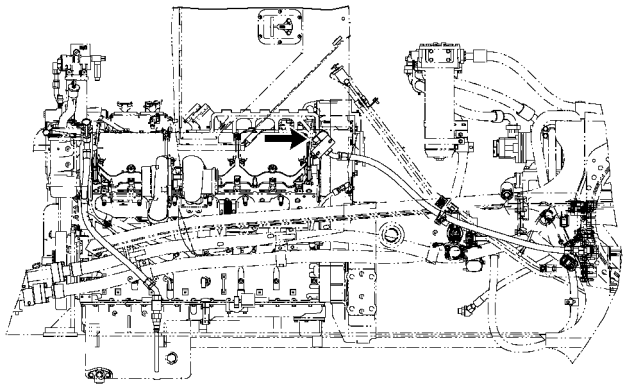

Illustration 244 g01229675

High speed oil change (transmission)

1. Open the left engine compartment. The machine is equipped for a high speed oil change. Use a 126-7538 Nozzle Assembly. The high speed oil change removes oil from the sump in the bevel gear case. The high speed oil change does not remove oil from the torque converter or from the transmission case.

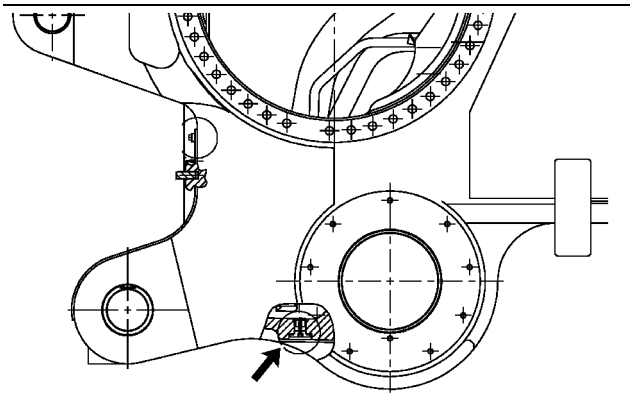

Illustration 245 g01181288

2. If the high speed oil change system is not used, remove the plug from the drain in the bevel gear case. Install a 4C-8563 Swivel into the valve. Clamp a hose to the swivel. A 25.4 mm (1 inch) pipe and hose can be used. Use a 25.4 mm (1 inch) pipe with 1-11 1/2 NPTF threads. Do not tighten the pipe.

3. Turn the swivel or pipe clockwise in order to open the internal drain valve. Allow the oil to drain into a suitable container.

4. Remove the swivel or remove the pipe from the drain in the bevel gear case. The drain valve will close.

5. Clean the oil drain plugs and install the oil drain plugs.

6. Change the filter element. See Operation and Maintenance Manual, “Power Train Oil Filter - Replace”.

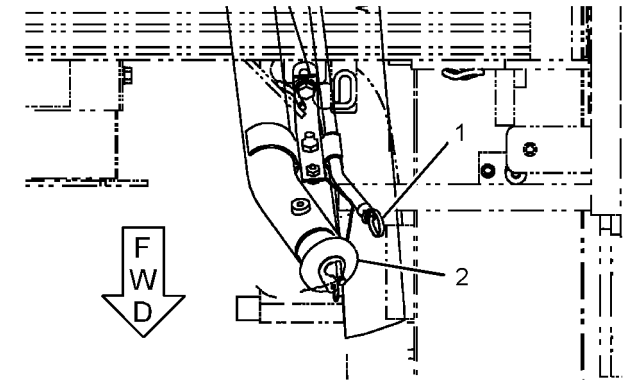

Illustration 246 g02173590

7. Open the left engine compartment for the transmission oil filler cap.

8. Remove the transmission oil filler cap (2).

9. Add oil. To determine the correct amount of oil, see Operation and Maintenance Manual, “Capacities (Refill)”.

10. Clean the transmission oil filler cap and install the transmission oil filler cap.

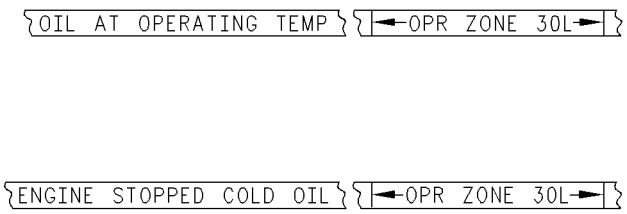

Illustration 247 g00611366

11. Maintain the oil level in the “OPR ZONE” on the dipstick (1). Close the access door.

i03653852

Power Train Oil Filters - Replace

SMCS Code: 3067-510

WARNING

Hot oil and components can cause personal injury.

Do not allow hot oil or components to contact skin.

NOTICE

Care must be taken to ensure that fluids are contained during performance of inspection, maintenance, testing, adjusting and repair of the product. Be prepared to collect the fluid with suitable containers before opening any compartment or disassembling any component containing fluids.

Refer to Special Publication, NENG2500, “Caterpillar Dealer Service Tool Catalog” for tools and supplies suitable to collect and contain fluids on Caterpillar products.

Dispose of all fluids according to local regulations and mandates.

Replace the filter elements if the transmission oil filter indicator comes on during operation.

One transmission oil filter is located under the walkway on the left side of the machine. The other transmission oil filter is located under the walkway on the right side of the machine. Remove the floorplates.

Perform the following steps for each transmission oil filter.

1. Remove the filter housing drain plug. The filter housing drain plug is located at the bottom of the transmission oil filter. Drain the oil into a suitable container. Reinstall the filter housing drain plug.

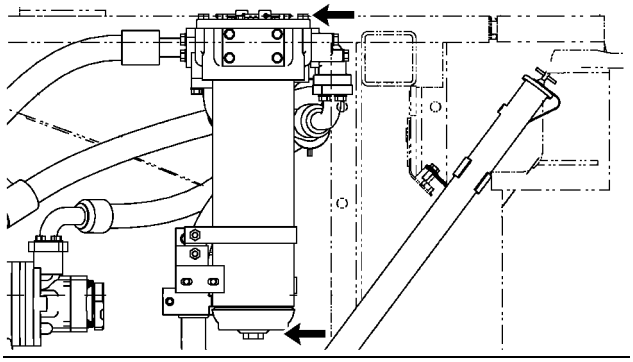

Illustration 248 g01180733

Right side view of left transmission oil filter

2. Remove the filter element cover assemblies.

3. Remove the filter elements and properly discard the filter elements.

4. Clean the filter element housing with a clean cloth.

5. Inspect the seal. If the seal is damaged, replace the seal.

6. Install the new filter elements. Install the filter element housing cover.

7. Start the engine.

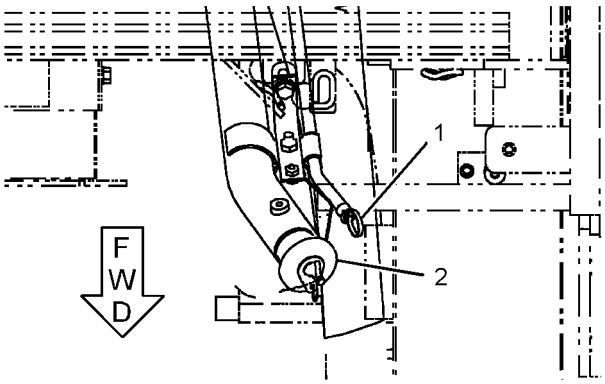

Illustration 249 g01307684

8. Maintain the oil level in the “OPR ZONE” on the dipstick (1). If necessary, add oil through the filler tube (2).

9. Stop the engine.

i03995569

Power Train System Oil Level - Check

SMCS Code: 3030-535-FLV

WARNING

Hot oil and components can cause personal injury.

Do not allow hot oil or components to contact skin.

The transmission oil dipstick is behind the engine access cover on the left side of the machine.

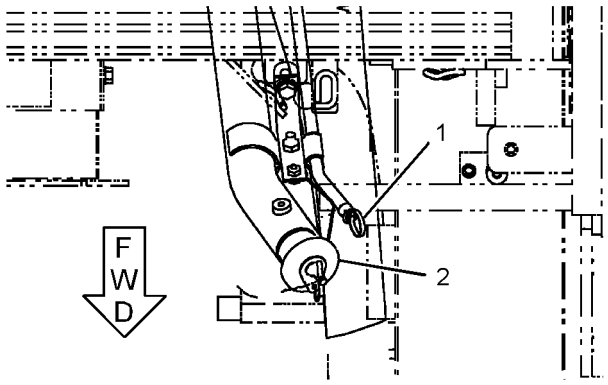

Illustration 250 g01307684

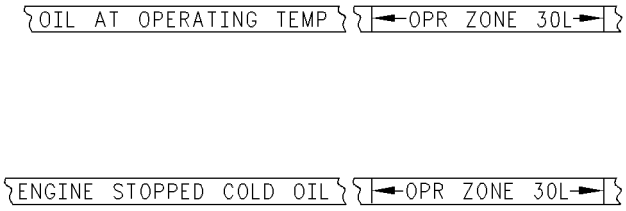

Illustration 251 g00611366

1. Open the access door.

2. Check the oil level with dipstick (1) when the engine is running at low idle and the oil is at operating temperature.

   HOT OIL:

   Use the “TRANSMISSION IN NEUTRAL, ENGINE AT LOW IDLE, AND OIL AT OPERATING TEMPERATURE” side of the dipstick (1). Check when the transmission is in NEUTRAL and the engine is running at LOW IDLE. The oil should be at operating temperature. Maintain the oil level between the “OPERATING ZONE” marks. This proceeding is the only accurate way to check the oil level.

   COLD OIL:

   Check the “ENGINE STOPPED COLD OIL” side of dipstick (1) while the engine is stopped. Maintain the oil between the “OPERATING ZONE” marks. This method should be used as reference only.

3. Remove filler cap (2). If necessary, add oil.

4. Clean the filler cap and install the filler cap.

   Replace the filter elements if the transmission oil filter indicator comes on during operation. See Operation and Maintenance Manual, “Power Train Oil Filters - Replace”.

5. Close the access door.

i03653872

Power Train System Oil Sample - Obtain

SMCS Code: 3080-008

WARNING

Hot oil and components can cause personal injury.

Do not allow hot oil or components to contact skin.

NOTICE
Care must be taken to ensure that fluids are contained during performance of inspection, maintenance, testing, adjusting and repair of the product. Be prepared to collect the fluid with suitable containers before opening any compartment or disassembling any component containing fluids.

Refer to Special Publication, NENG2500, “Caterpillar Dealer Service Tool Catalog” for tools and supplies suitable to collect and contain fluids on Caterpillar products.

Dispose of all fluids according to local regulations and mandates.

Obtain the sample of the transmission oil as close as possible to the recommended sampling interval. The recommended sampling interval is every 500 service hours. In order to receive the full effect of S·O·S oil analysis, you must establish a consistent trend of data.

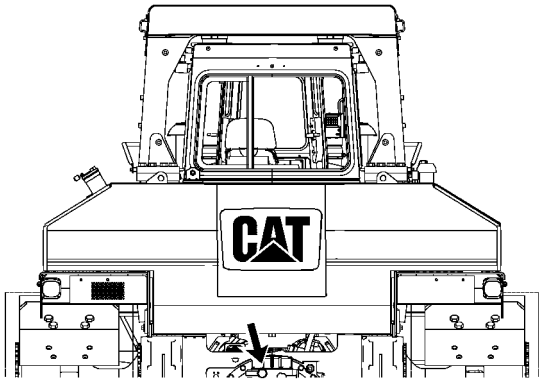

Illustration 252 g01307717

1. The oil sampling valve is located at the rear of the machine beneath the fuel tank. Remove the protective cap.

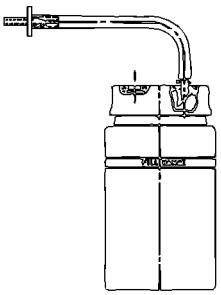

Illustration 253 g01178670

Note: Use the supplied probe and flush the fitting with oil into an approved container before obtaining oil sample.

2. Use 169-8373 Fluid Sampling Bottle in order to obtain a sample.

3. After you take a sample, remove the cap with the tube and the probe from the bottle. Discard the cap with the tube and the probe. Install the sealing cap that is provided with 169-8373 Fluid Sampling Bottle.

4. Replace the protective cap.

Refer to Operation and Maintenance Manual, “Lubricant Viscosities” for the correct fluid for your machine.

i04023412

Power Train System Screens - Clean

SMCS Code: 3067-070

WARNING

Hot oil and components can cause personal injury.

Do not allow hot oil or components to contact skin.

NOTICE
Care must be taken to ensure that fluids are contained during performance of inspection, maintenance, testing, adjusting and repair of the machine. Be prepared to collect the fluid with suitable containers before opening any compartment or disassembling any component containing fluids.

Refer to Special Publication, NENG2500, “Caterpillar Tools and Shop Products Guide”, for tools and supplies suitable to collect and contain fluids in Caterpillar machines.

Dispose of all fluids according to local regulations and mandates.

Operate the machine in order to warm the power train oil. The machine must be level. Lower the work tools with slight down pressure.

When you change the power train oil, clean the scavenge screens. **Drain the oil before you remove any screens.** An ecology drain is provided.

Power Train

1. Remove the cover on the power train guard in order to gain access to the screen.

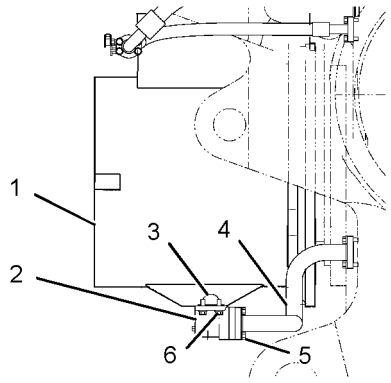

Illustration 254 g01180914

Right side view

2. Remove four bolts (5) that hold tube assembly (4) to elbow (2) on the bottom of power train (1).
3. Remove four bolts (6) that hold elbow (2) on power train (1).
4. Remove screen (3).
5. Clean the screen in a clean, nonflammable solvent.
6. Inspect the O-ring seal. If the seal is damaged, replace the seal.
7. Install screen (3), elbow (2) and four bolts (6).
8. Install four bolts (5) that hold tube assembly (4) to elbow (2) on the bottom of power train (1).
9. Install the cover on the power train guard.

Suction Screen

The suction screen for the power train is located below the cab.

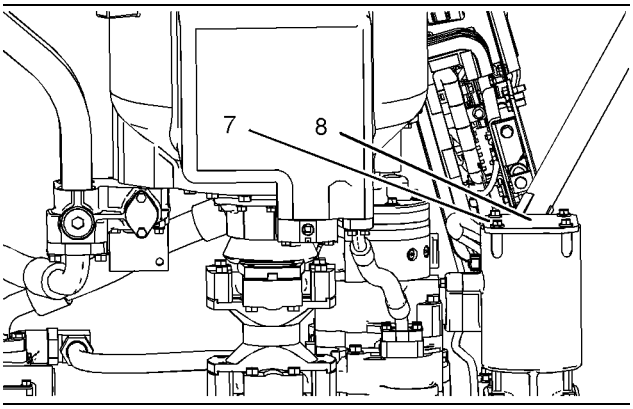

Illustration 255 g02161101

1. Remove the bolts (7) and remove the cover (8). Remove the screen that is located behind the housing.
2. Clean the screen in clean, nonflammable solvent.
3. Install the screen. Install the cover.
4. Refill the power train with oil. Refer to Operation and Maintenance Manual, “Power Train System Oil Level - Check” and Operation and Maintenance Manual, “Capacities (Refill)”.

i02612642

Radiator Core - Clean

SMCS Code: 1353-070; 1805-070; 1810-070

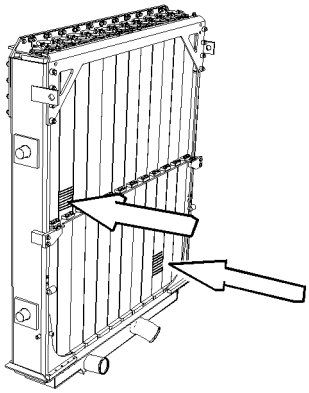

Illustration 256 g01307600

You can use compressed air, high pressure water, or steam to remove dust and other debris from the radiator core. However, the use of compressed air is preferred.

See Special Publication, SEBD0518, “Know Your Cooling System” for the complete procedure for cleaning the radiator core.

i02464499

Radiator Pressure Cap - Clean/Replace

SMCS Code: 1353-070-Z2; 1353-510-Z2

WARNING

At operating temperature, the engine coolant is hot and under pressure.

Steam can cause personal injury.

Check the coolant level only after the engine has been stopped and the fill cap is cool enough to touch with your bare hand.

Remove the fill cap slowly to relieve pressure.

Cooling system conditioner contains alkali. Avoid contact with the skin and eyes to prevent personal injury.

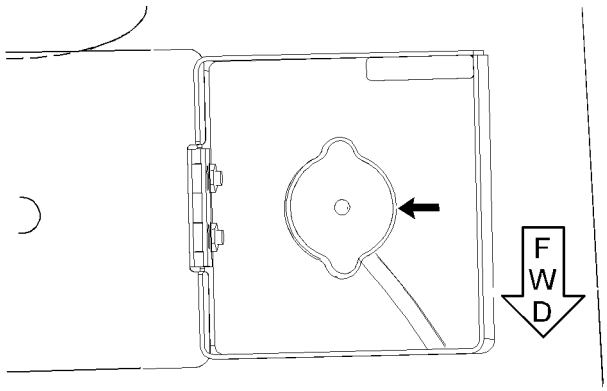

Illustration 257 g01229430

The radiator cap is positioned in the top left side of the hood.

1. Slowly remove the radiator cap in order to relieve system pressure.
2. Inspect the radiator cap for damage, for deposits, or for foreign material. Clean the radiator cap with a clean cloth. Replace the radiator cap if the radiator cap is damaged.
3. Install the radiator cap.

i02859708

Recoil Spring Compartment Oil Level - Check

SMCS Code: 4158-535-OC

WARNING

Hot oil and components can cause personal injury.

Do not allow hot oil or components to contact skin.

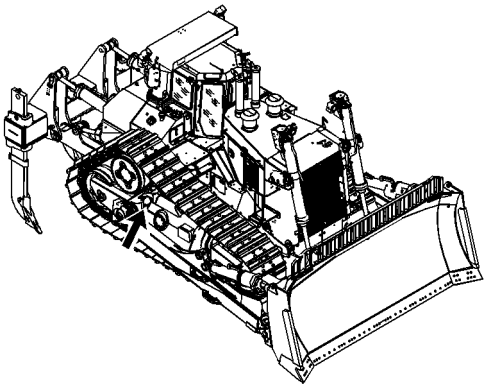

Illustration 258 g01229489

1. Remove the cover plate for the oil filler that is beneath the final drive.

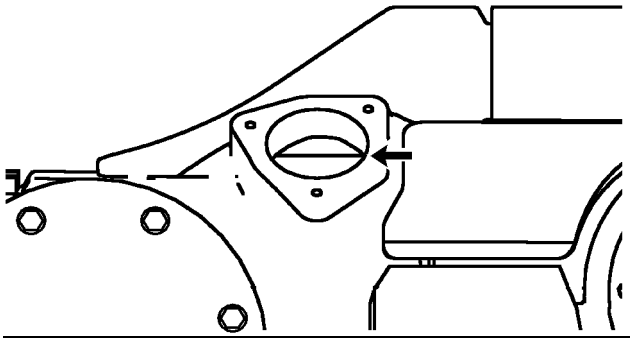

Illustration 259 g01180061

2. Maintain the oil level to the level mark on the inside of frame.
3. Install the cover plate.
4. Repeat the procedure for the other recoil compartment.

i04384157

Refrigerant Dryer - Replace

SMCS Code: 7322-510

WARNING

Personal injury can result from contact with refrigerant.

Contact with refrigerant can cause frost bite. Keep face and hands away to help prevent injury.

Protective goggles must always be worn when refrigerant lines are opened, even if the gauges indicate the system is empty of refrigerant.

Always use precaution when a fitting is removed. Slowly loosen the fitting. If the system is still under pressure, release it slowly in a well ventilated area.

Personal injury or death can result from inhaling refrigerant through a lit cigarette.

Inhaling air conditioner refrigerant gas through a lit cigarette or other smoking method or inhaling fumes released from a flame contacting air conditioner refrigerant gas, can cause bodily harm or death.

Do not smoke when servicing air conditioners or wherever refrigerant gas may be present.

Use a certified recovery and recycling cart to properly remove the refrigerant from the air conditioning system.

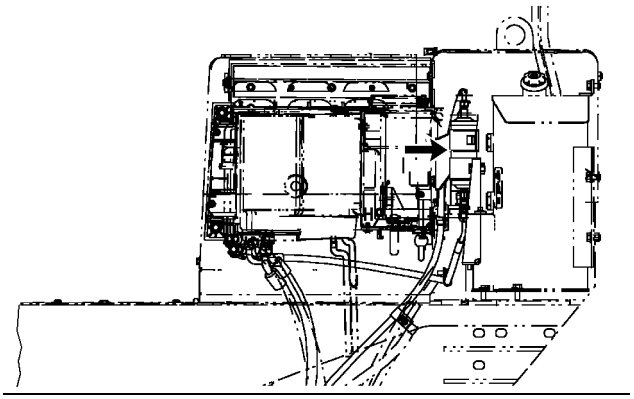

Illustration 260 g02158878

The refrigerant dryer receiver is located on the front left side of the fuel tank. The tube contains the desiccant that dries the liquid refrigerant.

Reference: Refer to Service Manual, SENR5664, “Air Conditioning and Heating Manual for R-134a” for the proper interval and the proper procedure.

i02613587

Ripper Linkage and Cylinder Bearings - Lubricate

SMCS Code: 6313-086-BD, L4

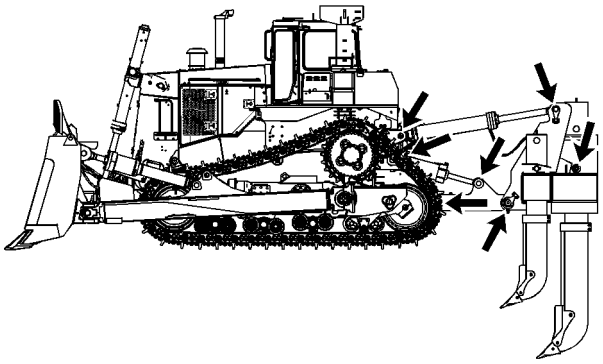

Illustration 261 g01308474

Lubricate twelve or more grease fittings, as required.

i02613590

Ripper Tip and Shank Protector - Inspect/Replace

SMCS Code: 6808-040; 6808-510; 6812-040; 6812-510

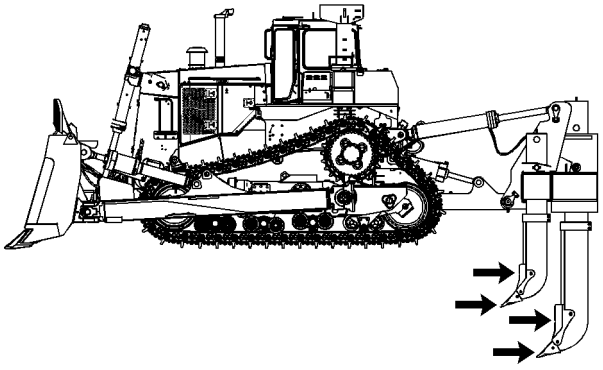

Illustration 262 g01308477

When the ripper tip is worn close to the shank, replace the ripper tip. When the shank protector is worn close to the shank, replace the shank protector. If the tip is too blunt, the tip will not penetrate properly.

1. Raise the ripper. Place blocking under the ripper. Lower the ripper onto the blocking. The ripper should be high enough so that the ripper tip or the shank protector can be removed. Do not place the ripper too high.
2. If the ripper tip is worn, drive out the pin. Remove the tip and the shank pin retainer.
3. Clean the shank pin retainer and the pin.
4. Install the new tip and the retainer.
5. Install the pin from the opposite side of the retainer.
6. Raise the ripper and remove the blocking.
7. Lower the ripper to the ground.

i03267881

Rollover Protective Structure (ROPS) - Inspect

SMCS Code: 7325-040

Note: The ROPS structure consists of the following components: ROPS assembly (1) (canopy) with upper ROPS mounting bolts (A) and ROPS support assembly (2) with lower ROPS mounting bolts (B). See Illustration 263.

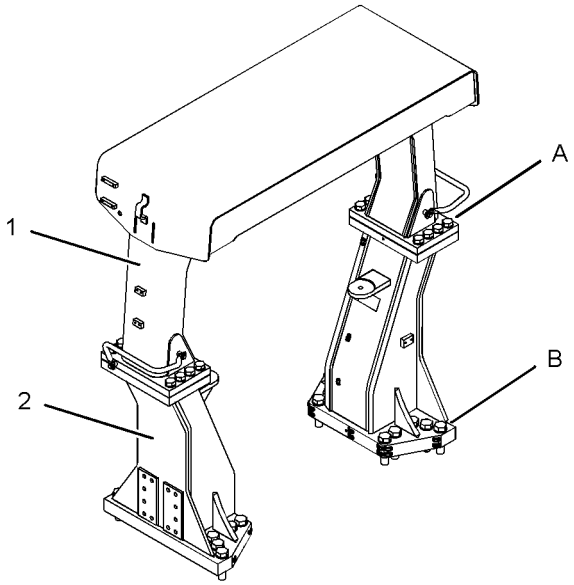

Illustration 263 g01666233

Inspect the ROPS structure, the canopy, and lower supports for any cracks or damage. If the ROPS has any cracks in the welds, in the castings, or in any metal section, consult your Caterpillar dealer for repairs.

Reference: See Special Instruction, SEBU6929, “Inspection, Maintenance and Repair of Rollover Protective Strructures (ROPS) and Attachment Installation Guidelines” for further guidance information.

Inspect both sides of the Rollover Protective Structure (ROPS) for bolts that are loose, broken or damaged. If any broken ROPS bolts (A) or (B) are found, replace all of ROPS bolts (A) or (B).

Replace any missing ROPS bolts with original replacement parts only.

Tighten any loose bolts that are not broken or damaged.

Tighten the ROPS bolts to the following torque.

ROPS bolt (A) – Tighten the sixteen upper bolts to 1800 ± 200 N·m (1325 ± 150 lb ft).

ROPS bolt (B) – Tighten the twenty lower bolts to 2000 ± 250 N·m (1475 ± 185 lb ft).

Note: Apply oil to all bolt threads for the ROPS before you install the ROPS bolts. Failure to apply oil to the bolt threads can result in improper bolt torque.

Note: Notify your Caterpillar dealer if broken bolts are found.

i04423622

Seat Belt - Inspect

SMCS Code: 7327-040

Always inspect the condition of the seat belt and the condition of the seat belt mounting hardware before you operate the machine. Replace any parts that are damaged or worn before you operate the machine.

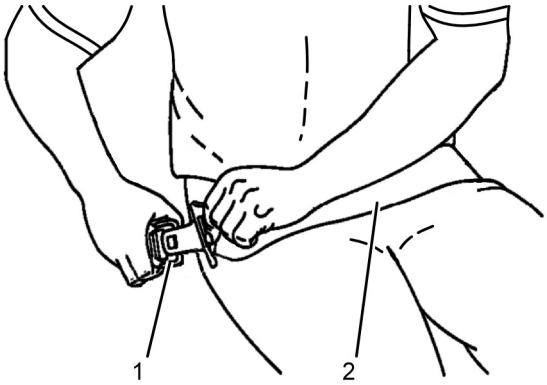

Illustration 264 g02620101

Typical example

Inspect buckle (1) for wear or for damage. If the buckle is worn or damaged, replace the seat belt.

Inspect seat belt (2) for webbing that is worn or frayed. Replace the seat belt if the webbing is worn or frayed.

Inspect all seat belt mounting hardware for wear or for damage. Replace any mounting hardware that is worn or damaged. Make sure that the mounting bolts are tight.

If your machine is equipped with a seat belt extension, also perform this inspection procedure for the seat belt extension.

Contact your Cat dealer for the replacement of the seat belt and the mounting hardware.

Note: The seat belt should be replaced within 3 years of the date of installation. A date of installation label is attached to the seat belt retractor and buckle. If the date of installation label is missing, replace belt within 3 years from the year of manufacture as indicated on belt webbing label, buckle housing, or installation tags (non-retractable belts).

i04421974

Seat Belt - Replace

SMCS Code: 7327-510

The seat belt should be replaced within 3 years of the date of installation. A date of installation label is attached to the seat belt retractor and buckle. If the date of installation label is missing, replace belt within 3 years from the year of manufacture as indicated on belt webbing label, buckle housing, or installation tags (non-retractable belts).

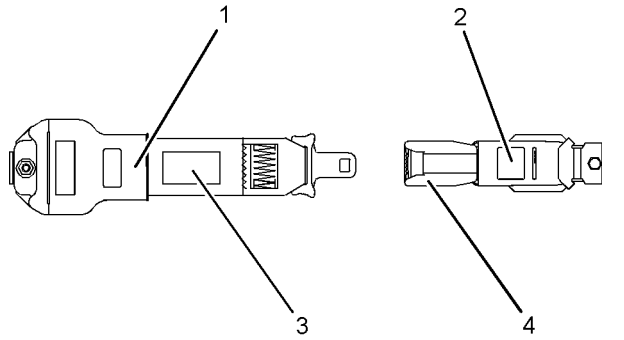

Illustration 265 g01152685

Typical Example

(1) Date of installation (retractor)
(2) Date of installation (buckle)
(3) Year of manufacture (tag) (fully extended Web)
(4) Year of manufacture (underside) (buckle)

Consult your Cat dealer for the replacement of the seat belt and the mounting hardware.

Determine age of new seat belt before installing on seat. A manufacture label is on belt webbing and imprinted on belt buckle. Do not exceed install by date on label.

Complete seat belt system should be installed with new mounting hardware.

Date of installation labels should be marked and affixed to the seat belt retractor and buckle.

Note: Date of installation labels should be permanently marked by punch (retractable belt) or stamp (non-retractable belt).

If your machine is equipped with a seat belt extension, also perform this replacement procedure for the seat belt extension.

i03967449

Torque Converter Scavenge Screen - Clean

SMCS Code: 3101-070-MGS

WARNING

Hot oil and components can cause personal injury.

Do not allow hot oil or components to contact skin.

After a major power train component failure, clean the torque converter scavenge screen.

1. Remove the bottom guard in order to gain access to the torque converter.

Note: Drain all fluids into a suitable container.

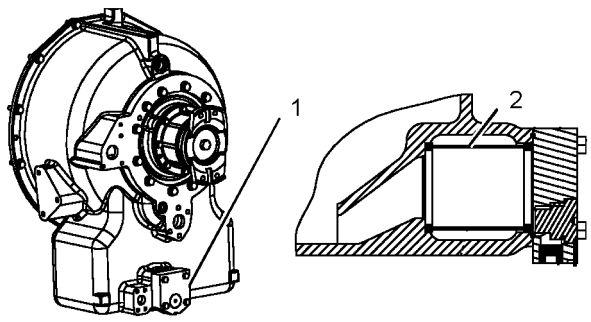

Illustration 266 g01387611

2. Remove the bolts and drain valve body (1) from the torque converter, as shown.

3. Remove torque converter scavenge screen (2) from the torque converter housing.

4. Wash the screen in a clean, nonflammable solvent.

5. Install torque converter scavenge screen (2) in the torque converter housing. Install the bolts and drain valve body (1).

6. Install the bottom guard.

Reference: See Operation and Maintenance Manual, “Power Train System Oil Level - Check” in order to fill with oil.

i02859795

Track - Check/Adjust

SMCS Code: 4170-036

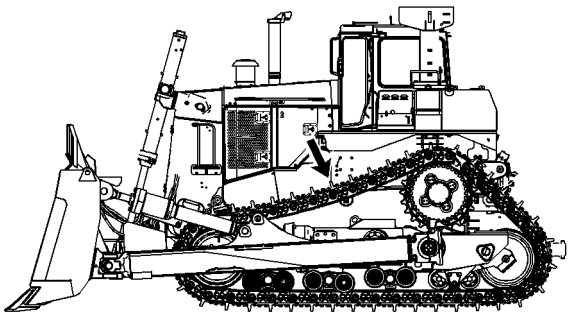

Illustration 267 g01308562

Check the track adjustment. Check the track for wear and for excessive dirt buildup.

WARNING

Personal injury or death can result from grease under pressure.

Grease coming out of the relief valve under pressure can penetrate the body causing injury or death.

Do not watch the relief valve to see if grease is escaping. Watch the track or track adjustment cylinder to see if the track is being loosened.

Loosen the relief valve one turn only.

If track does not loosen, close the relief valve and contact your Caterpillar dealer.

1. Move the machine forward. Allow the machine to coast to a stop without the use of the service brakes. Adjust the tracks while you are in the machine's typical operating conditions. If packing conditions prevail on the workplace, the tracks should be adjusted without removing the packed material.

   a. Make sure that the ripper is raised, if necessary.

2. To measure the sag in the track, stretch a string over the grousers that are between the sprocket and the front idler. Take the measurement from the string to the top of the grouser at the maximum measurement. Dimension (A) is the maximum distance between the string and the grouser.

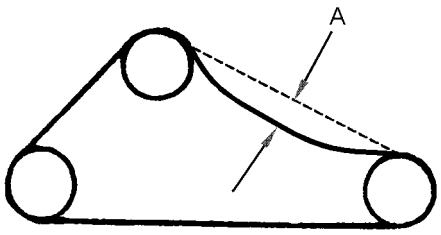

Illustration 268 g01109482

If a machine does not have carrier rollers, the sag in the track is measured between the sprocket and the front idler. The correct adjustment of dimension (A) is 165 ± 10 mm (6.5 ± .4 inch).

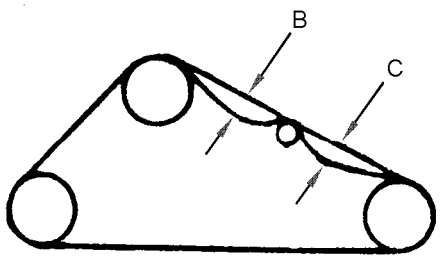

Illustration 269 g01118207

Track adjustment with carrier rollers

If the machine is equipped with a carrier roller, calculate the average of dimension (B) and dimension (C). The correct average value is 75 ± 10 mm (3.0 ± 0.4 inch).

Loose Track Adjustment

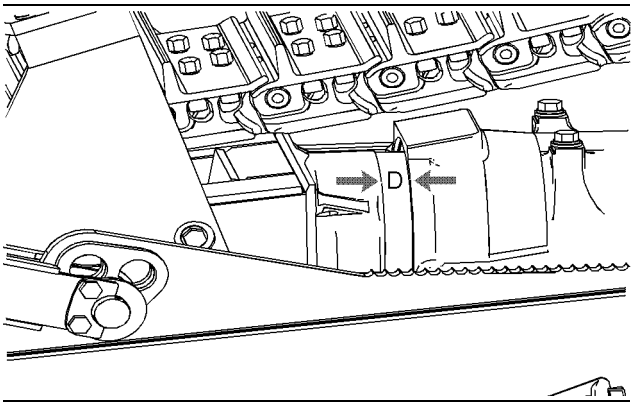

Illustration 270 g01019107

NOTICE

Do not attempt to tighten track when dimension (1) is 198 mm (7.8 inch) or more.

Contact your Caterpillar dealer for track service or instructions.

1. Remove the access cover.

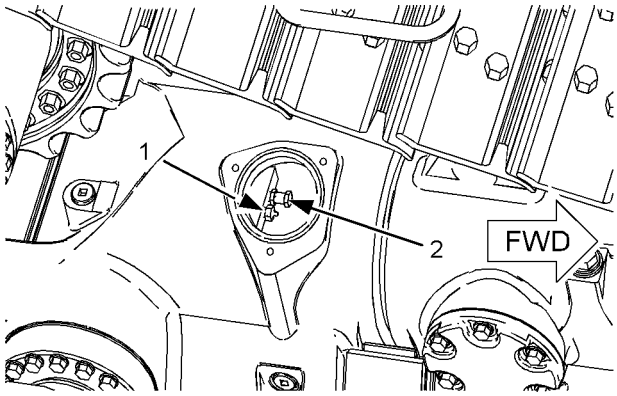

Illustration 271 g01019116

2. Add multipurpose grease (MPGM) through track adjustment valve (1). Add the MPGM until dimension (A) is correct.

3. Operate the machine back and forth in order to equalize the pressure. Allow the machine to coast to a complete stop. Do not use the brakes.

4. Remeasure dimension (A).

Tight Track Adjustment

1. Loosen relief valve (2) by one turn of 360 degrees. Allow the grease to escape.

2. Close the relief valve. Tighten the valve to a torque of 34 ± 7 N·m (25 ± 5 lb ft).

3. Add MPGM through track adjustment valve (1). Add grease until dimension (A) is correct.

4. Install the access cover.

Bolt Torque for Track Shoes

The torque requirement for track shoe bolts is 1500 ± 150 N·m (1100 ± 100 lb ft). Tighten the bolts for an additional 120 degrees. If you are using bolts with a master link, tighten the bolts to a torque of 1500 ± 150 N·m (1100 ± 100 lb ft). Then, tighten the bolts for an additional 180 degrees.

i02363445

Track Pins - Inspect

SMCS Code: 4175-040-PN

WARNING

Fingers can be burned from hot pins and bushings.

The pins and bushings in a dry joint can become very hot. It is possible to burn the fingers if there is more than brief contact with these components.

Use the recommendations in order to extend the life of the undercarriage. Use the recommendations in order to avoid excessive downtime.

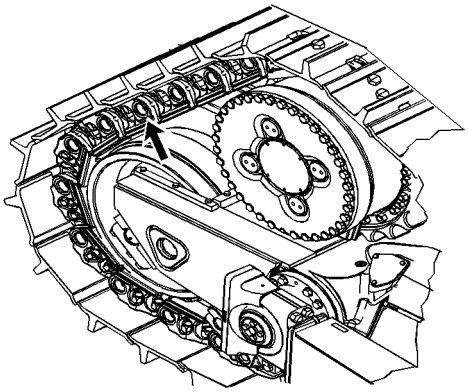

Illustration 272 g01180440

1. During the machine operation, listen for unusual squeaking and for unusual squealing. This can indicate a dry joint.

2. Check the machine for dry joints weekly. Check for dry joints immediately after machine operation. After machine operation, lightly touch the end of each track pin or bushing. Touch the track pin or the track bushing with the back of your hand. Make a mark on any dry track pin joint that is very hot to the touch.

3. Do not hit the ends of the track pins with a sledge hammer in order to loosen the track joints.

NOTICE
Striking the end of a track pin introduces a significant amount of end play into the track joint and can result in early failures.

Consult your Caterpillar dealer's Custom Track Service expert if you detect dry joints or leaks. Your Caterpillar dealer's Custom Track Service expert can perform track inspection.

i02613794

Track Roller Frame - Inspect

SMCS Code: 4151-040

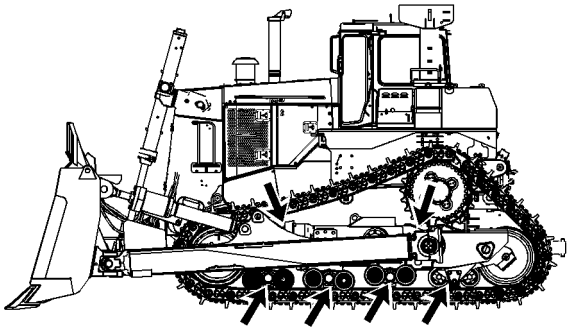

Illustration 273 g01308563

Inspect the track roller frame for leaks. Check the seal for the pivot shaft for oil leaks. Check the track rollers and idlers for leaks. Check the seal for the recoil spring for oil leaks.

i02363505

Track Roller Frame Guides - Inspect

SMCS Code: 4177-040

Measure the rotational movement of the front roller frame relative to the rear roller frame.

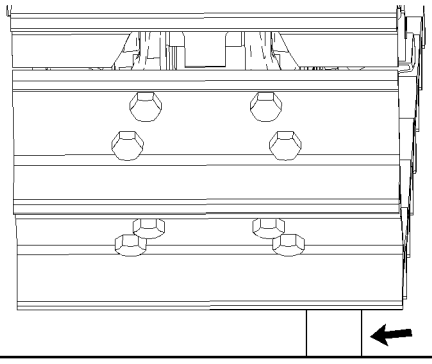

Illustration 274 g01049094

1. Raise the front of the machine with the hydraulics of the dozer. Place a 100 mm (4 inch) block under the outside edge of a track shoe. Place the block near the track idler. Lower the machine onto the block.

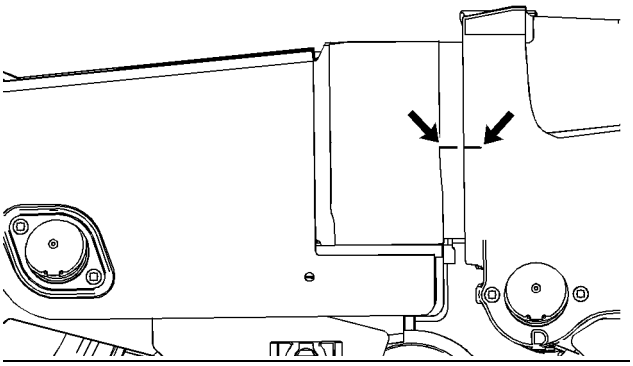

Illustration 275 g01049245

2. Use a grease pencil to make a mark on the tubular section of the front roller frame. Make a mark on the rear of the roller frame. This mark should correspond with the mark that is on the tubular section.

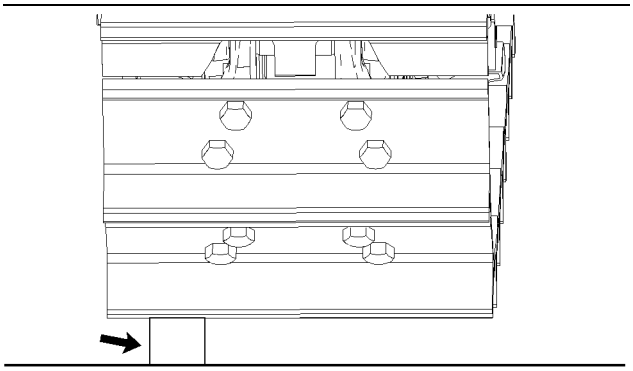

Illustration 276 g01049226

3. Raise the front of the machine with the hydraulics of the dozer. Place the block under the inside edge of the same track shoe. Lower the machine onto the block.

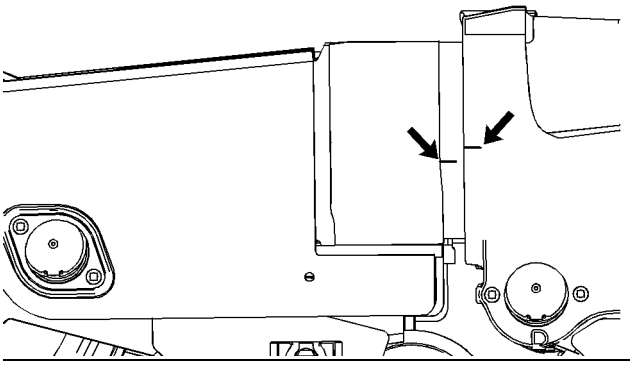

Illustration 277 g01049273

4. Measure the distance between the two marks on the front roller frame. If the distance between the two marks is greater than 4.5 mm (0.18 inch), inspect the track roller frame guides for wear.

Repeat the entire procedure for the other side of the machine.

NOTICE
Never build up the track roller frame guides with hard-face welding. This will cause serious wear damage to the guide slots in the front track roller frame.

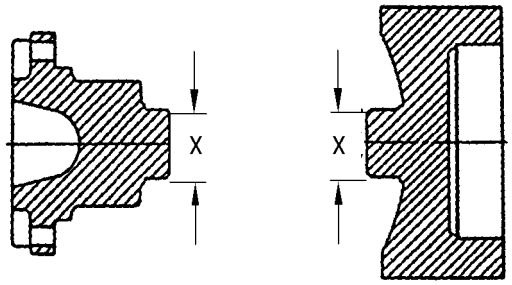

Illustration 278 g00039582
Track Roller Frame Guides

If dimension (X) is less than 45.3 mm (1.78 inch), replace the track roller frame guides.

Reference: Refer to Disassembly and Assembly, “Front Track Roller Frame - Remove” and refer to Disassembly and Assembly, “Front Track Roller Frame - Install” in the Service Manual for your machine. Also, consult your Caterpillar dealer for more information or for service.

i03409088

Walk-Around Inspection

SMCS Code: 7000-040

Reference: See Operation and Maintenance Manual, “Daily Inspection” for more information.

i02044219

Window Washer Reservoir - Fill

SMCS Code: 7306-544

NOTICE
When operating in freezing temperatures, use Caterpillar or any commercially available nonfreezing window washer solvent.

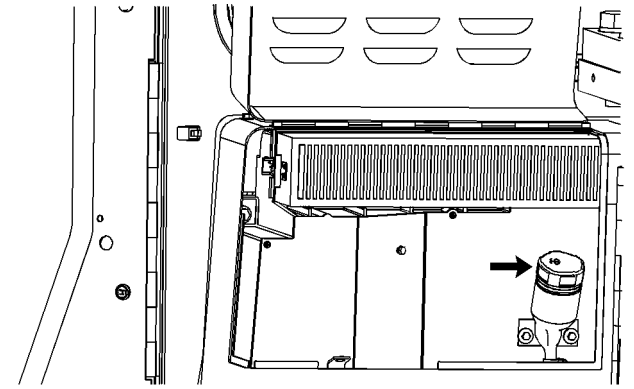

Illustration 279 g01049872

The washer fluid bottle is on the left side of the machine above the battery box. Remove the fluid bottle cap in order to fill the washer fluid bottle.

i02849617

Window Wipers - Inspect/Replace

SMCS Code: 7305-040; 7305-510

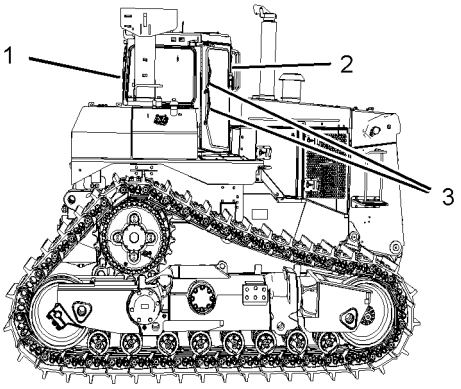

Illustration 280 g01420307

(1) Rear window wiper
(2) Front window wiper
(3) Side window wiper

Inspect the front window wiper blade, the side window wiper blades and the rear window wiper blade. Replace any wiper blades that are damaged or worn. Replace any wiper blades that streak the window.

i02861784

Windows - Clean

SMCS Code: 7310-070; 7340-070

If equipped:

Use commercially available window cleaning solutions to clean the windows.

To clean the outside of the rear window from the inside of the cab, remove the sliding section of the rear window. Use the following procedure in order to remove the sliding section of the rear window.

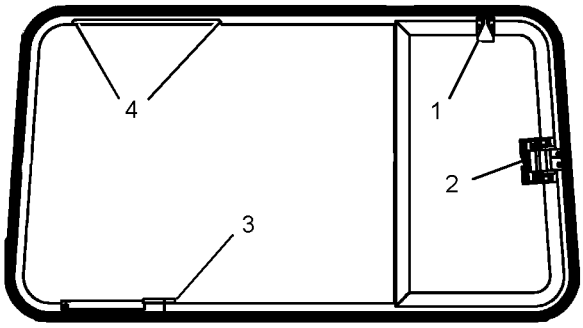

Illustration 281 g01181500

1. Lift latch (1) in order to slide the small window. Squeeze latch (2) in order to move the window from the CLOSED position.
2. Move handle stop (3) to the UP position. To move the handle stop to the UP position, lift the handle and rotate the handle simultaneously. Rotate the handle until the handle is vertical.
3. Move the small section of the window to opening (4) in the upper window channel.
4. Tilt the top of the window toward the inside of the cab. Remove the window.
5. Stay inside the cab in order to clean the outside of the rear window.
6. After cleaning, install the sliding section of the rear window.

Cleaning From Ground Level

Note: Use the following method in order to clean a solid rear window.

Use commercially available window cleaning solutions in order to clean the windows. Clean the outside of the windows from the groundor with the use of a man lift, unless appropriate handholds are available.

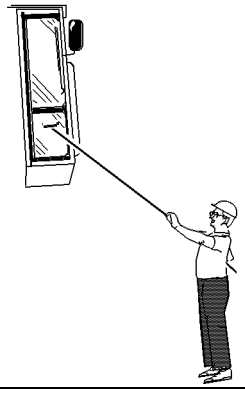

Illustration 282 g00566124

Typical example

Use a pole with a squeegee in order to reach the high areas of the window.