Infoprint 1222

Edition: September 2002

The following paragraph does not apply to any country where such provisions are inconsistent with local law: LEXMARK INTERNATIONAL, INC. PROVIDES THIS PUBLICATION “AS IS” WITHOUT WARRANTY OF ANY KIND, EITHER EXPRESS OR IMPLIED, INCLUDING, BUT NOT LIMITED TO, THE IMPLIED WARRANTIES OF MERCHANTABILITY OR FITNESS FOR A PARTICULAR PURPOSE. Some states do not allow disclaimer of express or implied warranties in certain transactions; therefore, this statement may not apply to you.

This publication could include technical inaccuracies or typographical errors. Changes are periodically made to the information herein; these changes will be incorporated in later editions. Improvements or changes in the products or the programs described may be made at any time.

Comments may be addressed to Lexmark International, Inc., Department D22A/032-2, 740 West New Circle Road, Lexington, Kentucky 40550, U.S.A or e-mail at ServiceInfoAndTraining@Lexmark.com. Lexmark may use or distribute any of the information you supply in any way it believes appropriate without incurring any obligation to you. You can purchase additional copies of publications related to this product by calling 1-800-553-9727. In other countries, contact your point of purchase.

Lexmark, Lexmark with diamond design, MarkNet, MarkVision, Optra, and *Pre*bate are trademarks of Lexmark International, Inc., registered in the United States and/or other countries.

Optra Forms and PictureGrade are trademarks of Lexmark International, Inc.

Other trademarks are the property of their respective owners.

© Copyright Lexmark International, Inc. 2002.
All rights reserved.

UNITED STATES GOVERNMENT RESTRICTED RIGHTS
This software and documentation are provided with RESTRICTED RIGHTS. Use, duplication or disclosure by the Government is subject to restrictions as set forth in subparagraph (c)(1)(ii) of the Rights in Technical Data and Computer Software clause at DFARS 252.227-7013 and in applicable FAR provisions: Lexmark International, Inc., Lexington, KY 40550.

U.S.A. P/N 12G9119

Table of Contents

Laser Notices vii

Safety Information xvii

Preface xxii

General Information 1-1

Maintenance Approach 1-1
Special Tools 1-1
Serial Number 1-2
Printer Identification 1-2
Printer Features 1-3
Memory and User Flash Memory 1-3
Resolution and Print Quality 1-4
Print Area 1-5
Print Media 1-6
Printer Data Streams 1-7
Fonts 1-8
Paper Handling 1-8
Connectivity 1-10
Printer Speed 1-11
RIP Card Specifications 1-11
Supplies 1-12
Operator Panel 1-12
Options 1-13
Acronyms 1-14

Diagnostic Information 2-1

Start 2-1
Operator Panel 2-2
Light Patterns 2-3
Status Information Light Patterns 2-3
Attendance Information Light Patterns 2-5
Obtaining Information about Printer Service Error Codes. . . 2-11
Service Error Codes 2-11
Power–On Operations. 2-22
Power–On Self Test (POST). 2-23
Symptom Tables 2-23

Service Checks 2-26
Cooling Fan Service Check 2-26
Cover Interlock Switch Service Check 2-27
RIP Card Service Check 2-28
Dead Machine Service Check 2-30
Low Voltage Power Supply (LVPS) Service Check 2-30
Fuser Service Check 2-31
Main Motor Service Check 2-34
Operator Panel Service Check. 2-35
Transfer Roll Service Check 2-37
Paper Feed Service Checks. 2-38
Parallel Port Service Check 2-44
Print Quality Service Checks 2-45
Solving Print Quality Problems 2-52
Restoring Factory Defaults 2-59
Using Print Quality Test Pages 2-59

Diagnostic Aids 3-1

Operator Panel 3-1
Menu Definition 3-1
Configuration Menu Group or Diagnostic Menu Group 3-2
Printer Diagnostics Mode 3-6
Continuity Check on HVPS/Cartridge 3-7

Repair Information 4-1

Handling ESD-Sensitive Parts 4-1
Adjustments 4-2
Printhead Assembly Adjustment 4-2
Adjusting Paper Feed Alignment 4-3
Removal Procedures 4-4
Cover Removals. 4-4
Rear Exit Door Removal. 4-16
Duplex Tray Assembly Removal 4-17
Fuser Assembly, Fuser Paper Exit Guide,
Fuser Exit Sensor, and Fuser Lamp Removal 4-18
Terminal Assembly Removal 4-20
Tray Damper and Spring Removal. 4-21
Door Latches (Right Side) Removal. 4-22
Bracket, Opener Shutter Removal 4-23
Roller Stopper Removal 4-24
Charge Roll Removal 4-25
Right Guide Removal 4-26
Left Guide Removal 4-26

Smart Button Sensor Removal 4-29
Entrance Guide Removal 4-30
Transfer Roll Assembly and Left Transfer Support Bearing Removal. 4-31
Bracket, Paper Detect (Input Sensor) Removal 4-32
D–Roll Tray 1 Feed Removal 4-33
D–Roll (Tray 1) Shaft Assembly Removal. 4-34
3–Pin and 2–Pin Connectors Removal 4-36
Printhead Removal 4-37
RIP Card Cage (with card in place) Removal 4-38
Main Drive Motor Assembly Removal. 4-40
Motor Assembly (Stepper) Removal 4-41
Main Drive Assembly Removal 4-42
Reference Plate Assembly Removal. 4-44
Cartridge Coupling Assembly Removal 4-46
Upper (MPF) Housing Assembly (with Paper Flag) Removal 4-47
Lower (MPF) Housing Assembly - Paper Sensor Removal . 4-48
Lower (MPF) Housing Assembly Removal 4-50
MPF Roller Assembly Removal 4-51
HVPS Card Removal 4-54
LVPS Card Removal. 4-55
Cooling Fan Removal 4-56

Locations 5-1

Cables 5-2
Cables (continued) 5-4
Sensors 5-6
RIP Card Assembly 5-8
Power Supply (LVPS) 5-11
High Voltage Power Supply (HVPS) 5-12

Preventive Maintenance 6-1

Safety Inspection Guide 6-1
Lubrication Specifications 6-1

Parts Catalog 7-1

How to Use This Parts Catalog 7-1

Index I-1

Laser Notices

The following laser notice labels may be affixed to this printer as shown:

Laser advisory label

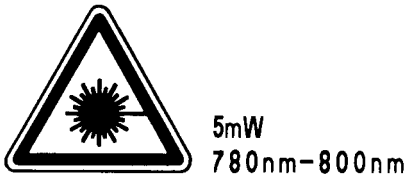

DANGER – INVISIBLE LASER RADIATION WHEN OPEN.
AVOID DIRECT EXPOSURE TO BEAM.

VORSICHT-UNSICHTBARE LASERSTRAHLUNG. WENN ABDECKUNG
GEÖFFNET UND SICHERHEITSVERRIEGELUNG
ÜBERBRÜCKT. NICHT DEM STRAHL AUSSETZEN.

DANGER – RAYON LASER INVISIBLE LORS DE L'OUVER TURE.
EVITER L'EXPOSITION DIRECTE.

PELIGRO – RADIACION LASER INVISIBLE AL ABRIR. EVITAR
LA EXPOSICION DIRECTA AL HAZ.

危 険 開けたときレーザ放射の危険有り。
ビームに直接当たらないように注意して下さい。 **MAS**

Laser Notice

The printer is certified in the U.S. to conform to the requirements of DHHS 21 CFR Subchapter J for Class I (1) laser products, and elsewhere is certified as a Class I laser product conforming to the requirements of IEC 60825-1.

Class I laser products are not considered to be hazardous. The printer contains internally a Class IIIb (3b) laser that is nominally a 5 milliwatt gallium arsenide laser operating in the wavelength region of 770-795 nanometers. The laser system and printer are designed so there is never any human access to laser radiation above a Class I level during normal operation, user maintenance, or prescribed service condition.

Laser

Der Drucker erfüllt gemäß amtlicher Bestätigung der USA die Anforderungen der Bestimmung DHHS (Department of Health and Human Services) 21 CFR Teil J für Laserprodukte der Klasse I (1). In anderen Ländern gilt der Drucker als Laserprodukt der Klasse I, der die Anforderungen der IEC (International Electrotechnical Commission) 60825-1 gemäß amtlicher Bestätigung erfüllt.

Laserprodukte der Klasse I gelten als unschädlich. Im Inneren des Druckers befindet sich ein Laser der Klasse IIIb (3b), bei dem es sich um einen Galliumarsenlaser mit 5 Milliwatt handelt, der Wellen der Länge 770-795 Nanometer ausstrahlt. Das Lasersystem und der Drucker sind so konzipiert, daß im Normalbetrieb, bei der Wartung durch den Benutzer oder bei ordnungsgemäßer Wartung durch den Kundendienst Laserbestrahlung, die die Klasse I übersteigen würde, Menschen keinesfalls erreicht.

Avis relatif à l’utilisation de laser

Pour les Etats-Unis : cette imprimante est certifiée conforme aux provisions DHHS 21 CFR alinéa J concernant les produits laser de Classe I (1). Pour les autres pays : cette imprimante répond aux normes IEC 60825-1 relatives aux produits laser de Classe I.

Les produits laser de Classe I sont considérés comme des produits non dangereux. Cette imprimante est équipée d’un laser de Classe IIIb (3b) (arséniure de gallium d’une puissance nominale de 5 milliwatts) émettant sur des longueurs d’onde comprises entre 770 et 795 nanomètres. L’imprimante et son système laser sont conçus pour impossible, dans des conditions normales d’utilisation, d’entretien par l’utilisateur ou de révision, l’exposition à des rayonnements laser supérieurs à des rayonnements de Classe I .

Avvertenze sui prodotti laser

Questa stampante è certificata negli Stati Uniti per essere conforme ai requisiti del DHHS 21 CFR Sottocapitolo J per i prodotti laser di classe 1 ed è certificata negli altri Paesi come prodotto laser di classe 1 conforme ai requisiti della norma CEI 60825-1.

I prodotti laser di classe non sono considerati pericolosi. La stampante contiene al suo interno un laser di classe IIIb (3b) all’arseniuro di gallio della potenza di 5mW che opera sulla lunghezza d’onda compresa tra 770 e 795 nanometri. Il sistema laser e la stampante sono stati progettati in modo tale che le persone a contatto con la stampante, durante il normale funzionamento, le operazioni di servizio o quelle di assistenza tecnica, non ricevano radiazioni laser superiori al livello della classe 1.

Avisos sobre el láser

Se certifica que, en los EE.UU., esta impresora cumple los requisitos para los productos láser de Clase I (1) establecidos en el subcapítulo J de la norma CFR 21 del DHHS (Departamento de Sanidad y Servicios) y, en los demás países, reúne todas las condiciones expuestas en la norma IEC 60825-1 para productos láser de Clase I (1).

Los productos láser de Clase I no se consideran peligrosos. La impresora contiene en su interior un láser de Clase IIIb (3b) de arseniuro de galio de funcionamiento nominal a 5 milivatios en una longitud de onda de 770 a 795 nanómetros. El sistema láser y la impresora están diseñados de forma que ninguna persona pueda verse afectada por ningún tipo de radiación láser superior al nivel de la Clase I durante su uso normal, el mantenimiento realizado por el usuario o cualquier otra situación de servicio técnico.

Declaração sobre Laser

A impressora está certificada nos E.U.A. em conformidade com os requisitos da regulamentação DHHS 21 CFR Subcapítulo J para a Classe I (1) de produtos laser. Em outros locais, está certificada como um produto laser da Classe I, em conformidade com os requisitos da norma IEC 60825-1.

Os produtos laser da Classe I não são considerados perigosos. Internamente, a impressora contém um produto laser da Classe IIIb (3b), designado laser de arseneto de potássio, de 5 milliwatts ,operando numa faixa de comprimento de onda entre 770 e 795 nanómetros. O sistema e a impressora laser foram concebidos de forma a nunca existir qualquer possiblidade de acesso humano a radiação laser superior a um nível de Classe I durante a operação normal, a manutenção feita pelo utilizador ou condições de assistência prescritas.

Laserinformatie

De printer voldoet aan de eisen die gesteld worden aan een laserprodukt van klasse I. Voor de Verenigde Staten zijn deze eisen vastgelegd in DHHS 21 CFR Subchapter J, voor andere landen in IEC 60825-1.

Laserprodukten van klasse I worden niet als ongevaarlijk aangemerkt. De printer is voorzien van een laser van klasse IIIb (3b), dat wil zeggen een gallium arsenide-laser van 5 milliwatt met een golflengte van 770-795 nanometer. Het lasergedeelte en de printer zijn zo ontworpen dat bij normaal gebruik, bij onderhoud of reparatie conform de voorschriften, nooit blootstelling mogelijk is aan laserstraling boven een niveau zoals voorgeschreven is voor klasse 1.

Lasermeddelelse

Printeren er godkendt som et Klasse I-laserprodukt, i overenstemmelse med kravene i IEC 60825-1.

Klasse I-laserprodukter betragtes ikke som farlige. Printeren indeholder internt en Klasse IIIB (3b)-laser, der nominelt er en 5 milliwatt galliumarsenid laser, som arbejder på bølgelængdeområdet 770-795 nanometer. Lasersystemet og printeren er udformet således, at mennesker aldrig udsættes for en laserstråling over Klasse I-niveau ved normal drift, brugervedligeholdelse eller obligatoriske servicebetingelser.

Huomautus laserlaitteesta

Tämä kirjoitin on Yhdysvalloissa luokan I (1) laserlaitteiden DHHS 21 CFR Subchapter J -määrityksen mukainen ja muualla luokan I laserlaitteiden IEC 60825-1 -määrityksen mukainen.

Luokan I laserlaitteiden ei katsota olevan vaarallisia käyttäjälle. Kirjoittimessa on sisäinen luokan IIIb (3b) 5 milliwatin galliumarsenidilaser, joka toimii aaltoalueella 770 - 795 nanometriä. Laserjärjestelmä ja kirjoitin on suunniteltu siten, että käyttäjä ei altistu luokan I määrityksiä voimakkaammalle säteilylle kirjoittimen normaalin toiminnan, käyttäjän tekemien huoltotoimien tai muiden huoltotoimien yhteydessä.

VARO! Avattaessa ja suojalukitus ohitettaessa olet alttiina näkymättömälle lasersäteilylle. Älä katso säteeseen.

VARNING! Osynlig laserstrålning när denna del är öppnad och spärren är urkopplad. Betrakta ej strålen.

Laser-notis

Denna skrivare är i USA certifierad att motsvara kraven i DHHS 21 CFR, underparagraf J för laserprodukter av Klass I (1). I andra länder uppfyller skrivaren kraven för laserprodukter av Klass I enligt kraven i IEC 60825-1.

Laserprodukter i Klass I anses ej hälsovådliga. Skrivaren har en inbyggd laser av Klass IIIb (3b) som består av en laserenhet av gallium-arsenid på 5 milliwatt som arbetar i våglängdsområdet 770-795 nanometer. Lasersystemet och skrivaren är utformade så att det aldrig finns risk för att någon person utsätts för laserstrålning över Klass I-nivå vid normal användning, underhåll som utförs av användaren eller annan föreskriven serviceåtgärd.

Laser-melding

Skriveren er godkjent i USA etter kravene i DHHS 21 CFR, underkapittel J, for klasse I (1) laserprodukter, og er i andre land godkjent som et Klasse I-laserprodukt i samsvar med kravene i IEC 60825-1.

Klasse I-laserprodukter er ikke å betrakte som farlige. Skriveren inneholder internt en klasse IIIb (3b)-laser, som består av en gallium-arsenlaserenhet som avgir stråling i bølgelengdeområdet 770-795 nanometer. Lasersystemet og skriveren er utformet slik at personer aldri utsettes for laserstråling ut over klasse I-nivå under vanlig bruk, vedlikehold som utføres av brukeren, eller foreskrevne serviceoperasjoner.

Avís sobre el Làser

Segons ha estat certificat als Estats Units, aquesta impressora compleix els requisits de DHHS 21 CFR, apartat J, pels productes làser de classe I (1), i segons ha estat certificat en altres llocs, és un producte làser de classe I que compleix els requisits d'IEC 60825-1.

Els productes làser de classe I no es consideren perillosos. Aquesta impressora conté un làser de classe IIIb (3b) d'arseniür de gal.li, nominalment de 5 mil.liwats, i funciona a la regió de longitud d'ona de 770-795 nanòmetres. El sistema làser i la impressora han sigut concebuts de manera que mai hi hagi exposició a la radiació làser per sobre d'un nivell de classe I durant una operació normal, durant les tasques de manteniment d'usuari ni durant els serveis que satisfacin les condicions prescrites.

Japanese Laser Notice

レーザーに関するお知らせ

このプリンターは、米国ではＤＨＨＳ ２１ ＣＦＲサブチャプターＪのクラスＩ（１）の基準を満たしたレーザー製品であることが証明されています。また米国以外ではＩＥＣ ８２５の基準を満たしたクラスＩのレーザー製品であることが証明されています。

クラスＩのレーザー製品には危険性はないと考えられています。このプリンターはクラスⅢｂ（３ｂ）のレーザーを内蔵しています。このレーザーは、波長が７７０ ～ ７９５ナノメーターの範囲で、通常５ミリワットのガリウム砒化物を放射するレーザーです。このレーザーシステムとプリンターは、通常の操作、ユーザのメンテナンス、規定された修理においては、人体がクラスＩのレベル以上のレーザー放射に晒されることのないよう設計されています。

Chinese Laser Notice

注意：

本打印机被美国认证合乎 DHHS 21 CFR Subchapter I 对分类 I (1) 激光产品的标准，而在其他地区则被认证合乎 IEC 825 的标准。

分类 I 激光产品一般认为不具危险性，本打印机内部含有分类 IIIb (3b) 的激光，在操作过程中会产生 5 毫瓦含镓及砷的微量激光，其波长范围在 770-795 nm 之间。本激光系统及打印机的设计，在一般操作、使用者维护或规定内的维修情况下，不会使人体接触分类 I 以上等级的辐射。

Korean Laser Notice

본프린터는 1등급 레이저 제품들에 대한 DHHS 21 CFR Subchapter 3의 규정을 준수하고 있음을 미국에서 인증받았으며, 그외의 나라에서도 IEC 825 규정을 준수하는 1등급 레이저 제품으로서 인증을 받았습니다.

1등급 레이저 제품들은 안전한 것으로 간주됩니다. 본 프린터는 5 밀리와트 갤륨 아르세나이드 레이저로서 770-795 나노미터의 파장대에서 활동하는 Class III (3b) 레이저를 내부에 갖고 있습니다. 본 레이저 시스템과 프린터는 정상 작동 중이나 유지 보수 중 또는 규정된 서비스 상태에서 상기의 Class I 수준의 레이저 방출에 사람이 절대 접근할 수 없도록 설계되어 있습니다.

Safety Information

- The safety of this product is based on testing and approvals of the original design and specific components. The manufacturer is not responsible for safety in the event of use of unauthorized replacement parts.
- The maintenance information for this product has been prepared for use by a professional service person and is not intended to be used by others.
- There may be an increased risk of electric shock and personal injury during disassembly and servicing of this product. Professional service personnel should understand this and take necessary precautions.

Consignes de Sécurité

- La sécurité de ce produit repose sur des tests et des agréations portant sur sa conception d'origine et sur des composants particuliers. Le fabricant n'assume aucune responsabilité concernant la sécurité en cas d'utilisation de pièces de rechange non agréées.
- Les consignes d'entretien et de réparation de ce produit s'adressent uniquement à un personnel de maintenance qualifié.
- Le démontage et l'entretien de ce produit pouvant présenter certains risques électriques, le personnel d'entretien qualifié devra prendre toutes les précautions nécessaires.

Norme di sicurezza

- La sicurezza del prodotto si basa sui test e sull'approvazione del progetto originale e dei componenti specifici. Il produttore non è responsabile per la sicurezza in caso di sostituzione non autorizzata delle parti.
- Le informazioni riguardanti la manutenzione di questo prodotto sono indirizzate soltanto al personale di assistenza autorizzato.
- Durante lo smontaggio e la manutenzione di questo prodotto, il rischio di subire scosse elettriche e danni alla persona è più elevato. Il personale di assistenza autorizzato, deve, quindi, adottare le precauzioni necessarie.

Sicherheitshinweise

- Die Sicherheit dieses Produkts basiert auf Tests und Zulassungen des ursprünglichen Modells und bestimmter Bauteile. Bei Verwendung nicht genehmigter Ersatzteile wird vom Hersteller keine Verantwortung oder Haftung für die Sicherheit übernommen.
- Die Wartungsinformationen für dieses Produkt sind ausschließlich für die Verwendung durch einen Wartungsfachmann bestimmt.
- Während des Auseinandernehmens und der Wartung des Geräts besteht ein zusätzliches Risiko eines elektrischen Schlags und körperlicher Verletzung. Das zuständige Fachpersonal sollte entsprechende Vorsichtsmaßnahmen treffen.

Pautas de Seguridad

- La seguridad de este producto se basa en pruebas y aprobaciones del diseño original y componentes específicos. El fabricante no es responsable de la seguridad en caso de uso de piezas de repuesto no autorizadas.
- La información sobre el mantenimiento de este producto está dirigida exclusivamente al personal cualificado de mantenimiento.
- Existe mayor riesgo de descarga eléctrica y de daños personales durante el desmontaje y la reparación de la máquina. El personal cualificado debe ser consciente de este peligro y tomar las precauciones necesarias.

Informações de Segurança

- A segurança deste produto baseia-se em testes e aprovações do modelo original e de componentes específicos. O fabricante não é responsável pela segunrança, no caso de uso de peças de substituição não autorizadas.
- As informações de segurança relativas a este produto destinam-se a profissionais destes serviços e não devem ser utilizadas por outras pessoas.
- Risco de choques eléctricos e ferimentos graves durante a desmontagem e manutenção deste produto. Os profissionais destes serviços devem estar avisados deste facto e tomar os cuidados necessários.

Informació de Seguretat

- La seguretat d'aquest producte es basa en l'avaluació i aprovació del disseny original i els components específics. El fabricant no es fa responsable de les qüestions de seguretat si s'utilitzen peces de recanvi no autoritzades.
- La informació pel manteniment d’aquest producte està orientada exclusivament a professionals i no està destinada a ningú que no ho sigui.
- El risc de xoc elèctric i de danys personals pot augmentar durant el procés de desmuntatge i de servei d’aquest producte. El personal professional ha d’estar-ne assabentat i prendre les mesures convenients.

안전 사항

- 본 제품은 원래 설계 및 특정 구성품에 대한 테스트 결과 안전성이 입증된 것입니다. 따라서 무허가 교체 부품을 사용하는 경우에는 제조업체에서 안전에 대한 책임을 지지 않습니다.

- 본 제품에 관한 유지 보수 설명서는 전문 서비스 기술자 용으로 작성된 것이므로 비 전문가는 사용할 수 없습니다.

- 본 제품을 해체하거나 정비할 경우 전기적인 충격을 받거나 상처를 입을 위험이 커집니다. 전문 서비스 기술자는 이 사실을 숙지하고 필요한 예방 조치를 취하도록 하십시오.

安全资讯

- 本产品的安全性以原来设计和特定产品的测试结果和认证为基础。万一使用未经许可的替换部件，制造商不对安全性负责。
- 本产品在拆卸、维修的时候，遭受电击或人员受伤的危险性会增高，专业服务人员对这点必须有所了解，并采取必要的预防措施。
- 有些零件的安全功能可能不明显。因此，所替换零件的性能一定要与原有的零件一致。

Preface

This manual contains maintenance procedures for service personnel. It is divided into the following chapters:

1. **General Information** contains a general description of the printer and the maintenance approach used to repair it. Special tools and test equipment are listed in this chapter, as well as general environmental and safety instructions.
2. **Diagnostic Information** contains an error indicator table, symptom tables, and service checks used to isolate failing field replaceable units (FRUs).
3. **Diagnostic Aids** contains tests and checks used to locate or repeat symptoms of printer problems.
4. **Repair Information** provides instructions for making printer adjustments and removing and installing FRUs.
5. **Locations** uses illustrations and tables to identify the locations and test points on the printer.
6. **Preventive Maintenance** contains the lubrication specifications and recommendations to prevent problems.
7. **Parts Catalog** contains illustrations and part numbers for individual FRUs.

1. General Information

The IBM™ Infoprint 1222(n) laser printer is a monochrome laser printer designed for single users or small workgroups. There are two models:

- The Infoprint 1222 Base printer, with 16MB of memory standard, a parallel port, and a USB port.
- The Infoprint 1222 Network printer, with 32MB of memory standard, an integrated Ethernet adapter, a parallel port, and a USB port.

The purpose of this chapter is to provide an overview of the capabilities of the printer and available options for each of the Infoprint 1222 models.

Note: Unless otherwise noted, all references to the IBM Infoprint 1222(n) laser printer are intended to refer equally to both the Infoprint 1222 Base and the Infoprint 1222 Network models.

Maintenance Approach

The diagnostic information in this manual leads you to the correct field replaceable unit (FRU) or part. Use the error code charts, symptom index, and service checks to determine the symptom and repair the failure. See **“Diagnostic Information” on page 2-1**, for the location of each section. See the **“Repair Information” on page 4-1** to help identify parts. After completing the repair, perform tests as needed to verify the repair.

Special Tools

Long Phillips screwdriver (approximately 6–inch shank)
Slotted screwdriver
Small Phillips screwdriver

When taking voltage readings, always use the printer frame as ground unless another ground is specified.

Serial Number

Look for the serial number label on the inside front cover of the printer.

Printer Identification

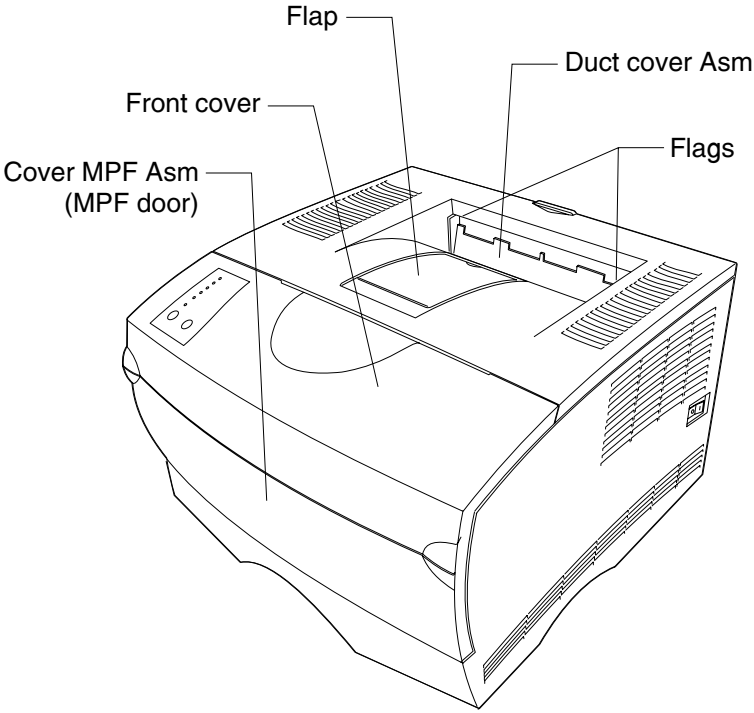

Printer Features

Memory and User Flash Memory

Each model has a standard amount of memory (RAM) soldered on the system card, and a certain number of 100-pin DIMM slots available for installing additional memory or user flash memory options.

Memory	Base Model	Network Model
Standard memory	16MB	32MB
Standard flash memory	None	None
Memory options		
• 8MB DIMM	✓	✓
• 16MB DIMM	✓	✓
• 32MB DIMM	✓	✓
• 64MB DIMM	✓	✓
• 128MB DIMM	✓	✓
Maximum # of memory DIMM	2	2
Maximum possible memory	272MB	288MB
Flash memory options		
• 2MB DIMM		
• 4MB DIMM	✓	✓
• 8MB DIMM	✓	✓
• 16MB DIMM	✓	✓
	✓	✓
Maximum # of flash memory DIMMs	1	1
Maximum possible flash memory	16MB	16MB

Note: ✓ Indicates option is supported.

Resolution and Print Quality

Note:

- IET, PQET, PictureGrade™, print resolution, print darkness, and toner saver can all be set independently of each other through the data stream.
- Control panel menus allow a user to independently set PQET, PictureGrade, and print resolution.
- The IET setting is implicitly selected when a particular print resolution is selected using the Quality Menu.
- Toner saver and print darkness settings are implicitly set when a particular toner darkness is selected using the Quality Menu.

Print Quality Setting	Base Model	Network Model
Print resolution:		
• 300 dpi	✓	✓
• 600 dpi	✓	✓
• 1200 IQ dpi	✓	✓
Image Enhancement Technology (IET):		
2 Bits/Pel	✓	✓
PQET	✓	✓
Toner saver	✓	✓
Print darkness	✓	✓
PictureGrade	✓	✓

Note: ✓ Indicates print quality setting is supported.

Print Area

The following print area settings are available.

Print Area Option	Base Model	Network Model
Normal	✓	✓
Fit to page	✓	✓
Edge to edge	✓	✓

Print Media

The following table shows the supported media, media weights and media textures which together are used to select a technology operating point to provide optimal print quality across a variety of media.

Media	Base Model	Network Model
Media Operating Points		
Paper	✓	✓
Card stock	✓	✓
Transparency	✓	✓
Labels	✓	✓
Envelope	✓	✓
Cotton paper	✓	✓
Bond	✓	✓
Media Weights		
Heavy	✓	✓
Normal	✓	✓
Light	✓	✓
Media Textures		
Rough	✓	✓
Normal	✓	✓
Smooth	✓	✓

Note: ✓ Indicates media is supported.

Printer Data Streams

Data Streams	Base Model	Network Model
PCL 6 emulation	✓	✓
PostScript Level 2 emulation	✓	✓
PPDS	✓	✓

Note: ✓ Indicates data stream is supported.

- PCL 6 emulation includes the PCL 5e and PCL XL interpreters, and is fully compatible with Hewlett Packard's LaserJet 5 Family. Furthermore, the printer PCL emulation is backward compatible with the Optra™ T 610/612/614/616 and other members of Lexmark's Optra family of laser printers.
- 4922–00x supports version 3010 of the Adobe definition of PostScript 3, and the interpreter is backward compatible with the Optra T 610/612/614/616 and other members of Lexmark's Optra family of laser printers.
- PPDS is backward compatible with Optra T 610/612/614/616 and Lexmark's Optra family of laser printers. The PPDS interpreter is inactive as a factory default. It must be activated using a PJL command or operator panel operation before it can be used.

Fonts

Fonts / Options	Base Model	Network Model
PCL bitmapped	2	2
PCL scalable	90	90
PS scalable	89	89
PPDS bitmapped	5	5
PPDS scalable	39	39

Paper Handling

Paper Handling	Base Model	Network Model
Standard		
Standard input sources:	2	2
• Integrated 250–sheet tray The 250 sheet drawer supports the following sizes: A4, A5, JIS B5, folio, letter, legal, executive, and statement.	1	1
• Multipurpose feeder	1	1
Standard output destination	1	1
• 150–sheet sensing bin	1	1
Standard duplex	✓	✓
Envelope conditioning	✓	✓

Paper Handling	Base Model	Network Model
Universal paper size • Minimum bitmap width and length • Maximum bitmap width • Maximum bitmap length	✓ 64800 183600 306000	✓ 64800 183600 306000
Options		
Maximum # of optional drawers	1	1
Optional drawers: • 250–sheet drawer • 500–sheet drawer The 500 sheet drawer supports the following sizes: A4, JIS B5, folio, letter, legal, and executive.	 ✓ ✓	 ✓ ✓
Maximum # of media input sources	3	3
Maximum input sheet capacity (excluding envelopes)	850	850
Maximum sheet capacity (excluding envelopes)	150	150

Note: ✓ Indicates associated capability is supported.
Assumes 20 lb xerographic paper.

Connectivity

Attachments	Base Model	Network Model
Standard parallel interface Parallel interface connector is a 1284–B connector.	✓	✓
Parallel mode 2	✓	✓
Standard USB interface	✓	✓
Standard Ethernet 10/ 100 Base–TX	✗	✓

Note:

✓ Indicates attachment is part of the model factory shipped configuration.

✗Indicates attachment is not part of the model factory shipped configuration.

Printer Speed

Speed	Base Model	Network Model
Pages/minute in 300 dpi	22	22
Pages/minute in 600 dpi	22	22
Pages/minute in 1200 Image Quality	22	22
Time to first print	10 seconds	10 seconds
Automatic power saver	8	8

RIP Card Specifications

Feature	Base Model	Network Model
Processor	922T	922T
Processor/Bus frequency	200/100 MHz	200/100 MHz
Synchronous DRAM	2–64 Mbit	2–128 Mbit
NAND flash	1–64 Mbit	1–64 Mbit
Processor internal bus width capability	32 Bit	32 Bit
RIP SRAM	0KB	0KB
L1 Cache (instruction/ data)	8KB / 8KB	8KB / 8KB

Supplies

Print Cartridge	Average Yield	Approximate Coverage
*Pre*bate™ print cartridges	5,000 10,000	5% 5%
Regular cartridges (without Prebate terms and conditions)	5,000 10,000	5% 5%

Operator Panel

The 4922–00x operator panel consists of six light's and two buttons. The operator panel is used to indicate status as well as an input to modify some printer settings. All models have the same operator panel.

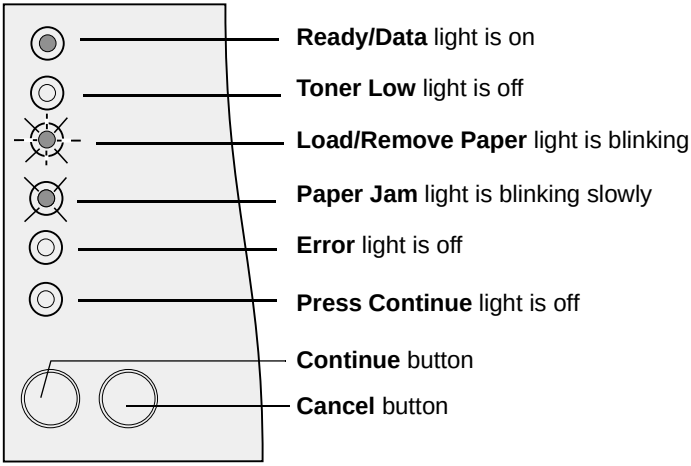

Note: Printer settings such as paper source, paper size, and orientation may not be selected or modified by the operator panel. Instead, users must utilize an application print driver and/or the printer toolkit to modify settings through the host computer. A printer settings page can be printed by briefly pressing **Continue** when only the **Ready/Data** light is on.

Options

See **“Options” on page 7-22** for a list of options available for the Infoprint 1222(n) printer.

Acronyms

C	Charge Roll
CCW	Counterclockwise
CW	Clockwise
DC	Direct Current
DEV	Developer Roll
DIMM	Dual Inline Memory Module
DRAM	Dynamic Random Access Memory
FRU	Field Replaceable Unit
GND	Ground
HVPS	High Voltage Power Supply
IDE	Integrated Development Environment
IET	Image Enhancement Technology
INA	Internal Network Adapter
KB	Kilobyte
LED	Light–Emitting Diode
LSU	Laser Scanning Unit
LVPS	Low Voltage Power Supply
MHz	Megahertz
MPF	Multipurpose Feeder
NAND	Not And (Gate)
NVRAM	Nonvolatile Random Access Memory
PCB	Printed Circuit Board
PCL 6	Printer Command Language
PJL	Printer Job Language
POR	Power–On Reset
POST	Power–On Self Test
PPDS	Personal Printer Data Stream
PQET	Print Quality Enhancement Technology
PS	PostScript
PWB	Printed Wiring Board
RIP	Raster Image Processor
ROM	Read Only Memory
RS	Recommended Standard
T	Transfer (Roll)
TAR	Toner Adder Roll
USB	Universal Serial Bus
V ac	Volts Alternating Current

2. Diagnostic Information

Start

CAUTION: Remove power from the printer before connecting or disconnecting any cable, assembly, or electronic card. This is a precaution for personal safety and to prevent damage to the printer.

This chapter contains the codes and diagnostic tools to aid in providing corrective action for a malfunctioning printer.

The lights on the operator panel indicate the status of the printer anytime it is powered on. When the printer experiences a problem requiring operator intervention, it indicates the source by blinking one or more lights. See **“Status Information Light Patterns” on page 2-3** for more information. When all six lights blink simultaneously, a service may need to be performed. See **“Service Error Codes” on page 2-11** for more information.

If the printer does not indicate a service error code nor complete POST without an error but there is a symptom, see **“Symptom Tables” on page 2-23** for more information.

Operator Panel

The 4922–00x operator panel consists of six indicator lights and two buttons.

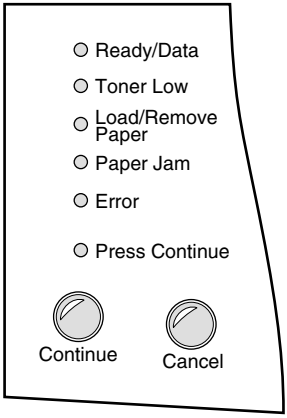

Note: Traditional printer settings such as paper source, paper size, and orientation may not be selected or modified using the operator panel. Users must either utilize an application print driver and/or the printer toolkit to modify settings.

The operator panel may be used for:

- Determining printer status (See **“Status Information Light Patterns” on page 2-3** for more information.)
- Reviewing printer settings (See **“Power–On Self Test (POST)” on page 2-23** for more information.)
- Changing printer settings (See **“Power–On Operations” on page 2-22** for more information.)
- Utilizing diagnostic tools (See **“Power–On Operations” on page 2-22** for more information.)
- Obtaining information about printer service errors (See **“Service Error Codes” on page 2-11** for more information.)

Light Patterns

The following symbols are used in the status, attendance, and service information tables.

❍ Light is off.
● Light is on solid.
✳ Light is blinking.
× Light is blinking slowly.

Status Information Light Patterns

Ready/Data	Toner Low	Load/Remove Paper	Paper Jam	Error	Press Continue	Status
●	❍	❍	❍	❍	❍	Ready
●	❍	❍	❍	❍	✳	Demo Ready
×	❍	❍	❍	❍	❍	Hex Trace Ready
✳	❍	❍	❍	❍	❍	Busy
●	❍	❍	❍	❍	●	Waiting
●	●	❍	❍	❍	❍	Ready, with Toner Low Warning
●	●	❍	❍	❍	✳	Demo Ready, with Toner Low Warning
×	●	❍	❍	❍	❍	Hex Trace Ready, with Toner Low Warning
✳	●	❍	❍	❍	❍	Busy, with Toner Low Warning
●	●	❍	❍	❍	●	Waiting, with Toner Low Warning
✳	❍	❍	❍	✳	❍	Flushing

Ready/Data	Toner Low	Load/Remove Paper	Paper Jam	Error	Press Continue	Status
●	●	●	●	●	●	Canceling Job/Resetting Printer/Activating Changes
All lights cycling						Restarting Printer
❍	❍	●	●	❍	❍	Diagnostics–Memory Test
●	●	●	❍	❍	❍	Programming System Code–DO NOT POWER OFF **Note:** The **Error** and **Press Continue** lights cycle through four different patterns to indicate progress during programming.
✳	✳	✳	❍	❍	❍	Programming System Code Partially Complete–Download System Code Data
●	❍	❍	❍	●	❍	Invalid Engine Code/Invalid Network Code **Note:** A double press of **Continue**, causes a secondary light pattern which indicates further information on the type of invalid code status exists. See **"Invalid Code Secondary Light Patterns" on page 2-5**.

Invalid Code Secondary Light Patterns

Ready/Data	Toner Low	Load/Remove Paper	Paper Jam	Error	Press Continue	Status
●	❍	●	❍	●	❍	Invalid Engine Code
●	❍	✳	❍	●	❍	Invalid Network Code

Attendance Information Light Patterns

Ready/Data	Toner Low	Load/Remove Paper	Paper Jam	Error	Press Continue	Attendance Condition
❍	❍	●	❍	❍	●	Load Paper–Tray 1, Tray 2 or MPF
❍	❍	✳	❍	❍	●	Load Paper–Manual Feed
❍	❍	●	❍	❍	✳	Load Paper–Tray 1 for Side 2 Manual Duplex
❍	❍	●	❍	❍	❍	Remove Paper from Output Bin
❍	❍	●	❍	●	❍	Insert Tray 1
❍	❍	❍	❍	●	❍	Top Cover Open/Cartridge Missing
❍	✳	❍	❍	●	❍	Defective or Unsupported Print Cartridge
❍	✳	❍	❍	✳	❍	Change Cartridge–Invalid Refill

Ready/Data	Toner Low	Load/Remove Paper	Paper Jam	Error	Press Continue	Attendance Condition
❍	●	❍	❍	❍	●	Toner Low Intervention
❍	❍	❍	❍	❍	●	Offline
❍	❍	❍	●	❍	●	Paper Jam **Note:** A double press of **Continue** causes a secondary light pattern which indicates further information on the type of paper jam. See **"Paper Jam Secondary Light Patterns" on page 2-7**.
❍	❍	❍	❍	●	●	Printer Error **Note:** A double press of **Continue** causes a secondary light pattern which indicates further information on the type of printer error. See **"Printer Error Secondary Light Patterns" on page 2-8**.

Paper Jam Secondary Light Patterns

Ready/Data	Toner Low	Load/Remove Paper	Paper Jam	Error	Press Continue	Attendance Condition
●	❍	❍	●	❍	●	Paper Jam–Input Sensor
❍	●	❍	●	❍	●	Paper Jam–Exit Sensor
❍	❋	❍	●	❍	●	Paper Jam–Duplex Sensor
❍	❍	●	●	❍	●	Paper Jam–Fuser Exit Sensor
❋	❍	❍	●	❍	●	Paper Jam–Multipurpose Feeder Sensor

Printer Error Secondary Light Patterns

To obtain the secondary light pattern, quickly press **Continue** twice.

Ready/Data	Toner Low	Load/Remove Paper	Paper Jam	Error	Press Continue	Attendance Condition
●	❍	❍	❍	●	●	Complex Page
❍	●	❍	❍	●	●	Insufficient Collation Area
❍	❍	●	❍	●	●	Defective Flash
❍	❍	❍	●	●	●	Network Interface Error
✳	❍	❍	❍	●	●	Resource Save Off–Deficient Memory
❍	✳	❍	❍	●	●	PPDS Font Error
❍	❍	✳	❍	●	●	Insufficient Defrag Memory
❍	❍	❍	✳	●	●	ENA Connection Lost
●	●	❍	❍	●	●	Memory Full
●	❍	●	❍	●	●	Short Paper
●	❍	❍	●	●	●	Flash Full
❍	●	●	❍	●	●	Too Many Flash Options
❍	●	❍	●	●	●	Engine Code Failure

Service Information Light Patterns

Ready/Data	Toner Low	Load/Remove Paper	Paper Jam	Error	Press Continue	Service Condition
*	*	*	*	*	*	Service Error **Note:** A double press of **Continue** causes a secondary light pattern which indicates further information on the type of printer error. See **"Service Error Codes" on page 2-11** for more information.

Service Error Secondary Light Patterns

Quickly press and release **Continue** twice to obtain the secondary light pattern.

Ready/Data	Toner Low	Load/Remove Paper	Paper Jam	Error	Press Continue	Service Condition
❋	❍	❍	❍	❍	❍	Software Error (90x)
❋	❍	❍	❍	❍	❋	DC Motor (Main Drive) Error (91x)
❋	❍	❍	❍	❋	❍	Fuser/Toner Sensor Error (92x)
❋	❍	❍	❍	❋	❋	Printhead / Transport Motor Error (93x)
❋	❍	❍	❋	❍	❋	NVRAM / ROM / NAND Error (95x)
❋	❍	❍	❋	❋	❍	RAM Memory Error (96x)
❋	❍	❍	❋	❋	❋	Network Error (97x)
❋	❍	❋	❍	❍	❍	Paper Port Communication Error (98x)

Note: There are many tertiary codes following these secondary codes. The following pages show these codes.

Obtaining Information about Printer Service Error Codes

All lights flashing simultaneously on the panel designates a printer service error as a primary code. Double press **Continue** to see the secondary codes; double press **Continue** again to see the tertiary codes; double press **Continue** the third time to return to the primary code.

All secondary codes have a flashing **Ready/Data** light but not the **Toner Low** light. All tertiary codes have a flashing **Toner Low** light but not a **Ready/Data** light.

All lights flashing simultaneously, as a result of sending data to the printer, may indicate a code problem. Call Lexmark Customer Service at 1–800–539–6275 for assistance.

Service Error Codes

Service error codes are generally non–recoverable except in an intermittent condition when you can POR the printer to temporarily recover from the error condition.

RIP Software Error / Illegal Trap

Contact the next level of support or call Lexmark 1–800–539–6275 for assistance.

Primary Code	Secondary Code	Tertiary Codes
✸ Ready/Data	✸ Ready/Data	◎ Ready/Data
✸ Toner Low	◎ Toner Low	✸ Toner Low
✸ Load/ Remove Paper	◎ Load/ Remove Paper	◎ Load/ Remove Paper
✸ Paper Jam	◎ Paper Jam	◎ Paper Jam
✸ Error	◎ Error	◎ Error
✸ Press Continue	◎ Press Continue	◎ Press Continue

Note: The alarm is not actuated for this error.

Engine Software Error

This error indicates an unrecoverable engine software error. Replace the RIP card.

Primary Code	Secondary Code	Tertiary Codes
✸ Ready/Data	✸ Ready/Data	◎ Ready/Data
✸ Toner Low	◎ Toner Low	✸ Toner Low
✸ Load/ Remove Paper	◎ Load/ Remove Paper	◎ Load/ Remove Paper
✸ Paper Jam	◎ Paper Jam	◎ Paper Jam
✸ Error	◎ Error	✸ Error
✸ Press Continue	◎ Press Continue	◎ Press Continue

Note: If the alarm control is turned on, the alarm does sound when this error occurs.

Transfer Roll Error

Indicates a problem in the transfer roll area. See the **“Transfer Roll Service Check” on page 2-37** for more information.

Primary Code	Secondary Code	Tertiary Codes
✸ Ready/Data	✸ Ready/Data	◎ Ready/Data
✸ Toner Low	◎ Toner Low	✸ Toner Low
✸ Load/ Remove Paper	◎ Load/ Remove Paper	◎ Load/ Remove Paper
✸ Paper Jam	◎ Paper Jam	✸ Paper Jam
✸ Error	◎ Error	✸ Error
✸ Press Continue	✸ Press Continue	✸ Press Continue

Note: If the alarm control is turned on, the alarm does sound when this error occurs.

Fuser Error

Indicates a problem with the fuser. See the **“Fuser Service Check” on page 2-31** for more information.

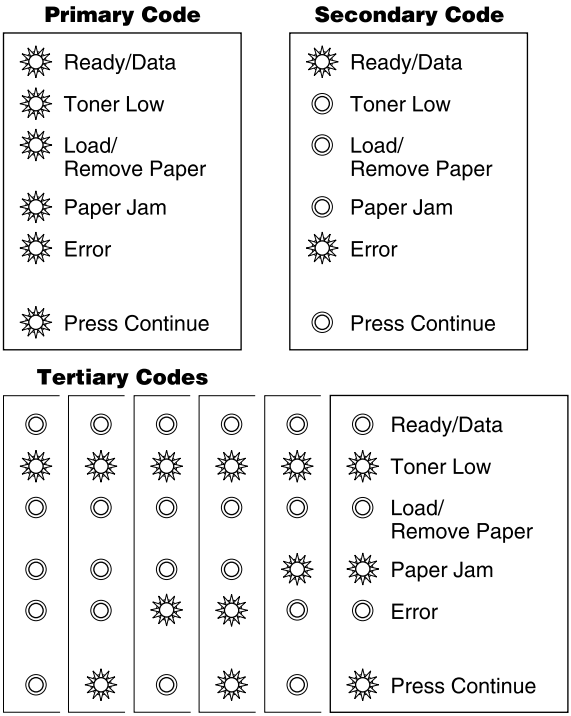

Note: If the alarm control is turned on, the alarm does sound when this error occurs.

Toner Sensor Error

Indicates a problem with either the toner sensor or print cartridge.

Primary Code	Secondary Code	Tertiary Codes
✸ Ready/Data	✸ Ready/Data	◎ Ready/Data
✸ Toner Low	◎ Toner Low	✸ Toner Low
✸ Load/ Remove Paper	◎ Load/ Remove Paper	✸ Load/ Remove Paper
✸ Paper Jam	◎ Paper Jam	◎ Paper Jam
✸ Error	✸ Error	◎ Error
✸ Press Continue	◎ Press Continue	✸ Press Continue

Note: If the alarm control is turned on, the alarm does sound when this error occurs.

Printhead Error

Indicates a problem with the printhead. Check cables to the printhead. Replace the printhead as necessary. See **“Printhead Assembly Adjustment” on page 4-2** for realignment procedures.

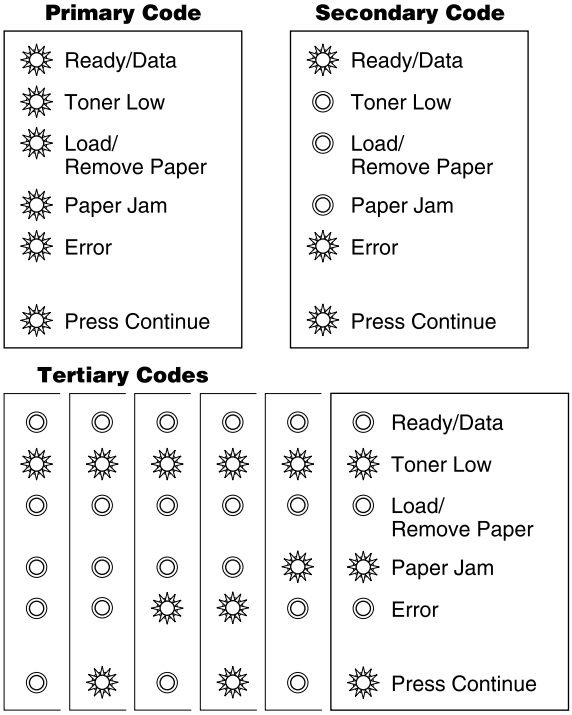

Note: If the alarm control is turned on, the alarm does sound when this error occurs.

Transport Motor Error

Indicates a problem with the main drive motor system. The problem could be the motor, the RIP card, the cabling or the drive assembly. Check the cable connectors. The tertiary code below, with four flashing lights indicates a problem in the drive assembly.

Primary Code	Secondary Code	Tertiary Codes	
✸ Ready/Data	✸ Ready/Data	◎	◎ Ready/Data
✸ Toner Low	◎ Toner Low	✸	✸ Toner Low
✸ Load/ Remove Paper	◎ Load/ Remove Paper	◎	◎ Load/ Remove Paper
✸ Paper Jam	◎ Paper Jam	✸	✸ Paper Jam
✸ Error	✸ Error	✸	✸ Error
✸ Press Continue	✸ Press Continue	◎	✸ Press Continue

Note: If the alarm control is turned on, the alarm does sound when this error occurs.

NVRAM Failure

This lighting sequence indicates a problem in the NVRAM. Replace the RIP card assembly.

Primary Code	Secondary Code	Tertiary Codes	
☼ Ready/Data	☼ Ready/Data	◎	◎ Ready/Data
☼ Toner Low	◎ Toner Low	☼	☼ Toner Low
☼ Load/ Remove Paper	◎ Load/ Remove Paper	◎	◎ Load/ Remove Paper
☼ Paper Jam	☼ Paper Jam	◎	☼ Paper Jam
☼ Error	◎ Error	☼	◎ Error
☼ Press Continue	☼ Press Continue	☼	◎ Press Continue

Note:

- If the alarm control is turned on, the alarm does sound when this error occurs.
- Always check printhead alignment after replacing the RIP card assembly. See **“Printhead Assembly Adjustment” on page 4-2** for hardware alignment of the printhead.

RIP Card Error (ROM / NAND)

Indicates a failed RIP card assembly. Replace the RIP card.

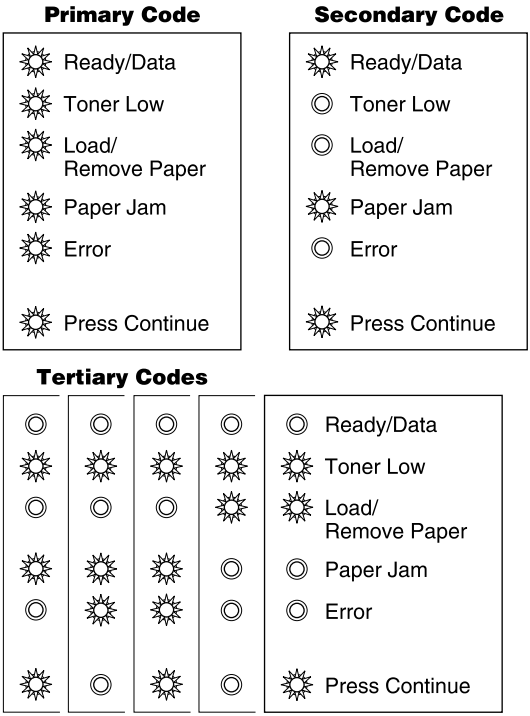

Note:

- The alarm is not activated for this error.
- Always check printhead alignment after replacing the RIP card assembly. See **"Printhead Assembly Adjustment" on page 4-2** for hardware alignment of the printhead.

RAM Memory Error

This error indicates RAM failure. Remove DIMM(s) and re–POR the printer. If the error persists, replace the card. If the error subsides, check each DIMM independently. Replace faulty DIMM.

Primary Code

✸	Ready/Data
✸	Toner Low
✸	Load/ Remove Paper
✸	Paper Jam
✸	Error
✸	Press Continue

Secondary Code

✸	Ready/Data
◎	Toner Low
◎	Load/ Remove Paper
✸	Paper Jam
✸	Error
◎	Press Continue

Tertiary Codes

◎	◎	◎	◎	Ready/Data
✸	✸	✸	✸	Toner Low
◎	◎	◎	◎	Load/ Remove Paper
◎	◎	◎	◎	Paper Jam
◎	◎	✸	✸	Error
◎	✸	◎	✸	Press Continue

Note: The alarm is not activated for this error.

Network Error

Indicates an error in the network circuitry. Replace the RIP card assembly.

Primary Code

✹	Ready/Data
✹	Toner Low
✹	Load/ Remove Paper
✹	Paper Jam
✹	Error
✹	Press Continue

Secondary Code

✹	Ready/Data
◎	Toner Low
◎	Load/ Remove Paper
✹	Paper Jam
✹	Error
✹	Press Continue

Tertiary Codes

◎	◎	◎	◎	◎	◎	◎	◎	◎	◎	Ready/Data
✹	✹	✹	✹	✹	✹	✹	✹	✹	✹	Toner Low
◎	◎	◎	◎	◎	◎	◎	◎	✹	✹	Load/ Remove Paper
◎	◎	◎	◎	✹	✹	✹	✹	◎	◎	Paper Jam
◎	◎	✹	✹	◎	◎	✹	✹	◎	◎	Error
◎	✹	◎	✹	◎	✹	◎	✹	◎	✹	Press Continue

Note:

- If the alarm control is turned on, the alarm does sound when this error occurs.
- Always check printhead alignment after replacing the RIP card assembly. See **"Printhead Assembly Adjustment" on page 4-2** for hardware alignment of the printhead.

Paper Port Communication Failure

Indicates an error communicating with tray 2, if installed. Remove tray 2 and recheck. If the error doesn't recur, replace tray 2. If the error recurs replace the RIP card assembly.

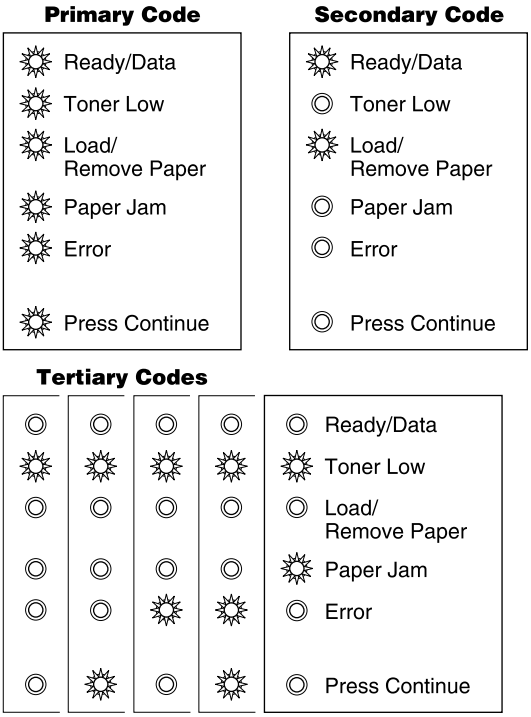

Note: Always check printhead alignment after replacing the RIP card assembly. See **"Printhead Assembly Adjustment" on page 4-2** for hardware alignment of the printhead.

Power–On Operations

To access the printer operations for the 4922:

1. Turn off the printer.
2. Press and hold the buttons in the following table for the operation needed.
3. Turn on the printer.

   Hold the buttons until the lights cycle on the operator panel.

Operation	Power–on action
Enter Configuration Menu mode	1. Power on with top cover open and **Continue** pressed. 2. Close cover once the error light is displayed.
Print the Print Quality test pages	Top cover open with **Continue** pressed. (Cartridge Lockout function enabled)
Enter Diagnostics mode	1. Power on with top cover open and **Cancel** pressed. 2. Close cover once the error light is displayed.
Print the Print Quality test pages	Top cover open with **Cancel** pressed. (Cartridge Lockout function disabled)
Reset NVRAM and enter Normal mode	1. Power on with top cover open and both **Continue** and **Cancel** buttons pressed. 2. Close cover once the error light is displayed.

Power–On Self Test (POST)

When you turn the printer on, it performs a Power–On Self Test. Check for correct POST functioning of the base printer by observing the following symptoms:

Symptom Tables

POST Symptom Table

Symptom	Action
The main motor, cooling fan and fuser do not come on.	See the **“Cover Interlock Switch Service Check” on page 2-27**.
POST completes except one or more lights do not come on.	See the **“Operator Panel Service Check” on page 2-35**.
None of the lights come on.	See the **“Operator Panel Service Check” on page 2-35**.
Main motor does not come on.	See the **“Main Motor Service Check” on page 2-34**.
Fan does not come on.	See the **“Cooling Fan Service Check” on page 2-26**.
Fuser lamp does not come on.	See the **“Cold Fuser Service Check” on page 2-32**.
Fuser lamp never turns off.	See the **“Hot Fuser Service Check” on page 2-34**.
The paper feed picks and tries to feed paper.	See the **“Paper Feed Service Checks” on page 2-38**.

Printer Symptom Table

Symptom	Action
Dead machine (no power)	See **“Dead Machine Service Check” on page 2-30**.
Fan noisy or not working	See **“Cooling Fan Service Check” on page 2-26**.
Fuser parts melted	See **“Hot Fuser Service Check” on page 2-34**.
Fuser lamp doesn’t light	See **“Cold Fuser Service Check” on page 2-32**.
Toner not fused to the paper	See **“Poor Fusing of Image” on page 2-50**.
Blank page	See **“Blank Page” on page 2-45**.
Black page	See **“Black Page” on page 2-47**.
Heavy background	See **“Heavy Background” on page 2-48**.
Light print	See **“Light Print” on page 2-50**.
White or black lines or bands	See **“White or Black Lines or Bands” on page 2-51**.
Toner on back of page	See **“Toner on Back of Page” on page 2-51**.
Paper jams	See **“Paper Feed Service Checks” on page 2-38**.
Main motor noisy or does not move	See **“Main Motor Service Check” on page 2-34**.
Paper never picks	See **“Paper Never Picks” on page 2-42**.
Paper feeds continuously	See **“Paper Picks During POST and/or Continuously” on page 2-40**.
Paper skew	See the **Note** regarding alignment on **page 4-45** or **“Paper Feed Service Checks” on page 2-38**.

Infoprint 1222

Symptom	Action
Printer not communicating with host	See **“Parallel Port Service Check” on page 2-44**.
Paper wrinkled or bent	See **“Paper “Trees,” Wrinkles, Stacks Poorly Or Curls” on page 2-43**.
Top cover will not close	See **“Cover Interlock Switch Service Check” on page 2-27**.
Operator panel button does not respond	See **“Operator Panel Service Check” on page 2-35** or **“RIP Card Service Check” on page 2-28**.
Operator panel lights do not light or are very dim	See **“RIP Card Service Check” on page 2-28**.

Service Checks

Service checks involve measuring voltages of the LVPS, HVPS, and RIP card assembly. Continuity and resistance verifications are done on cables and components as required.

Note: When looking at the printed side of a PCB, connectors are designated with “J” followed by a number. Pin #1 is designated on the PCB by an adjacent “1” or triangle. Pin numbers index sequentially to the opposite end of the connector. See **“RIP Card Assembly” on page 5-8** for more information.

Cooling Fan Service Check

FRU	Action
Cooling Fan	Make sure the cooling fan motor cable plug is properly seated. Turn the printer off and disconnect the cooling fan cable at the cooling fan. Turn the printer on. Within approximately 15 seconds the RIP card assembly should apply +24V dc to the fan. See **“RIP Card Assembly” on page 5-8** for more information. • If voltage is present, replace the cooling fan. • If voltage is not present, disconnect the cable from the RIP card (J22) and check for continuity and shorts (connector sockets #1 and #2). – If the cable is good, see the **“RIP Card Service Check” on page 2-28** for more information. – If the cable is damaged, replace the cable.

Cover Interlock Switch Service Check

Note: Make sure a toner cartridge is installed and the cover closes all the way, engaging the cover open switch lever.

FRU	Action
Cover Interlock Switch	Disconnect the cover interlock cable from the interlock switch. Push the cover interlock switch to the closed position and verify continuity between the bottom and middle terminals. Open the switch and verify continuity between the bottom and top terminals. The top and middle terminals should indicate discontinuity at all times. • If the switch is good, verity +5 V dc on the middle spade of the cable and ground on the top spade of the cable. • If voltage is not present, see **“RIP Card Service Check” on page 2-28**. Replace the switch if faulty.

RIP Card Service Check

FRU	Action
RIP Card Assembly	Check for +24 V dc from the LVPS card to the RIP card assembly. • Turn the printer off. • Disconnect the LVPS cable from the RIP card at J20. • Turn the printer on. Verify +24 V dc from the cable, pins #1 and #2. • If voltages are not present or incorrect, see the **“Low Voltage Power Supply (LVPS) Service Check” on page 2-30**.

FRU	Action
RIP Card Assembly (continued)	**Note:** With all cables connected, the printer should complete POST within approximately 12–15 seconds in the following sequence: 1. All operator panel lights on solid momentarily. 2. Lights then flash on and off sequentially. After lights quit flashing, the **Ready/Data** light turns on solid. 3. The cooling fan comes on. 4. The fuser lamp comes on. 5. The drive motor runs. 6. The printhead motor runs. 7. The printer cycles down into standby mode/ready. If immediately following power–on the operator panel lights are active but the printer does not go through steps 1 and 2 above, replace the RIP card assembly. **Note**: Always check printhead alignment after replacing the RIP card assembly. See **“Printhead Assembly Adjustment” on page 4-2** for hardware alignment of the printhead. If some lights are on or flashing, see **“Status Information Light Patterns” on page 2-3** to determine a course of action.

Dead Machine Service Check

Note: Check the AC line voltage. The voltage should be within the following limits:

- 100 V ac–127 V ac for the nominal–110 V model printer
- 200 V ac–240 V ac for the nominal–220 V model printer

Low Voltage Power Supply (LVPS) Service Check

FRU	Action
Low Voltage Power Supply Card (LVPS) (110 V and 220 V)	Verify that the power cable is correct. and functioning. Replace if necessary. Disconnect the 8–pin and 5–pin connectors from the LVPS. • On the 8–pin connector (pin #1 is closest to the HVPS), verify pins #2, #5, and #6 are ground. Turn the printer on. **CAUTION:** Be careful to not ground pins to cage while testing. • Verify pin #4 is +5 V dc. • Verify pins #7 and #8 are +24 V dc. • Verify pin #1 of the 5–pin connector (also closest to the HVPS) is +5 V dc. If any one of these are incorrect, replace the LVPS.

Fuser Service Check

When toner is partially fused to the paper, it is usually caused by low fuser temperature.

Warning: Avoid handling the lamp as much as possible as it is easily broken. Be careful not to touch the glass housing with bare hands, as skin contains acids that can weaken the glass.

The line voltage to the printer must be within the following limits:

- 100 V ac–127 V ac for the nominal–110 V model printer
- 200 V ac–240 V ac for the nominal–220 V model printer

Cold Fuser Service Check

FRU	Action
Fuser Lamp Lamp Cable LVPS	Turn the printer off and disconnect the fuser lamp cable from the LVPS card connector (CN3). See **"Power Supply (LVPS)" on page 5-11** for more information. Check for continuity across the fuser lamp. (Pins #1 and #2) If there is continuity, go to step 1. If there is no continuity, go to step 2. Step 1: **Continuity** Reconnect the fuser lamp cable at CN3. Turn the printer on. Measure the voltage at connector CN4 on the LVPS. It should match the line voltage. • If line voltage is not present, replace the LVPS. Make sure the fuser thermistor is correctly connected to the RIP card (J22). If the problem persists, disconnect the thermistor cable from the RIP card assembly and check for +4 V to +5 V dc. See **"Locations" on page 5-1** for more information. • If the voltage is incorrect, see **"RIP Card Service Check" on page 2-28**. Step 2: **No Continuity** Check the lamp cable for continuity. • If correct, replace the lamp. • If incorrect, replace the lamp cable.

Make sure the correct voltage lamp is installed. The voltage rating is stamped on one of the lamp contacts.

FRU	Action
Fuser assembly	If the fuser lamp comes on and a fuser failure error code displays, be sure the thermistor is contacting the hot roll and the thermistor cable is firmly seated in connector J22 on the RIP card assembly. (The thermistor cable goes through the frame by way of a connector.) Check for excessive toner buildup on the surface of the thermistor. Clean as necessary. Turn the printer off and disconnect the thermistor cable from the RIP card (J22). Measure the resistance of the thermistor. The resistance measures approximately 245K ohms when cool (approximately 40°C) and 2K–3K ohms hot. Replace the fuser assembly as necessary.

Hot Fuser Service Check

Make sure the correct voltage lamp is installed. The voltage rating is stamped on one of the lamp contacts.

FRU	Action
Fuser assembly	Measure the resistance of the thermistor. The resistance measures approximately 245K ohms when cool (approximately 40°C) and 2K–3K ohms hot. Replace the fuser assembly as necessary.

Main Motor Service Check

FRU	Action
Main Motor Main Motor Cable	Verify +24 V dc on pin #7 at J10 on the RIP card assembly. • If the voltage is correct, check the main motor cable for continuity. • If the voltages are not correct, see **“Low Voltage Power Supply (LVPS) Service Check” on page 2-30** or replace the RIP card assembly. **Note**: Always check printhead alignment after replacing the RIP card assembly. See **“Printhead Assembly Adjustment” on page 4-2** for hardware alignment of the printhead. If continuity exists on each wire, replace the main motor. If continuity does not exist on one or more of the wires, replace the motor cable.

Operator Panel Service Check

Inspect the operator panel cable for damage. Make sure the cable is plugged in securely.

Run POST and check each light for proper operation.

FRU	Action
Front Cover	If more than one light does not turn on or an individual light stays on solid during POST, check the operator panel cable for continuity. Replace if defective. If the cable has continuity, replace the front cover. If the buttons do not depress or *click* when pressed, replace the front cover.

FRU	Action
Front Cover Operator Panel Cable RIP Card Assembly	If all lights are dim and operate erratically during POST or come on and stay on solid during POST, replace the following FRUs one at a time in the order shown: • RIP card assembly • Front cover • Operator panel cable **Note**: Always check printhead alignment after replacing the RIP card assembly. See **“Printhead Assembly Adjustment” on page 4-2** for hardware alignment of the printhead. If none of the lights come on, make sure the cable is properly connected to the operator panel and the RIP card assembly. Check the LVPS. Disconnect the cable and check it for continuity. Replace if necessary. If the cable indicates continuity, verify +5 V dc at pin #5 on J7. See **“Locations” on page 5-1** for more information. • If the voltages are not correct, replace the RIP card assembly. • If these voltages are correct, replace the front cover.

Transfer Roll Service Check

FRU	Action
Transfer Assembly Roll Transfer Bearing	Check the springs in the left and right transfer roll bearings. The bearing assemblies should support the transfer roll, applying even pressure to the PC drum. The roll should rotate evenly and smoothly. Replace both the transfer roll bearing assemblies if the springs or bearings indicate damage or lack of proper function. Inspect the transfer roll for signs of wear or damage and replace as necessary.

Paper Feed Service Checks

Paper Picks and Advances Approximately 4 Inches

FRU	Action
Plate Assembly (reference edge) Paper Feed Gear Drive Assembly	Turn printer off and remove the print cartridge and left side cover. With a left finger, rotate the main motor counterclockwise while using a right finger to resist gear movement in the plate assembly (reference edge) in the paper path below the cartridge. If the gear motion can be stopped while continuing to rotate the drive motor, one of the units has to be replaced. The paper feed gear is most likely the failing part. Remove the drive assembly for further inspection. Replace the faulty unit. When the plate assembly is replaced, it has to be adjusted. See **“Adjusting Paper Feed Alignment” on page 4-3** for more information.

Paper Jam Error Indication During POST

FRU	Action
Stack Control Flags Photo Sensor	If the exit sensor flag is not resting within the paper exit sensor during POST, the printer indicates **Load/ Remove Paper**. Make sure the flag is operating freely and correctly. Replace the photo sensor and/or the stack control flag as necessary.
Photo Sensors (paper path)	Make sure the input paperfeed sensor is working properly. A stuck or incorrectly installed sensor causes this error. Printer indicates **Paper Jam** and **Press Continue**. If the secondary code indicates additionally: • **Ready/Data,** check under the cartridge for paper, damaged flags, or malfunctioning sensors. • **Toner Low**, check under the cartridge and/or inside the rear door for jammed paper. • **Load/Remove Paper**, check for a damaged flag, malfunctioning sensor at the fuser exit, or a paper jam inside the rear door. • Flashing **Ready/Data**, check for paper jam in the MPF or a malfunctioning MPF sensor. • Flashing **Toner Low**, check the sensor in the duplex path for a jam or a malfunction.

Paper Picks During POST and/or Continuously

FRU	Action
Paper Feed Assembly Paper Feed Solenoid	Check the pick roller clutch for wear. The solenoid interacts with the clutch controlling motion of the pick roller. If the cam surface of the pick roller clutch assembly is worn, the solenoid may not stop the D–roll (pick roll) from rotating. Replace the paper feed assembly if necessary. Make sure the spring on the solenoid is properly installed. If the spring is improperly installed or missing, the pick roller will continuously pick paper. Replace the solenoid.

Paper Picks but Stops Half Way Through the Printer

FRU	Action
Input Paper Feed Sensor RIP Card Assembly	Make sure the input paper feed sensor is working properly. Check for a broken or stuck flag on the input paper feed sensor. Make sure the cable is seated on the RIP card assembly (J23). Verify +5 V dc on pins #1, #4, #7, and ground on pins #3, #6, and #9. See **“Locations” on page 5-1** for more information. • If correct, replace the input paper feed sensor. • If the voltage is not correct, replace the RIP card assembly. **Note:** Always check printhead alignment after replacing the RIP card assembly. See **“Printhead Assembly Adjustment” on page 4-2** for hardware alignment of the printhead.

Paper Never Picks

FRU	Action
Paper Tray	Make sure the paper tray and paper are correctly positioned. Check the input tray for missing or broken parts. Replace the tray as necessary.
Paper Feed Solenoid RIP Card Assembly	Make sure solenoid is installed correctly and its cable is plugged into the RIP card assembly. See **“Locations” on page 5-1** for more information. • Verify approximately 40 ohms in the solenoid. If not correct, replace the solenoid. • Verify the solenoid has the spring in place and functions mechanically. If this is true and the resistance is correct, replace the RIP card assembly. **Note:** Always check printhead alignment after replacing the RIP card assembly. See **“Printhead Assembly Adjustment” on page 4-2** for hardware alignment of the printhead.

Paper Occasionally Picks or Picks Multiple Sheets at Once

FRU	Action
Paper Feed Roll D–Roll at Tray 1 Spring Paper Feed Assembly	Check the paper feed roll (D–roll/ pick roll) for wear. Replace as necessary. Verify that the extension spring is working properly. If not, replace the spring. If the paper feed roll shaft rotates freely, replace the paper feed assembly. **Note**: We recommend that the paper feed roll be replaced when the paper feed assembly is replaced.

Paper “Trees,” Wrinkles, Stacks Poorly Or Curls

FRU	Action
Fuser Assembly	This problem is most likely due to a worn transfer roller. A worn transfer roller causes the printer to run hotter than required for the media being printed. Excessive heat can cause paper treeing problems, poor stacking, or curl.

Parallel Port Service Check

1. Perform a print test to make sure the printer prints correctly. See **“Status Information Light Patterns” on page 2-3** for more information.
2. Be sure the printer cable is designed for bidirectional printing.
3. Be sure the user application is set up correctly.
4. A non–standard parallel cable may require some adjustment in the Par S strobe. See **“Printer Diagnostics Mode” on page 3-6** item 6 for more information.
5. Some computers assume the printer samples data on the trailing edge of the strobe. This printer defaults to sample data on the leading edge. This process can be switched by turning Parallel Mode 2, off. See **“Configuration Menu Group or Diagnostic Menu Group” on page 3-2** for more information.
6. If the internal print test page prints correctly, the user application/printer driver is set up correctly, and the correct bidirectional parallel cable is installed, yet the printer still fails to print on command from the host computer, replace the RIP card assembly.

   Note: Always check printhead alignment after replacing the RIP card assembly. See **“Printhead Assembly Adjustment” on page 4-2** for hardware alignment of the printhead.

Print Quality Service Checks

Blank Page

FRU	Action
Toner Cartridge	Remove the toner cartridge and gently shake the assembly to evenly distribute the toner. Ensure clean electrical contacts on the right side.

FRU	Action
Printhead Printhead Cable HVPS RIP Card Assembly Cartridge Contacts Assembly	Blank pages can be caused by a defective printhead assembly, high voltage power supply, or RIP card assembly. See **“RIP Card Service Check” on page 2-28** and verify the required voltages and proper ground at connectors J1 and J3. With the cartridge removed and the printer off, check continuity between HVPS (DC designation on outside of card) and the PC pin inside the printer. The PC pin is directly above the transfer roll gear. If the voltages are correct, check the printhead cable for continuity. • If the cable measures continuity, replace the printhead. • If the cable does not measure continuity, replace the cable. See **“High Voltage Power Supply (HVPS)” on page 5-12** and verify the voltages. • If the +24 V dc and +5 V dc input voltage measurements are correct, replace the HVPS. • If the voltages are incorrect, replace the RIP card assembly. **Note**: Always check printhead alignment after replacing the RIP card assembly. See **“Printhead Assembly Adjustment” on page 4-2** for hardware alignment of the printhead.

Black Page

Note: Incorrect laser exposure or incorrect charging of the photoconductor by the charge roll causes an all black page.

FRU	Action
HVPS Contacts	Check the contacts for contamination and correct installation. Replace as necessary.
RIP Card Assembly Controller Card HVPS Cable HVPS Left Guide Assembly	Ensure the HVPS to RIP card and charge roll cables are correctly installed. Check continuity of the charge roll cable from C (printed on outside HVPS) to the bushing at the right side of the charge roll. • If continuity fails, replace the left guide assembly. Check continuity from the charge roll left side bushing to the right side shaft. • If continuity fails, remove the charge roll and clean the left side shaft and bushing. See **“High Voltage Power Supply (HVPS)” on page 5-12** and check the voltage measurements. • If the +24 V dc and +5 V dc input voltages are correct, replace the HVPS. • If the voltages are not correct, see **“RIP Card Service Check” on page 2-28**. • Check continuity on the HVPS/ RIP card cable.

Heavy Background

Poor development or poorly charged toner particles cause excessive background. This is more noticeable as the toner cartridge nears end of life.

FRU	Action
Toner Cartridge (not a FRU)	Make sure the toner cartridge is correctly installed and the high voltage contacts are clean. If the cartridge is installed correctly and the problem persists, try a new cartridge.
HVPS Contacts HVPS Card RIP Card Assembly Cartridge Contacts Assembly	Check the contacts for correct installation and contamination where contact is made with the toner cartridge and HVPS card. Clean as necessary. If this does not correct the problem, replace the following FRUs one at a time in the order shown: • HVPS card • RIP card assembly **Note**: Always check printhead alignment after replacing the RIP card assembly. See **“Printhead Assembly Adjustment” on page 4-2** for hardware alignment of the printhead.

Partial Blank Image/White Spots (no periodic pattern)

FRU	Action
Toner Cartridge (not a FRU)	Remove the toner cartridge and gently shake the assembly to evenly distribute the toner. If the toner cartridge is low, try a new one.
Fuser Backup Roll Springs (not a FRU) Fuser Assembly	Check springs at each end of the backup roller springs and backup roller to ensure adequate and even pressure is applied to the fuser hot roll. Replace the fuser if necessary.
Paper	Make sure recommended paper is being used.

Variation in Image Density Horizontally Across Page

FRU	Action
Toner Cartridge	The charge roll in the toner cartridge may have an unbalanced pressure against the PC drum. Try a new toner cartridge.
Transfer (Roll)/Bearings Transfer Assembly Roll	Check the springs and bearings at both ends of the transfer roller. The bearing assemblies should support the transfer roller, applying even pressure to the PC drum. Replace both bearing assemblies if either spring shows signs of damage or fatigue. Inspect the transfer roller for signs of wear or damage and replace as necessary.

Poor Fusing of Image

FRU	Action
Fuser Lamp	The fuser may not be operating at the proper temperature to fuse the toner to the paper. See **“Cold Fuser Service Check” on page 2-32**. Make sure recommended paper is being used.

Light Print

FRU	Action
Toner Cartridge	Make sure the toner cartridge is installed correctly and is not low on toner. If the problem continues, install a new toner cartridge.
Transfer Roller HVPS Contact (Transfer Roller) HVPS Card	Check the transfer roller for signs of toner buildup and contamination. Inspect the HVPS contact (transfer roller) for contamination. Inspect the HVPS card for contamination where it meets the HVPS contacts. If all components appear free of contamination, replace the following FRUs one at a time in the order shown: • Transfer roller • HVPS contact (transfer roller) • HVPS card

White or Black Lines or Bands

FRU	Action
Toner Cartridge Paper Feed Drive Gears	Banding appears as light or dark horizontal lines on a uniformly gray page or on a page with a large area of graphics. Banding is primarily due to a variation in the speed of the paper as it feeds through the printer especially in the developer and transfer process. Inspect the toner cartridge and paper feed components, especially the drive gears, for signs of wear, debris, binds, or damage.

Toner on Back of Page

FRU	Action
Print Cartridge	Inspect the overall paper path for signs of spilled toner. Gently clean the contaminated areas with a soft cloth or compressed air.
Fuser Assembly	The fuser hot roll can cause toner on the back of the paper, if toner is building up on the hot roll. This buildup may transfer to the backup roller, later transferring to the back of the paper. Inspect the hot roll and backup roller for signs of contamination and replace fuser assembly as necessary.
Transfer Roller	A transfer roller contaminated with toner can cause toner to transfer to the back of printed pages. Inspect the transfer roller for contamination and replace as necessary.

Solving Print Quality Problems

Note: To run the print quality test pages:

- Turn the printer off and open the door.
- Turn the printer on while pressing **Continue**.
- Continue to press and hold **Continue** until lights finish cycling.
- When the **Error** light stays on, close the door and wait until the four top lights are on.
- Press **Cancel** until the top two lights are on.
- Press **Continue** for three seconds. The print quality test pages print. See **"Using Print Quality Test Pages" on page 2-59** for more information.

Problem	Action
Light or blurred characters. 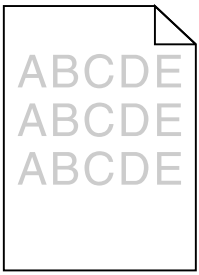 	The print cartridge may be getting low on toner: • Remove the print cartridge. • Shake it from side to side to redistribute the toner. • Reinstall it. • Make sure you are using recommended print media (see media types and sizes in the *User's Guide*.) • Use MarkVision™ to define the custom type setting for media type, media texture, or media weight. • The print cartridge may be defective. Replace it.

Problem	Action
Toner smudges appear on the front or back of the page. 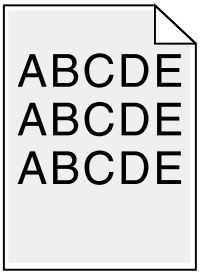 	• Make sure the paper is straight and unwrinkled. • Check for loose toner in the printer. • Clean the printer. • If the problem persists, replace the cartridge.
Vertical or horizontal streaks appear on the page. 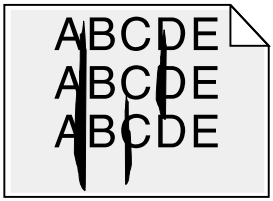 	• Replace the print cartridge.
Toner smears or rubs off the page. 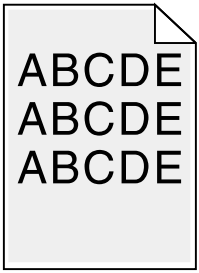 	• Try a different kind of paper. Paper designed for copiers gives the best quality. • If you are printing on special media, such as, card stock or labels, be sure you select the correct paper type in the printer driver. • Change the media texture setting. You can download the latest driver from the Lexmark Web site, www.lexmark.com.

Problem	Action
The print is getting light but the **Toner Low** light is not on. Ready/Data Toner Low Load/ Remove Paper Paper Jam Error Press Continue	• The **Toner Low** light does not come on if the standard 1,500 page print cartridge is installed. • Remove the print cartridge and gently shake it from side to side to redistribute the toner. • Replace the print cartridge.
The **Toner Low** light is on. Ready/Data Toner Low Load/ Remove Paper Paper Jam Error Press Continue	• Remove the print cartridge and gently shake it from side to side to redistribute the toner. • Replace the print cartridge.
Solid black areas on transparencies or paper contains white streaks.	• Choose a different fill pattern in your software application. • Try a different type of paper. Paper designed for copiers gives the best quality. • Remove the print cartridge and gently shake it from side to side to redistribute the toner. • Replace the print cartridge.
Faint images or repetitive spots appear on the page.	• Select a different media type or form type setting from your printer driver. • Try a different type of paper. Paper designed for copiers gives the best quality. • Replace the print cartridge.

Problem	**Action**
Pages are blank. 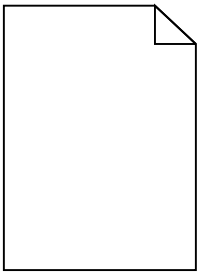	• The print cartridge may be out of toner or defective. Replace the cartridge. • You may have a software error. Try turning the printer off and back on. • Check the photoconductor circuit for continuity. • Check the printhead.
The printer has missing or damaged parts.	Contact the place where you bought your printer.
The operator panel lights do not come on when the printer is turned on.	• The lights may take a few seconds to come on. • Make sure the power cord is firmly plugged in at the back of the printer and at the electrical outlet.
The top cover does not close.	Make sure the print cartridge is positioned correctly.
The printer is on, but nothing prints.	• Make sure the print cartridge is installed properly. • Make sure the parallel or USB cable is firmly plugged into the connector on the back of the printer. • Press **Continue** with a brief button press to print a test page to determine whether the problem is with the printer or the computer. – If you can print a test page, the problem is in the computer or the software application. – If you cannot print a test page, the problem is in the printer.

Problem	Action
The media skews or buckles.	• Don’t overfill tray 1 or the optional tray 2 (see media capacities in the media types and sizes table in the *User’s Guide*). • Make sure the paper guides are flush against the edges of the media.
The paper sticks together/printer feeds multiple sheets of paper.	• Remove the paper from tray 1 or the optional tray 2 and fan the paper. • Don’t overfill tray 1 or the optional tray 2 (see media capacities in the media types and sizes chart in the *User’s Guide*).
The paper fails to feed from tray 1.	• Remove the paper from tray 1 and fan the paper. • Make sure tray 1 is selected from the printer driver. • Do not overfill the tray.

Problem	Action
The paper fails to feed from the optional tray 2.	• Make sure the optional tray 2 is selected from the printer driver. • Remove the paper from the optional tray 2 and fan the paper. • Make sure the tray is pushed all the way in. • Make sure the metal plate is pressed down before inserting it into the printer. 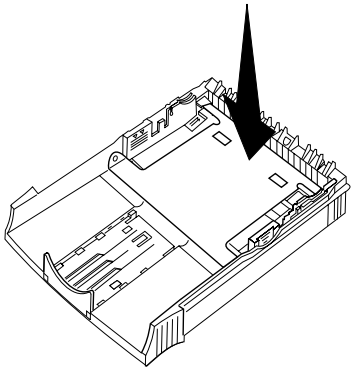 **Note**: Once the tray is inserted, the metal plate springs up so the paper can feed into the printer. • Make sure the paper does not exceed the stack height indicator. • Make sure the paper is under both corner bucklers (see loading paper in the *User's Guide*).

Problem	Action
The **Load Paper** light is on even though there is paper loaded in the optional tray 2. ◎ Ready/Data ◎ Toner Low ✹ Load/ Remove Paper ◎ Paper Jam ◎ Error ✹ Press Continue	• Make sure the tray is pushed all the way in. • Press **Continue**.
The printer does not print after a paper jam has been cleared.	• Press **Continue** or open and close the printer cover to restart the printer. • Make sure the print cartridge is installed properly.
Unexpected characters print or characters are missing.	• Make sure you are using the correct printer driver. • Select hex trace mode to determine what the problem is. See **“Configuration Menu Group or Diagnostic Menu Group” on page 3-2** for more information. • Restore factory defaults. See **“Restoring Factory Defaults” on page 2-59** for more information. • Make sure the parallel cable or USB cable is firmly plugged in at the back of the printer.
Jobs are not printing and the **Error** light is on solid.	• Make sure the print cartridge is installed properly. • Make sure the printer top cover is closed. • Make sure the top cover is activating the switch.

Restoring Factory Defaults

Sometimes resetting the printer to the original factory default settings solves formatting problems.

1. Enter the configuration mode. See **“Configuration Menu Group or Diagnostic Menu Group” on page 3-2** for more information.
2. Press and release **Cancel**.

   The **Ready/Data** light is on.
3. Press **Continue** until lights flash.

   The factory defaults are reset.
4. To return the printer online, POR the printer.

Using Print Quality Test Pages

To help isolate print quality problems, like streaking, print test pages using the print quality test pages setting:

1. Enter the special function menu. See **“Configuration Menu Group or Diagnostic Menu Group” on page 3-2** for more information.
2. Press **Cancel** and wait for the **Ready/Data** light.
3. Press **Cancel** again and wait for the **Toner Low** light.
4. Press **Cancel** again and wait for both **Ready/Data** and **Toner Low** lights.
5. Press and hold **Continue** until lights cycle.

   Three pages print to help you evaluate print quality. The first page has registration marks, the second page is gray, and the third page is black. Once the paper exits into the output bin, the printer returns to the **Ready** state.
6. Use the test pages to isolate problems such as print too light, toner streaks, and so on. See the Troubleshooting tables in the *User’s Guide* for solutions to these problems.
7. To return the printer online, POR the printer.

3. Diagnostic Aids

Operator Panel

Menu Definition

The operator panel settings and operations are divided in two menu groups.

Configuration Menu Group	The Configuration Menu group contains a set of menus, settings, and operations which are infrequently required by a user. Generally, the options made available in this menu group are used to configure a printer for operation. Access to the Configuration Menu group is gained by way of a POR key sequence. See **“Power–On Operations” on page 2-22** for more information.
Diagnostic Menu Group	The Diagnostic Menu group contains the settings and operations used while manufacturing and servicing the printer. See **“Power–On Operations” on page 2-22** for more information.

The top four lights are on (home state) when the printer is in either Configuration or Diagnostic mode. The only items that can be changed have one or both **Error** and **Continue** lights on.

- Press and release **Cancel** to advance through the menus.
- Press and release **Continue** to advance through the values for a menu item until you find the one you want.
- Press and hold **Continue** until all lights cycle to save the value for a menu item.
- Press and hold **Cancel** until all lights cycle to go to the home state.

Configuration Menu Group or Diagnostic Menu Group

Correct entry of either mode is indicated with the four top lights on. Press and hold **Continue** (about 4 seconds) for the printer to produce a page similar to the ones on **page 3-4** and **page 3-5**, depending on which mode is entered.

Note: For information on how to enter the configuration or diagnostic modes, see **“Power–On Operations” on page 2-22**.

Moving Around the Menu

Referring to **page 3-4** and **page 3-5**, menu items are designated by the non–indented items listed along the left edge of the page. (Bottom as printed from printer.)

Note: These items are un–shaded and have the four light pattern indications printed.

- Press and release **Cancel** to move sequentially from one of the menu items to another.
- Press and hold **Cancel** to jump to home state (top four lights on).
- Press and release **Continue** to move through the values of the item with values.

  This action rotates only through the possible values of the selected menu item.

Note:

- Menu items with values have either (or both) the **Error** or **Press Continue** lights on.
- Menu items without values have neither **Error** nor **Press Continue** lights on.

Changing Settings or Printing Graphical Aids

Select the desired item by pressing and releasing **Cancel**. If the item has values, press and release **Continue** to select the desired value.

- Press and hold **Continue** to:
  - Activate printing.

    Three pages are in the Print Quality Pages. Instructions for either the Configuration or Diagnostics mode occupy one page. Continuous (Cont Prt …) printing can be halted by pressing **Cancel**.
  - Reset defaults.

    After resetting factory defaults, the operator panel returns to home state (four top lights on). Settings are retained in NVRAM (as well as ROM).
  - Record selected settings.

    After setting new values, the operator panel returns to home state. Settings are retained in NVRAM.

Exceptions are Hex Trace and Demo Mode Activate:

- Select Hex Trace On or Demo Mode Activate

  The printer automatically POR's and returns with **Ready/Data** flashing slowly. Files sent to the printer are printed in Hex Trace.
- Press and hold **Cancel** to leave Hex Trace.

  The printer returns to ready state (**Ready/Data** light on).
- Select Demo Mode Activate

  The **Ready/Data** light comes on solid and the **Press Continue** light flashes. A demo page prints each time **Continue** is pressed.

After returning to Demo Mode Deactivate (see note), the printer returns to **Ready/Data** automatically after a few seconds.

Note: After using Hex Trace, return to the printer Configuration group by powering the printer off and on. See **"Configuration Menu Group or Diagnostic Menu Group" on page 3-2** for more information. The printer cannot be returned to the menu home state using the operator panel.

Printer Settings Configuration

Printer Settings Configuration

This page explains how to access the printer menus and change values. Menus are represented by Ready/Data, Toner Low, Load/Remove Paper, Paper Jam light sequences. Menu items and their values are indicated by Error and Press Continue light sequences.

Use the illustration to help you find the menu and value you want to:

1. Press and release Cancel to advance through the menus and to the items you need.
2. Press and release Continue to advance to the value you need.
3. Press and hold Continue until all of the lights cycle to perform the function or to save the value.
4. To return to the Home menu, press and hold Cancel until all of the lights cycle.
5. Turn the printer off to exit the menus.

	Ready/Data	Toner Low	Load/Remove Paper	Paper Jam	Error	Press Continue
Legend						
Light On	●	●	●	●	●	●
Light Off	○	○	○	○	○	○
Light Blinking	◐	◐	◐	◐	◐	◐
Value						
Utilities						
Print Configuration Mode Instructions - This Page	○	○	●	●	●	●
Reset Factory Defaults	○	○	○	○	○	●
Hex Trace = O	○	●	○	○	●	○
Off	○	●				
On	●	○				
Print Quality Test Pages	○	○	○	○	●	●
Setup						
IPDS Emulation = Deactivate	○	●	○	●	○	○
Deactivate	○	●				
Activate	●	○				
Demo Mode = Deactivate	○	●	○	●	○	●
Deactivate	○	●				
Activate	●	○				
Auto Off after LF = Off	○	●	○	●	●	○
Off	○	●				
On	●	○				
Auto LF after CR = Off	○	●	○	●	●	●
Off	○	●				
On	●	○				
Parallel						
NPA Mode = Auto	●	●	●	○	○	○
On	●	○				
Off	○	●				
Auto	●	●				
Protocol = FastBytes	●	○	●	○	○	●
Standard	○	●				
FastBytes	●	○				
Parallel Mode 2 = On	●	○	●	○	●	○
Off	○	●				
On	●	○				
Mac Binary PS = Auto	●	●	●	○	●	●
On	○	●				
Off	●	○				
Auto	●	●				
USB						
NPA Mode = Auto	●	●	●	●	○	○
On	●	○				
Off	○	●				
Auto	●	●				
MAC Binary PS = Auto	●	●	●	●	○	●
On	○	●				
Off	●	○				
Auto	●	●				
Network						
NPA Mode = Auto	●	●	●	●	●	○
Off	○	●				
Auto	●	●				
MAC Binary PS = Auto	●	●	○	○	○	◐
On	○	●				
Off	●	○				
Auto	●	●				
Set Card Speed = Auto	○	●	○	○	◐	○
Auto	○	●				
10 Mbps, Half Duplex	●	○				
10 Mbps, Full Duplex	●	●				
100 Mbps, Half Duplex	○	◐				
100 Mbps, Full Duplex	◐	○				

Printer Diagnostics

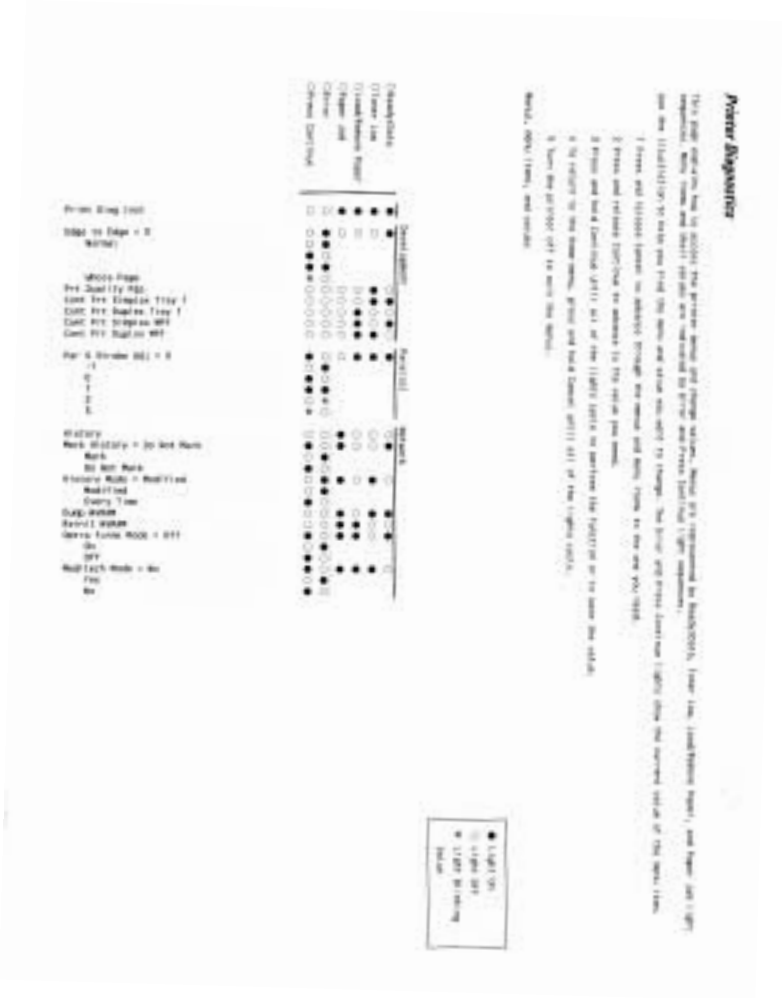

Printer Diagnostics Mode

The Printer Diagnostics mode is for service use only. Its manipulation is the same as the Configuration mode. The following functions can be performed in the Diagnostics mode. See **“Configuration Menu Group or Diagnostic Menu Group” on page 3-2** for more information.

1. Print diagnostic instructions and menu settings by pressing and holding **Continue** until the lights cycle.

   We recommend this sheet be run and checked anytime Diagnostics mode is entered. It provides instructions in the manipulation of the menu.
2. Set edge–to–edge printing on/off.
   - Off is the default and normal setting which allows the printer graphics and printing engine to set the margins accordingly.
   - When edge–to–edge is set on, the printer graphic and printing engine shift all four margins to the physical edges of the paper.
3. Print the Print Quality Pages.
   - These are the same pages that are run in the Configuration mode.

   Note: The toner cartridge lockout function is disabled in this mode.

   - In the Configuration mode, the lockout function is enabled which means the pages cannot be printed unless the toner cartridge has a machine class ID that matches the machine class ID held in NVRAM on the RIP card.

   Note: The next two items run continuously until interrupted by pressing **Cancel** or powering off. The printed page comes from printer ROM and is useful for printhead alignment and skew measurements.

4. Print simplex from tray 1, MPF, or tray 2 (if installed).
5. Print duplex from tray 1, MPF, or tray 2 (if installed).

6. Par S strobe adjustment for the parallel port can be set to four additional settings in addition to the default setting. Pull–up resistors are only enabled indicating parallel mode 1 is not supported. (Parallel mode 2 is supported and can be turned off or on in the configuration mode.) Adjustments may have to be made if an unusually long parallel cable is being used.
7. Network settings for Mark History, History mode, Optra Forms™ mode, and Meditech mode can be set.
   - A service error history report (network) can be printed.
   - Dump NVRAM prints a hex dump of the NVRAM partition and the re–init NVRAM resets the network NVRAM to the factory defaults.

Continuity Check on HVPS/Cartridge

Continuity between the HVPS and the charge roll, Dr. B (blade), TAR (toner adder roll), the developer roll, and the photoconductor (DC) can be checked as follows:

1. Turn printer off.
2. Remove the right side cover. See **“Right Side Cover Removal” on page 4-10** for more information.
3. Remove the toner cartridge.
4. Check from C on the HVPS to the bearing on the left side of the charge roll. See **page 5-12** for more information.
5. Check from the Dr. B, TAR, DEV, T, and DC (photoconductor) respectively to the corresponding pin on the right side frame where the toner cartridge makes its contacts.

If any show discontinuity, remove the HVPS and check the cartridge contact assemblies (springs) for continuity and damage. If the charge roll and the cable at C show discontinuity, replace the left guide assembly. See **“High Voltage Power Supply (HVPS)” on page 5-12** for testing the PCB.

4. Repair Information

Warning: Read the following before handling electronic parts.

Handling ESD-Sensitive Parts

Many electronic products use parts that are known to be sensitive to electrostatic discharge (ESD). To prevent damage to ESD-sensitive parts, follow the instructions below in addition to all the usual precautions, such as turning off power before removing logic cards:

- Keep the ESD-sensitive part in its original shipping container (a special “ESD bag”) until you are ready to install the part into the printer.
- Make the least-possible movements with your body to prevent an increase of static electricity from clothing fibers, carpets, and furniture.
- Put the ESD wrist strap on your wrist. Connect the wrist band to the system ground point. This discharges any static electricity in your body to the printer.
- Hold the ESD-sensitive part by its edge connector shroud (cover); do not touch its pins. If you are removing a pluggable module, use the correct tool.
- Do not place the ESD-sensitive part on the printer cover or on a metal table; if you need to put down the ESD-sensitive part for any reason, first put it into its special bag.
- Machine covers and metal tables are electrical grounds. They increase the risk of damage because they make a discharge path from your body through the ESD-sensitive part. (Large metal objects can be discharge paths without being grounded.)
- Prevent ESD-sensitive parts from being accidentally touched by other personnel. Install machine covers when you are not working on the machine, and do not put unprotected ESD-sensitive parts on a table.
- If possible, keep all ESD-sensitive parts in a grounded metal cabinet (case).
- Be extra careful in working with ESD-sensitive parts when cold-weather heating is used because low humidity increases static electricity.

Adjustments

Printhead Assembly Adjustment

The printhead needs to be adjusted after it has been removed. When reinstalling the (new) printhead, tighten the four screws enough to contact the printhead frame. An adjustment is required before tightening the screws.

Note:

- Adjust the printhead so that its body is parallel to the cross brace of the printer frame. Further adjustment may not be needed.
- Always check the printhead alignment after replacing the RIP card assembly. Settings on the original RIP card may not be the same as on the new card. Only a horizontal line adjustment can be made; margins cannot be adjusted. Contact the next support level or call Lexmark 1–800–539–6275 for assistance.

To perform the registration check and adjustment:

1. Turn the printer off.
2. Open the front door.
3. Press and hold **Cancel** while turning the printer on.
4. Hold **Cancel** until the lights have cycled on and off (approximately nine seconds).
5. Close the door when the **Error** light comes on.

   Wait for the four top lights to stay on.
6. Press and release **Cancel** once and wait for the lights to change to **Ready/Data**.
7. Press and release **Cancel** again and wait for **Toner Low** light.
8. Press and release **Cancel** again and wait for both **Ready/Data** and **Toner Low** lights.
9. Press and hold **Continue** until lights cycle.
10. Once the printer starts, press **Cancel**.

    These sheets continuously print if not canceled.

    Use the sheets to check the margins and alignment.

11. Adjust the printhead as necessary.

    If a horizontal line is clockwise on the paper, adjust the printhead counterclockwise.
12. After obtaining a properly adjusted image on the paper, tighten all four screws.

Note: Printhead misalignment results in skewed horizontal lines but a consistent margin top to bottom of page. Paper feed misalignment results in entire image rotated on the paper. See adjusting paper feed alignment for more information.

Adjusting Paper Feed Alignment

When a reference plate (reference edge) assembly is removed, it requires alignment. Use a long shank (6–inches) Phillips screwdriver to adjust the rear screw holding the assembly in place. It is accessed through the hole in the main drive assembly. It is between the RIP card cage and the main motor PCB. Adjust the screw counterclockwise which rotates paper counterclockwise in the printer path (image clockwise) and vice versa.

Removal Procedures

Be sure to unplug the power cord whenever you are working on the printer with one of the covers removed. Be sure to remove the print cartridge before you perform removal procedures.

Cover Removals

Lower Front Cover (Multipurpose Feeder Cover) Removal

1. Open the front cover.
2. Open the MPF front cover to where the latches are clear (about 15°).
3. Lift the left side of the cover to release it from the hinge.

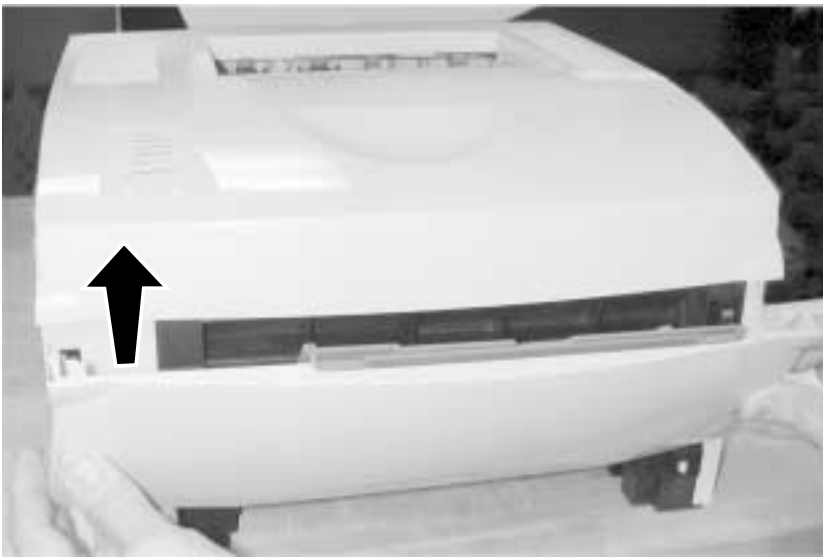

4. Remove the lower front cover.

Front Cover Removal

1. Open the front cover.
2. Disconnect the cable from the display panel **[A]**.
3. Remove the four screws **[B]**.
4. Remove the front cover.

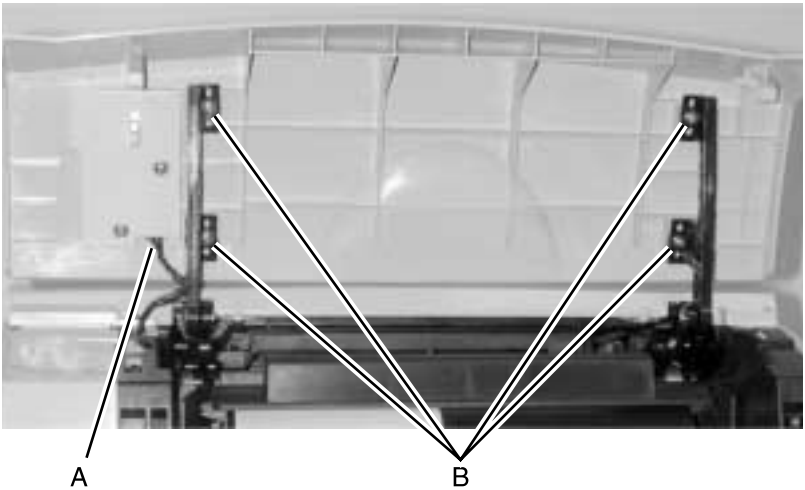

Top Cover Assembly Removal

1. Remove the toner cartridge.
2. Remove the two (2) screws in front **[A]**.

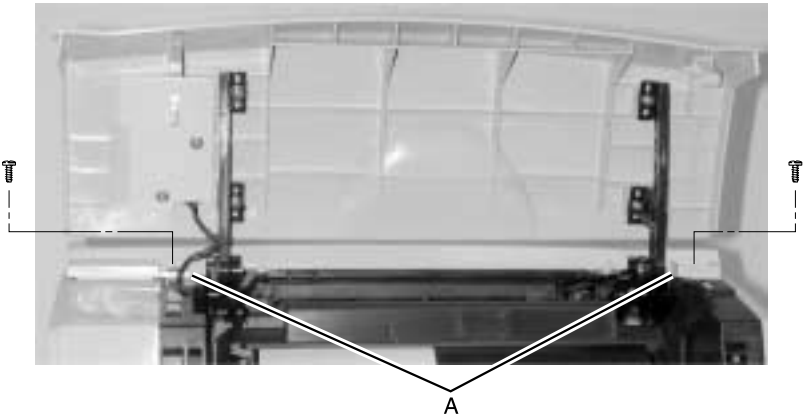

3. Open the rear exit door.
4. Remove the two screws in the rear **[A]**.

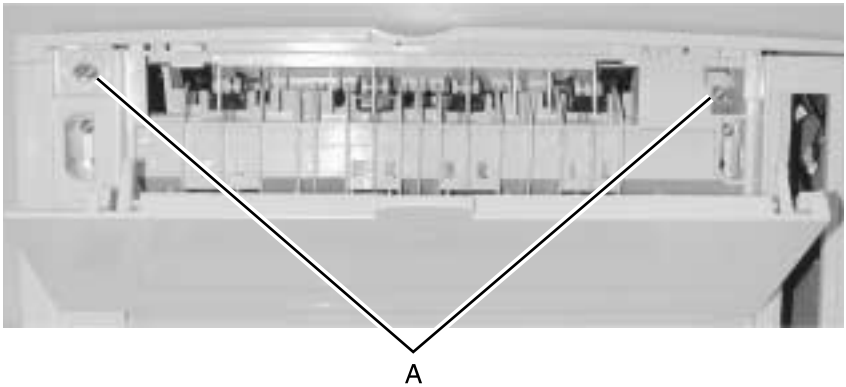

5. Remove the duct assembly in the top cover.

6. Carefully, lift the rear edge of the top cover to clear the exit flags and rotate the front cover hinge until the cover is in a vertical position.

To completely remove the top cover:

7. Open the front cover.
8. Remove the E–clips from both hinges that connect the charge roller and top cover **[B]**.
9. Remove the stud hinges.
10. Disconnect the cable **[A]**.
11. Remove the top.
    The front cover remains attached to the top cover.

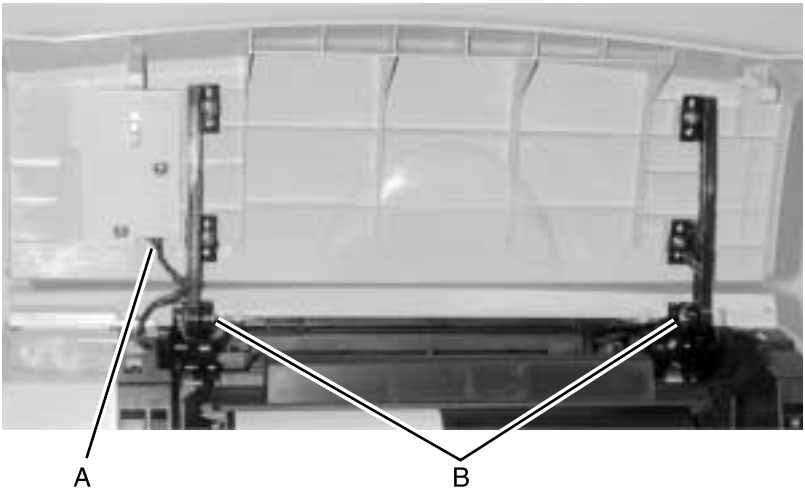

Right Side Cover Removal

1. Remove the paper tray.
2. Remove the front right screw and same side rear screw from the top cover. See **“Top Cover Assembly Removal” on page 4-6** for more information.

Note: If you do not have an appropriate screwdriver to access the front right screw, remove the two screws holding the right side of the front cover to the hinge. Move the front cover just enough to access the screw.

3. Open the MPF.
4. Lift the top cover just enough to grasp the top of the right side cover with your right hand **[B]**.
5. While pulling out on the top of the right side cover, use your left hand to release the two latches (top front and lower front) **[A]**.

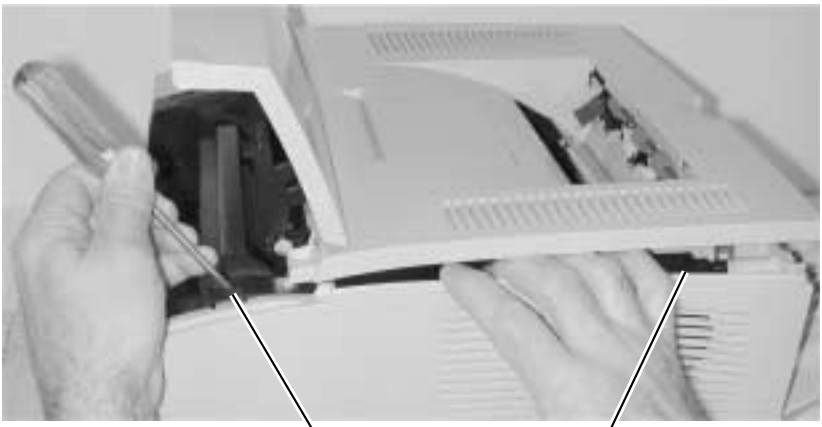

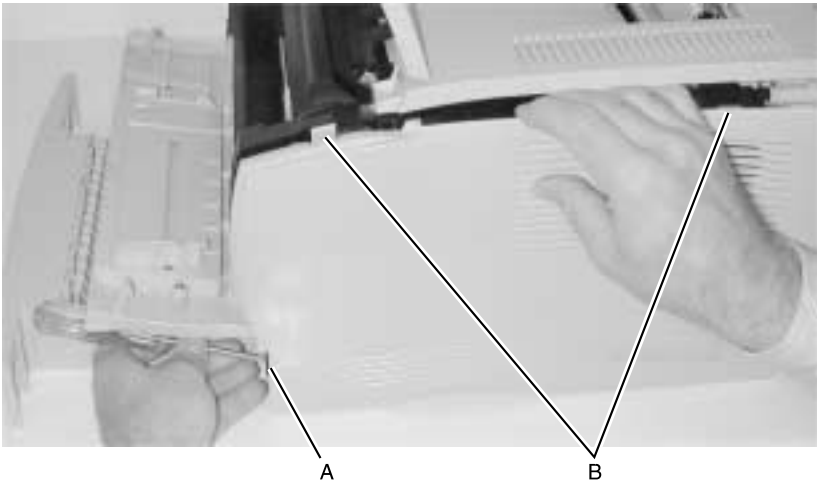

Note: The MPF door may need to be lifted slightly for the side cover to clear.

6. Release the top rear latch, if necessary.
   Swing the cover out and lift it from the base.

Right Side Cover Removal

There may be an occasion where you have to completely remove the top cover instead of just lifting it to access the screw and latches.

1. Remove the paper tray.
2. Remove the top cover assembly. See **"Top Cover Assembly Removal" on page 4-6** for more information.
3. Release the three latches (lower front, top front, top rear) as shown in the picture above.
4. Lift cover out of the bottom slots.

Left Side Cover Removal

1. Open the front cover and the MPF cover.
2. Disengage the two latches (located in the front and top) **[A]**.
3. Swing the left side cover away from the printer.

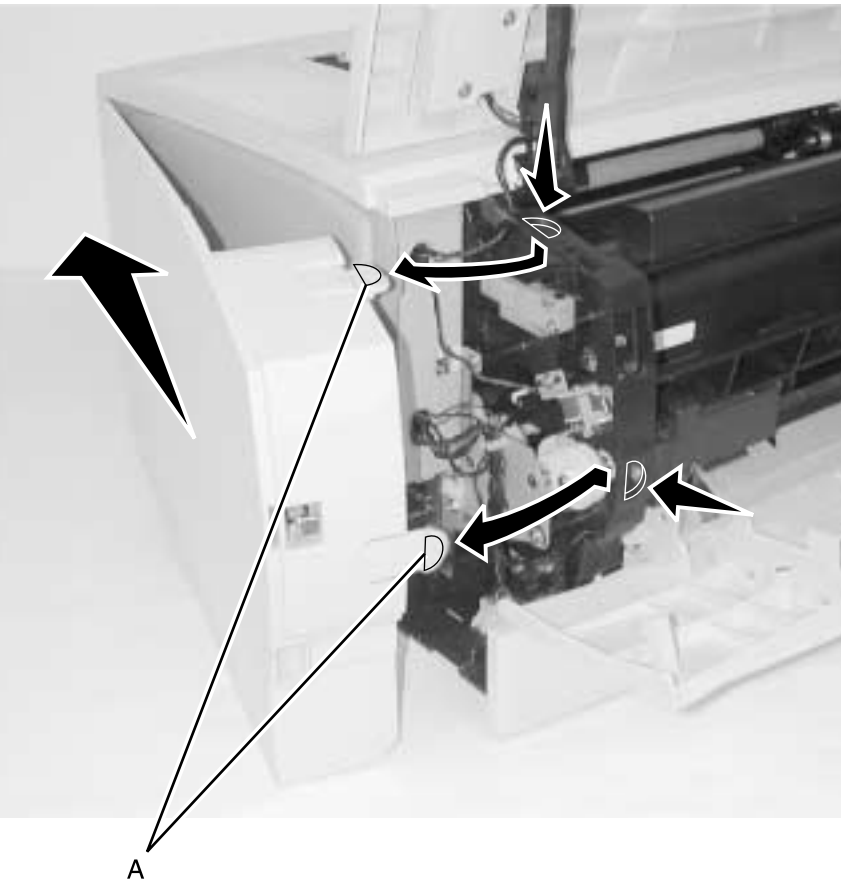

Note: With only the left side cover and inner cover removed, the following items can also now be removed and replaced:

- MPF gear–see **“Multipurpose Feeder (MPF)” on page 7-4** for more information.
- Toner level sensor–see **“Electronics and Cables” on page 7-8** for more information.
- Motor with PWB–see **“Paper Feed” on page 7-14** for more information.
- Door latches–see **“Frame” on page 7-16** for more information.
- Paper feed solenoid–see **“Electronics and Cables” on page 7-8** for more information.
- RIP card cage cover–see **“Electronics and Cables” on page 7-8** for more information.
  - Memory–see **“Options” on page 7-22** for more information.
  - Connector cable for second drawer option–see **“Electronics and Cables” on page 7-10** for more information.
  - RIP card PCB–see **“Electronics and Cables” on page 7-8** for more information.

Rear Cover Removal

1. Remove the paper tray.
2. Remove the right side cover. See **“Right Side Cover Removal” on page 4-10** for more information.
3. Remove the left side cover. See **“Left Side Cover Removal” on page 4-12** for more information.
4. Open the paper tray trim.
5. Disconnect the sensor cable (inline connector) below the lower left corner of the controller cage.

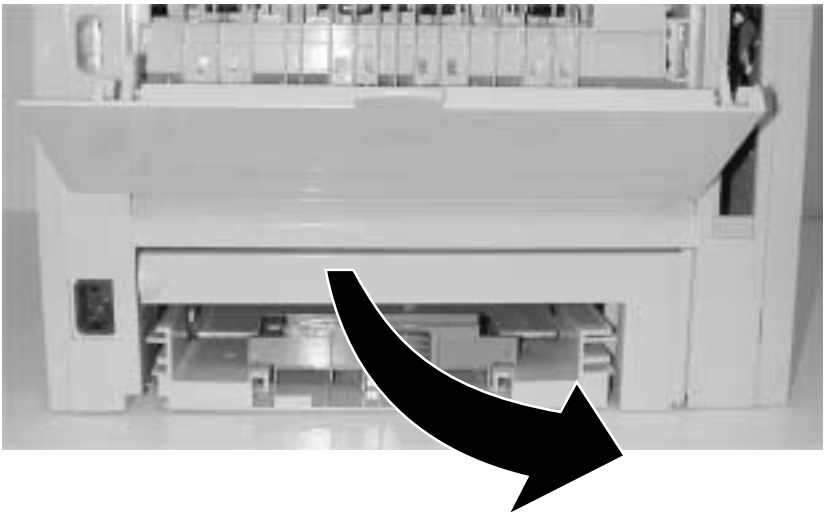

6. Open the exit tray (rear door).

7. Remove the six screws **[A]**.
8. Lift the top cover slightly with one hand while pulling out on the rear cover.

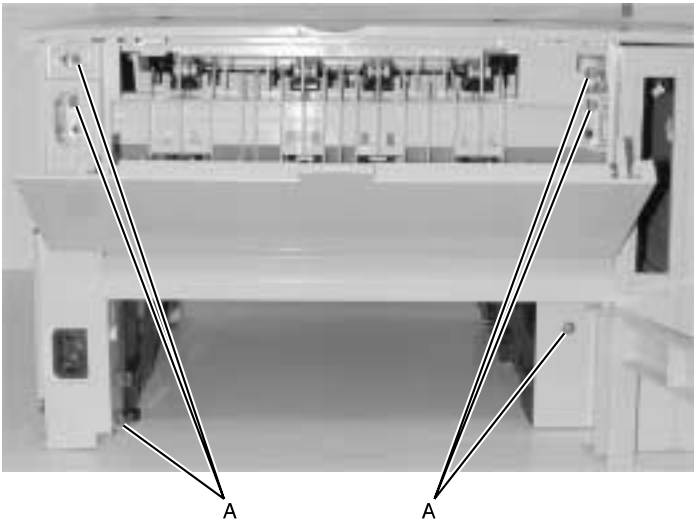

Note: When reinstalling the rear cover, be sure to position the fuser exit guide fingers such that they are not bound by the rear cover. If a bind occurs, a jam will occur.

Rear Exit Door Removal

1. Open the rear exit door.
2. Use your index finger or screwdriver to disengage the left (facing back of printer) hinge from the rear cover **[A]**. With your opposite hand, apply force to remove the door away from the printer.

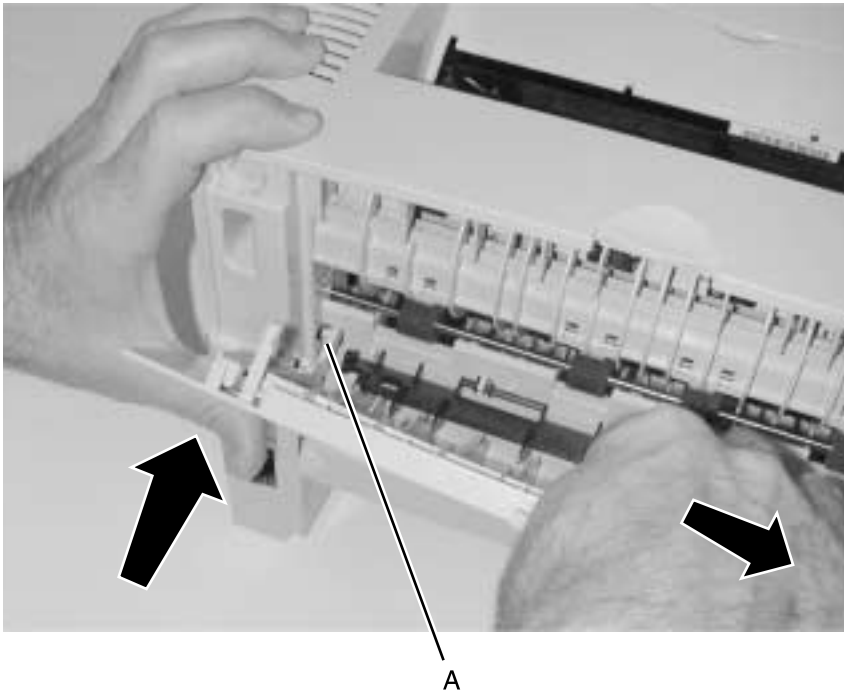

Duplex Tray Assembly Removal

1. Remove the paper tray.
2. Disconnect all cables on the back of the printer.
3. Tilt the printer on its back.
4. Remove the five screws **[A]**.
5. Work the right side loose first, disconnect the paper input sensor cable.
6. Remove the duplex assembly.

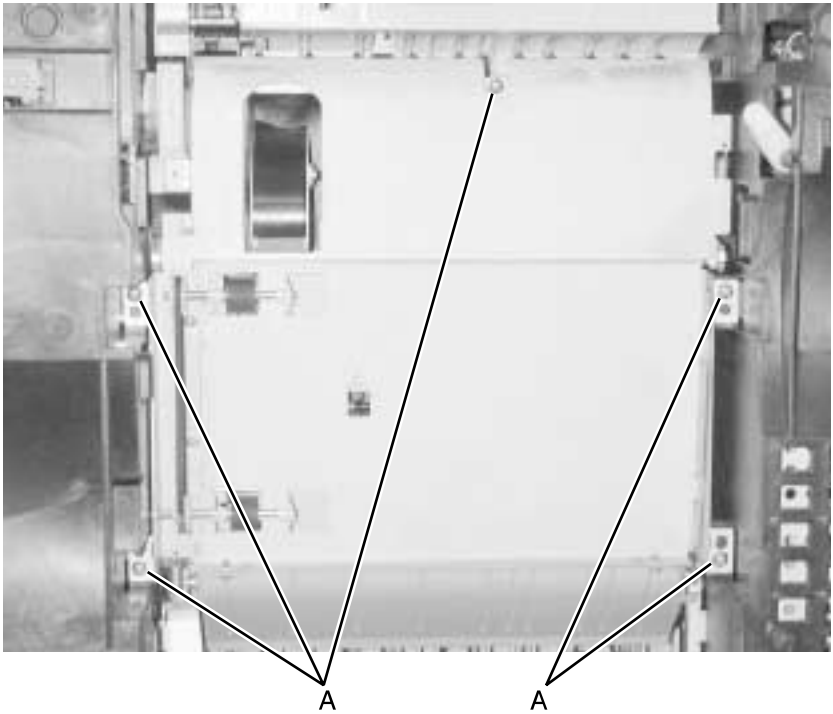

Fuser Assembly, Fuser Paper Exit Guide, Fuser Exit Sensor, and Fuser Lamp Removal

1. Remove the top cover. See **“Top Cover Assembly Removal” on page 4-6** for more information.
2. Remove the rear cover. See **“Rear Cover Removal” on page 4-14** for more information.
3. To remove the fuser assembly, release the two latches and remove the cooling fan duct **[A]**.
4. To replace only the paper exit guide or exit sensor, remove one screw **[B]** to lift off the exit guide.
5. Disconnect the spring on the left side.
6. Swing out for clearance to replace.

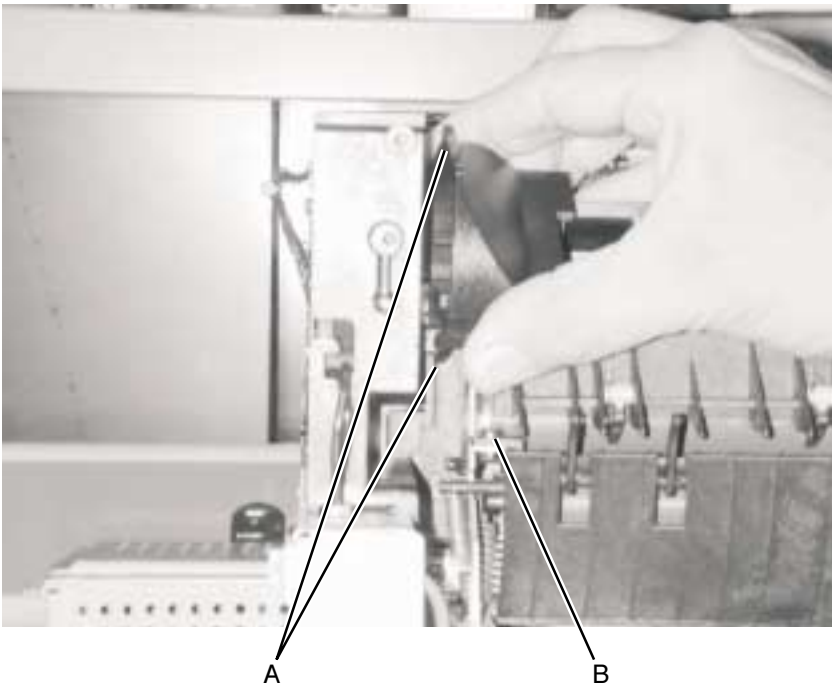

7. Unplug the fuser lamp, exit sensor, and thermistor cables **[B]**.

Note: It may be easier to unplug the fuser lamp once the fuser is loosened.

8. Remove the four screws **[A]**.

Note: Removing the lower left screw requires a long screwdriver (approximately a 6–inch shank).

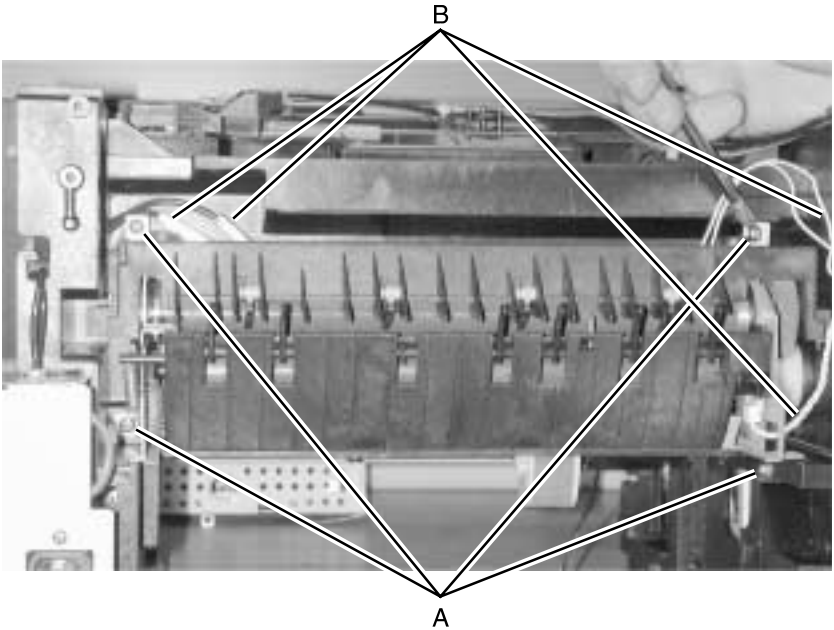

9. Remove the fuser.
10. To replace the fuser lamp, remove the two screws at each end and very carefully extract the lamp from the heater roll.

Warning: Do not touch the glass of a good lamp; it causes premature failure.

Terminal Assembly Removal

1. Remove the HVPS. See **“HVPS Card Removal” on page 4-54** for more information.
2. Remove the terminal assemblies **[A]**.

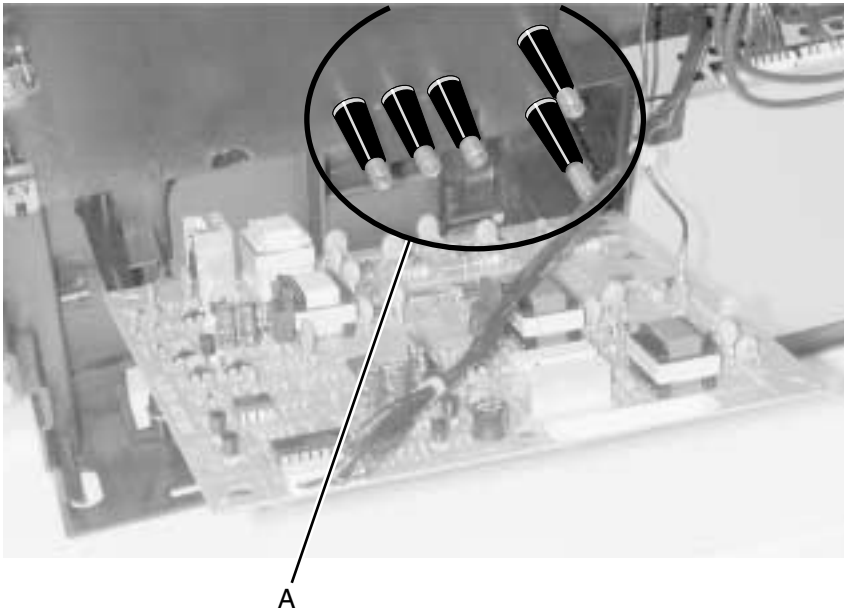

Note: The lower right terminal (to the transfer roll) is gold in color.

Tray Damper and Spring Removal

1. Remove the right side cover. See **“Right Side Cover Removal” on page 4-10** for more information.
2. Remove the tray damper spring from the printer frame post **[A]**.
3. Rotate the lever counterclockwise as far as possible and lift out.

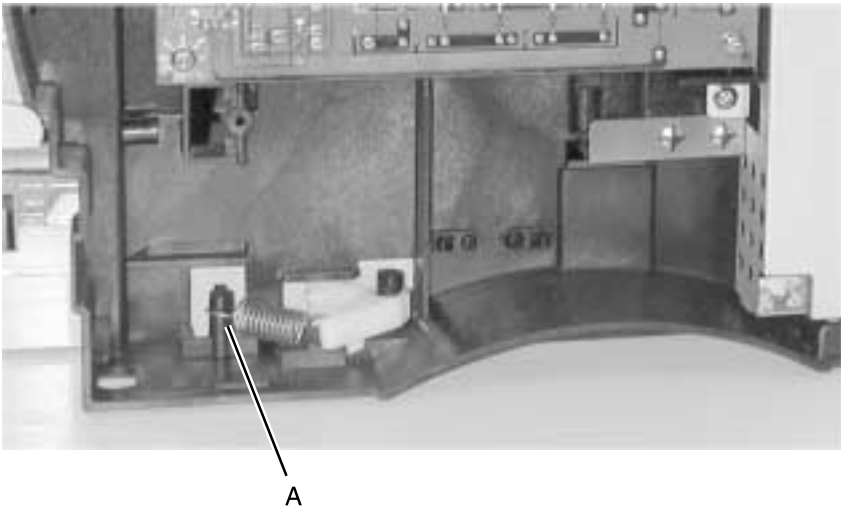

Door Latches (Right Side) Removal

1. Remove the right side cover. See **“Right Side Cover Removal” on page 4-10** for more information.
2. Remove the two screws **[A]** and replace the latches.

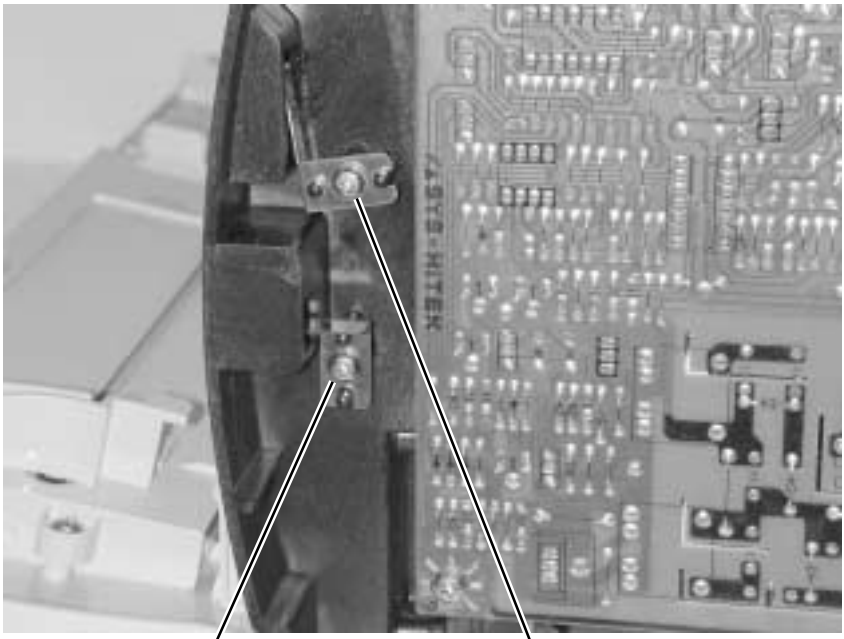

Bracket, Opener Shutter Removal

1. Remove the HVPS. See **“HVPS Card Removal” on page 4-54** for more information.
2. Remove the toner cartridge.
3. Unsnap the latches from the frame.
4. Remove the opener shutter bracket.

Note: The bracket can be removed (with possible latch breakage) by wedging a screwdriver or similar tool between the bracket and the frame.

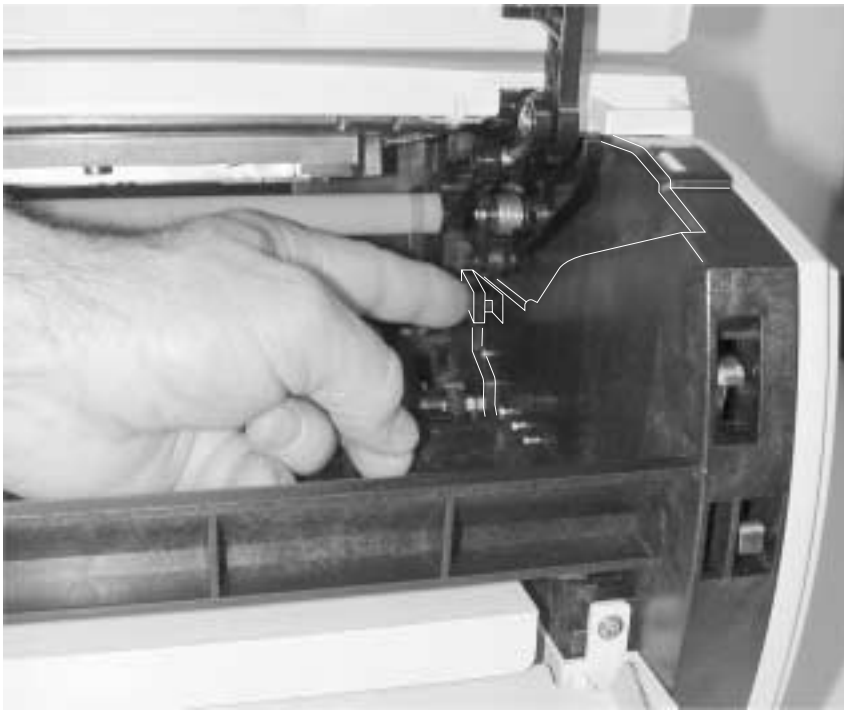

Roller Stopper Removal

1. Remove the HVPS. See **“HVPS Card Removal” on page 4-54** for more information.
2. Remove the toner cartridge.
3. Remove the upper body MPF assembly. See **“Upper (MPF) Housing Assembly (with Paper Flag) Removal” on page 4-47** for more information.
4. Unsnap the latch, which is part of the roller hub **[A]**.
5. Remove the stopper roller.

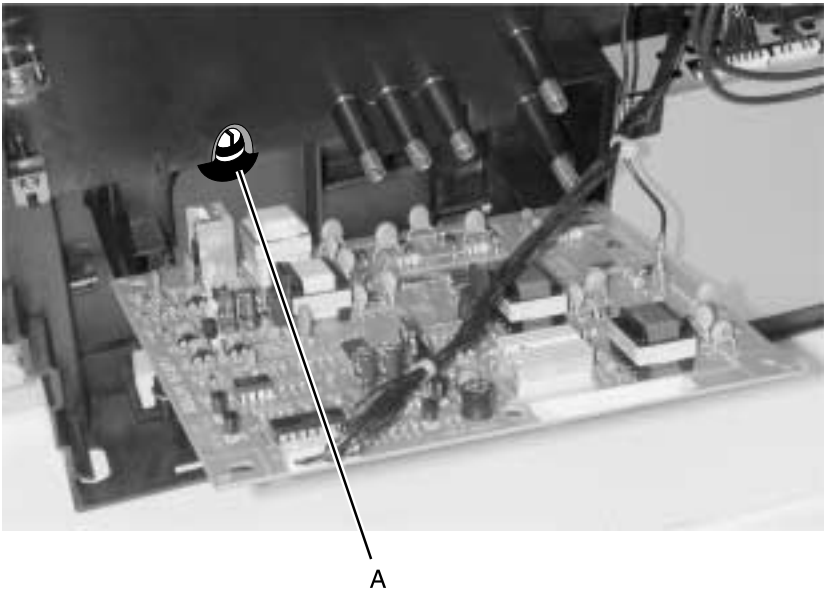

Charge Roll Removal

1. Open the front cover and remove the toner cartridge.
2. Grasp the charge roll on the left end, and push the bearing and roll away from each other.

Warning: Handle the charge roll with clean dry hands and **only** at the ends.

3. After the left side is removed from the bearing, slide the roll from the right side bearing.

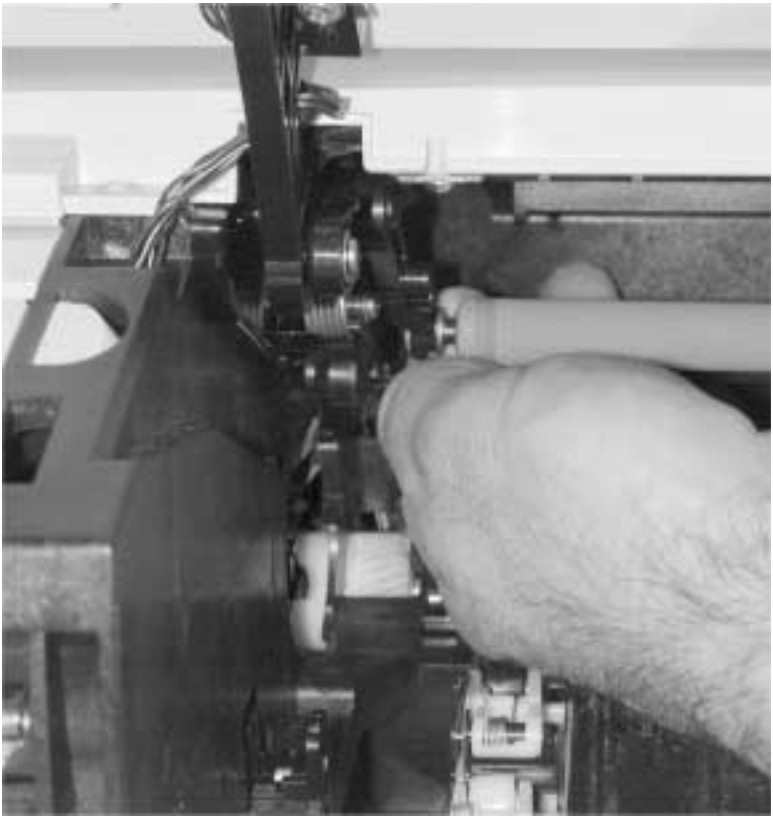

Right Guide Removal

1. Remove the toner cartridge.
2. Remove the HVPS. See **“HVPS Card Removal” on page 4-54** for more information.
3. Remove the charge roll. See **“Charge Roll Removal” on page 4-25** for more information.
4. Remove two screws in the right guide (above and behind the HVPS).
5. Remove the right stud hinge on the top cover. See **page 4-9** for more information.
6. Unsnap the three latches of the right guide.
7. Remove the right guide.

Left Guide Removal

1. Remove the toner cartridge.
2. Remove the RIP card cage. See **“RIP Card Cage (with card in place) Removal” on page 4-38** for more information.
3. Remove the charge roll. See **“Charge Roll Removal” on page 4-25** for more information.

4. Remove the three screws **[A** and **B]**, one holding the link guide bracket arm to the left guide.

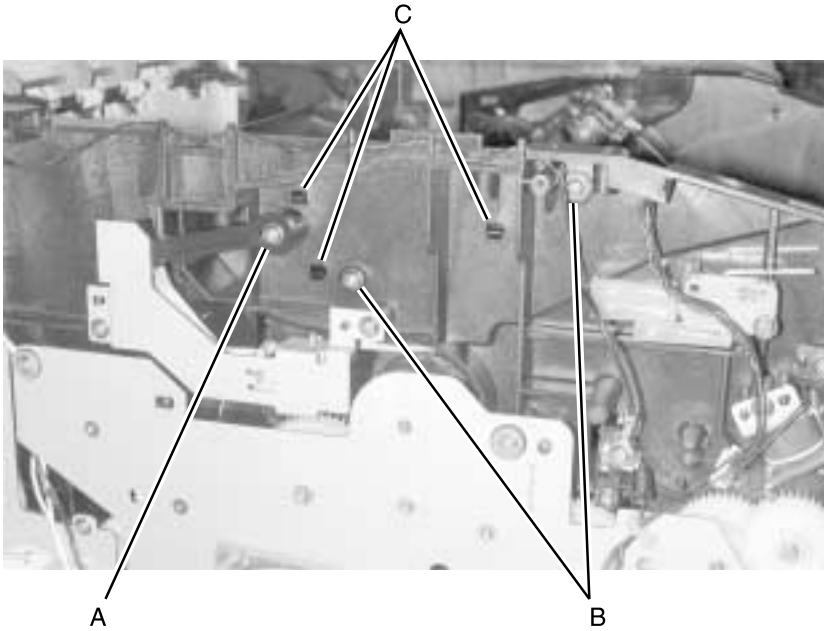

5. Remove the left stud hinge on the top cover. See step 6 on **page 4-9** for more information.
6. Remove the HVPS. See **"HVPS Card Removal" on page 4-54** for more information.

7. Disconnect the single conductor wire (spade connector) **[D]**.

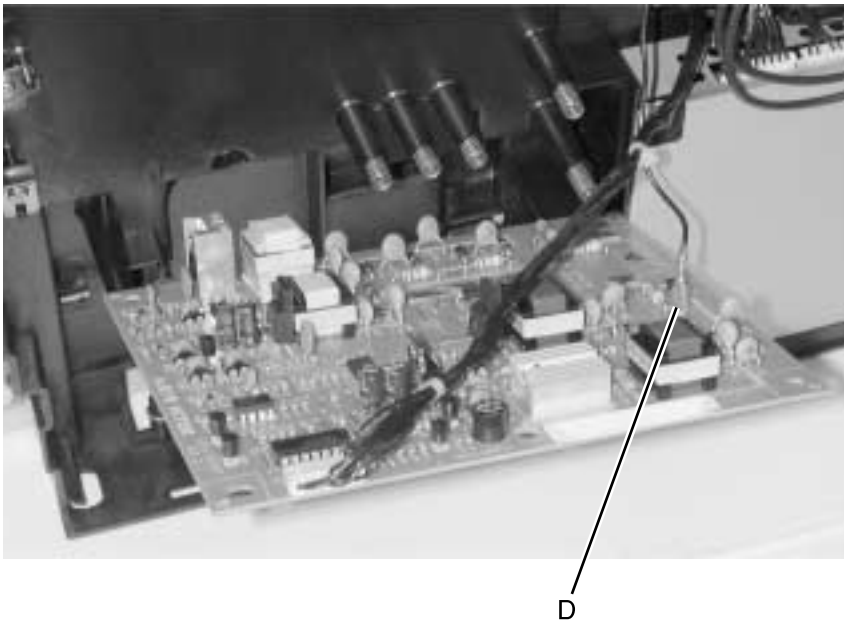

Note: Removal of the LSU (printhead) is not necessary but gives better visibility and access. Illustrations are with the LSU removed. See **“Printhead Removal” on page 4-37** for more information.

8. Remove the wire from the retainers between the printers right side and the left guide.
9. Unsnap the three latches **[C]** of the left guide while prying the assembly from the frame. See page **page 4-27** for more information.
10. Remove the left guide.

Smart Button Sensor Removal

1. Remove the toner cartridge.
2. Remove the gear train assembly. See **“Main Drive Assembly Removal” on page 4-42** for more information.
3. Remove the two screws and the bracket coupling assembly.
4. For additional clearance, remove the charge roll. See **“Charge Roll Removal” on page 4-25** for more information.
5. Remove the screw holding the smart button sensor **[A]**.
6. Remove the two screws in the cable cover retainer.
7. Remove the sensor by pushing from inside the printer.

Note: Unplug the thermistor cable to remove the smart button sensor.

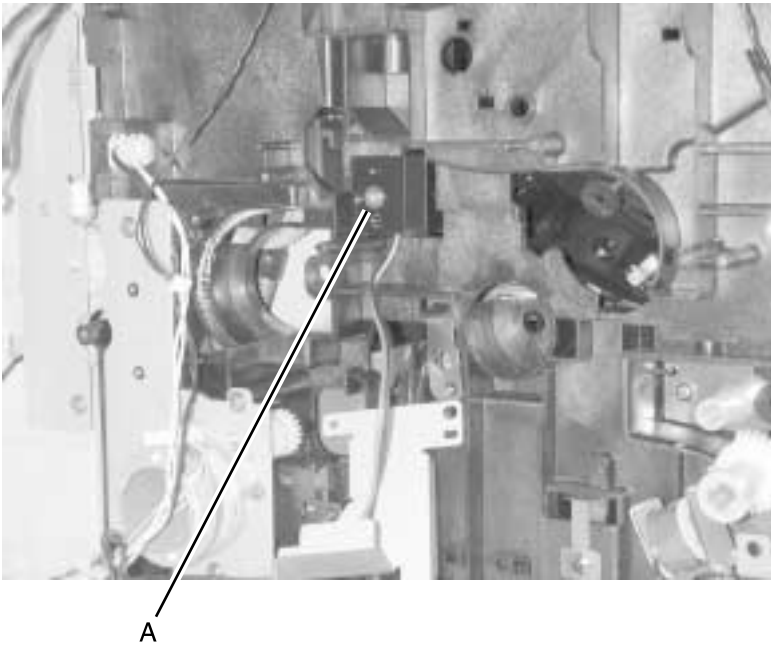

Entrance Guide Removal

1. Remove the LSU (printhead). See **“Printhead Removal” on page 4-37** for more information.
2. Remove the two screws **[A]** holding the entrance guide.

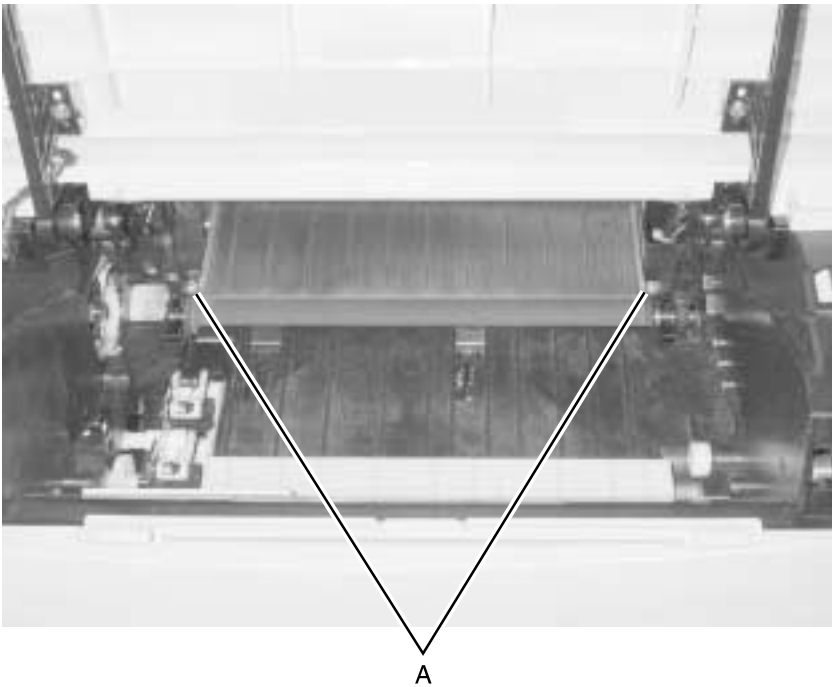

3. Remove the duplex unit. See **“Duplex Tray Assembly Removal” on page 4-17** for more information.
4. Unsnap the two latches holding the entrance guide.
5. Remove the entrance guide.
6. Check the printhead alignment and adjust as necessary. See **“Printhead Assembly Adjustment” on page 4-2** for more information.

Transfer Roll Assembly and Left Transfer Support Bearing Removal

Note: Do not touch the transfer roll except on the ends.

1. Remove the toner cartridge.
2. Unlatch and lift the left side support bearing.
3. Unlatch and lift the right transfer support bearing.
4. Remove the transfer roll.

   Note: After reinstalling the transfer roll, use a thin screwdriver to push the copper tab on the right side fully into the slot.

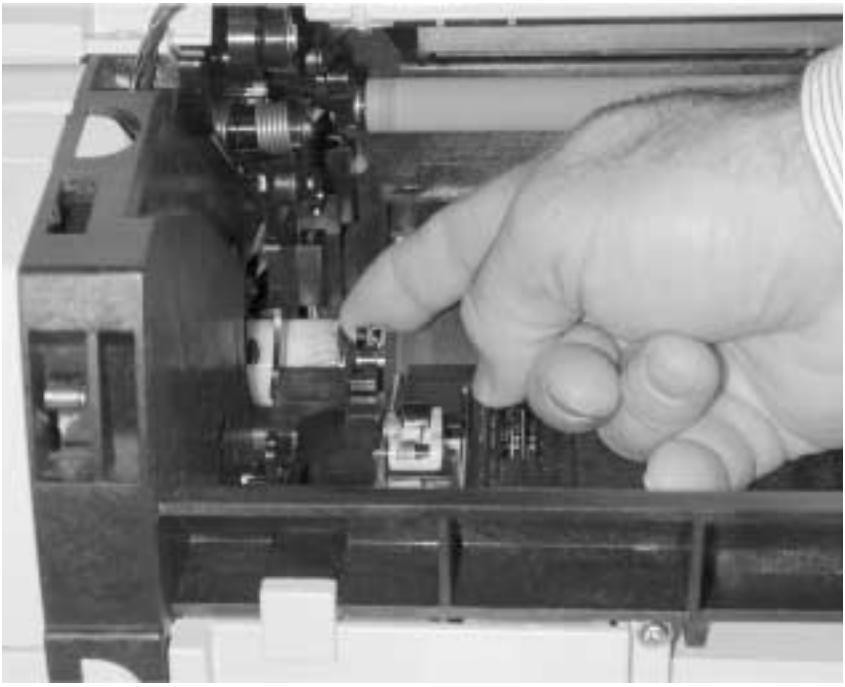

Bracket, Paper Detect (Input Sensor) Removal

1. Remove the print cartridge to expose latches in the bracket. Leave the door open.
2. Remove the duplex tray assembly. See **“Duplex Tray Assembly Removal” on page 4-17** for more information.
3. Disconnect the cable to the sensor or remove the sensor and cable together.
4. Unlatch the bracket by pushing from inside the printer and pulling from the duplex side.

D–Roll Tray 1 Feed Removal

1. Remove the left cover and inner cover for the MPF gearing. See **“Left Side Cover Removal” on page 4-12** for more information.
2. Remove the duplex tray. See **“Duplex Tray Assembly Removal” on page 4-17** for more information.
3. Disconnect extension spring **[B]** from the D–roll.
4. Release the latch on the paper feed solenoid. It is located behind the lower right corner of the main drive assembly.
5. Rotate the main drive motor counterclockwise until the D–roll clears the adjacent rib.
6. Using a slotted screwdriver as a wedge between the D–roll and bearing wall, force the D–roll to unsnap from the shaft.
7. Slide the D–roll off the tray 1 feed shaft **[A]**.

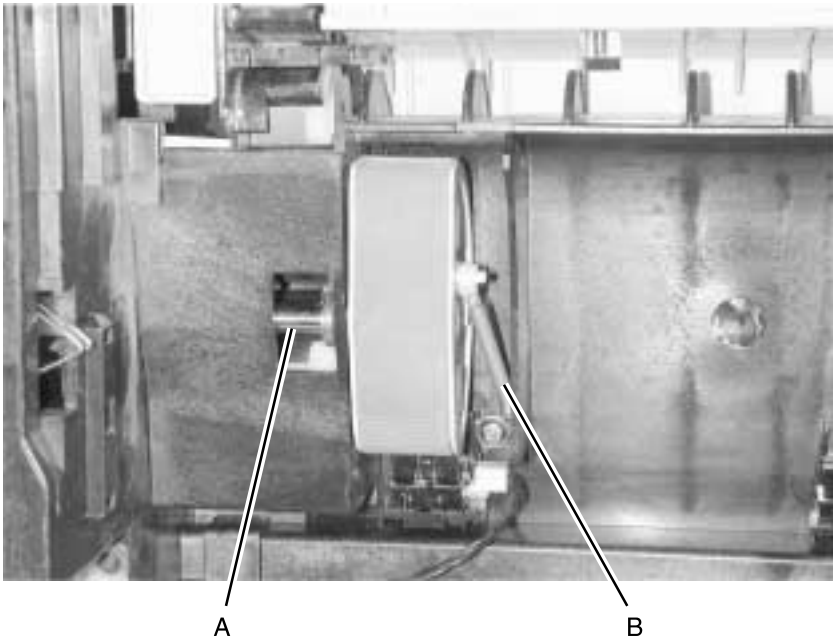

D–Roll (Tray 1) Shaft Assembly Removal

1. Remove the left side cover. See **“Left Side Cover Removal” on page 4-12** for more information.
2. Remove the inner cover.
3. Remove the MPF gear.

4. Remove the gear train assembly. See **“Main Drive Assembly Removal” on page 4-42** for more information.

5. Remove the solenoid **[B]**.

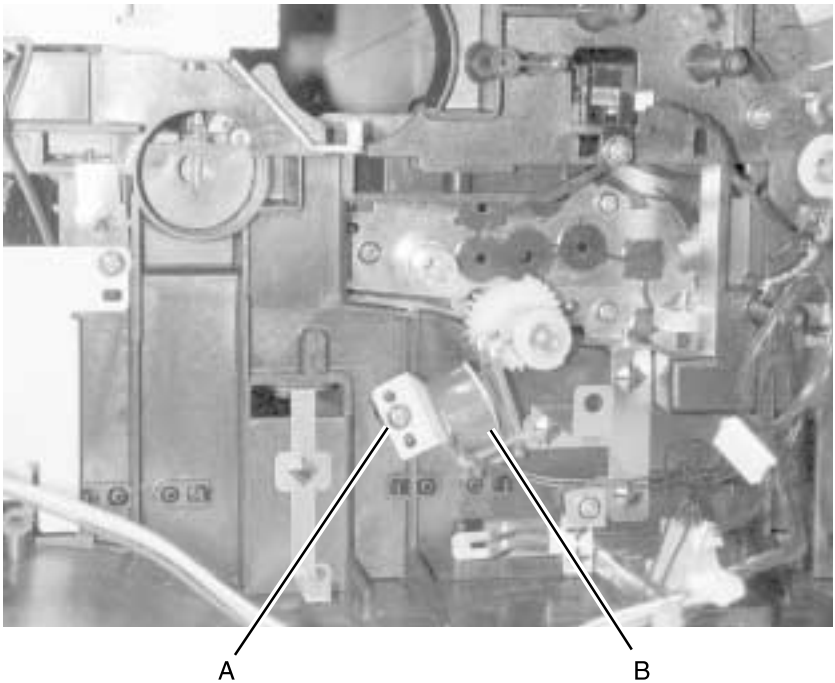

6. With the printer on its back, remove the D–roll. See **"D–Roll Tray 1 Feed Removal" on page 4-33** for more information.
7. Slowly extract the shaft while facing the D–roll end.

   Note: Capture the small washer and the bearing. (The bearing must be removed and reinserted through the opening adjacent to its operating location **[A]**. See page **page 4-33** for more information.

3–Pin and 2–Pin Connectors Removal

1. Remove the RIP card cage. See **“RIP Card Cage (with card in place) Removal” on page 4-38** for more information.
2. Remove the rear cover. See **“Rear Cover Removal” on page 4-14** for more information.
3. Unplug the wires on both sides of the connectors.
4. Unsnap connectors and remove to the left side.

Printhead Removal

1. Remove the top cover. See **“Top Cover Assembly Removal” on page 4-6.**
2. Disconnect the printhead cable.

   Note: Mark alignment of the printhead at the screw areas with the printhead to keep the same alignment upon reinstallation.

3. Remove the four screws **[A]**.
4. Remove the printhead.
5. Check alignment of the printhead before reinstalling the top cover. Adjust as necessary. See **“Printhead Assembly Adjustment” on page 4-2** for more information.

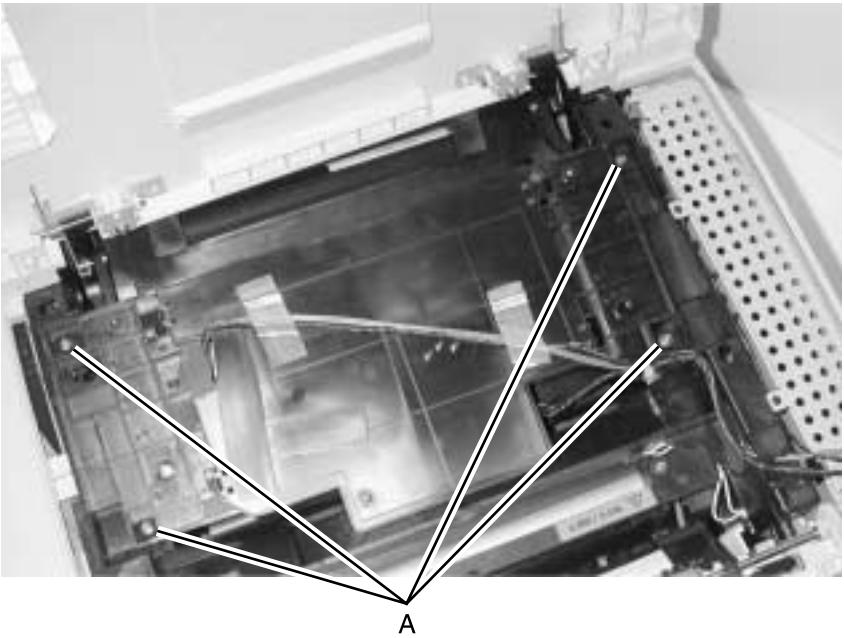

RIP Card Cage (with card in place) Removal

1. Remove the left side cover. See **“Left Side Cover Removal” on page 4-12** for more information.
2. Loosen the six screws in the controller cage cover and slide the cover off.
3. Remove the top cover. See **“Top Cover Assembly Removal” on page 4-6** for more information.
4. Disconnect all cables from the RIP card assembly.
5. Remove the inner cover. See **“Left Side Cover Removal” on page 4-12** for more information.
6. Remove the four screws in the RIP card.

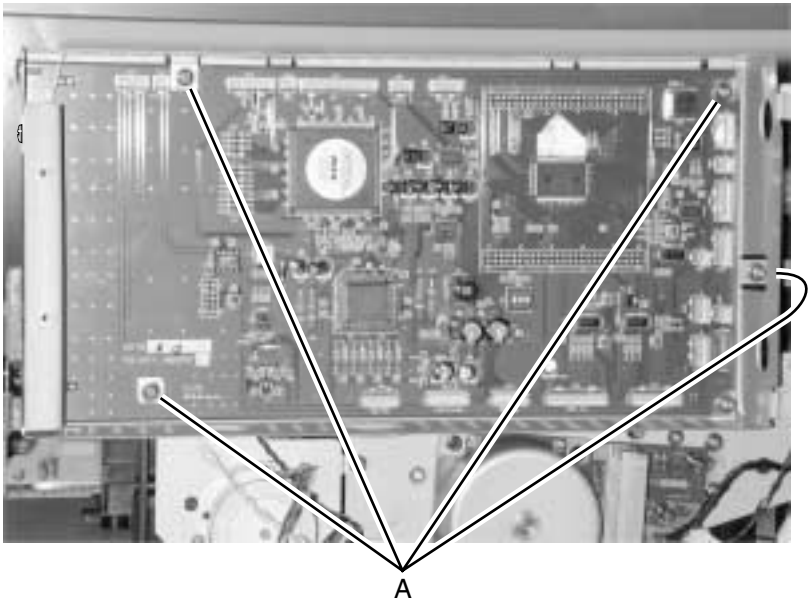

7. Gently pull the bottom of the cage out and lift up off the two posts at the top.
8. Disconnect all cables from the RIP card assembly.

RIP Card Assembly Removal

9. Remove the six screws in the RIP card **[A]**.
10. Carefully, remove the RIP card.

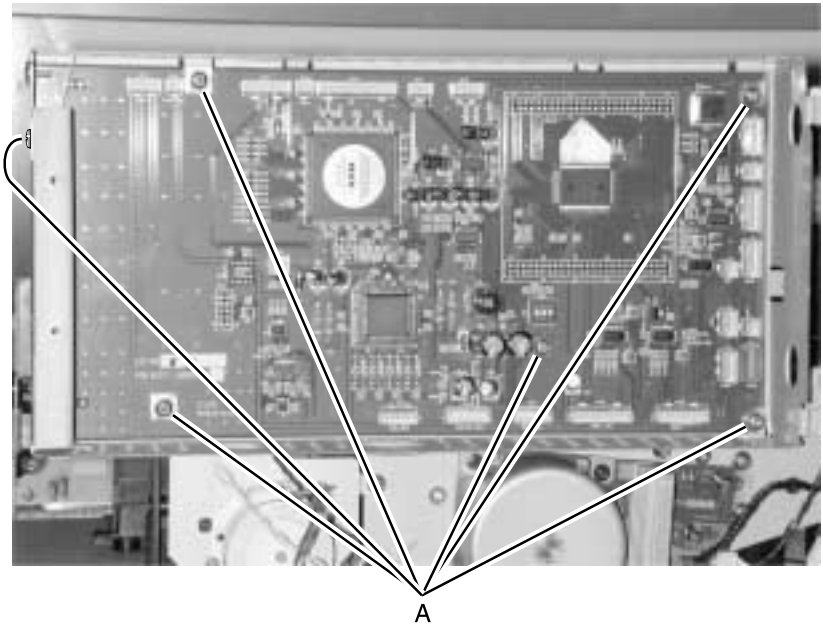

Main Drive Motor Assembly Removal

1. Remove the left side cover. See **“Left Side Cover Removal” on page 4-12** for more information.
2. Disconnect the cable to the PWB.
3. Remove the four screws holding the metal base plate to the gear train assembly.
4. Remove the motor assembly **[A]**.

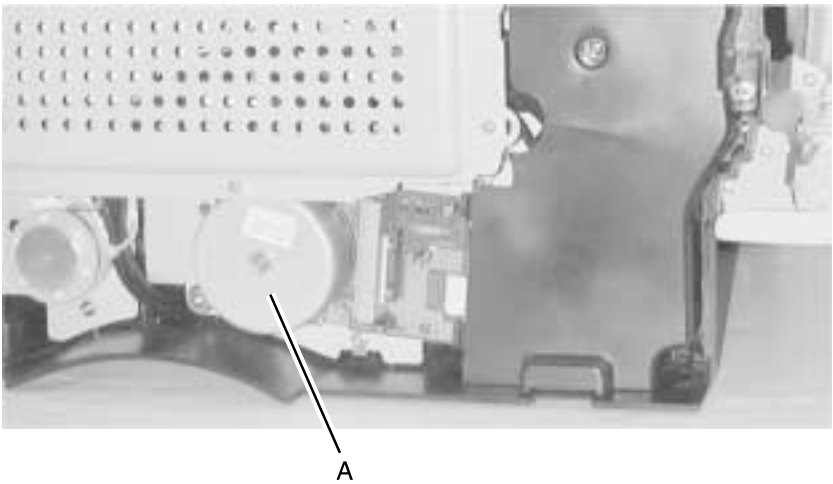

Motor Assembly (Stepper) Removal

1. Remove the top cover. See **“Top Cover Assembly Removal” on page 4-6** for more information.
2. Remove the left side cover. See **“Left Side Cover Removal” on page 4-12** for more information.
3. Remove the RIP card cage. See **“RIP Card Cage (with card in place) Removal” on page 4-38** for more information.
4. Remove two screws **[B]**.
5. Lift the stepper motor out.

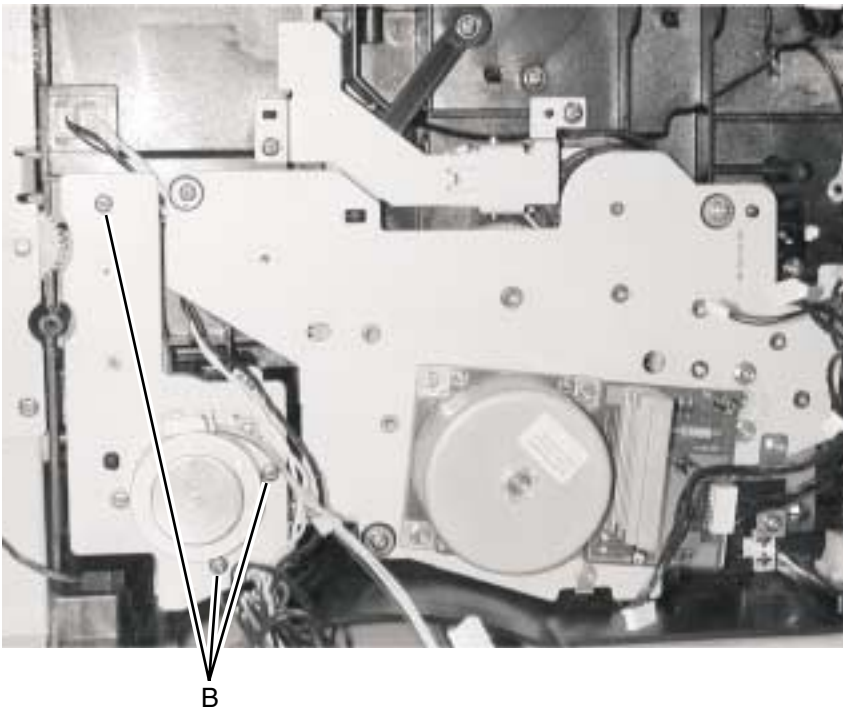

Main Drive Assembly Removal

1. Remove the top cover. See **“Top Cover Assembly Removal” on page 4-6** for more information.
2. Remove the left side cover. See **“Left Side Cover Removal” on page 4-12** for more information.
3. Remove the RIP card cage. See **“RIP Card Cage (with card in place) Removal” on page 4-38** for more information.
4. Remove the inner cover, one (1) screw.
5. Remove the roller MPF gear by lifting the latch in the center of the hub and sliding it out **[D]**.
6. Free the cables from the attached retainers.
7. Remove the six (6) screws in the gear train assembly **[A, B,** and **C]**.
8. Lift up gently and work the gear train assembly out.
9. Remove the paper feed drive gear.

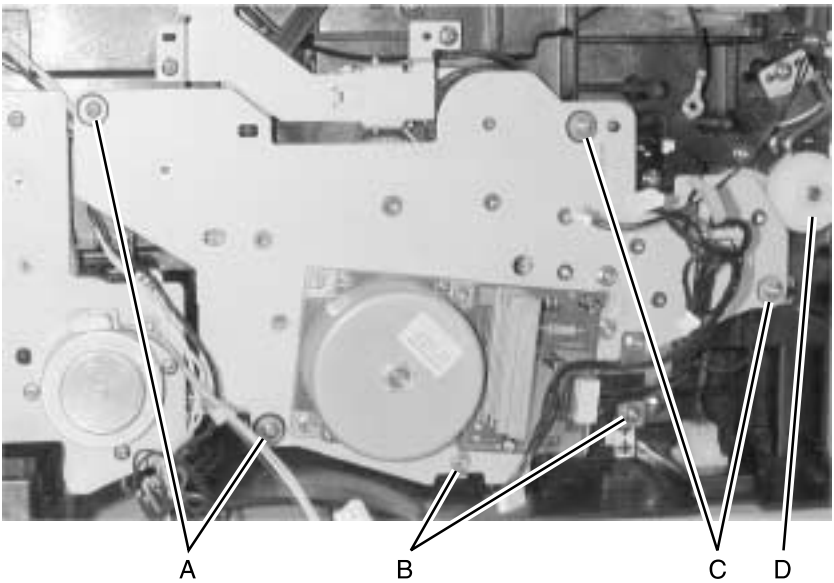
A
B
C
D

Reference Plate Assembly Removal

1. Remove the print cartridge.
2. Remove the gear train assembly. See **“Main Drive Assembly Removal” on page 4-42** for more information.
3. Remove the three screws. Located between the main gear drive and the assembly plate.
4. Remove the MPF cover. See **“Lower Front Cover (Multipurpose Feeder Cover) Removal” on page 4-4** for more information.
5. Remove the upper body MPF assembly. See **“Upper (MPF) Housing Assembly (with Paper Flag) Removal” on page 4-47** for more information.
6. Remove the lower body MPF assembly. See **“Lower (MPF) Housing Assembly - Paper Sensor Removal” on page 4-48** for more information.
7. Remove one screw in the cover adjacent to the assembly plate.

Note: Remove the reference plate assembly through the front of the printer **[A]**.

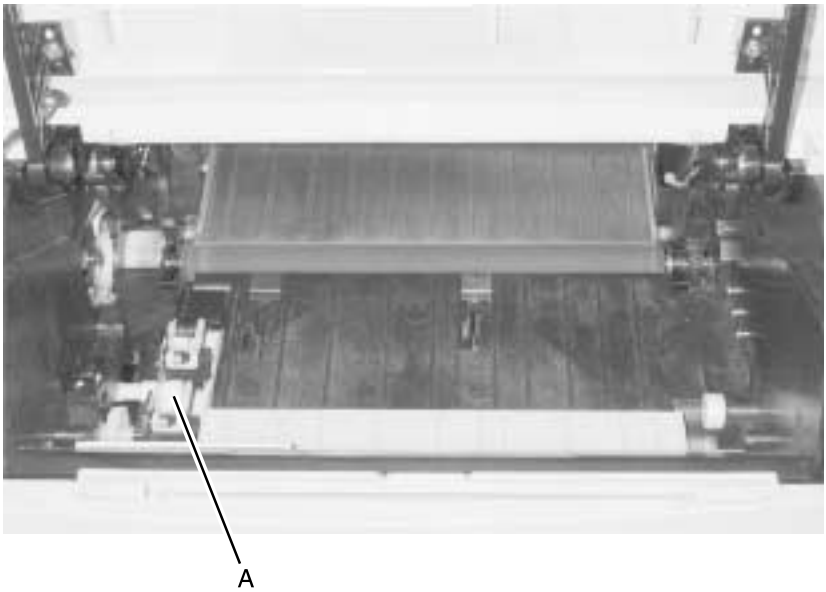

Note: When a reference plate (reference edge) assembly is removed, reinstallation requires alignment. Use a long shank (6–inches) Phillips screwdriver to adjust the rear screw holding the assembly in place. It is accessed through the hole in the main drive assembly between the RIP card cage and the main motor PCB. Adjusting the screw counterclockwise rotates paper counterclockwise in the printer path (image clockwise) and vice versa.

Cartridge Coupling Assembly Removal

1. Remove the toner cartridge.
2. Remove the top cover. See **“Top Cover Assembly Removal” on page 4-6** for more information.
3. Remove the left cover. See **“Left Side Cover Removal” on page 4-12** for more information.
4. Remove the RIP card cage. See **“RIP Card Cage (with card in place) Removal” on page 4-38** for more information.
5. Remove the two screws **[A]**.
6. Remove the bracket.

Note: The toner cartridge coupling may need to be compressed during removal.

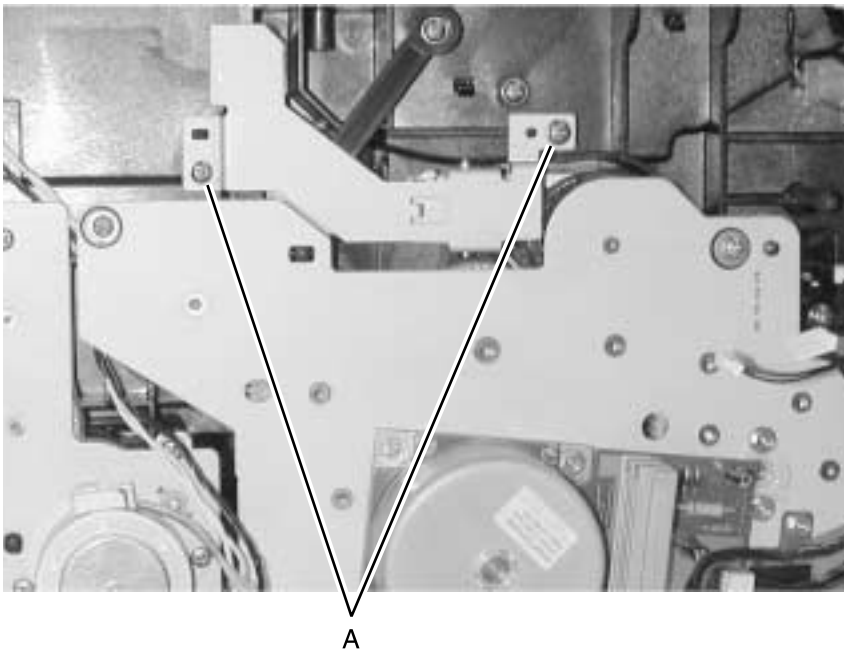

Upper (MPF) Housing Assembly (with Paper Flag) Removal

1. Open the front cover.
2. Remove two screws holding the assembly.
3. Carefully, lift the assembly out.

Note: A sensor flag is attached below.

Lower (MPF) Housing Assembly - Paper Sensor Removal

1. Remove the lower front (MPF) door. See **“Lower Front Cover (Multipurpose Feeder Cover) Removal” on page 4-4** for more information.
2. Remove the feed–roll cover, one screw.
3. At the lower–right assembly hinge, separate the metal plate from the plastic housing.

4. Support the left side with the left hand while separating the left hinge.

Note: In the next step, note a loaded compression spring **[A]** on the left side and under the metal plate.

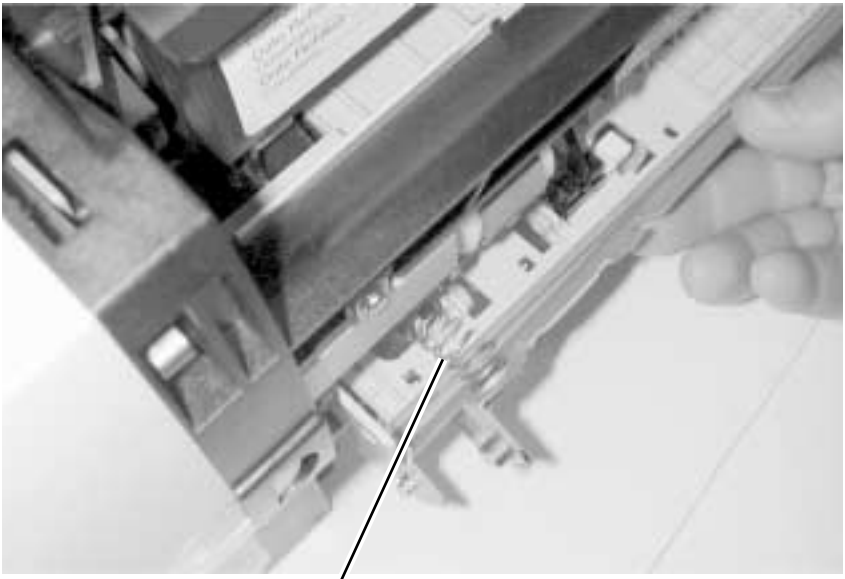

A

5. Rotate the metal plate until the sensor can be accessed.
6. Disconnect the cable to the sensor and remove the sensor by pushing on the latches underneath the sensor and housing.
7. Install the new sensor and reconnect the cable.
8. Reinstall the metal plate. Make sure the compression spring is in the proper location and captured at its ends.
9. Rotate the metal plate to keep the spring positioned. Reconnect the left hinge and then the right hinge.

Lower (MPF) Housing Assembly Removal

1. Remove the lower front MPF door. See **“Lower Front Cover (Multipurpose Feeder Cover) Removal” on page 4-4** for more information.
2. Remove the left side cover. See **“Left Side Cover Removal” on page 4-12** for more information.
3. Loosen the six screws in the RIP card cover.

   Slide the cover toward the rear and remove.
4. Disconnect the MPF cable on the right side of the RIP card and the toner level sensor.
5. Remove the three screws **[A]** on the front of the lower body MPF assembly and gently remove the assembly.

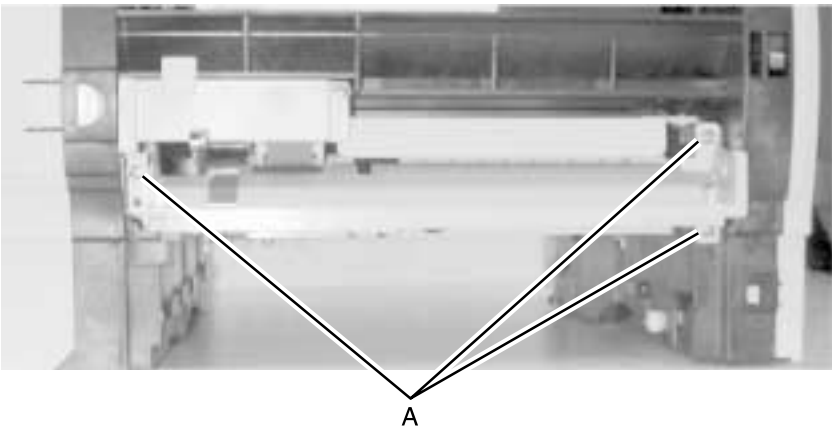

MPF Roller Assembly Removal

1. Remove the upper body MPF assembly. See **“Upper (MPF) Housing Assembly (with Paper Flag) Removal” on page 4-47** for more information.
2. Remove the MPF cover. See **“Lower Front Cover (Multipurpose Feeder Cover) Removal” on page 4-4** for more information.
3. Remove the left side and inner covers. See **“Left Side Cover Removal” on page 4-12** for more information.
4. Remove the roller cover, one (1) screw. See **“Lower (MPF) Housing Assembly Removal” on page 4-50** for more information.
5. Remove the lower body MPF assembly. See **“Lower (MPF) Housing Assembly Removal” on page 4-50** for more information.

CAUTION:

- The lower body MPF assembly remains electrically connected since it is not being replaced.
- Use care with the cable.
- Rotate the unit upside down to reduce stress on the cable.

6. Remove the MPF gear using your thumbnail to release the latch and slide the gear from the shaft.

7. Remove two screws **[A]** holding the roller assembly and one screw facing the front of the printer.

8. Remove the roller assembly.

HVPS Card Removal

1. Remove the top cover. See **“Top Cover Assembly Removal” on page 4-6** for more information.
2. Remove the right side cover. See **“Right Side Cover Removal” on page 4-11** for more information.
3. Disconnect the HVPS cable.
4. Remove the four screws **[A]**.
5. Disconnect the charge roll cable.
6. Remove the HVPS card.

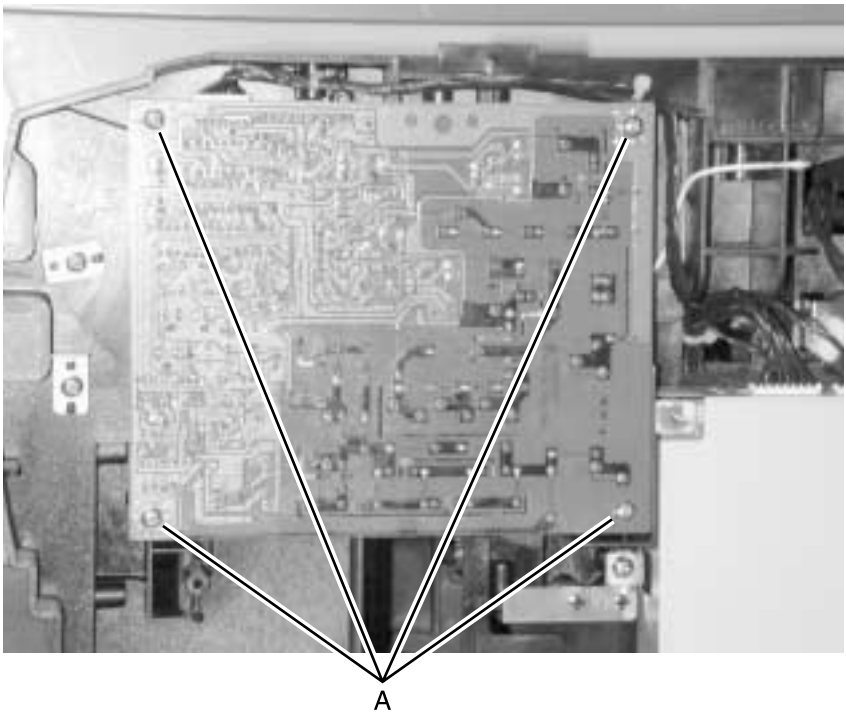

LVPS Card Removal

1. Remove the top cover. See **“Top Cover Assembly Removal” on page 4-6** for more information.
2. Remove the right side cover. See **“Right Side Cover Removal” on page 4-11** for more information.
3. Disconnect all cables attached to the LVPS card.
4. Remove the three screws **[B]**.
5. Remove the LVPS **[A]**.

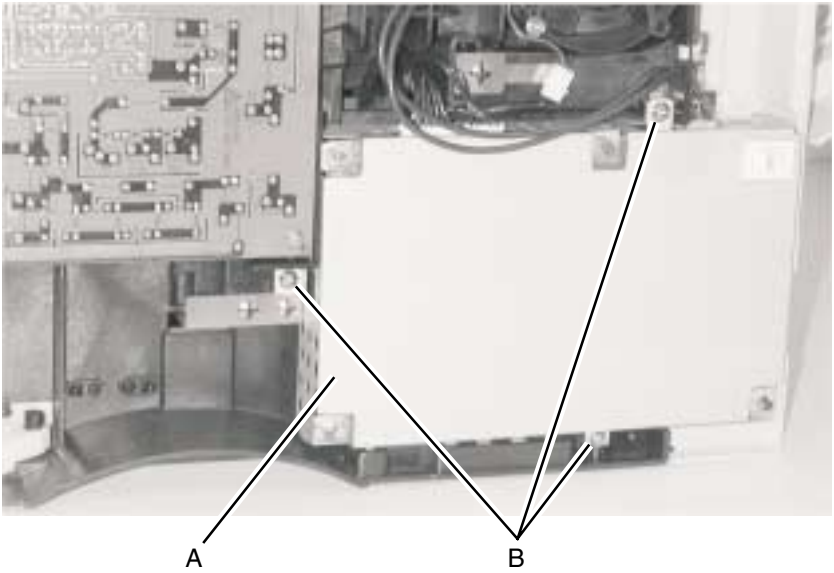

Cooling Fan Removal

1. Remove the top cover. See **“Top Cover Assembly Removal” on page 4-6** for more information.
2. Remove the right side cover. See **“Right Side Cover Removal” on page 4-11** for more information.
3. Disconnect the fan cable.
4. Remove the two screws **[A]**.
5. Remove the fan.

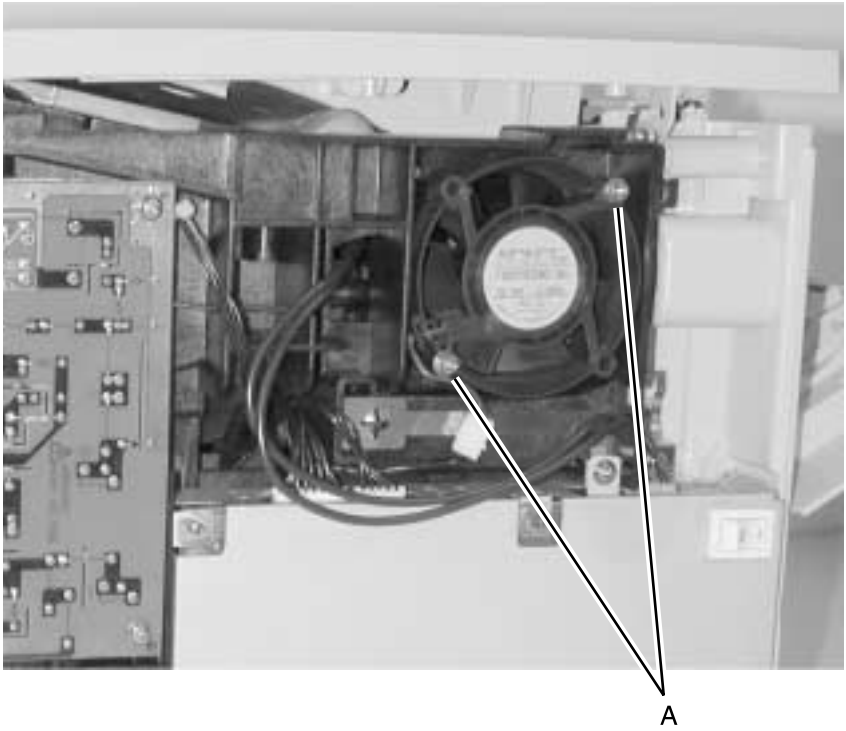

5. Locations

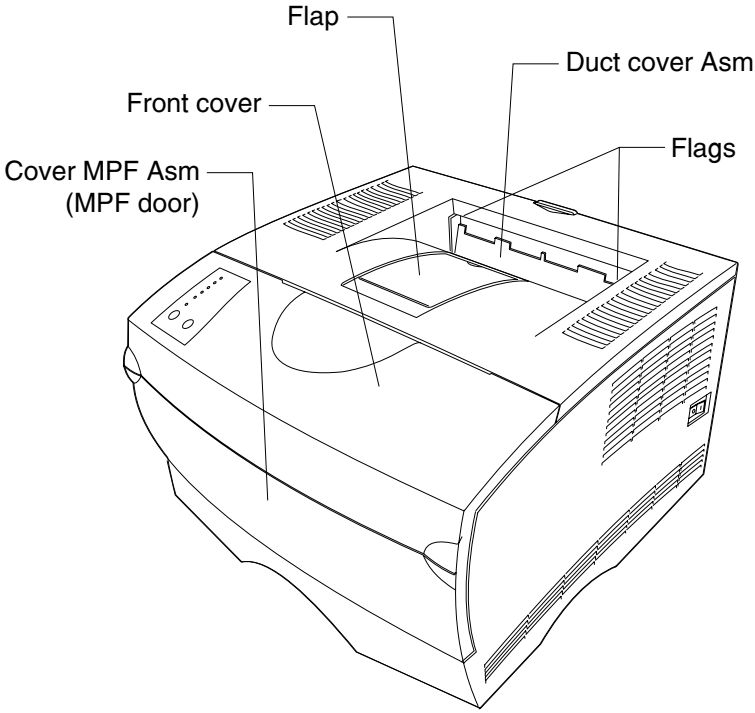

Cables

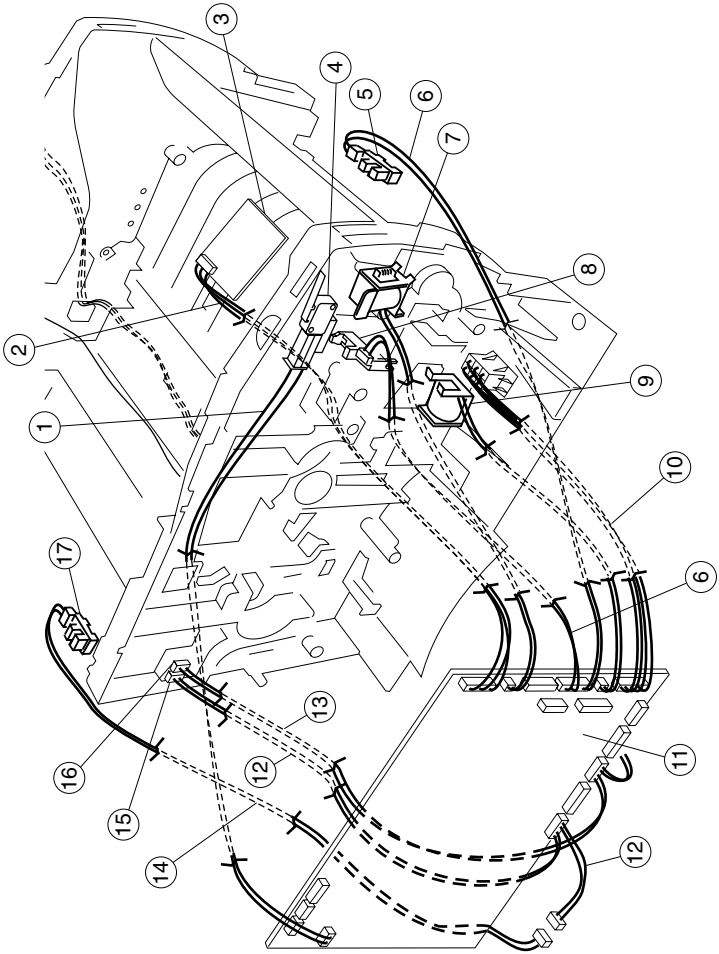

Reference	Description
1	Cable Assembly, Cover Switch
2	Cable Assembly, Operator Panel
3	Display included with P/N's 56P0601 and 56P0602
4	Switch, Interlock Cover
5 and 6	Sensor and Cable Included with P/N 56P0611
7 and 9	Solenoid, Paper Feed
8	Sensor, Toner Level
10	Cable Assembly, Drawer
11	Card Assembly, RIP
11	Card Assembly, Network RIP
12	Cable Assembly, Output Full (and Fuser Exit)
13	Sensor, Smart Button
14	Sensor Cable, Output Full
15	Connector, 3–Pin
16	Connector, 2–Pin
17	Sensor, Photo

Cables (continued)

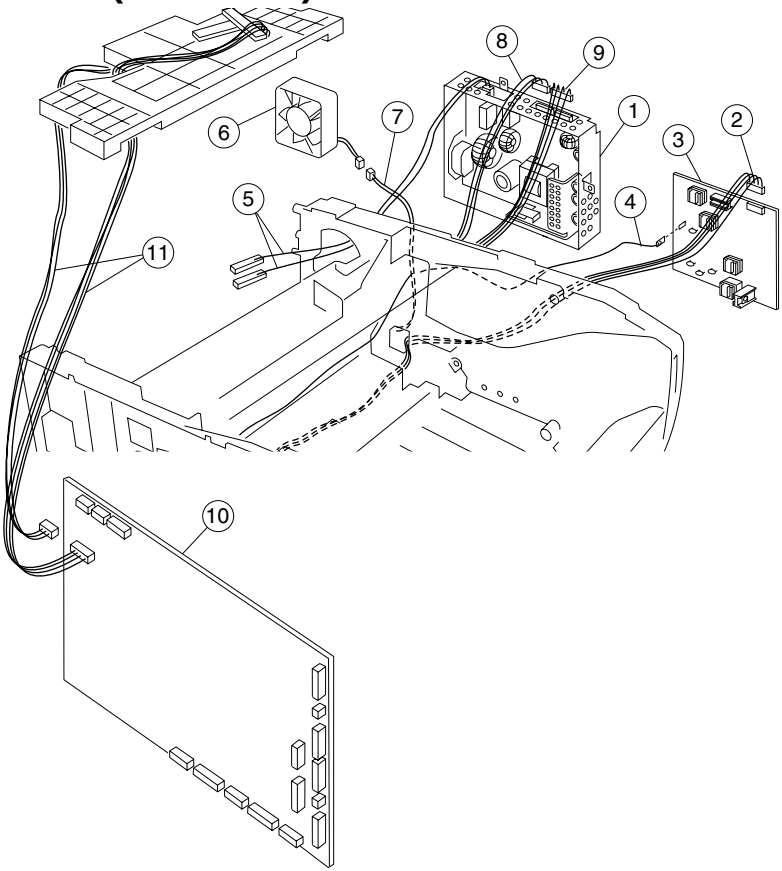

Reference	Description
1	Power Supply, 110 V
1	Power Supply, 220 V
2, 7, 8, 9	Cable Assembly, Main Harness Locations: 2. HVPS 7. Fan 8. LVPS Power 9. LVPS Control NS Paper–In, Duplex
3	Fuser PS, High Volt
4	Guide Assembly, Left
5	Cable Assembly, LVPS to Fuser
6	Fan, Cooling
10	Card Assembly, RIP
10	Card Assembly, Network RIP
11	Cable Assembly, Printhead

Sensors

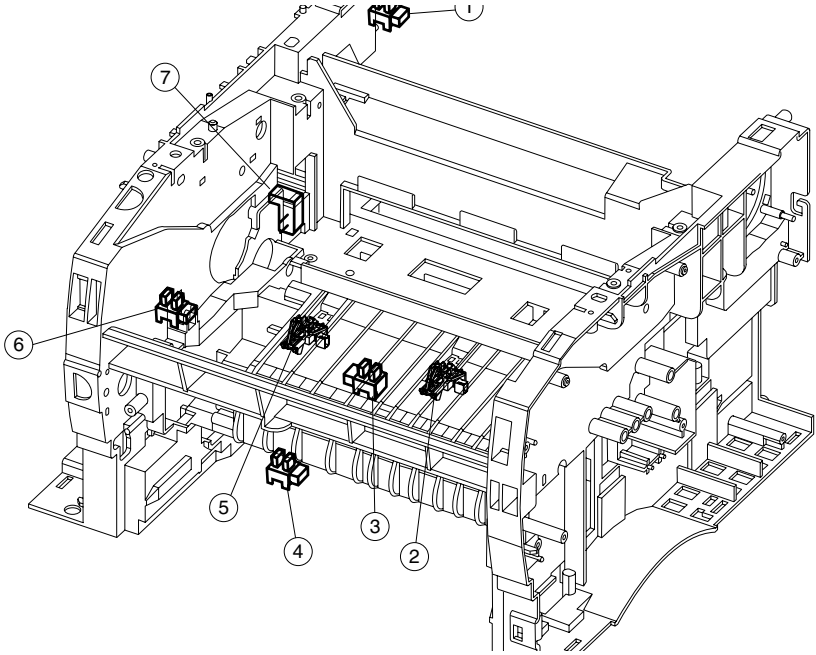

Reference	Description
1	Paper Path Exit Flag
2	Paper Path below Cartridge
3	Paper Path Duplex
4	Paper Path MPF
5	Paper Path below Cartridge
6	Sensor, Toner Level
7	Sensor, Smart Button

RIP Card Assembly

Note: Pin number 1 is designated on the printed circuit card by either a white triangle, a number 1, or both. The pin numbers follow chronologically to the opposite end of the connector.

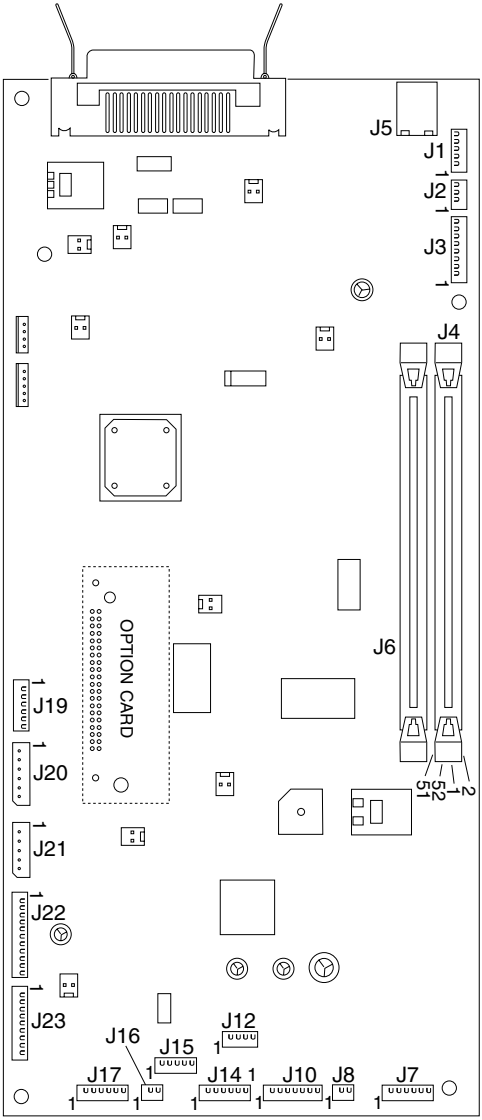

Function Name	Name on Card	# of Pins	Pin #	Signal
Mirror motor	J1–MMTR	5	4 5	Gnd. +24 V
Cover	J2–CO	3	2 3	+5 V Gnd.
LSU	J3–LSU	8	1, 5 6 7	Gnd. +5 V Gnd.
SDRAM	J4–DIMM 2	100	6, 21, 31, 42, 50 71, 81, 92, 56 1, 12, 26, 36, 47 51, 62, 76, 86, 97	+3.3 V +3.3 V Gnd. Gnd.
USB connector	J5–USB	4	1	USB power – 3.3 V
SDRAM	J6–DIMM 1	100	6, 21, 31, 42, 50 71, 81, 92, 56 1, 12, 26, 36, 47 51, 62, 76, 86, 97	+3.3 V +3.3 V Gnd. Gnd.
Operator panel lights	J7–OP PANEL	6	1 5	Gnd. +5 V
MPF solenoid	J8–MPF	2	1–2	+24 V during MPF pick
Main motor	J10–MAIN MOTOR	7	1, 6 7	Gnd. +24 V dc
Exit motor	J12–EX_MT	4	1–2	+24 V during motor run
Sensor; MPF, toner	J14–MPF SN	6	1 3 4 6	+5 V Gnd. +5 V Gnd.

Function Name	Name on Card	# of Pins	Pin #	Signal
LVPS control	J15–LVPS	5	5	Gnd.
Paper feed solenoid	J16–FD	2	1–2	+24 V during tray 1 pick
2nd drawer interface	J17–TRAY2	6	5 6	Gnd. +24 V
Fuser exit tray full sensor	J19–P EXIT	6	1 3 4 6	+5 V Gnd. +5 V Gnd.
LVPS DC power	J20–POWER	6	1, 2 3, 4 5 6	+24 V Gnd. +5 V Gnd.
Thermistor, Smart IC	J21–THERM	5	2, 5	Gnd.
HVPS	J22–HVPS	11	1 2 5 7	+24 V–fan Gnd.–fan Gnd. +24 V
Sensor: paper input, narrow, duplex	J23–Paper–IN Duplex	9	1, 4, 7 3, 6, 9	+5 V Gnd.

Power Supply (LVPS)

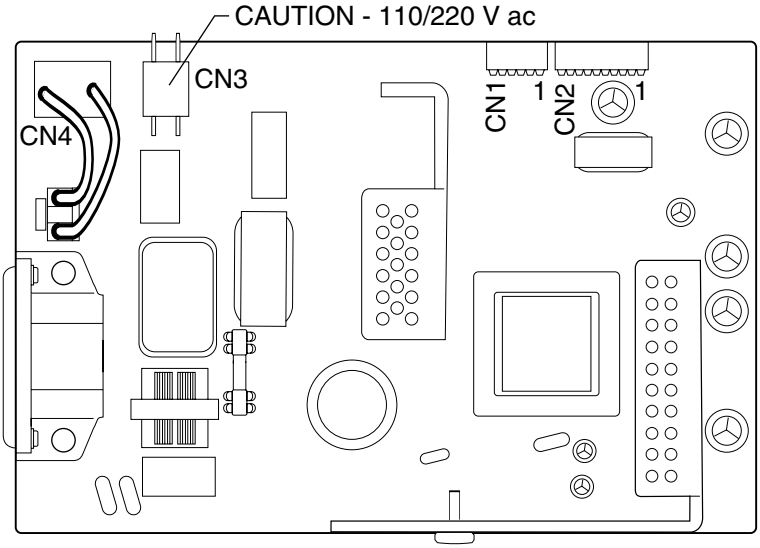

Function Name	Name on Card	# of Pins	Pin #	Signal
110 / 220 Volts	CN1 CN2	5 8	1 1, 2, 5, 6 3, 4 7, 8	+5 V dc Gnd. +5 V dc +24 V dc
Heater	CN3	2	1–2	110 / 220 V ac
On/off switch	CN4–S/W	2	1–2	110 / 220 V ac

High Voltage Power Supply (HVPS)

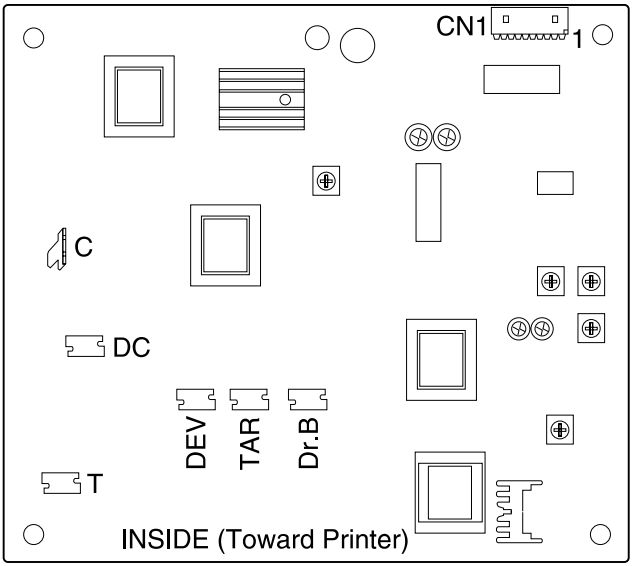

Function Name	Name on Card	# of Pins	Pin #	Signal
To RIP	J16–CN1	8	2 4 7	Gnd. +24 V dc +5 V dc
Charge roll	C	Terminal	1	

6. Preventive Maintenance

This chapter describes procedures for printer preventive maintenance. Following these recommendations can help prevent problems and maintain optimum performance.

Safety Inspection Guide

The purpose of this inspection guide is to aid you in identifying unsafe conditions.

If any unsafe conditions exist, find out how serious the hazard could be and if you can continue before you correct the hazard.

Check the following items:

- Damaged, missing, or altered parts, especially in the area of the on/off switch and the power supply.
- Damaged, missing, or altered covers, especially in the area of the top cover and the power supply cover.
- Possible safety exposure from any non–Lexmark attachments.

Lubrication Specifications

Lubricate only when parts are replaced or as needed, not on a scheduled basis. Use of lubricants other than those specified can cause premature failure. Some unauthorized lubricants may chemically attack polycarbonate parts. Use IBM no. 10 oil, P/N 1280443 (approved equivalents: Mobil DTE27, Shell Tellus 100, Fuchs Renolin MR30), IBM no. 23 grease (approved equivalent: Shell Darina 1), and grease, P/N 99A0394 to lubricate appropriate areas of the printer.

7. Parts Catalog

How to Use This Parts Catalog

- SIMILAR ASSEMBLIES: If two assemblies contain a majority of identical parts, they are shown on the same list. Common parts are shown by one index number. Parts peculiar to one or the other of the assemblies are listed separately and identified by description.
- AR: (As Required) in the Units column indicates that the quantity is not the same for all machines.
- NS: (Not Shown) in the Asm-Index column indicates that the part is procurable but is not pictured in the illustration.
- PP: (Parts Packet) in the parts description column indicates the part is contained in a parts packet.

Assembly 1: Covers

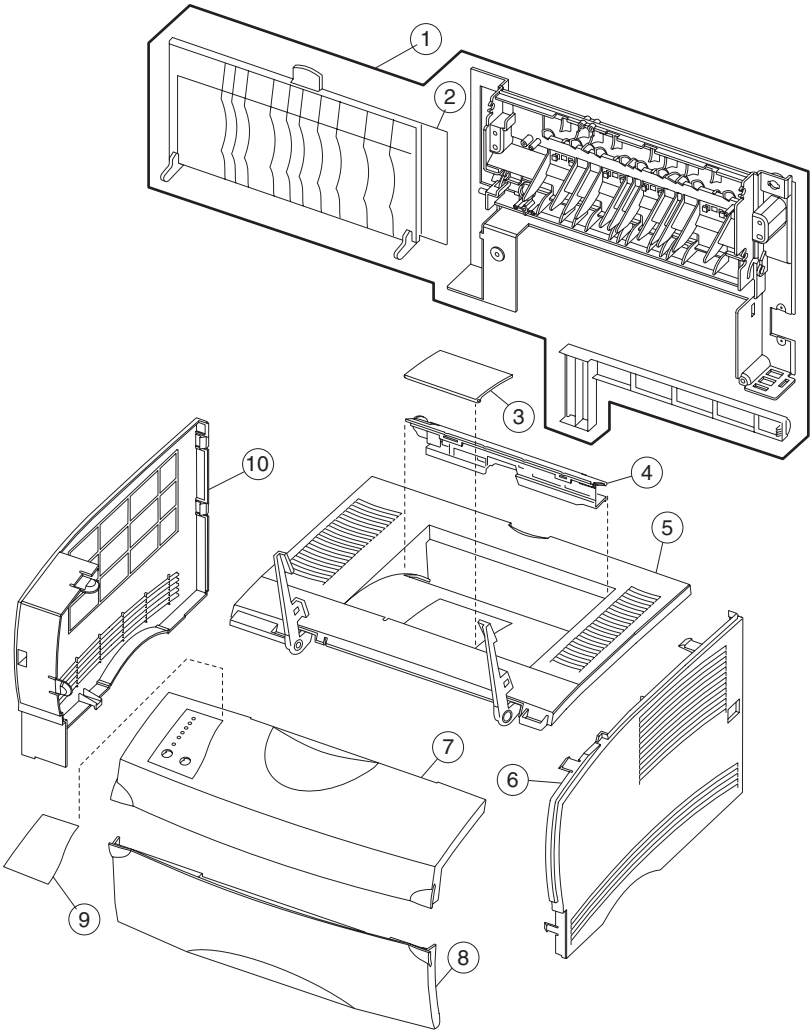

Assembly 1: Covers

Asm-Index	Part Numbers	Units	Description
1–1	56P2508	1	Cover Assembly, Rear
2	56P0607	1	Door Assembly, Rear Exit
3	56P0680	1	Flap, Paper Holder
4	56P0603	1	Cover Assembly, Duct
5	56P0604	1	Cover Assembly, Top
6	56P0605	1	Cover Assembly, Right
7	56P0602	1	Cover Assembly, Front with Display (with logo)
8	56P0610	1	Cover Assembly, MPF Door
9	56P0679	1	Overlays, Language
10	56P0600	1	Cover Assembly, Left

Assembly 2: Multipurpose Feeder (MPF)

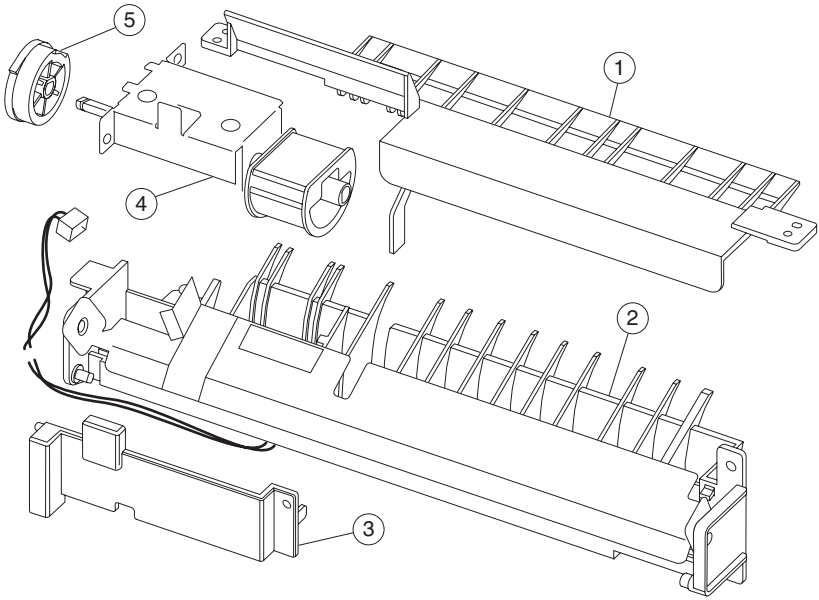

Assembly 2: Multipurpose Feeder (MPF)

Asm-Index	Part Numbers	Units	Description
2–1	56P0612	1	Housing Assembly, Upper (MPF)
2	56P0611	1	Housing Assembly, Lower (MPF)
3	56P0615	1	Cap, MPF Paper Feed Cover
4	56P0613	1	MFP pick roller arm assembly (MFP Roller Pick Tire only - PN 56P2181)
5	56P0614	1	Gear, MPF Paper Pick

Assembly 3: Charging

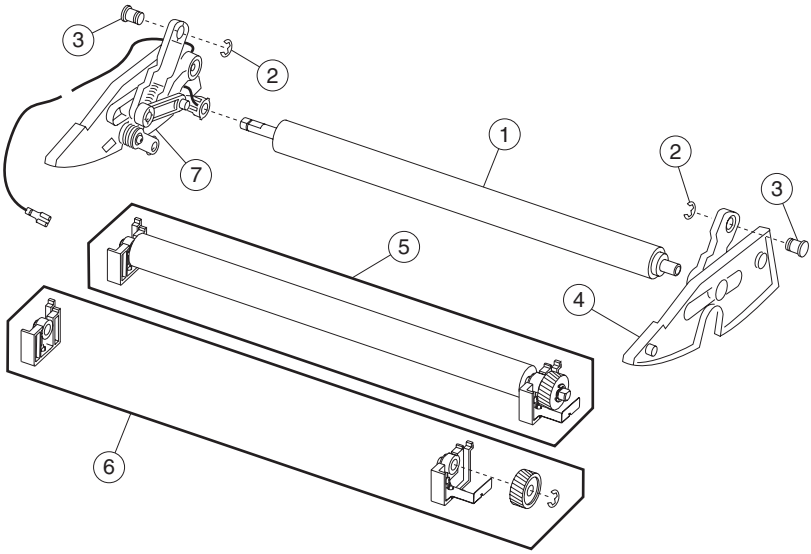

Assembly 3: Charging

Asm-Index	Part Numbers	Units	Description
3–1	56P0640	1	Roll, Charge
2	56P0668	1	Parts Pack, (Screws and E–Rings)
3	56P0669	1	Hinge, Pivot (quantity 2)
4	56P0642	1	Guide Assembly, Right
5	56P0643	1	Assembly, Transfer Roll
6	56P0644	1	Bearings, Transfer Roll
7	56P0641	1	Guide Assembly, Left

Assembly 4: Electronics and Cables

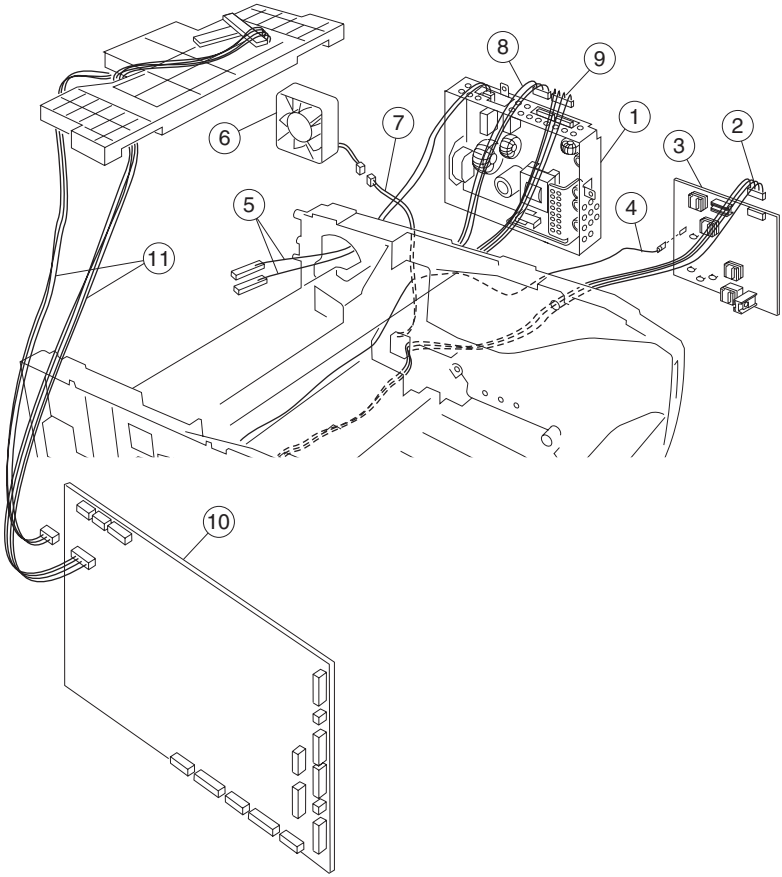

Assembly 4: Electronics and Cables

Asm-Index	Part Numbers	Units	Description
4–1	56P0626	1	Power Supply, 110 V
1	56P0627	1	Power Supply, 220 V
2, 7, 8, 9	56P0663	1	Cable Assembly, Main Harness Locations: 2. HVPS 7. Fan 8. LVPS Power 9. LVPS Control NS Paper–In, Duplex
3	56P0628	1	Fuser PS, High Volt
4	56P0641	1	Guide Assembly, Left
5	56P0650	1	Cable Assembly, LVPS to Fuser
6	56P0630	1	Fan, Cooling
10	56P1031	1	Card Assembly, RIP
10	56P1030	1	Card Assembly, Network RIP
11	56P0622	1	Cable Assembly, Printhead

Assembly 4 (cont.): Electronics and Cables

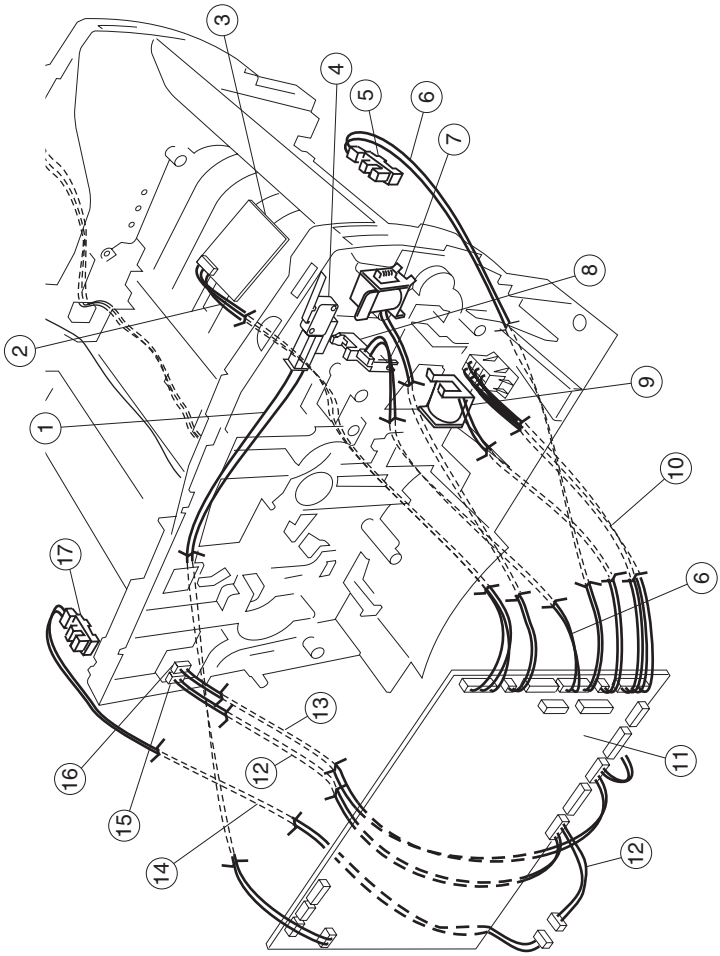

Assembly 4 (cont.): Electronics and Cables

Asm-Index	Part Numbers	Units	Description
4–1	56P0624	1	Cable Assembly, Cover Switch
2	56P0621	1	Cable Assembly, Operator Panel
3			Display included with P/N 56P0602
4	56P0625	1	Switch, Interlock Cover
5 and 6			Sensor and Cable Included with P/N 56P0611
7and 9	56P0616	2	Solenoid, Paper Feed
8	56P0653	1	Sensor, Toner Level
10	56P0631	1	Cable Assembly, Drawer
11	56P1031	1	Card Assembly, RIP
11	56P1030	1	Card Assembly, Network RIP
12	56P0664	1	Cable Assembly, Output Full (and Fuser Exit)
13	56P0652	1	Sensor, Smart Button
14	56P0682	1	Sensor Cable, Output Full
15	56P0665	1	Connector, 3–Pin
16	56P0666	1	Connector, 2–Pin
17	56P0645	1	Sensor, Photo
NS	56P0649	1	Cable Assembly, Fuser Exit
NS	56P0620	1	Cable Assembly, Motor

Assembly 4 (cont.): Electronics and Cables

This page left intentionally blank.

Assembly 4 (cont.): Electronics and Cables

Asm-Index	Part Numbers	Units	Description
NS	53P7923	1	Power Cord, Bolivia, Canada, Caribbean Countries, Columbia, Costa Rica, Dominican Republic, Equador, El Salvador, Guatemala, Honduras, Japan, Mexico, Nicaragua, Peru, Panama, Puerto Rico, Saudi Arabia, Taiwan, The Virgin Islands, Venezuela, US, AP–LV
NS	1339528	1	Power Cord, Bahrein, Cyprus, Ireland, Kuwait, Oman, Qatar, UAE, UK, Yemen, (HV)
NS	1339529	1	Power Cord, Austria, Belgium, Bosnia, Bulgaria, Catalan, Czech, Croatia, Egypt, Albania (Euro English and other East), Finland, France, Germany, Greece, Hungary, Iceland, Italy, Jordan, Lebanon, Macedonia, Netherlands, Norway, Paraguay, Poland, Portugal, Romania, Russia, and CIS, Slovak Countries, Slovenia, Spain, Sweden, Turkey, Yugoslavia (Serbia and Montenegro)(HV)
NS	1339530	1	Power Cord, Israel (HV)
NS	1339531	1	Power Cord, Switzerland (HV)
NS	1339532	1	Power Cord, Pakistan, South Africa (HV)
NS	1339533	1	Power Cord, Chile, Uruguay (HV)
NS	1339534	1	Power Cord, Denmark (HV)
NS	53P7600	1	Power Cord, PR China (HV)
NS	53P7104	1	Power Cord, Brazil (LV)
NS	53P7103	1	Power Cord, Argentina
NS	1339520	1	Power Cord, U.S. (HV) RPQ

Assembly 5: Paper Feed

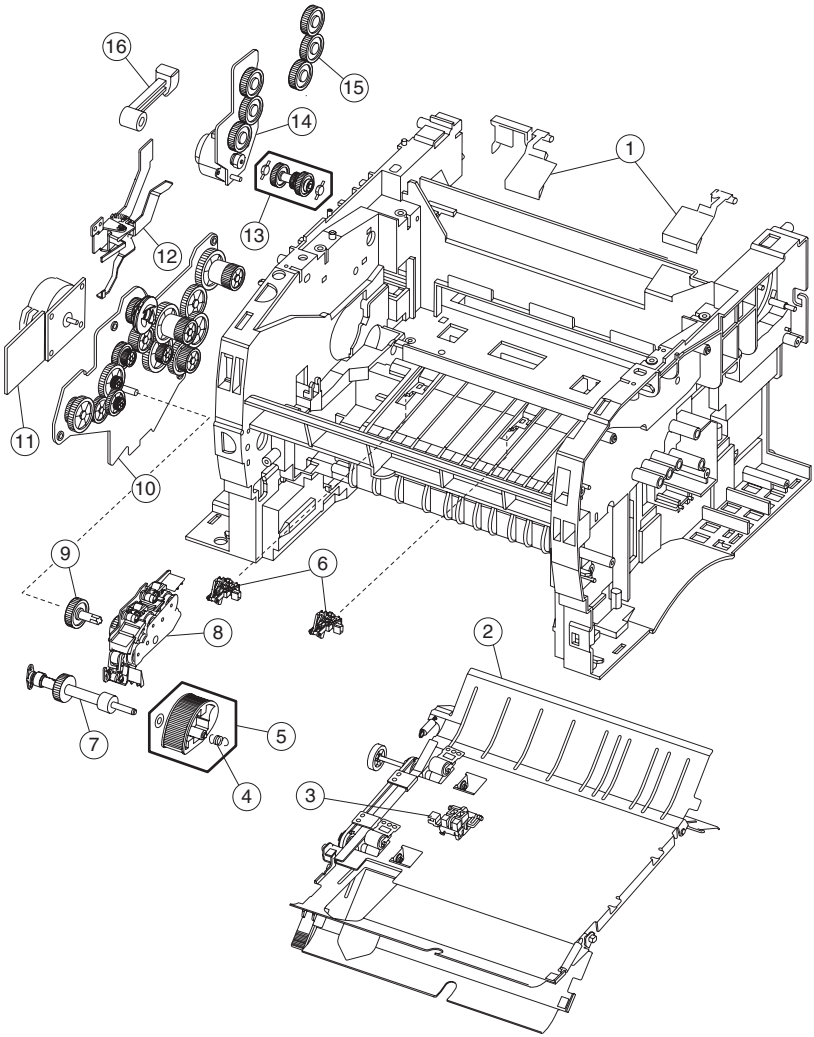

Assembly 5: Paper Feed

Asm-Index	Part Numbers	Units	Description
5–1	56P0677	1	Flags, Stack Control
2	56P0651	1	Assembly, Duplex
3	56P0645	1	Sensor, Photo
4	56P0618	1	Spring, D–Roll
5	56P0656	1	Roll, Paper Feed
6	56P0655	2	Bracket, Paper Sensor
7	56P0657	1	Assembly, Paper Feed
8	56P0654	1	Plate Assembly
9	56P0634	1	Gear, Paper Feed
10	56P0633	1	Assembly, Drive
11	56P0632	1	Motor Assembly, Main Drive
12	56P0638	1	Coupling, Cartridge
13	56P0637	1	Drive, Ratchet
14	56P0635	1	Assembly, Motor
15	56P0636	1	Gears, Spur
16	56P0639	1	Guide, Link

Assembly 6: Frame

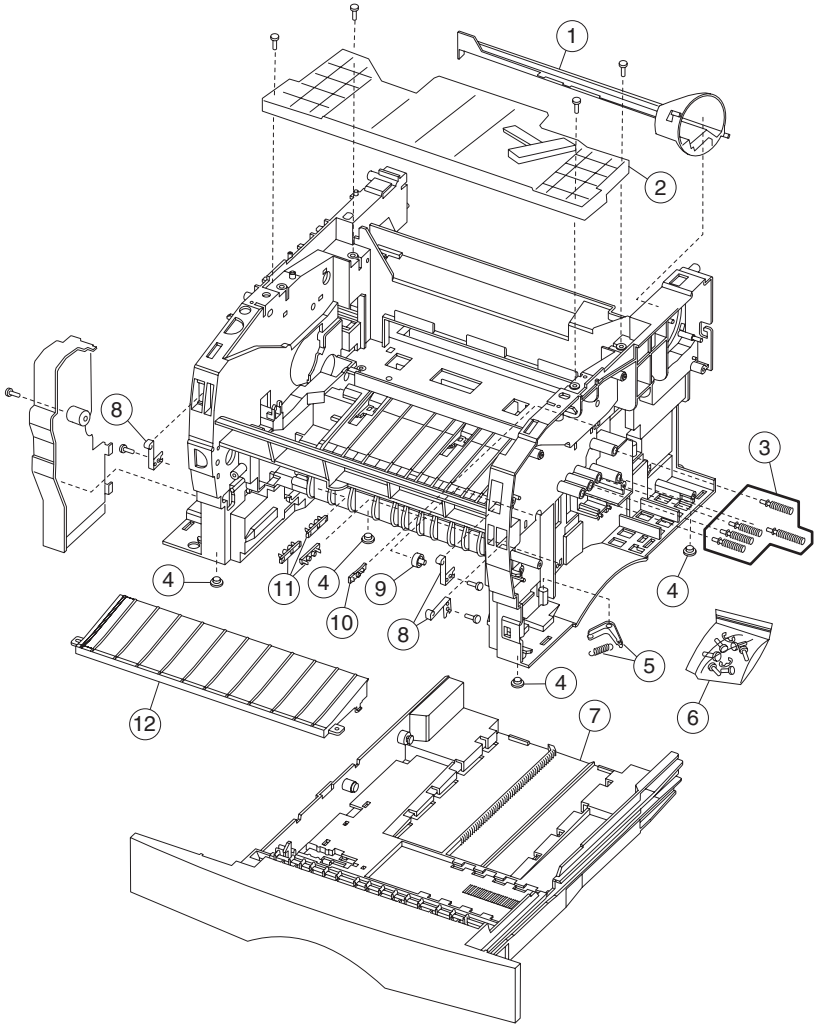

Assembly 6: Frame

Asm-Index	Part Numbers	Units	Description
6–1	56P0606	1	Duct, Air
2	56P0623	1	Assembly, Printhead
3	56P0629	1	Assembly, Cartridge Contacts (quantity 5)
4	56P0662	4	Feet, Base
5	56P0661	1	Damper, Tray
6	56P0668	1	Parts Pack, (Screws and E–Rings)
7	56P0609	1	Assembly, Tray 1
8	56P0667	1	Latch, Door (Qty. 3)
9	56P0660	1	Roller, Paper Guide
10	56P0659	1	Bracket, Shutter
11	56P0672	1	Bracket, Body–Tray (qty 3)
12	56P0658	1	Guide, Entrance

Assembly 7: Fuser

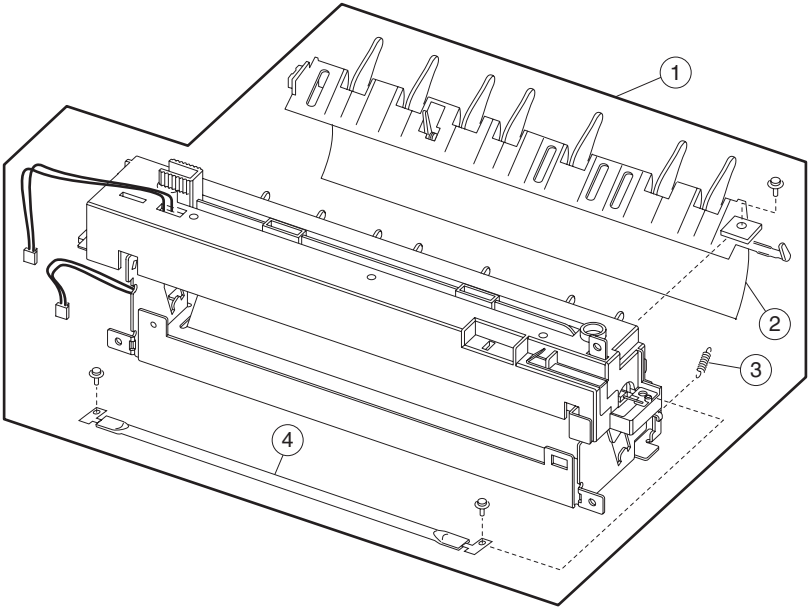

Assembly 7: Fuser

Asm-Index	Part Numbers	Units	Description
7–1	56P0648	1	Assembly, Fuser (110 V)
1	56P0671	1	Assembly, Fuser (220 V)
2	56P0673	1	Fuser Assembly, Paper Guide
3	56P0676	1	Spring, Fuser Exit
4	56P0646	1	Lamp, Fuser (110 V)
4	56P0647	1	Lamp, Fuser (220 V)

Assembly 8: Sensors

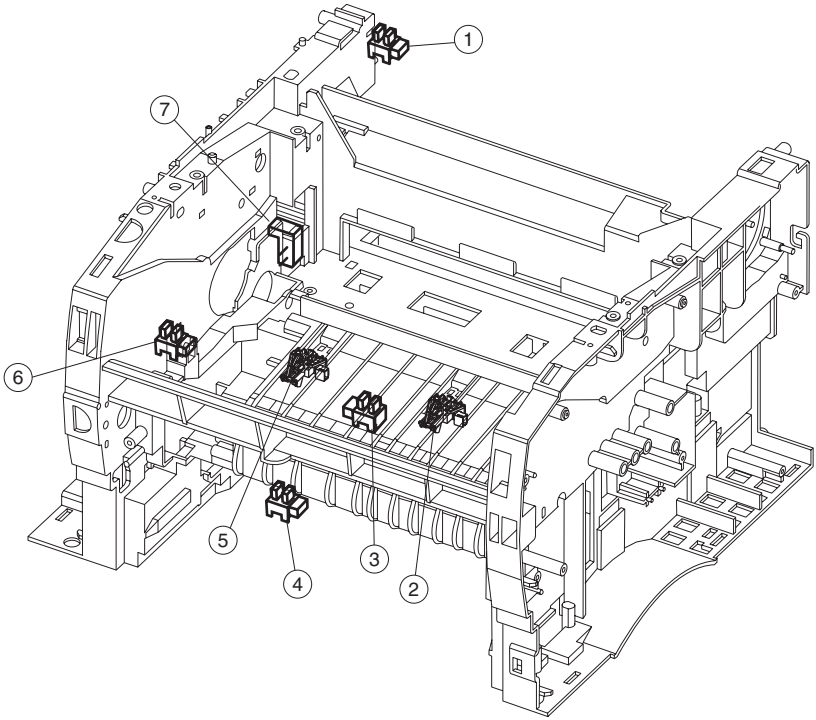

Assembly 8: Sensors and Locations

Asm-Index	Part Numbers	Units	Description
8 1–5	56P0645	1	Sensor, Photo Locations: 1. Paper Path Exit Flag 2. Paper Path below Cartridge 3. Paper Path Duplex 4. Paper Path MPF 5. Paper Path below Cartridge
2, 5	56P0655	2	Bracket, Paper Sensor
6	56P0653	1	Sensor, Toner Level
7	56P0652	1	Sensor, Smart Button

Assembly 9: Options

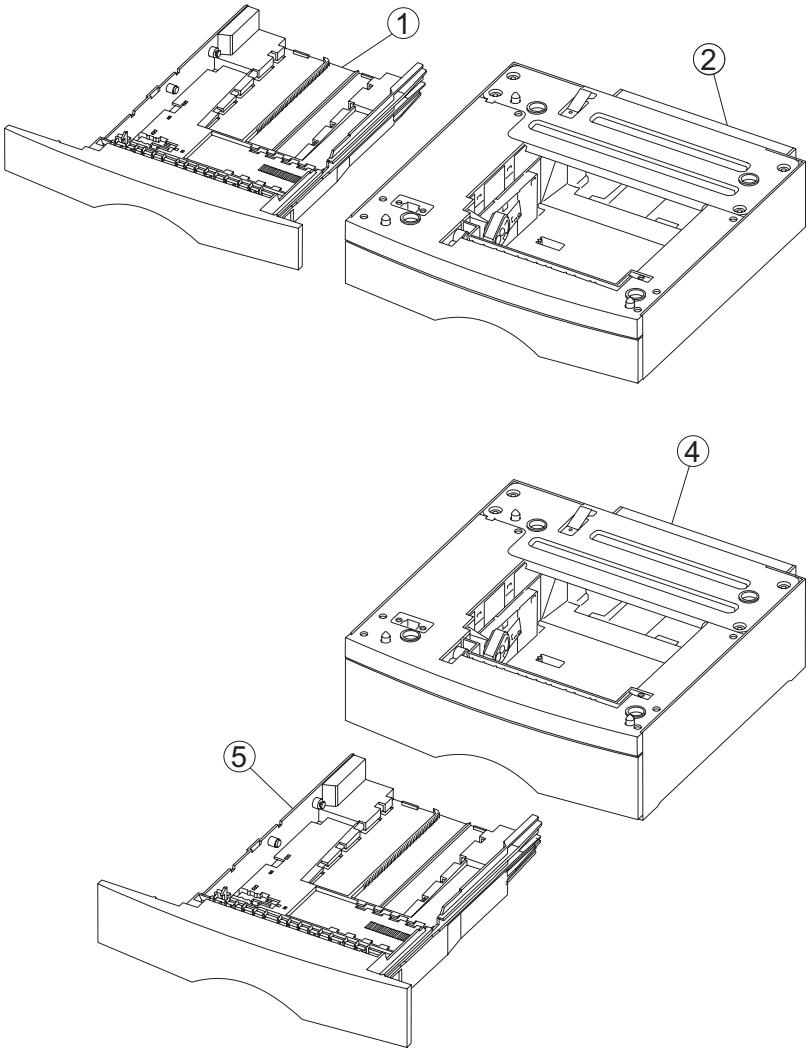

Assembly 9: Options

Asm-Index	Part Numbers	Units	Description
9–1	56P0609	1	Tray, 250–Sheet
2	56P0674	1	Drawer Assembly, 250–Sheet
4	56P0675	1	Drawer Assembly, 500–Sheet
5	56P0678	1	Tray, 500–Sheet
NS	56P0695	1	DIMM, 8MB SDRAM
NS	56P0696	1	DIMM 16MB SDRAM
NS	56P0697	1	DIMM, 32MB SDRAM
NS	56P0698	1	DIMM, 64MB SDRAM
NS	56P0699	1	DIMM, 128MB SDRAM
NS	53P8575	1	DIMM, 2MB Flash
NS	53P8576	1	DIMM, 4MB Flash
NS	53P8577	1	DIMM, 8MB Flash
NS	53P8579	1	DIMM, 16MB Flash
NS	53P8507	1	DIMM, Optra Forms 2MB Flash
NS	53P8508	1	DIMM, Optra Forms 4MB Flash
NS	53P8509	1	DIMM, Optra Forms 8MB Flash
NS	53P8510	1	DIMM, Optra Forms 16MB Flash
NS	75P5698	1	MarkNet™ X2011e Ethernet 10/100 BaseTX
NS	75P5699	1	MarkNet X2012e Ethernet 10/100 BaseTX/10Base2
NS	75P5700	1	MarkNet X2031e Ethernet 10/100 BaseTX
NS	75P5701	1	MarkNet X2030t Token–Ring
NS	53P9085	1	Adapter, External Serial
NS	53P7069	1	Cable, High–Speed Bidirectional Parallel (10 ft)
NS	53P7072	1	Cable, USB 2–Meter
NS	53P7071	1	Cable, Serial (50 ft)
NS	75P5713	1	Kit, Repack
NS	56P2242	1	802.11g Wireless Print Server, external Ethernet to wireless (USA, Canada only)
NS	56P2243	1	802.11g Wireless Print Server, external Ethernet to wireless(All countries except USA and Canada)

Assembly 9: Options

Asm-Index	Part Numbers	Units	Description
NS	56P2744	1	802.11g Wireless Print Server, external USB to wireless (USA, Canada only)
NS	56P2745	1	802.11g Wireless Print Server, external USB to wireless (All countries except USA and Canada)

Index

A

Acronyms 1-14
Adjusting Paper Feed Alignment 4-3
Adjustments 4-2
    paper feed alignment 4-3
    printhead assembly 4-2
Attendance Information Lights 2-5

B

Bracket, Opener Shutter Removal 4-23
Bracket, Paper Detect (Input Sensor) Removal 4-32

C

Cartridge Coupling Assembly Removal 4-46
completely remove top cover 4-9
Configuration Menu Group 3-2
    changing settings 3-3
    moving around the menu 3-2
    printer diagnostics 3-5
    printer setting configuration 3-4
    printing graphical aids 3-3
Connectivity 1-10
Connector Removals - 3-Pin and 2-Pin 4-36
Continuity Check
    HVPS/cartridge 3-7
Cooling Fan Removal 4-56

D

Data Streams 1-7
Diagnostic Information 2-1
Diagnostic Menu Group 3-2
    changing settings 3-3
    graphical aids 3-3
    moving around the menu 3-2
    printer diagnostics 3-5
    printer setting configuration 3-4
Door Latches (Right Side) Removal 4-22
D-Roll (Tray 1) Shaft Assembly Removal 4-34
Duplex Tray Assembly Removal 4-17

E

Entrance Guide Removal 4-30
ESD-Sensitive Parts 4-1

F

Factory Defaults
    restoring 2-59
Flash Memory 1-3
Fonts 1-8
Front Cover Removal 4-5
Fuser Assembly Removal 4-18
Fuser Exit Sensor Removal 4-18
Fuser Lamp Removal 4-18
Fuser Paper Exit Guide Removal 4-18

H

Handling ESD-Sensitive Parts 4-1
HVPS Card Removal 4-54

I

Invalid Code Secondary Lights 2-5

L

Laser Notices 1-vii
Left Guide Removal 4-26
Left Side Cover Removal 4-12
Left Transfer Support Bearing Removal 4-31
Lower (MPF) Housing Assembly - Paper Sensor Removal 4-48
Lower (MPF) Housing Assembly Removal 4-50
Lower Front Cover Removal 4-4
Lubrication Specifications 6-1
LVPS Card Removal 4-55

M

Main Drive Assembly Removal 4-42
Main Drive Motor Assembly Removal 4-40
Maintenance Approach 1-1
Memory 1-3
  flash memory 1-3
Motor Assembly (Stepper) Removal 4-41
MPF Roller Assembly Removal 4-51

O

Operator Panel 1-12
  diagnostics 2-2
  light patterns 2-3
    attendance information 2-5
    service information 2-9
    status information 2-3
  menu definition 3-1
  service checks 2-35

P

Paper Handling 1-8
  options 1-9
Paper Jam Secondary Lights 2-7
Parts Catalog 7-1
  cables 7-10
  charging 7-6
  covers 7-2
  electronics 7-8
  frame 7-16
  fuser 7-18
  how to use 7-1
  multipurpose feeder (MPF) 7-4
  options 7-22
  paper feed 7-14
  sensors 7-20
POST symptom table 2-23
Power-On Operations 2-22
Power-On Self Test (POST) 2-23
Preventive Maintenance 6-1
Print Area 1-5
Print Media 1-6
  operating points 1-6
  textures 1-6
  weights 1-6
Print Quality 1-4
  solving problems 2-52
  using test pages 2-59
Printer Diagnostics Mode 3-6
Printer Error Secondary Lights 2-8
Printer Features 1-3
  connectivity 1-10
  data streams 1-7
  fonts 1-8
  media 1-6
    operating points 1-6
    textures 1-6
    weights 1-6
  memory 1-3
  operator panel 1-12
  paper handling 1-8
  print area 1-5
  print quality 1-4
  resolution 1-4
  RIP card specifications 1-11
  speed 1-11
  supplies 1-12
  user flash memory 1-3
Printer Identification 1-2
Printer Speed 1-11
Printer symptom table 2-24
Printhead Assembly Adjustment 4-2

R

Rear Cover Removal 4-14
Rear Exit Door Removal 4-16
Reference Plate Assembly Removal 4-44
Removals 4-4
  bracket, opener shutter 4-23
  bracket, paper detect 4-32
  card
    HVPS 4-54
    LVPS 4-55
    RIP card 4-39
    RIP card and cage 4-38
  cartridge coupling assembly 4-46

charge roll 4-25
connectors
2-pin 4-36
3-pin 4-36
cooling fan 4-56
cover
front 4-5
left side 4-12
lower front 4-4
MPF 4-4
rear 4-14
right side 4-10
top 4-9
top cover assembly 4-6
door latches (right side) 4-22
D-roll
tray 1 feed 4-33
tray 1 shaft assembly 4-34
duplex tray assembly 4-17
fuser assembly 4-18
fuser exit sensor 4-18
fuser lamp 4-18
fuser paper exit guide 4-18
guide
entrance 4-30
left 4-26
right 4-26
locations
high voltage power supply (HVPS) 5-12
power supply (LVPS) 5-11
RIP card assembly 5-8
lower MPF assembly 4-50
main drive assembly 4-42
motors
main drive assembly 4-40
stepper 4-41
MPF roller assembly 4-51
printhead 4-37
rear exit door 4-16
reference plate assembly 4-44
roller stopper 4-24
sensor
MPF - paper sensor 4-48
smart button 4-29
terminal assembly 4-20
transfer roll assembly
left transfer bearing 4-31
tray damper 4-21
spring 4-21
upper MPF assembly 4-47
Resolution 1-4
Right Guide Removal 4-26
Right Side Cover Removal 4-10, 4-11
RIP Card Assembly Removal 4-39
RIP Card Cage Removal 4-38
RIP Card Specifications 1-11
Roll Tray 1 Feed Removal 4-33
Roller Stopper Removal 4-24

S

Safety Information 1-xvii
Safety Inspection Guide 6-1
Serial Number 1-2
Service Checks
cooling fan 2-26
cover interlock switch 2-27
dead machine 2-30
fuser 2-31
cold fuser 2-32
hot fuser 2-34
LVPS power supply 2-30
main motor 2-34
operator panel 2-35
paper feed 2-38, 2-39, 2-40, 2-41, 2-42, 2-43
parallel port 2-44
print quality 2-45
bands 2-51
black lines 2-51
black page 2-47
heavy background 2-48
light print 2-50
partial blank image 2-49
poor fusing of image 2-50
toner on back of page 2-51
variation 2-49
white lines 2-51
white spots 2-49
RIP card 2-28
transfer roll 2-37

Service Error Codes 2-11
engine software error 2-12
fuser error 2-13
network error 2-20
NVRAM failure 2-17
paper communication failure 2-21
printhead error 2-15
RAM memory error 2-19
RIP card error 2-18
RIP software error 2-11
RIP software/illegal trap 2-11
toner sensor error 2-14
transfer roll error 2-12
transport motor error 2-16
Service Error Secondary Lights 2-10
Service Information Light Patterns 2-9
Smart Button Sensor Removal 4-29
Special Tools 1-1
Status Information Light Patterns 2-3
Supplies 1-12
Symptom Tables 2-23
POST 2-23
printer 2-24

T

Terminal Assembly Removal 4-20
Top Cover Assembly Removal 4-6
Transfer Roll Assembly Removal 4-31
Tray Damper and Spring Removal 4-21

U

Upper (MPF) Housing Assembly Removal 4-47

Part Numbers

1339520 7-13
1339528 7-13
1339529 7-13
1339530 7-13
1339531 7-13
1339532 7-13
1339533 7-13
1339534 7-13
53P7069 7-23
53P7070 7-23
53P7071 7-23
53P7072 7-23
53P7103 7-13
53P7104 7-13
53P7600 7-13
53P7923 7-13
53P7929 7-23
53P7930 7-23
53P7931 7-23
53P7932 7-23
53P8507 7-23
53P8508 7-23
53P8509 7-23
53P8510 7-23
53P8575 7-23
53P8576 7-23
53P8577 7-23
53P8579 7-23
53P8823 7-23
56P0600 7-3
56P0601 5-3, 7-3, 7-11
56P0602 5-3
56P0603 7-3
56P0604 7-3
56P0605 7-3
56P0606 7-17
56P0607 7-3
56P0608 7-3
56P0609 7-17, 7-23
56P0610 7-3
56P0611 7-5
56P0612 7-5
56P0613 7-5
56P0614 7-5
56P0615 7-5
56P0616 7-11
56P1030 7-9, 7-11
56P0618 7-15
56P1031 7-9, 7-11
56P0620 7-11
56P0621 7-11
56P0622 7-9
56P0623 7-17
56P0624 7-11
56P0625 7-11
56P0626 7-9
56P0627 7-9

56P0628 7-9
56P0629 7-17
56P0630 7-9
56P0631 7-11
56P0632 7-15
56P0633 7-15
56P0634 7-15
56P0635 7-15
56P0636 7-15
56P0637 7-15
56P0638 7-15
56P0639 7-15
56P0640 7-7
56P0641 7-7, 7-9
56P0642 7-7
56P0643 7-7
56P0644 7-7
56P0645 7-11, 7-15, 7-21
56P0646 7-19
56P0647 7-19
56P0648 7-19
56P0649 7-11
56P0650 7-9
56P0651 7-15
56P0652 7-11, 7-21
56P0653 7-11, 7-21
56P0654 7-15
56P0655 7-15, 7-21
56P0656 7-15
56P0657 7-15
56P0658 7-17
56P0659 7-17
56P0660 7-17
56P0661 7-17
56P0662 7-17
56P0663 7-9
56P0664 7-11
56P0665 7-11
56P0666 7-11
56P0667 7-17
56P0668 7-7, 7-17
56P0669 7-7
56P0670 7-24
56P0671 7-19
56P0672 7-17
56P0673 7-19
56P0674 7-23
56P0675 7-23
56P0676 7-19
56P0677 7-15
56P0678 7-23
56P0679 7-3
56P0680 7-3
56P0681 7-23
56P0682 7-11
56P0695 7-23
56P0696 7-23
56P0697 7-23
56P0698 7-23
56P0699 7-23
53P7933 7-23
53P7934 7-23