

Model 337

Soft Serve Freezer

Service Manual





044869-S

8/21/00

Table of Contents

Section 1: Introduction 1

Safety 2

Refrigerant 2

337 Specifications 3

Running Specifications 4

Installation Instructions 5

Section 2: Controls and Systems 7

Operating Screen Displays 8

Pulse Width Modulation 13

Refrigeration System 15

PWM Split Flow Chart 16

Universal & Interface Boards 17

Control Overview 18

Section 3: Troubleshooting 19

General Troubleshooting Guide 20

Electrical Troubleshooting 23

Control Faults 24

Section 4: Parts 25

Warranty Explanation 26

337 Exploded View 28

337 Panels 30

Beater Door Assembly 32

Draw Switch Assembly X38547 33

Control Assembly X45055 34

Plate A.-Decorative X44275 35

Control Assembly X48482- 36

Valve A.-Expansion X45051 37

Parts List 38

Wiring Diagrams 44

CAUTION: Information in this manual is intended to be used by Taylor Authorized Service Technicians only.

Note: Continuing research results in steady improvements; therefore, information in this manual is subject to change without notice.

© September, 2000 Taylor
All rights reserved.
044869-S

TAYLOR®

The word Taylor and the Crown design are registered trademarks in the United States of America and certain other countries.

Taylor
a division of Carrier Commercial Refrigeration, Inc.
750 N. Blackhawk Blvd.
Rockton, IL 61072

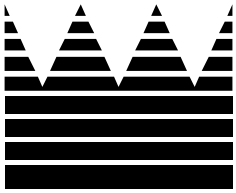

Section 1: Introduction

- **Safety**
- **Refrigeration**
- **Specifications**
- **Installation Instructions**

Safety

We at Taylor are committed to manufacturing safe operating and serviceable equipment. The many built-in safety features that are part of all Taylor equipment are aimed at protecting operators and trained service technicians alike.

This manual is intended exclusively for Taylor authorized service personnel.

 **DO NOT** attempt any repairs unless the main power supply to the machine has been disconnected. Failure to follow this instruction may result in electrocution.

 Stationary appliances which are not equipped with a power cord and a plug or other device to disconnect the appliance from the power source must have an all-pole disconnecting device with a contact gap of at least 3 mm installed in the external installation. Failure to follow this instruction may result in electrocution.

 **DO NOT** install the unit in an area where a water jet could be used to clean or rinse the freezer. Failure to follow this instruction may result in serious electrical shock.

 These machines must be placed on a level surface. Failure to comply may result in personal injury or equipment damage.

This freezer is designed to operate indoors, under normal ambient temperatures of 70°-75°F (21°-24°C). The freezer has successfully performed in high ambient temperatures of 104°F (40°C) at reduced capacities.

NOISE LEVEL: Airborne noise emission does not exceed 78 dB(A) when measured at a distance of 1.0 meter from the surface of the machine and at a height of 1.6 meters from the floor.

Refrigerant

Taylor uses R404A refrigerant. This refrigerant is generally considered non-toxic and non-flammable; however, any gas under pressure is potentially hazardous.

 NEVER fill any refrigerant cylinder completely with liquid. Filling the cylinder to approximately 80% will allow for normal expansion.

 Refrigerant liquid sprayed onto the skin may cause serious damage to tissue. Keep eyes and skin protected. If refrigerant burns should occur, flush immediately with cold water. If burns are severe, apply ice packs and contact a physician immediately.

 Taylor reminds technicians to be cautious of government laws regarding refrigerant recovery, recycling, and reclaiming systems. If you have any questions regarding these laws, please contact the factory Service Department.

WARNING: R404A refrigerant used in conjunction with polyolester oils is extremely moisture absorbent. When opening a refrigeration system, the maximum time the system is open must not exceed 15 minutes. Cap all open tubing to prevent humid air or water from being absorbed by the oil.

 If the crossed out wheeled bin symbol is affixed to this product, it signifies that this product is compliant with the EU Directive as well as other similar legislation in effect after August 13, 2005. Therefore, it must be collected separately after its use is completed, and cannot be disposed as unsorted municipal waste.

The user is responsible for returning the product to the appropriate collection facility, as specified by your local code.

For additional information regarding applicable local laws, please contact the municipal facility and/or local distributor.

337 Specifications

Freezing Cylinder

Two, 2.8 quart (2.7 liter).

Mix Hopper

Two, 14 quart (13.2 liter).

Beater Motor

Two, 1.0 HP.

Refrigeration Unit

One, 9,500 BTU/hr. R404A.
Separate Hopper Refrigeration (SHR), One, 400 BTU/hr. R134a. (BTU's may vary depending on compressor used.)

Electrical

Electrical	One dedicated connection.	
	Max. Fuse Size	Min. Circuit Ampacity
208-230/60/1 Air	35	25
208-230/60/1 Water	35	25
208-230/60/3 Air	25	18
208-230/60/3 Water	25	17
220-240/50/1 Air	30	22
220-240/380-415/50/3 Air	12	9

For exact electrical information, always refer to the data label of the unit.

Air Cooled

Minimum 6" (152 mm) on both sides. Install the skirt provided on the right side of the unit and place the back of the unit against a wall to prevent recirculation of warm air.

Water Cooled

Water inlet and drain connections under the side of the base 3/8 FPT.

Dimensions

Width: 20-7/16" (519 mm)
Depth: 31-3/16" (792 mm)
Height: 38-3/4" (984 mm)
Counter Clearance: 4" (101 mm) mounted on standard legs.

Approximate Weights

Net: 446 lbs. (202.3 kgs)
Crated: 506 lbs. (229.5 kgs)
Volume: 29.1 cu. ft. (.81 cu. m.)

This unit is designed and constructed to meet stringent safety and sanitation requirements for NSF and other food service regulatory agencies.

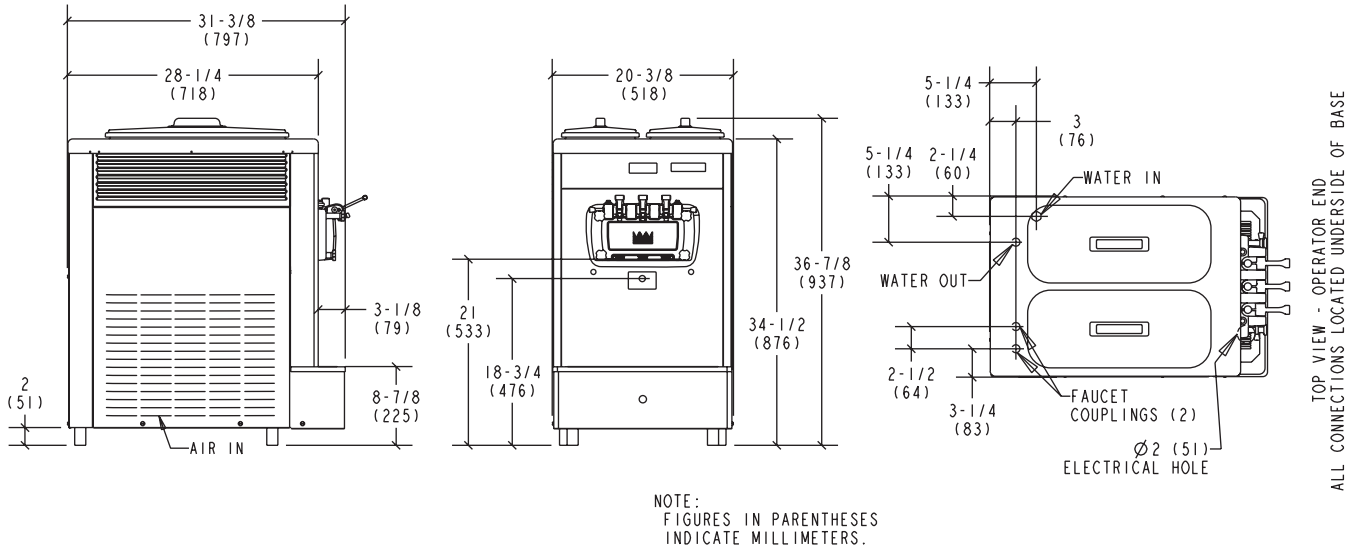

Figure 1

Running Specifications

The following are the pressure and temperature settings recommended by Taylor and apply to all models covered in this manual.

PWM (Pulse Width Module) Valve

Pressure setting: HP62 = 20 to 22 PSI (138 to152 kPa)

Normal product temperature should range between 18°F to 20°F (-7.8°C to -6.7°C).

Mix hopper and standby temperature should range between 38°F to 40°F (3.3°C to 4.4°C).

High Side

Head pressure on air cooled units varies depending on ambient temperatures.

Air Cooled: The following chart indicates normal operating head pressures at various ambient temperatures.

Ambient Temperature		Normal Operating Head Pressures
F.	C.	PSI
70°	21.1°	240 - 270 (1,655 - 1,862 kPa)
80°	26.7°	270 - 300 (1,862 - 2,069 kPa)
90°	32.2°	300 - 340 (2,069 - 2,344 kPa)
100°	37.8°	340 - 380 (2,344 - 2,620 kPa)

Note: This chart applies to units using HP62 (404A) refrigerant.

Installation Instructions

Air Cooled Units

Air cooled units require a minimum 6” (152 mm) on both sides. Install the skirt provided on the right side of the unit and place the back of the unit against a wall to prevent recirculation of warm air. Failure to allow for adequate clearance can reduce the refrigeration capacity of the freezer and possible cause damage to the compressor.

Disconnect Switch

If the unit has no plug, a separate disconnect switch must be installed, or another alternate means to disconnect power must be implemented. Failure to follow this instruction may result in electrocution.

Water Cooled Units

An adequate cold water supply with a hand shut-off should be provided.

IMPORTANT: Do not install a shut–off valve on the drain line.

Refrigeration

Main Compressor:

Air Cooled Units – 46 oz. of R404a (HP62) .
Water Cooled Units – 38 oz. of R404a (HP62).

Separate Hopper Refrigeration:

The EPR valve setting for the SHR refrigeration system should be 20–22 PSI.

Air Cooled Units – 6 oz. of 134a refrigerant.

Note: Refrigerant charges are subject to change. Always refer to the freezer data plate.

Beater Rotation

Beater rotation must be clockwise as viewed looking into the freezing cylinder.

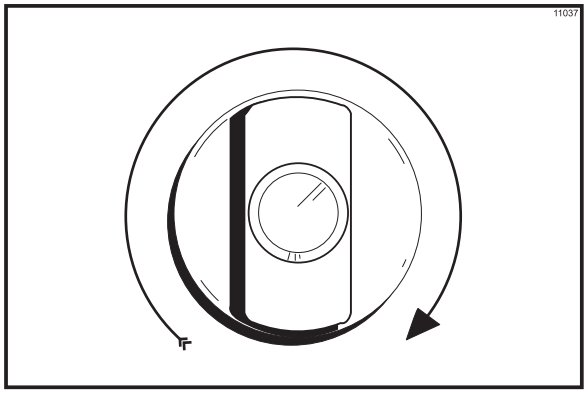

Figure 2

To correct rotation on a three–phase unit, interchange any two incoming power supply lines at freezer main terminal block only.

To correct rotation on a single–phase unit, exchange leads inside the beater motor. (Follow the diagram printed on the motor.)

Electrical connections are made directly to the terminal block provided on the bottom of the frame.

REMEMBER TO DISCONNECT ALL POWER TO THE FREEZER! Failure to follow this instruction may result in electrocution

Electrical Connections



CAUTION: THIS EQUIPMENT MUST BE PROPERLY GROUNDED! FAILURE TO DO SO CAN RESULT IN SEVERE PERSONAL INJURY FROM ELECTRICAL SHOCK!

Each freezer requires one dedicated power supply. Check the data label on the freezer for fuse, circuit ampacity and electrical specifications. Refer to the wiring diagram, provided inside the control box, for proper power connections.

In the United States, this equipment is intended to be installed in accordance with the National Electrical Code (NEC), ANSI/NFPA 70–1987. The purpose of the NEC code is the practical safeguarding of persons and property from hazards arising from the use of electricity.

This code contains provisions considered necessary for safety. Compliance therewith and proper maintenance will result in an installation essentially free from hazard!

In all other areas of the world, equipment should be installed in accordance with the existing local codes. Please contact your local authorities.

Stationary appliances which are not equipped with a power cord and a plug or other device to disconnect the appliance from the power source must have an all–pole disconnecting device with a contact gap of at least 3 mm installed in the external installation.

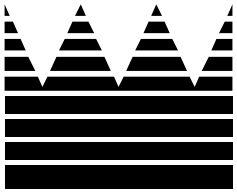

Section 2: Controls and Systems

- **Operating and Service Screen Displays**
- **Pulse Width Modulation**
- **Refrigeration System**
- **PWM Split Flow Chart**
- **Universal and Interface Boards**
- **Control Overview**

Operating Screen Displays

The **POWER SWITCH OFF** screen indicates that the power switch is in the **OFF** position.

```
POWER SWITCH OFF

=-=-=-=-=-=-=-=-=-=
```

The normal operating screen will display the current mode of operation and the level of mix in each mix hopper. (The power switch is in the **ON** position.)

```
MODE: OFF

MIX:          L = OK          R = OK
```

Operator Menu

The Operator Menu allows the operator to access operational information and to set non-critical functional parameters. The Operator Menu also allows access to the Service Menu. (Note: Only service technicians who know the access code may use the Service Menu.)

Operator Options

A Exit From Menu
B Fault Description
C System Information
D Current Conditions
E Service Menu

Pressing the OFF (<--) key will move the cursor one position to the left. Pressing the STBY (-->) key will move the cursor one position to the right. Both keys include the “wraparound” feature. This means that when the cursor reaches the end of the option, any further movement in the same direction causes the cursor to “wraparound” (to be placed at the opposite end of the option listing).

As the cursor is moved under each menu option, the third line of the display shows a description of that menu option. Pressing the MENU/SEL key selects the menu option displayed.

```
OPERATOR MENU
A B C D E
EXIT FROM MENU
<- - - - - ->                SEL
```

Fault Description (Option B)

This option lists any faults detected by the control and allows the operator to clear them from the system. When a fault is detected it will be displayed on the second line of the LCD. Pressing the MENU/SEL key will display the next fault found or return the display to the Operator Menu if no additional faults exist. If the OFF key is pressed when a fault is displayed, all faults that have been corrected will be cleared from the LCD upon returning to the Operator Menu. To return to the Operator Menu, press the MENU/SEL key.

Note: A “beeping” tone will sound to alert the operator of a fault. To discontinue the tone, access the Operator Menu and enter Option B. Correct the fault, then press the OFF (<--) key, and the tone will stop.

```
FAULT DESCRIPTION
NO FAULT FOUND

CLR                          SEL
```

Possible Fault Descriptions

NO FAULT FOUND – No fault is found.

BTR OVLD OR HPCO – The beater motor has gone off on overload or the compressor has reached its high pressure cut–out point.

COMP ON TOO LONG – The compressor has been running more than 11 minutes.

BEATER OVER CURRENT – The beater motor will not run due to high current.

FUSE/MTR/COMP/PWM – The fault is caused by either the fuse, motor, compressor or PWM valve.

HOPPER THERM BAD – The hopper thermistor probe is faulty.

LEFT BRL THERM BAD – The left freezing cylinder thermistor probe is faulty.

RIGHT BRL THERM BAD – The right freezing cylinder thermistor probe is faulty.

HOPPER OVER TEMP – The hopper temperature has exceeded 41°F. (5°C.).

BARREL OVER TEMP – The freezing cylinder temperature has exceeded 41°F. (5°C.).

POWER FAILURE – There has been a power failure.

System Information (Option C)

This screen displays two screens. The first screen displays the version of software the machine is using.

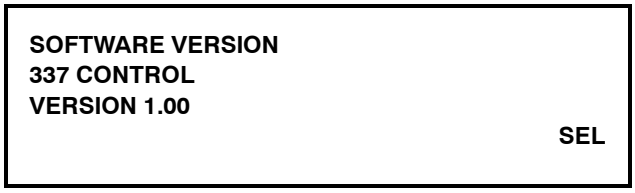

Pressing the MENU/SEL key a second time will display the B.O.M. and the serial number, which is programmable in the Service Menu under option J (Edit Unit I.D.).

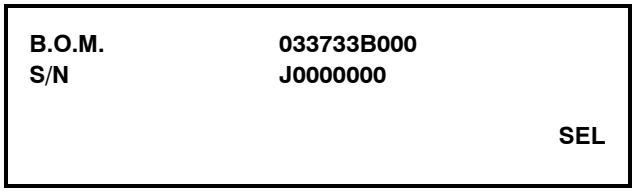

To return to the Operator Menu, press the MENU/SEL key.

Current Conditions (Option D)

This screen indicates the current viscosity, hopper and barrel temperatures.

This screen also displays the number of draws that have been made from each freezing cylinder. (If a product is drawn from the center door spout, one draw is added to both the right and left draw count.) When the unit is taken out of the AUTO mode, the number of draws will reset to zero.

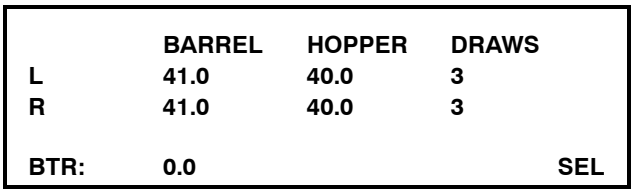

Press the MENU/SEL key once to return to the Operator Menu.

Service Menu Access (Option E)

Enter the Service Access Code (8333) to obtain menu options for servicing the equipment. The OFF (<--) and STBY (-->) keys will move the cursor left or right respectively with wraparound. Pressing the WASH (+ + +) or AUTO (– – –) keys increase or decrease respectively, with rollover, the selected code digit. When the correct access code has been entered, press the MENU/SEL key to display the Service Menu. Pressing the MENU/SEL key with an invalid access code returns the display to the Operator Menu.

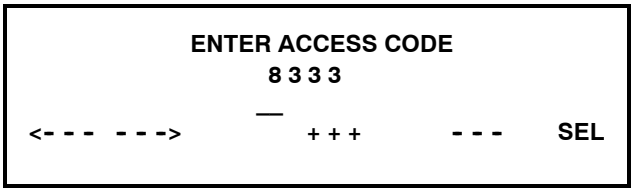

Service Menu

The Service Menu option allows a trained service technician to access and modify critical operating parameters for the machine.

```
                SERVICE MENU
              A B C D E F G H I J
              EXIT TO OP. MENU
<- - - - - ->                                SEL
```

The Service Menu options are listed in the table below:

A	Exit to Op. Menu
B	Temperature Scale
C	Viscosity Setting
D	Standby Temp.
E	Hopper Temp.
F	Compressor Cycle Time
G	Beater Off Delay
H	Compressor On Delay
I	PWM Duty Cycle
J	Edit Unit ID

Temperature Scale (Option B)

This option allows the service technician to choose the scale in which the machine will display all temperatures. To select the Centigrade scale, press the STBY (-->) key to move the cursor under the letter "C" on the LCD. To select the Fahrenheit scale, press the OFF (<--) key to move the cursor under the letter "F".

```
TEMPERATURE SCALE
TEMP IN                                F OR C
                                      – – –
<- - - - - ->                                SEL
```

Pressing the MENU/SEL key accepts the selected scale and returns the LCD to the Service Menu.

Viscosity Setting (Option C)

The viscosity setting option allows the service technician to adjust the viscosity at which the compressor is deactivated during the AUTO mode of operation.

Pressing the WASH (+++) or AUTO (– – –) keys will increase or decrease the viscosity setting 0.1 amps respectively. While the beater motor is on, the displayed Present Viscosity is updated continually. When the beater motor is off, this value is zero.

Note: The term "amp.", used here for viscosity measurement, is not the same as the term "amp." as would be measured by an ammeter.

Note: The barrel temperature must be raised > 25°F to lower the amp draw.

Before setting viscosity, the unit must be sanitized, primed, and placed in the AUTO mode. As the product is freezing, monitor the amp draw of the beater motor. After a few minutes of freezer operation, begin taking product samples. When the product reaches serving appearance, note the amp draw of the beater motor. Set Screen C to reflect the amp draw that was witnessed when servable product was achieved.

```
VISCOSITY SETTING
AMPS        = 5.0 AMPS
PRESENT     = 0.0
                    + + +        - - -      SEL
```

Pressing the MENU/SEL key will accept the viscosity and return to the Service Menu.

Set Standby Temperature (Option D)

This option allows the technician to adjust the barrel temperature at which the compressor will turn on in the Standby Mode. The factory default setting is 30°F (–1°C). The minimum setting is 28°F (–2°C) and the maximum setting is 41°F (5°C). The differential between cycle off and cycle on is 2°F. Pressing the WASH (+ + +) KEY and the AUTO (– – –) key increase and decrease the temperature by 1° respectively.

The SET STANDBY TEMPERATURE screen displays the current temperatures of both freezing cylinders.

```
SET STANDBY TEMP
STANDBY TEMP:     30.0
PRESENT :         30.0
                  + + +      - - -     SEL
```

Pressing the MENU/SEL key accepts the setting and returns to the Service Menu.

Set Hopper Temperature (Option E)

The exit temperature of the hopper cooling system refrigerant can be adjusted through this screen.

The current temperature is also displayed. The factory default setting is 40°F (4°C). The minimum setting is 30°F (–1°C) and the maximum setting is 40°F (4°C). Pressing the WASH (+ + +) or AUTO (– – –) keys increase or decrease the temperature by 1/2°respectively. The differential between cycle off and cycle on is 12°F (6°C).

```
SET HOPPER TEMP
HOPPER TEMP:      39.0
PRESENT :         38.0
                  + + +      - - -     SEL
```

Pressing the MENU/SEL key accepts the setting and returns to the Service Menu.

Compressor Cycle Time (Option F)

This setting determines the length of time the compressor will remain off after a freeze cycle is complete. The numbers represent minutes and can be adjusted for a minimum of three minutes to a maximum of 16 minutes. The factory default setting is 10 minutes. The compressor cycle time can be increased or decreased by increments of one minute. The compressor OFF cycle time should not allow the OFF cycle temperature to rise more than 2°.

```
COMP CYCLE TIME
CYCLE TIME: 10 MIN
                  + + +      - - -     SEL
```

Pressing the MENU/SEL key accepts the setting and returns to the Service Menu.

Beater Off Delay (Option G)

This setting will allow the beater motor to continue running after the compressor has cycled off. The factory default setting is zero; however, the beater motor can be adjusted to run after the compressor cycles off. The minimum setting is 0 and the maximum setting is 10. The beater off delay can be increased or decreased by increments of 1 second.

```
BEATER OFF DELAY
TIME: 0 SECONDS
                  + + +      - - -     SEL
```

Pressing the MENU/SEL key accepts the setting and returns to the Service Menu.

Compressor On Delay (Option H)

This setting will allow the beater motor to start before the compressor activates. Standard operation allows the beater motor and compressor to start simultaneously; therefore, the factory default setting is zero. However, the compressor delay can be adjusted so the compressor is activated after the beater motor starts.

The minimum setting is 0 and the maximum setting is 10. The compressor on delay can be increased or decreased by increments of 1 second.

```
COMP ON DELAY
TIME: 0 SECONDS
                  + + +      - - -     SEL
```

Pressing the MENU/SEL key accepts the setting and returns to the Service Menu.

PWM Duty Cycle (Option I)

The PWM (Pulse Width Modulation) DUTY CYCLE setting controls the length of time the refrigerant will flow through each barrel (freezing cylinder).

```
PWM DUTY CYCLE
DUTY CYCLE: 80%

                    + + +      - - -     SEL
```

The PWM duty cycle can be adjusted to a setting between 30% – 90%. The number chosen will be the percentage of time refrigerant can flow per individual seconds of compressor operation.

The factory default setting is 80% and can be increased or decreased by increments of 10% by using the arrow keys. This allows refrigerant to flow 80% of a one second period. Pulling only the left draw handle will allow 70% of the refrigerant to flow through the left freezing cylinder and 10% through the right freezing cylinder. Pulling only the right draw handle will allow 70% of the refrigerant to flow through the right freezing cylinder and 10% through the left freezing cylinder. By pulling the center draw handle, the refrigerant flow will be divided equally (40% refrigerant flow through the left freezing cylinder and 40% through the right freezing cylinder).

Press the MENU/SEL key. This screen is used to set the low percent for the PWM duty cycle. The factory default setting is 10 and can be increased or decreased by increments of 5%. The minimum setting is 5 and the maximum setting is 15. If the low percent is set at 5 and the duty cycle is set at 80, the freezing cylinder being used will have 75% refrigerant flow and the cylinder not being used will have 5% refrigerant flow when the draw handle is pulled.

```
PWM DUTY CYCLE
MIN DUTY CYCLE: 10%

                    + + +      - - -     SEL
```

Pressing the MENU/SEL key accepts the setting and returns to the Service Menu.

Edit Unit ID (Option J)

This option allows the technician to enter the factory Bill of Materials code used to assemble the machine, and the freezer serial number. The freezer B.O.M. screen is displayed upon selecting this option.

```
ENTER FREEZER BOM
0 3 3 7 2 7 B 0 0 0
_
<- - - - - ->          + + +    - - -          SEL
```

Pressing the OFF (<--) or STBY (-->) keys will move the cursor left or right respectively with wraparound. When the correct freezer B.O.M. has been entered, pressing the MENU/SEL key displays the freezer serial number.

```
ENTER FREEZER SN
J 0 0 0 0 0 0 0
_
<- - - - - ->          + + +    - - -          SEL
```

Pressing the OFF (<--) or STBY (-->) keys will move the cursor left or right respectively with wraparound. Pressing the WASH (+ + +) or AUTO (– – –) keys increase or decrease respectively, with rollover, the selected character. When the correct freezer serial number has been entered, pressing the MENU/SEL key returns to the Service Menu.

Pulse Width Modulation

The central feature of the Model 337 is the precise control of the refrigerant flow. The flow of the refrigerant is distributed between the freezing cylinders on the basis of cylinder cooling load. This precise control is achieved by using Pulse Width Modulated (PWM) valves as the refrigerant control devices.

The universal control regulates the amount of time each PWM valve is open, thereby controlling the amount of refrigerant that flows through each freezing cylinder. Taylor uses the term “split” to refer to the amount of time each PWM valve is open in relation to the amount of time the other PWM valve is open.

There are three types of splits: high, low, and even.

For example, if the left PWM valve is described as operating at the HIGH split, it is passing more refrigerant (open longer) than the right PWM valve. In this case, the right PWM valve is operating at the LOW split. If the left PWM valve is described as operating at the EVEN split, it is passing as much refrigerant (open for the same amount of time) as the right PWM valve.

Note: Whenever the refrigeration system is active, both PWM valves are active.

The valve of the PWM duty cycle low percent is the equivalent of the low split. The valve of the PWM high split is determined by subtracting the PWM duty cycle low percent from the PWM duty cycle. When an even split occurs, the value of the PWM duty cycle is evenly divided between the freezing cylinders.

PWM Valve Split During Freeze Down

When the AUTO mode is selected, the refrigeration system is activated and the PWM valve split is determined by the temperature of the freezing cylinders and the difference between the freezing cylinder temperatures at the time the AUTO mode was selected. (See Figure 3 on page 14.)

Example 1

If only the left freezing cylinder temperature is below 25°F(–4°C), and the difference between the right and left freezing cylinder temperatures is more than 10°, the left PWM valve operates at the low split and the right PWM valve operates at the high split. (If the difference between the left and right freezing cylinder temperatures is less than 10°, the left and right PWM valves will operate at an even split.)

Example 2

If only the right freezing cylinder is below 25°F (–4°C) and the difference between the right and left freezing cylinder temperatures is more than 10°, the right PWM valve operates at the low split and the left PWM valve operates at the high split. (If the difference between the right and left freezing cylinder temperatures is less than 10°, the left and right PWM valves will operate at an even split.)

Example 3

If both freezing cylinders are at or above 25°F (–4°C) or both freezing cylinders are below 25°F (–4°C), the right and left PWM valves operate at an even split.

If, during the AUTO mode one barrel temperature is more than 10°F (12°C) above the other barrel temperature, the valve for the warmer barrel will be modulated at the high split, and the valve for the colder barrel will be modulated at the low split.

PWM Valve Split During Draw								
Case	Present Draw From			Refrigeration System Operating Because of Last Draw From			Left PWM	Right PWM
	L	C	R	L	C	R		
1	ND	ND	ND	0	0	0	0	0
2	ND	ND	D	0	0	0	L	H
3	ND	ND	D	0	0	1	L	H
4	ND	ND	D	0	1	0	L	H
5	ND	ND	D	1	0	0	L	H
6	ND	D	ND	0	0	0	E	E
7	ND	D	ND	0	0	1	E	E
8	ND	D	ND	0	1	0	E	E
9	ND	D	ND	1	0	0	E	E
10	D	ND	ND	0	0	0	H	L
11	D	ND	ND	0	0	1	H	L
12	D	ND	ND	0	1	0	H	L
13	D	ND	ND	1	0	0	H	L

Figure 3

PWM Valve Split During Draw

The refrigeration system is activated when either one or both of the draw switches are closed. The PWM valve split depends on the side that it is drawn from. The PWM valve split is not dependent upon the PWM split that may already be active at the time the draw is made (i.e., the split is set to match each draw). See Figure 3.

Example 1

Drawing from the center door spout will cause an even split.

Example 2

Drawing from one side will cause a high/low split. The high split stays with the drawn side.

Legend for Figure 3

The first column (CASE) identifies each of the thirteen draw cases.

The next three columns (L C R) identify from which side the product is being drawn.

ND = No draw is being made.

D = Draw is being made.

The next three columns (also L C R) identify whether the refrigeration system is operating because of a previous draw (and from which side the previous draw was made) at the time the present draw is being made.

0 = The refrigeration system is not operating at the time the present draw was made.

1 = The refrigeration system is operating at the time the present draw was made.

The last two columns (LEFT PWM/RIGHT PWM) identify the resulting PWM operation.

0 = OFF (no PWM operation)

L = Low split.

H = High split.

E = Even split.

PWM Valve Split Caused By Compressor Cycle Timer

The last split condition that is possible in the AUTO mode is when the system is started by the compressor cycle timer. In this instance, the split is even.

Note: In the STANDBY mode, the PWM valve split is always even.

Refrigeration System

The criteria used to cycle off the refrigeration in the Model 337 are different from those used in other Taylor equipment. System cycle off depends on both product viscosity and product temperature. For system cycle off to occur, the following conditions have to be met:

1. The product viscosity must be greater than the viscosity set point.
2. The freezing cylinder temperatures must be at or below the balance temperatures.
3. Both draw switches must be open (draw valves closed).

If any of the above conditions are not met, the system will continue to run until they are met.

The balance temperature is a set point that is automatically set by the control at the first viscosity cycle off (after the AUTO mode is activated). A balance temperature is calculated for each freezing cylinder.

The calculation of the balance temperatures depends also on the temperature of the cylinders at the time that the freezer is placed in the AUTO mode. If the cylinder temperature is greater than 25°F (–4°C) or less than 10°F (–12°C), the balance temperature is equal to the freezing cylinder temperature at first cycle off minus 1°. If the cylinder temperature, at the time the freezer is placed in the AUTO mode, is between 25°F (–4°C) and 10°F (–12°C), the balance temperature is equal to the previous balance temperature.

To control the split during some draw recovery cases, the relationship between the cylinder temperature and its balance temperature is used in conjunction with the viscosity information. During a draw recovery, if the PWM valves are operating with an even split, the viscosity condition is met, but one of the cylinders is above its balance temperature, the PWM split will change. The cylinder that is above its balance temperature will be favored with the high split.

PWM Split Flow Chart

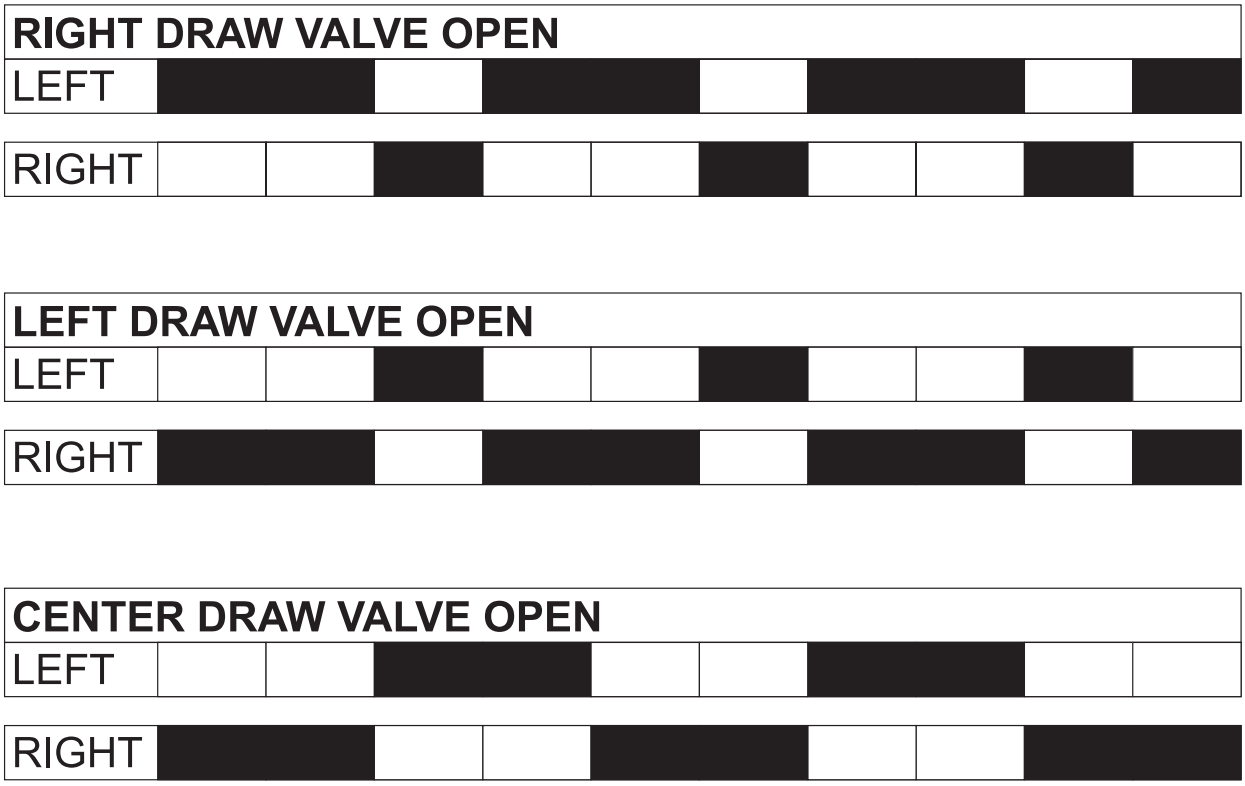

Figure 4

PWM Settings	Corresponding Suction Pressure at 70°F (21°C) Ambient Temperature
90%	24 - 15
80%	22 -13
70%	20 -11
60%	18 - 8
50%	16 - 6
40%	14 - 4
30%	12 - 2

Universal & Interface Boards

External Connections

J2

P4	Left Mix Out Probe
P2	Right Mix Out Probe
P3	Left Mix Low Probe
P1	Right Mix Low Probe

J4

P6	Compressor Contactor Coil
P5	Beater Motor Contactor Coil
P4	Left PWM Valve
P3	Right PWM Valve
P1	Hopper Refrigeration
P2	Condenser Fan

J6

P3	Power Switch
P7	Security Switch
P1	Left Draw Switch
P5	Right Draw Switch

J10

P6	Hopper Thermistor Probe
P4	Right Barrel Thermistor
P5	Left Barrel Thermistor

Internal Connections

J7 *(Interface Board – 50 pin connector)*

Primary communication between the Universal and Interface boards. Signals from the following devices are sent via this connection.

Inputs:
- Beater Overload
- Right Mix Low
- Left Mix Low
- Right Mix Out
- Left Mix Out
- Security Switch
- Power Switch Detect
- Right Draw Switch
- Left Draw Switch

J7 *(Interface Board – 50 pin connector)*

Outputs:
- Right PWM Solenoid
- Left PWM Solenoid
- Beater Motor
- Main Compressor
- Condenser Fan
- Hopper Compressor

J9 Signals from the following devices are sent via this connection.
- Hopper Thermistor Probe
- Right Barrel Thermistor
- Left Barrel Thermistor

For a description illustration of these boards and their connections, see the "Control Overview" section in this manual.

Control Overview

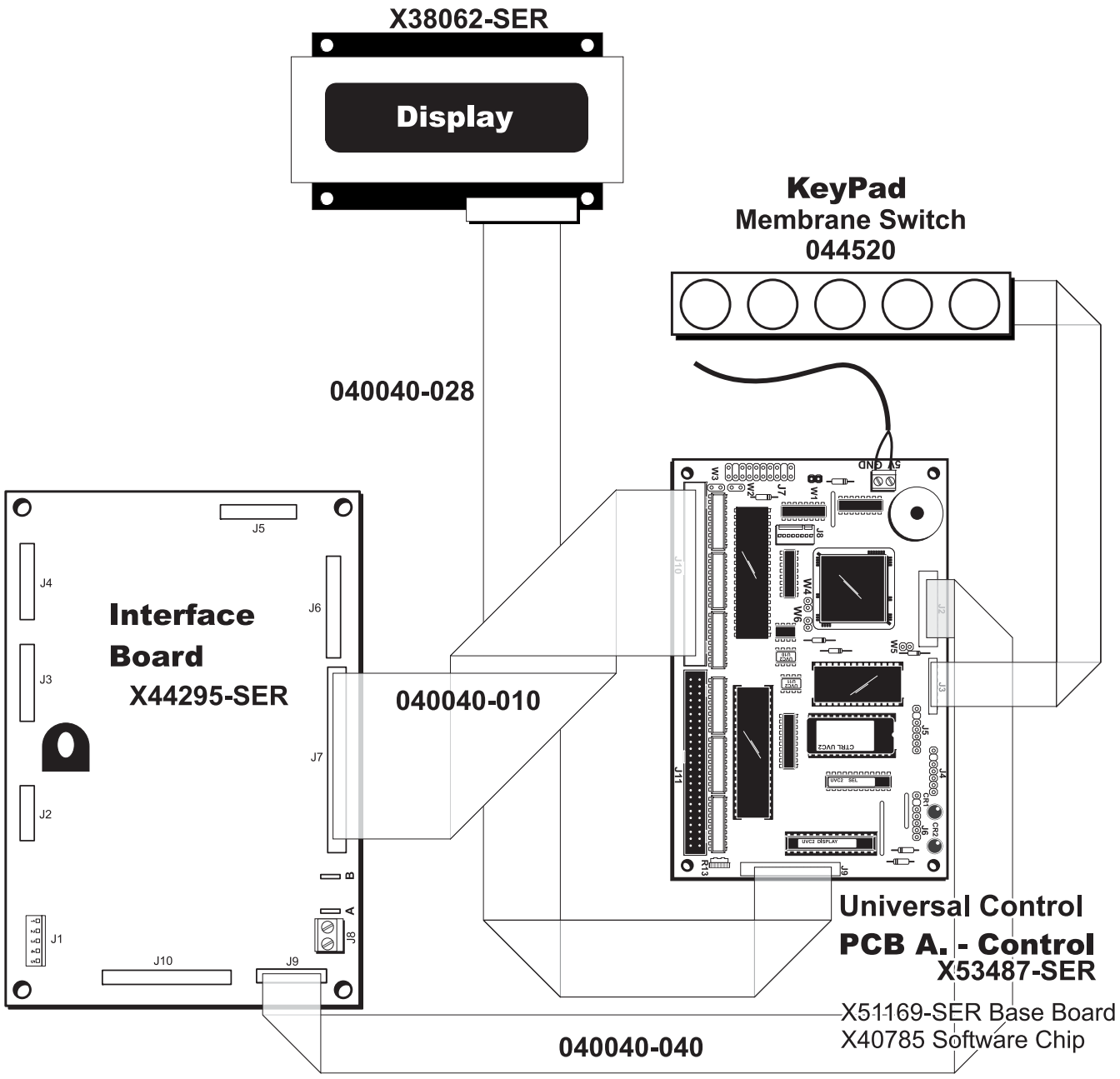

Figure 5

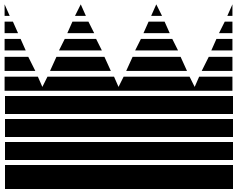

Section 3: Troubleshooting

- **General Troubleshooting**
- **Electrical Troubleshooting**
- **Control Faults**

General Troubleshooting Guide

PROBLEM	PROBABLE CAUSE	REMEDY
1. The LCD is blank.	The unit is unplugged.	Plug the main power cord into the wall receptacle.
	The fuse is blown or the circuit breaker is in the OFF position.	Replace the fuse or place the breaker in the ON position.
2. No freezer operation with the power switch in the ON position.	The beater motor is out on overload.	Place the power switch in the OFF position. Press the reset button, clear the fault, and place the freezer in the AUTO mode. **Do not use metal objects to press the reset button.**
	Cycling on high pressure cut-out.	Allow ten minutes to elapse and then place the unit in the AUTO mode.
3. With the unit in the AUTO mode of operation, the beater motor runs, but the compressor does not operate.	The compressor internal overload is tripped.	Allow the internal overload to cool. Check for high head pressure, refrigerant overcharge, stuck pistons, or tight bearings.
	The compressor is burned out.	Replace the compressor.
	The compressor is improperly wired.	Check the wiring against the diagram.
	Low line voltage.	Check the line voltage at the terminal block. Locate the cause of the voltage drop.
	The compressor contactor is single-phasing.	Replace the compressor contactor.
4. The compressor hums intermittently, but will not start. Cycling on overload.	The compressor is improperly wired.	Check the wiring against the diagram.
	Low voltage supply.	208-230 voltage must be applied.
	The PWM setting is incorrect.	Adjust the PWM setting according to instructions in this manual.
5. The product is too stiff.	The viscosity is set too cold.	See the “Operating Screen Displays” section in this manual to reset the control.
	There is inadequate mix in the hopper.	Fill the hopper with mix.
6. The product is too soft.	The viscosity control is set too warm.	See the “Operating Screen Displays” to reset the control.
	The scraper blades are worn.	Replace the blades.
	Product is being overbeaten in the freezing cylinder.	Remove the overbeaten product, and prime the unit according to instructions in the Operator’s Manual.

PROBLEM	PROBABLE CAUSE	REMEDY
7. The liquid line is frosted.	The dryer or the tubing is restricted.	Replace or remove the restrictions.
8. No product is being dispensed.	The control switch is in the OFF position.	Place the unit in the AUTO position.
	There is a freeze-up in the mix feed tube.	Adjust the hopper temperature. (Refer to the “Operating Screen” section in this manual.
	The freezer is experiencing a fault.	See page 8 of this manual to remedy the fault.
	Incorrect beater rotation. (Rotation should be clockwise when viewed from the front of the unit.)	Reverse any two of the three incoming power lines (three phase units only).
	The circuit breaker is out.	Check the breaker or fuse.
	Faulty draw switch.	Repair or replace the switch.
	Inadequate mix in the hopper.	Fill the hopper with mix.
9. Scored freezing cylinder walls.	Missing or worn front bearing on the freezer door.	Install or replace the front bearing.
	The beater assembly is bent.	Replace the beater and correct the cause of insufficient mix in the freezing cylinder.
10. Product is not feeding into the freezing cylinder.	There is inadequate mix in the hopper.	Fill the hopper with mix.
	The feed tube is improperly installed.	Correctly install the feed tube according to instructions in the Operator’s Manual (AUTO position).
	There is a freeze-up in the mix inlet hole.	Adjust the hopper temperature. (Refer to the “Operating Screen” section in this manual.)
11. The drive shaft is stuck in the drive coupling.	Mix and lubricant have collected in the drive coupling.	Brush clean the rear shell bearing area regularly.
	The corners of the drive shaft, and/or coupling are rounded.	Replace the worn component(s).

PROBLEM	PROBABLE CAUSE	REMEDY
12. An excessive amount of mix leaked through the rear of the unit into the drip pan.	There is a worn or missing drive shaft boot seal.	Replace the boot seal.
	Inadequate lubrication of the drive shaft boot seal.	Lubricate the boot seal according to the Operator's Manual.
	The rear shell bearing is worn.	Replace the bearing.
	The seal is installed inside-out.	Assemble the seal according to the Operator's Manual.
	The wrong type of lubricant is being used.	Use the lubricants recommended in the Operator's Manual.
13. The beater assembly works forward.	There is a refrigerant shortage.	Locate and repair the leak.
14. The freezer door works loose.	The stud nuts (handscrews) are not tightly installed or are damaged.	Tighten or replace the stud nuts.
	The beater assembly works forward.	See previous problem.
15. Low overrun.	The scraper blades are worn/damaged.	Replace the blades.
	The mix feed tube is not installed.	Install according to Operator's Manual.
	Beater rotates continually.	Check for electrical short or faulty contactor.
	Long "ON" cycles.	Check for sufficient mix in the hopper, a clean condenser and the correct refrigerant charge.
16. The draw valve is leaking.	Improper lubrication.	Lubricate according to the Operator's manual.
	Worn or nicked o-rings on valve.	Replace o-rings.
	Incorrect lubricant used.	Use lubricants recommended in the Operator's Manual.
17. The mix in the hopper is too cold.	The temperature is out of adjustment.	Adjust the hopper temperature setting. (Refer to the "Operating Screen" section in this manual.)
18. The mix in the hopper is too warm.	The temperature is out of adjustment.	Adjust the hopper temperature setting. (Refer to the "Operating Screen" section in this manual.)
	Warm mix has been put in the hopper.	The mix temperature should be below 40°F (4°C).
	The hopper cover and/or gasket are not correctly position.	Install the cover and the gasket properly.

Electrical Troubleshooting

The following are the paths of power to be followed:

WASH Mode

To operate the beater motor:

L1 power source – power switch – high pressure cut–out switch – reset button – interface board – coil of the beater motor contactor.

AUTO Mode

To operate the beater motor:

L1 power source – power switch – high pressure cut–out switch – reset button – interface board – coil of the beater motor contactor.

To operate the compressor:

L1 power source – power switch – high pressure cut–out switch – reset button – interface board – coil of the compressor contactor.

To operate the mix hopper cooling compressor:

L1 power source – high pressure cut–out switch – reset button – interface board – mix hopper cooling compressor.

To operate the fan:

L1 power source – high pressure cut–out switch – reset button – interface board – fan.

To operate the left PWM valve:

L1 power source – high pressure cut–out switch – reset button – interface board – left PWM.

To operate the right PWM valve:

L1 power source – high pressure cut–out switch – reset button – interface board – right PWM.

To supply power to the interface board:

L1 power source – 16 volt transformer – terminal A on the interface board.

To supply power to the universal control board:

L1 power source – 16 volt transformer – terminals 1 and 2 on the interface board (J8) – terminals 1 and 2 on the universal control board (J1).

Control Faults

When a specific fault occurs (during the AUTO or STANDBY modes), the unit will operate in the mode indicated:

FAULT	MODE
BTR OVLD OR HPCO	OFF
COMP ON TOO LONG	ON
BEATER OVER CURRENT	OFF
FUSE/MTR/COMP/PWM	
HOPPER THERM BAD	OFF
LEFT BRL THERM BAD	OFF
RIGHT BRL THERM BAD	OFF
HOPPER OVER TEMP	ON
BARREL OVER TEMP	ON
POWER FAILURE	ON

For further information, see “Fault Description Screens”, page 9.

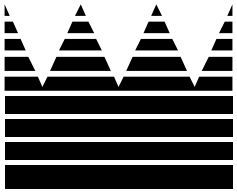

Section 4: Parts

- **Warranty Explanation**
- **Exploded Views**
- **Parts List**
- **Wiring Diagrams**

Warranty Explanation

Class 103 Parts: The warranty for new equipment parts is one year from the original date of unit installation, with a replacement parts warranty of three months.

Class 212 Parts: The warranty for new equipment parts is two years from the original date of unit installation, with a replacement parts warranty of twelve months.

Class 512 Parts: The warranty for new equipment parts is five years from the original date of unit installation, with a replacement parts warranty of twelve months.

Class 000 Parts: Wear Items - no warranty.

CAUTION: Warranty is valid only if required service work is provided by an Authorized Taylor Service Technician.

NOTE: Taylor reserves the right to deny warranty claims on equipment or parts if a non-approved refrigerant was installed in the machine, system modifications were performed beyond factory recommendations, or it is determined that the failure was caused by neglect or abuse.

Compressor Warranty Disclaimer

The refrigeration compressor(s) on this machine are warranted for the term indicated on the warranty card accompanying this machine. However, due to the Montreal Protocol and the U.S. Clean Air Act Amendments of 1990, many new refrigerants are being tested and developed; thus seeking their way into the service industry. Some of these new refrigerants are being advertised as drop-in replacements for numerous applications. It should be noted that, in the event of ordinary service to this machine's refrigeration system, only the refrigerant specified on the affixed data label should be used. The unauthorized use of alternate refrigerants will void your compressor warranty. It will be the owners' responsibility to make this fact known to any technicians they employ.

It should be noted, that Taylor does not warrant the refrigerant used in its equipment. For example, if the refrigerant is lost during the course of ordinary service to this machine, Taylor has no obligation to either supply or provide its replacement either at billable or unbillable terms.

Taylor will continue to monitor the industry and test new alternates as they are being developed. Should a new alternate prove, through our testing, that it would be accepted as a drop-in replacement, then the above disclaimer would become null and void. To find out the current status of an alternate refrigerant as it relates to your compressor, call the local Taylor Distributor or the Taylor Factory. Be prepared to provide the model/serial number of the unit in question.

Notes:

337 Exploded View

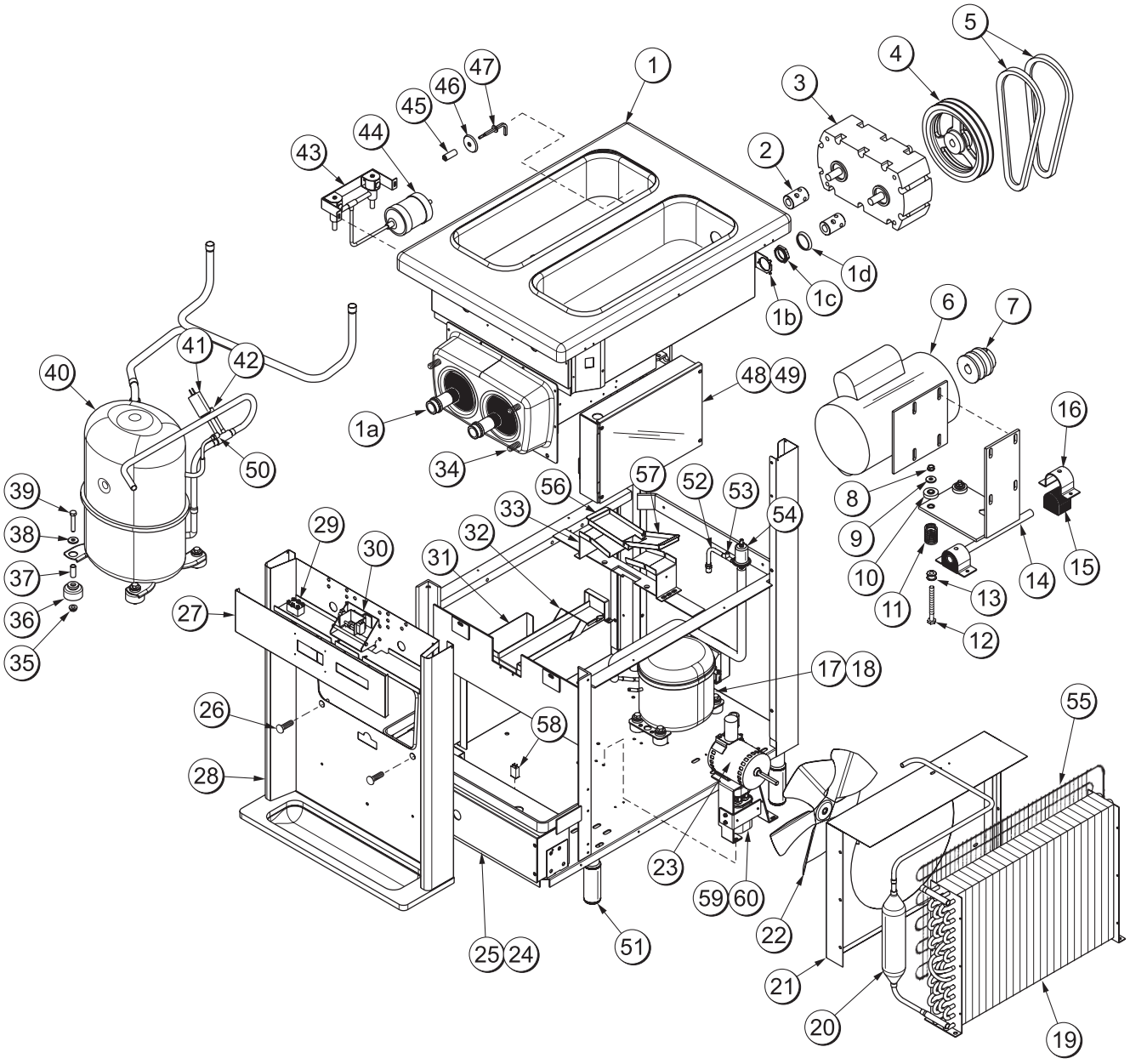

Figure 6

337 Exploded View Parts Identification

ITEM	DESCRIPTION	PART NO.
1	SHELL A.-INSULATED	X53251
1a	BEARING-REAR SHELL	031324
1b	WASHER-BEARING LOCK	012864
1c	NUT-BRASS BEARING	028991
1d	GUIDE-DRIP SEAL	028992
2	COUPLING-DRIVE 3/4 HEX	012721
3	GEAR A.*REDUCER-DUAL	042934
4	PULLEY-2AK74-5/8	027822
5	BELT-AX40	023875
6	MOTOR-1.5 HP	021522-
7	PULLEY-2AK20 X 5/8 BORE	034238
8	NUT-FLANGE STOVER GRADE	011860
9	WASHER-5/16·SAE·FLAT	017660
10	CAP-RUBBER MOUNT	011844
11	SPRING-COMP.970X.115X2.00	025707
12	SCREW-5/16-18·X·3·HEX·CAP	009497
13	GROMMET-7/16 X 5/16 SHOCK	016212
14	HINGE A.-MOTOR	X25796
15	BUSHING-MOUNTING RUBBER	012258
16	CLAMP-MOUNTING	012257
17	COMPRESSOR·TL3G-R134A	047701-
18	KIT-MOUNTING-COMPRESSOR	047704
19	CONDENSER-AC-19X14X2.5-4R	048623
20	ACCUMULATOR-COPPER·2”DIA	047062
21	SHROUD-FAN	044293
22	FAN-5·BLADE·12”PUSH·32DEG	047279
23	MOTOR-FAN·80·W·1550·RPM	051744-
24	COVER-CONTROL BOX	044289
25	CONTROL A. (See pg. 36.)	X48482-
26	BOLT-CARRIAGE 1/4-20 X 3/4ST	012347
27	PLATE·A.-DEC	X44276
28	PANEL A.-FRONT	X44247

ITEM	DESCRIPTION	PART NO.
29	SWITCH-TOGGLE-DPDT	024295
30	SWITCH A.-DRAW (See pg. 33.)	X38547
31	GUARD-WIRING *8” X 8”*GALV*	048735
32	GUIDE A.-DRIP PAN	X41816
33	GUIDE-DRIP·PAN	044288
34	STUD-NOSE CONE	022822
35	NUT-5/16-18·MF·LOCK	017327
36	GROMMET-COMPRESSOR MT	039923
37	SLEEVE-MOUNTING-COMP.	039924
38	WASHER-5/16-FLAT ZP STEEL	000651
39	SCREW-5/16-18 X 1-3/4 HEX	019691
40	COMPRESSOR AHA2490ZXD-AH556E	047519-
41	SWITCH-PRESSURE 440 PSI	048230
42	VALVE-ACCESS 1/4FL X 1/4	044404
43	VALVE A.-EXP. (See pg. 37.)	X45051
44	DRYER-FILTER-HP62 3/8 x 1/4	048901
45	SPACER-PROBE *SQ HOLE*	030966
46	DISC-PROBE *SQ HOLE*	030965
47	PROBE A.-MIX *SQUARE*	X30922
48	CONTROL A. (See pg. 34.)	X45055
49	COVER-CONTROL BOX *INTER	045104
50	VALVE-ACCESS-1/4 MFLX1/4	047016
51	LEG-4” SS-W/ORING	013458
52	VALVE·A.-ACCESS	X49653
53	TEE-1/4S-COPPER	003949
54	VALVE-EPR·1/4S	022665
55	CONDENSER-STATIC-DANFOS	036052
56	CHANNEL-REAR·BEARING	041819
57	PAN·A.-DRIP-HINGED	X41844
58	SWITCH-PUSHBUTTON	030629-
59	CAPACITOR-RUN- 4UF-440V	051785
60	BOOT-CAPACITOR INSULATING	031314

337 Panels

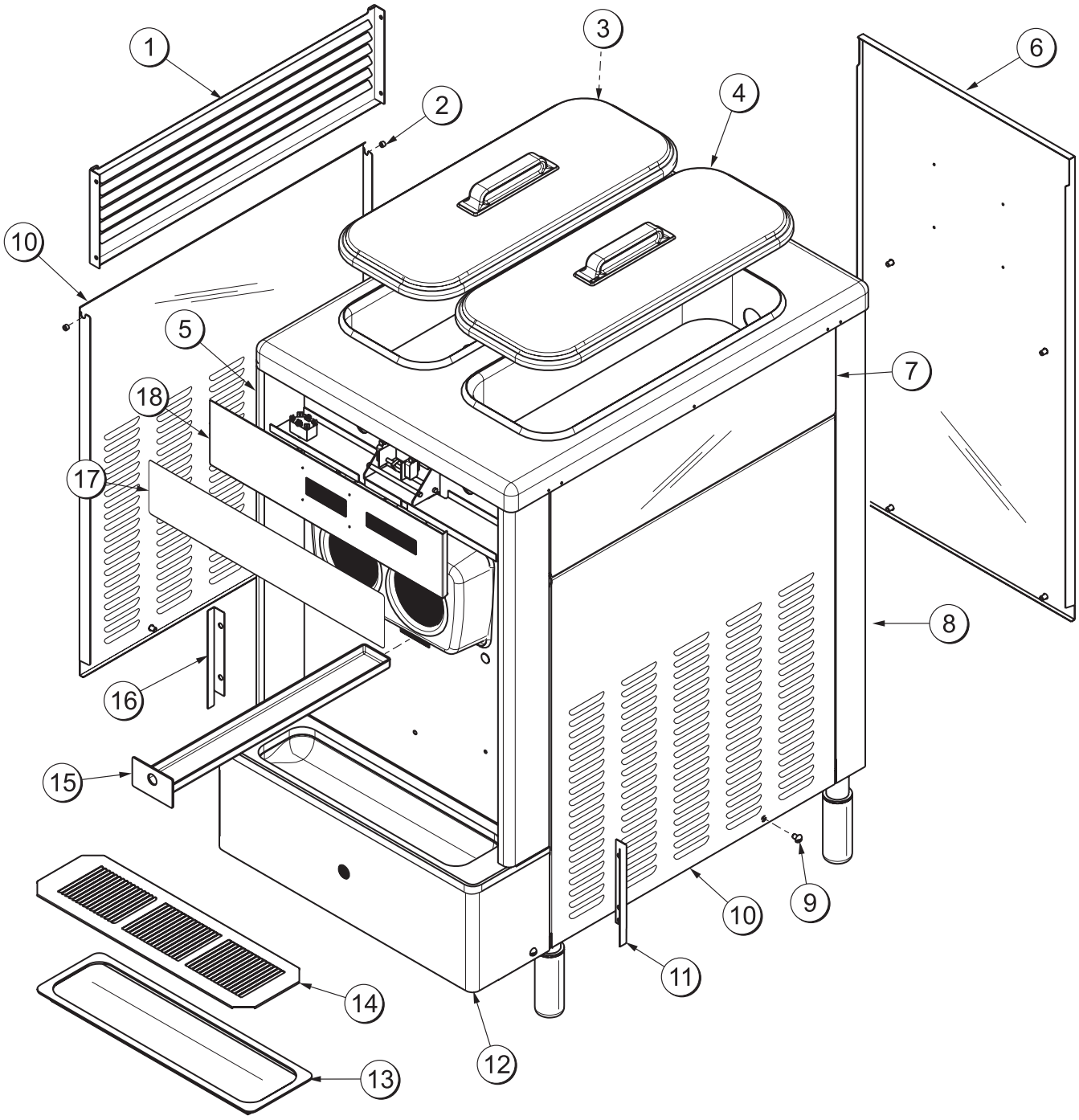

Figure 7

337 Panel Identification Parts Identification

ITEM	DESCRIPTION	PART NO.
1	LOUVER-SIDE	017471
2	BUSHING-PANEL	013289
3	TRIM-REAR CORNER L.	044280
4	COVER-HOPPER-14 QT-GRAY	041682-GRY
5	PANEL A.-FRONT	X44247
6	PANEL-REAR	044287
7	PANEL A.-SIDE	X48596
8	TRIM-REAR CORNER R.	044281
9	SCREW-1/4-20X3/8·RHM-SLS	011694

ITEM	DESCRIPTION	PART NO.
10	PANEL-SIDE	048487
11	ANGLE-PANEL R.	044285
12	TRIM-FRONT	044286
13	TRAY-DRIP 16-7/8L X 5-1/8	020157
14	SHIELD-SPLASH	022765
15	PAN-DRIP 17-1/4”LONG	027504
16	ANGLE-PANEL L.	044284
17	DECAL-DEC-TAYLOR 337	044214
18	PLATE A.-DEC	X44276

Beater Door Assembly

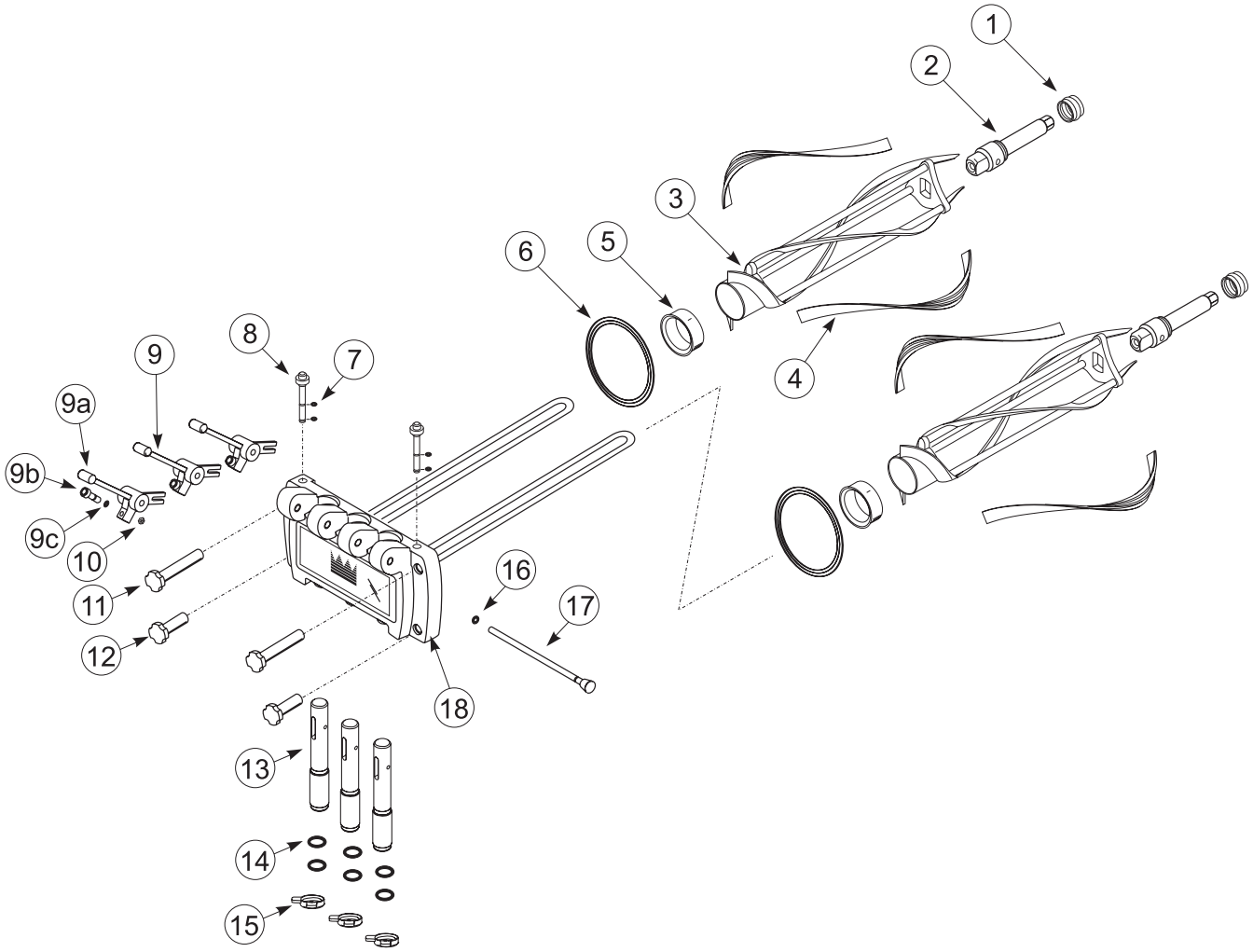

Figure 8

ITEM	DESCRIPTION	PART NO.
1	SEAL-DRIVE SHAFT	032560
2	SHAFT-BEATER	033235
3	BEATER A.-2.8 QT. HELICORE	X35466
4	BLADE-SCRAPER-PLASTIC	035480
5	BEARING-FRONT	050216
6	GASKET-DOOR HT 4" DBL	048926
7	O-RING 3/8" OD X 0.70 W	016137
8	PLUG-PRIME	028805
9	HANDLE A.-ADJ. STAINLESS	X33687
9a	HANDLE-ADJUSTABLE	028804
9b	SCREW-ADJUSTMENT SS	033662

ITEM	DESCRIPTION	PART NO.
9c	O-RING-1/4 OD X 0.70 W	015872
10	NUT-5/16-24 18-8 SS JAM	029639-BLK
11	NUT-STUD (LONG)	034382
12	NUT-STUD (SHORT)	034383
13	VALVE A.-DRAW	X18303
14	O-RING 7/8 OD X .103 W	014402
15	CAP-DESIGN 1.010" ID 6 PT.	014218
16	O-RING 5/16 OD X .070 W	016272
17	ROD A.-PIVOT	X20683
18	DOOR A.-3 SPOUT	X51532-15

Draw Switch Assembly X38547

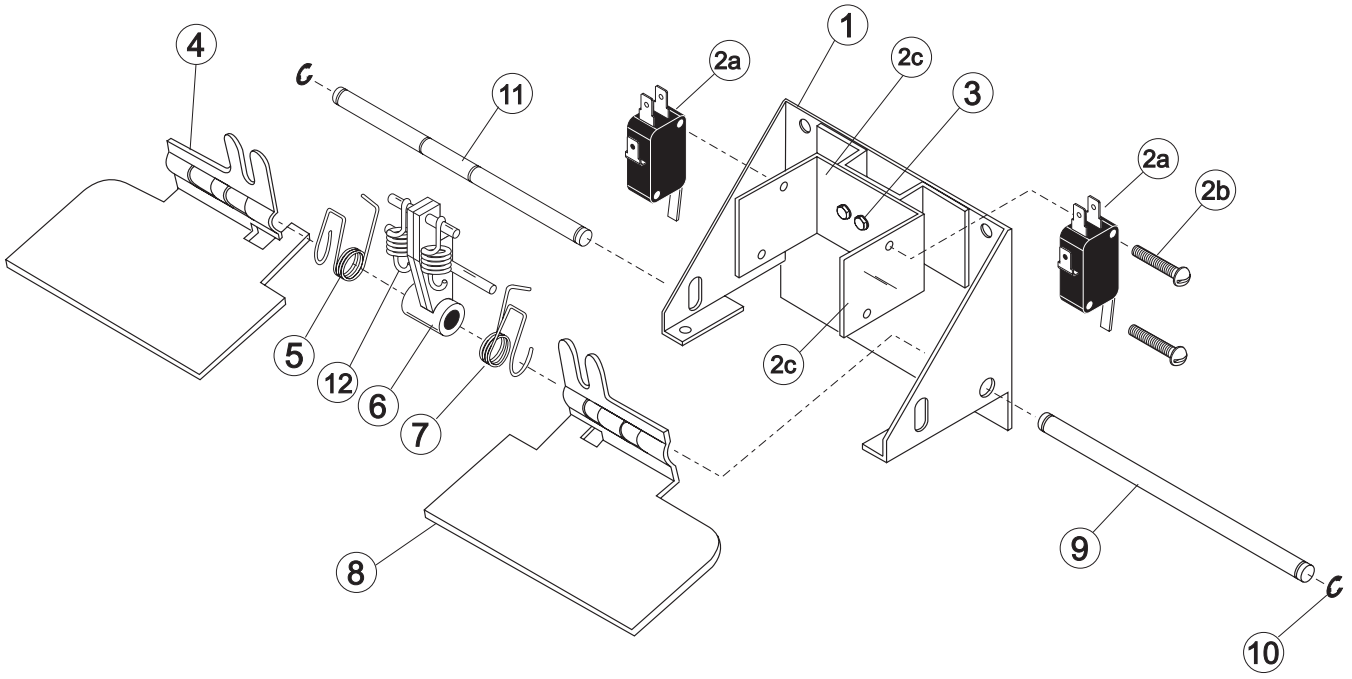

Figure 9

ITEM	DESCRIPTION	PART NO.
1	BRACKET A.-SWITCH	X38252
2	SWITCH A.-DRAW-TWIN TWIST	X39269
2a	SWITCH-LEVER-SPDT-11A-125	039252
2b	SCREW-4-40 X1/2"TAPTITE PAN	042604
2c	BRACKET-DRAW SWITCH-TWIN	039264
3	SCREW-8-32X3/8 HEX HD	039267
4	ARM-SWITCH-DRAW-LEFT-TWIN	038649
5	SPRING-RETURN-LFT-TWIN	038923

ITEM	DESCRIPTION	PART NO.
6	BRACKET A.-SPRING RETURN	X38257
7	SPRING-RETURN-RIGHT-TWIN	038924
8	ARM-SWITCH-DRAW-RIGHT	038650
9	PIN-PIVOT-DRAW SWITCH	038484
10	E-RING 1/4	032190
11	ROD-SPRING RETAINER	038254
12	SPRING-EXTENSION.375X.045	038922

Control Assembly X45055

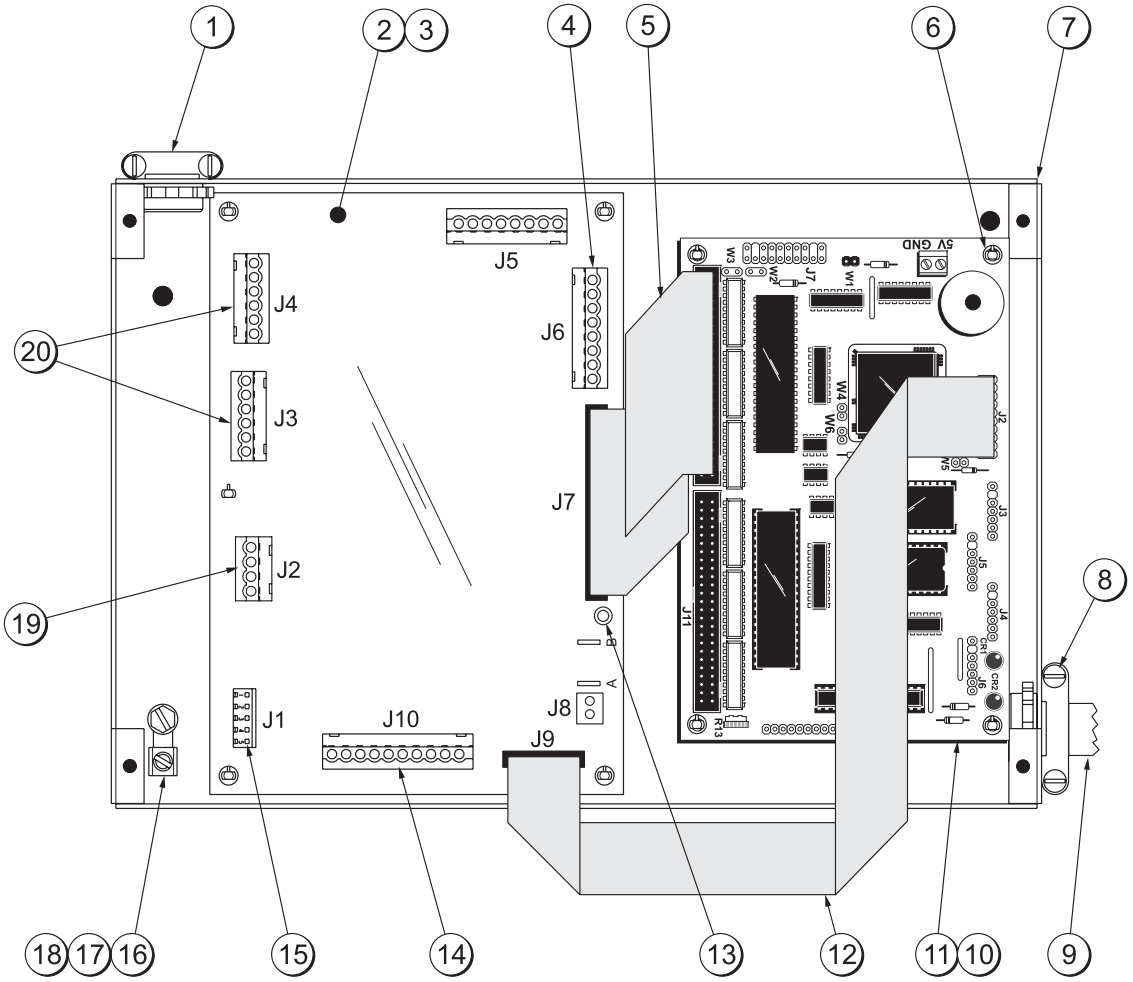

Figure 10

ITEM	DESCRIPTION	PART NO.
1	CONNECTOR-BX 3/8 STR	014569
2	PCB A.-INTERFACE	X44295-SER
3	INSULATOR-PCB-INTERFACE	045394
4	BLOCK-TERMINAL-PLUG 8P	040322-004
5	CABLE-RIBBON-50C- 5”L-DIL	040040-010
6	STANDOFF-NYLON-SNAP	053413
7	BOX A.-CONTROL	X45373
8	CONNECTOR-BX 3/4 STR	031231
9	HARNESS-WIRE-MANIN-LO V	045042
10	INSULATOR-PCB-CONTROL	045295
11	PCB A.-CONTROL	X53487-SER
12	CABLE-RIBBON-20C-14”L-DIL	040040-040

ITEM	DESCRIPTION	PART NO.
13	STANDOFF-NYLON 6-32X1/2L	040280-002
14	BLOCK-TERMINAL-PLUG 10P	040322-005
15	CONNECTOR-HOUSING 5P	040080-403
16	LUG-GROUNDING 260	020928
17	SCREW-10-32X1/2 MF HEX	020982
18	NUT-10-32 MF LOCK	020983
19	BLOCK-TERMINAL-PLUG 4P	040322-001
20	BLOCK-TERMINAL-PLUG 6P	040322-002
*	CABLE-RIBBON-14C 45”L-SIP	040040-028
*	CABLE-RIBBON-7C 35”L-SIL	040040-029
*	HOLDER-FUSE-IN LINE	045606
*	FUSE-7 AMP-IN LINE	047332

*NOT SHOWN

Plate A.-Decorative X44275

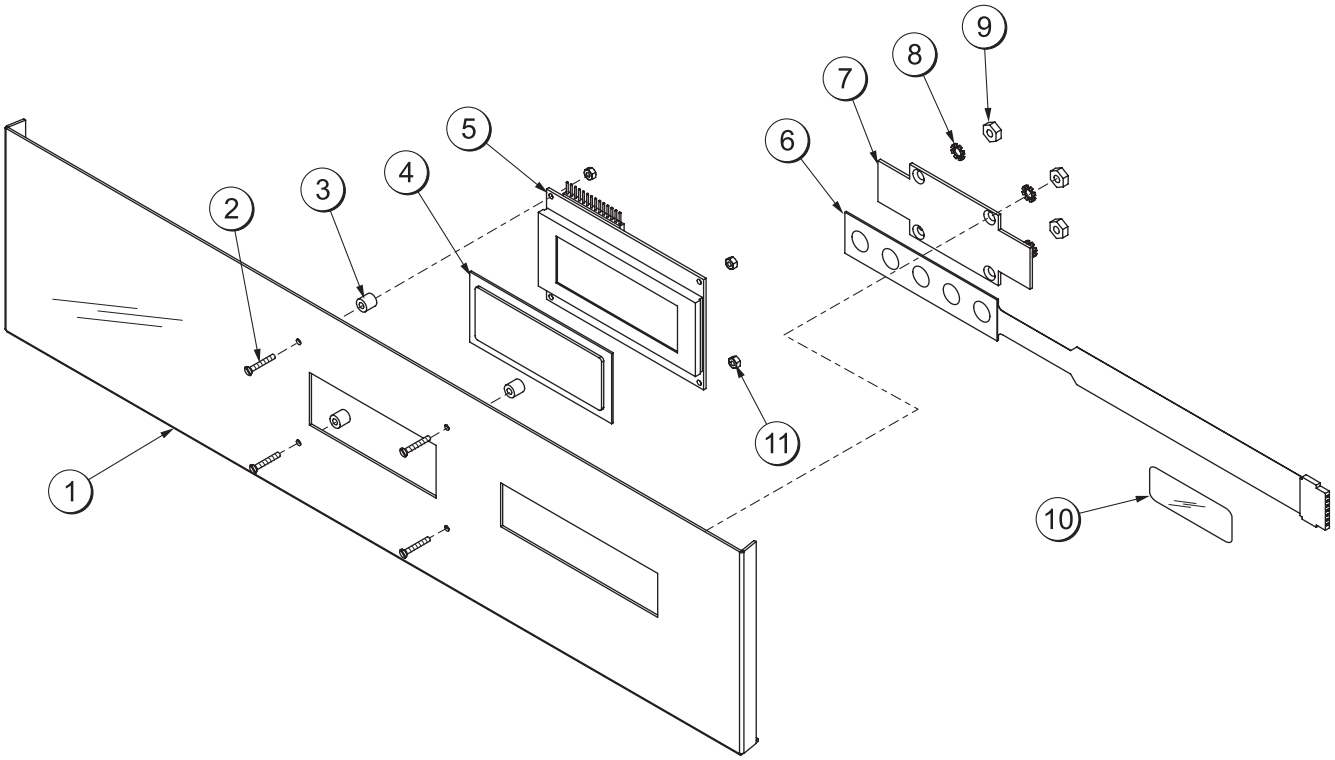

Figure 11

ITEM	DESCRIPTION	PART NO.
1	PLATE A.-DEC	X44276
2	SCREW-2-56X1/2 FHM-SLOT	038219
3	STANDOFF-LENS	038225
4	LENS-DISPLAY	038221
5	DISPLAY-LIQUID CRYSTAL	X38062-SER
6	SWITCH-MEMBRANE-5 POS.-8	044520

ITEM	DESCRIPTION	PART NO.
7	PLATE-BACK UP-MEMB. SWT	044578
8	WASHER-#6 SHAKEPROOF	024541
9	NUT-6-32 HEX	000927
10	LABEL-CAUTION	044614
11	NUT-HEX #2-56 ZINC PLATED	038220

Control Assembly X48482-

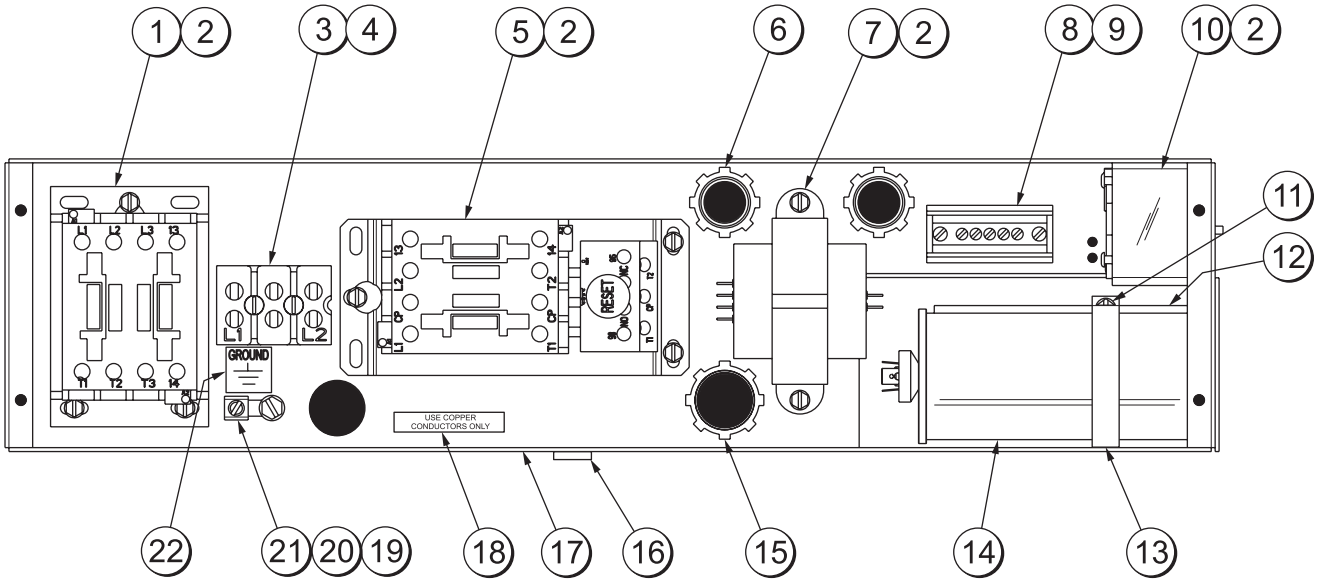

Figure 12

ITEM	DESCRIPTION	PART NO.
1	RELAY-3 POLE-20A-208/240	012725-
2	SCREW-8X1/4 SL HEX HD TYP B	009894
3	BLOCK-TERMINAL 2P-L1,L2	039422
4	SCREW-8 X 1-1/4 RD HD TYP B	039420
5	STARTER-1 PHASE-4.5 TO 7 A	041950-
6	CONNECTOR-BX 3/8 STR	014569
7	TRANS.-CONT.-40VA 120/200/24	045754
8	BLOCK-TERMINAL-7 POLE GRN	024156
9	SCREW-8 X 1/2PAN HD TYP-A	017986
10	RELAY-START-COMPRESSOR	036047
11	SCREW-10 X 3/8 TYPE B-HEX W.	015582

ITEM	DESCRIPTION	PART NO.
12	CAPACITOR-START-130-156UF	036048
13	STRAP-CAPACITOR *6 5/8*	048736
14	CAPACITOR-RUN- 35UF/440V	048132
15	CONNECTOR-BX 3/4 STR	031231
16	SWITCH-PUSHBUTTON/NEON	030629-
17	BOX A.-CONTROL	X48494
18	LABEL-COPPER COND ONLY	025948
19	NUT-10-32 MF LOCK	020983
20	SCREW-10-32X1/2 MF HEX CAP	020982
21	LUG-GROUNDING 260	020928
22	LABEL-GROUNDING SYMBOL	017669

Valve A.-Expansion X45051

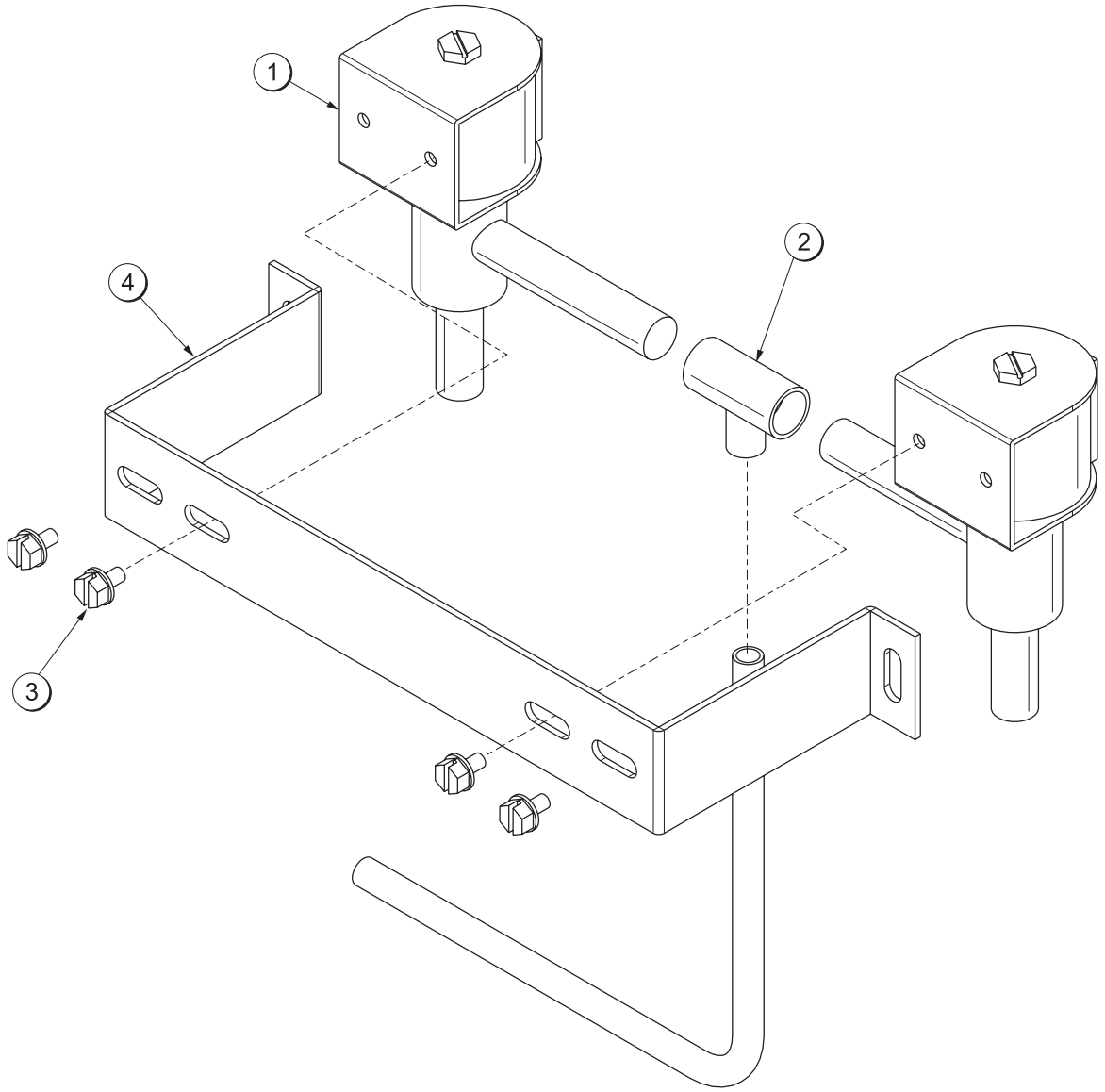

Figure 13

ITEM	DESCRIPTION	PART NO.
1*	VALVE-EXP-PULSE-3/8 S-240	044335-
2**	TEE-3/8S X 3/8S X 1/4S-COPPER	016441

ITEM	DESCRIPTION	PART NO.
3	SCREW-8X1/4 SL HEX HD TYP B	009894
4	BRACKET-MTG-PULSE VALVE	045879

*COIL-PULSE EXP VALVE - 044335-27C
**VALVE A.-EXP-PULSE *PARTIAL ASSY. - X45052

J5075161/Up - HP62 Refrigerant

DESCRIPTION	PART NUMBER	QTY.	WARR. CLASS	REMARKS	PARTS UPDATE
BEARING-FRONT	050216	2	000		
BEARING-REAR SHELL *NICK.PLATE	031324	2	000		
+GUIDE-DRIP SEAL	028992	2	000		
+NUT-BRASS BEARING	028991	2	000		
+WASHER-BEARING LOCK	012864	2	000		
BEATER A.-2.8QT-HELICORE	X35466	2	103		
+BLADE-SCRAPER-PLASTIC 13-1/4L	035480	4	000		
BELT-AX40	023875	4	000		
BLOCK-TERMINAL 2P	039422	1	103		
BLOCK-TERMINAL 7 POLE GREEN	024156	1	103		
BLOCK-TERMINAL-PLUG 4P .2 SIP	040322-001	1	103		
BLOCK-TERMINAL-PLUG 6P .2 SIP	040322-002	2	103		
BLOCK-TERMINAL-PLUG 8P .2 SIP	040322-004	1	103		
BLOCK-TERMINAL-PLUG 10P .2 SIP	040322-005	1	103		
BRUSH-DOUBLE ENDED-PUMP&FEED T	013072	1	000		
BRUSH-DRAW VALVE 1”ODX2”X17”L	013073	1	000		
BRUSH-MIX PUMP BODY-3”X7”WHITE	023316	1	000		
BRUSH-REAR BRG 1IN.DX2IN.LGX14	013071	1	000		
CABLE-RIBBON-50C - 5”L	040040-010	1	103		
CABLE-RIBBON-14C - 45”L	040040-028	1	103		
CABLE-RIBBON-7C - 35”L	040040-029	1	103		
CABLE-RIBBON-20C - 14”L	040040-040	1	103		
CAP-DESIGN-1.010”ID-6 POINT	014218	3	000		
COMPRESSOR TL3G-R134A	047701-27	1	512	SHR	
+CAPACITOR-START-60UF-220/275V	047703	1	103	SHR	
+COVER-TERMINAL-COMPRESSOR	047739	1	103	SHR	
+KIT-MOUNTING-COMPRESSOR	047704	1	103	SHR	
+RELAY-START-COMPRESSOR-TL3G	047702-27	1	103	SHR	
COMPRESSOR-AHA-2490ZXD-AH556	047519-	1	512	TECUMSEH	
+CAPACITOR-START-135-155UF/330V	036048	1	103	208-230/60/1	
+RELAY-START-COMPRESSOR	036047	1	103	208-230/60/1	
+CAPACITOR-RUN- 35UF/440V	048132	1	103	208-230/60/1	
CONDENSER-AC-19X14X2.5 4 ROW	048623	1	103		
CONDENSER-STATIC	036052	1	103	DANFOSS SYSTEM	

+ Available Separately

+ Available Separately

DESCRIPTION	PART NUMBER	QTY.	WARR. CLASS	REMARKS	PARTS UPDATE
COUPLING-DRIVE 3/4 HEX X 1-7/8	012721	2	103		
COVER-HOPPER 14QT GRAY	041682-GRY	2	103		
DECAL-CLEAN INST.-HOPPER	019029	1	000		
DECAL-DEC-TWIN-SS	044214	1	000		
DECAL-POWER SWITCH	032484	1	000	SYMBOL J9109999/ PRIOR	148
DECAL-TROUBLESHOOTING	038374	1	000		
DISPLAY-LIQUID CRYSTAL	X38062-SER	1	103		
+LENS-DISPLAY	038221	1	000		
DIAGRAM-WIRING *337*	044553-	1	000		
DOOR A.-3 SPOUT	X51532-15	1	103		
DECAL-FREEZER DOOR	021521	1	000		
+HANDLE A.-DRAW-ADJ.	X33687	3	103		
HANDLE-ADJUSTABLE	028804	3	103		
O-RING-1/4 OD X .070W 50 DURO	015872	3	000		
SCREW-ADJUSTMENT	033662	3	000		
+NUT-5/16-24 18-8 SS JAM	029639-BLK	3	000		
+PLUG-PRIME	028805	2	103		
+O-RING-3/8 OD X .070W	016137	4	000		
+ROD A.-PIVOT	X20683	1	103		
+O-RING-5/16 OD X .070W	016272	1	000		
+VALVE A.-DRAW	X18303	3	103		
+O-RING-7/8 OD X .103W	014402	6	000		
DRYER-CAP. TUBE-HP62/R134A	047699	1	000	SHR	
DRYER-FILTER-HP62-3/8 X 1/4S	048901	1	000		
EYELET-RESET BUTTON	013739	2	000		
FUSE-7 AMP - IN LINE	047332	1	000		
+HOLDER-FUSE	045606	1	103		
GASKET-DOOR HT 4”-DOUBLE	048926	2	000		
GEAR A.*REDUCER-DUAL-OUTPUT	042934	1	212		
GUIDE A.-DRIP PAN *3337*	X41816	1	103		
HINGE A.-MOTOR	X25796	1	103		
HOOD *337*	X45095	1	103	PRIOR TO J9011700 (HOOD SOLDERED TO X53251 SHELL- NOT A SEPARATE SERVICE ITEM)	
KIT A.-TUNE UP-3 SPOUT-NON HT	X49463-5	1	000		
BEARING-FRONT	050216	2	000		

+ Available Separately

DESCRIPTION	PART NUMBER	QTY.	WARR. CLASS	REMARKS	PARTS UPDATE
CAP-DESIGN-1.010"ID-6 POINT	014218	3	000		
GASKET-DOOR HT 4"-DOUBLE	048926	2	000		
O-RING .291ID X .080W	018550	6	000		
O-RING-.643 OD X .077W	018572	4	000		
O-RING-3/8 OD X .070W	016137	6	000		
O-RING-5/16 OD X .070W	016272	1	000		
O-RING-7/8 OD X .103W	014402	6	000		
SEAL-DRAW VALVE	034698	1	000		
SEAL-DRIVE SHAFT	032560	2	000		
TOOL- 0-RING REMOVAL	048260-WHT	1	000		
LABEL-DOOR CAUTION	032749	1	000		
LABEL-SW-POWER-OFF/ON-SYMBOLS	052632	1	000	J9110000/ UP	148
LABEL-WARN-COVER	051433	5	000	PANELS & CONTROL BOX	
LEG-4" W/O-RING	013458	4	103		
LOUVER-SIDE - LEFT	017471	1	103		
LUBRICANT-TAYLOR 4 OZ.	047518	1	000		
MAN-OPER 337	044869-M	1	000		
MOTOR-1.5 H.P.	021522-	1	212		
MOTOR-FAN 80 WATT 1550 RPM CW	051744-	1	103	6/01/00/ UP	
+FAN-5 BLADE 12" PUSH	047279	1	103		
+CAPACITOR-RUN- 4UF-440V	051785	1	103	6/01/00/ UP	
MOTOR-FAN - 120W	041401-	1	103	PRIOR TO 6/01/00	
+FAN-5 BLADE 12" PUSH	047279	1	103		
+CAPACITOR-RUN 4UF/370V	019624	1	103	PRIOR TO 6/01/00	
NUT-STUD *460-664-754-56*LONG	034382	2	103		
NUT-STUD *460-664-754-56*SHORT	034383	2	103		
ORIFICE	022465-100	2	103		
+O-RING-3/8 OD X .070W	016137	2	000		
PAIL-MIX 6 QT	023348	1	000		
PAN-DRIP 17-1/4"LONG	027504	1	103		
PAN A.-HINGED	X41844	1	103		
PANEL A.-FRONT *337*	X44247	1	103		
PANEL A.-UPPER SIDE RIGHT	X48596	1	103		
PANEL-REAR	044287	1	103		
PANEL-SIDE-RIGHT & LEFT	048487	1	103		

+ Available Separately

DESCRIPTION	PART NUMBER	QTY.	WARR. CLASS	REMARKS	PARTS UPDATE
PLATE A.-DEC-337	X44276	1	103		
PROBE A.-MIX *SQUARE*	X30922	2	103		
PROBE A.-MIX OUT	X41348	2	103		
PROBE A.-THERMISTOR - HOPPER	X45047-SER	1	103		
PROBE-THERMISTOR-HOPPER-2% TOL	039470-BLK	1	103		
PROBE A.-THERMISTOR - BARREL	X45046-SER	1	103		
PROBE-THERMISTOR-BARREL-2% TOL	038061-BLK	1	103		
PULLEY-2AK20 X 5/8 BORE	034238	1	103	BEATER MOTOR	
PULLEY-2AK74-5/8 BORE	027822	1	103	GEAR	
PCB A.-CONTROL *UVC2*	X53487-SER	1	212	J9071700/UP (REPLACES X45313-SER)	144
Includes:					
CHIP-SOFTWARE	X40785	1	103	J9071700/UP	144
PCB A.-UVC2	X51169-SER	1	212	J9071700/UP	144
CHIP-SOFTWARE UVC2 DISPLAY	X40872	1	103		
CHIP-SOFTWARE UVC2 CHIP-SEL	X40873	1	103		
CHIP-SOFTWARE UVC2 U10 ENGLISH	X40875	1	103		
CHIP-SOFTWARE UVC2 U11	X40876	1	103		
PCB A.-CONTROL (OLD)	X45313-SER	1	212	PRIOR TO J9071700	144
Includes:					
CHIP-SOFTWARE	X40836	1	103	PRIOR TO J9071700	144
PCB A.-UNIVERSAL CONTROL	X44863-SER	1	212	PRIOR TO J9071700	144
PCB A.-INTERFACE	X44295-SER	1	212		
RELAY-3 POLE-20A-208/240 50/60	012725-33	1	103		
SANITIZER KAY-5 125 PACKETS	041082	1	000		
SHAFT-BEATER	033235	2	103		
+SEAL-DRIVE SHAFT	032560	2	000		
SHELL A.-INSULATED *339* (NEW)	X53251	1	512	J9070000/UP	145
SHELL A.-INSULATED *339*	X45001	1	512	PRIOR TO J9070000	145
+STUD-NOSE CONE	022822	4	103		
SHIELD-SPLASH	022765	1	103		
SKIRT-AIR FLOW	048489	1	103	DEFLECTOR	
STARTER-1 PHASE-4.5 TO 7 A	041950-	1	103		
SWITCH A.-DRAW *SELF CLOSING*	X38547	1	103		
ARM-SWITCH-DRAW-LEFT	038649	1	103		
ARM-SWITCH-DRAW-RIGHT	038650	1	103		

+ Available Separately

DESCRIPTION	PART NUMBER	QTY.	WARR. CLASS	REMARKS	PARTS UPDATE
BRACKET A.-SPRING RETURN	X38257	1	103		
BRACKET A.-SWITCH *338-39-754	X38252	1	103		
E-RING 1/4	032190	4	000		
PIN-PIVOT-DRAW SWITCH	038484	1	103		
ROD-SPRING RETAINER	038254	1	103		
SCREW-8-32X3/8 HEX HD TYPE 23	039267	2	000		
SPRING-EXTENSION.375X.045X1.00	038922	2	103		
SPRING-RETURN-LEFT-TWIN TWIST	038923	1	103		
SPRING-RETURN-RIGHT-TWIN TWIST	038924	1	103		
SWITCH A.-DRAW-TWIN TWIST	X39269	1	103		
BRACKET-DRAW SWITCH-TWIN TWIST	039264	1	103		
SCREW-4-40 X1/2"TAPTITE PAN HD	042604	4	000		
SWITCH-LEVER-SPDT-11A-125-277V	039252	2	103		
SWITCH-MEMBRANE - 5 POSITION - 8"L	044520	1	103		
SWITCH-PRESSURE 440 PSI-SOLDER	048230	1	103		
SWITCH-PUSHBUTTON/NEON DISPLAY	030629-	1	103		
SWITCH-TOGGLE-DPDT-ON NONE ON	024295	1	103	POWER	
TRANS-CONT. 40VA	045754	1	103		
TRAY-DRIP - 16-7/8L X 5-1/8	020157	1	103		
TRIM-FRONT	044286	1	103		
TRIM-REAR CORNER L.	044280	1	103		
TRIM-REAR CORNER R.	044281	1	103		
TUBE A.-FEED-INNER	X32824-2	2	103		
+O-RING-INNER FEED TUBE	018550	6	000		
TUBE A.-FEED-OUTER	X34641	2	103		
+O-RING-OUTER FEED TUBE	018572	4	000		
VALVE-ACCESS 1/4 X 3/8 SOLDER	029406	1	103	MAIN L/S	
VALVE-ACCESS 1/4FL X 1/4SOLDER	044404	1	103	EPR	
VALVE-ACCESS-1/4 MFLX1/4 S-90	047016	2	103	MAIN H/S & AUX L/S	
VALVE-EPR 1/4S	022665	1	103		
VALVE-EXP-PULSE 3/8S 240VAC	044335-27	2	103		
VIDEO-TRAIN FILM-SS 337	047572-	1	000		
WASHER-PLASTIC PIVOT	013808	4	000		

+ Available Separately

DESCRIPTION	PART NUMBER	QTY.	WARR. CLASS	REMARKS	PARTS UPDATE
WATER COOLED					
CONDENSER-W/C	049309	1	103		
MOTOR-FAN -25W 230VOLT	015184-	1	103		
+FAN-5 BLADE 10” PUSH	013043	1	103		
SWITCH-PRESSURE 350PSI-SOLDER	048231	1	103		
VALVE-WATER 3/8 REG/HEAD PRESSURE	046686	1	013		
50Hz					
BELT-AX41	023876	2	000		
CAPACITOR-RUN-35UF/370VOLT	029439	1	103	220-240/50/1 COMPRESSOR	
CAPACITOR-START 135/155UF/330VOLT	036048	1	103	220-240/50/1 COMPRESSOR	
RELAY-START COMPRESSOR	036047	1	103	220-240/50/1 COMPRESSOR	
MOTOR-FAN 100W 220-240VOLT	047178-34	1	103		
+CAPACITOR-RUN- 4UF-370V	019624	1	103		
PULLEY 2AK27 X .625	011545	1	103	BEATER MOTOR	

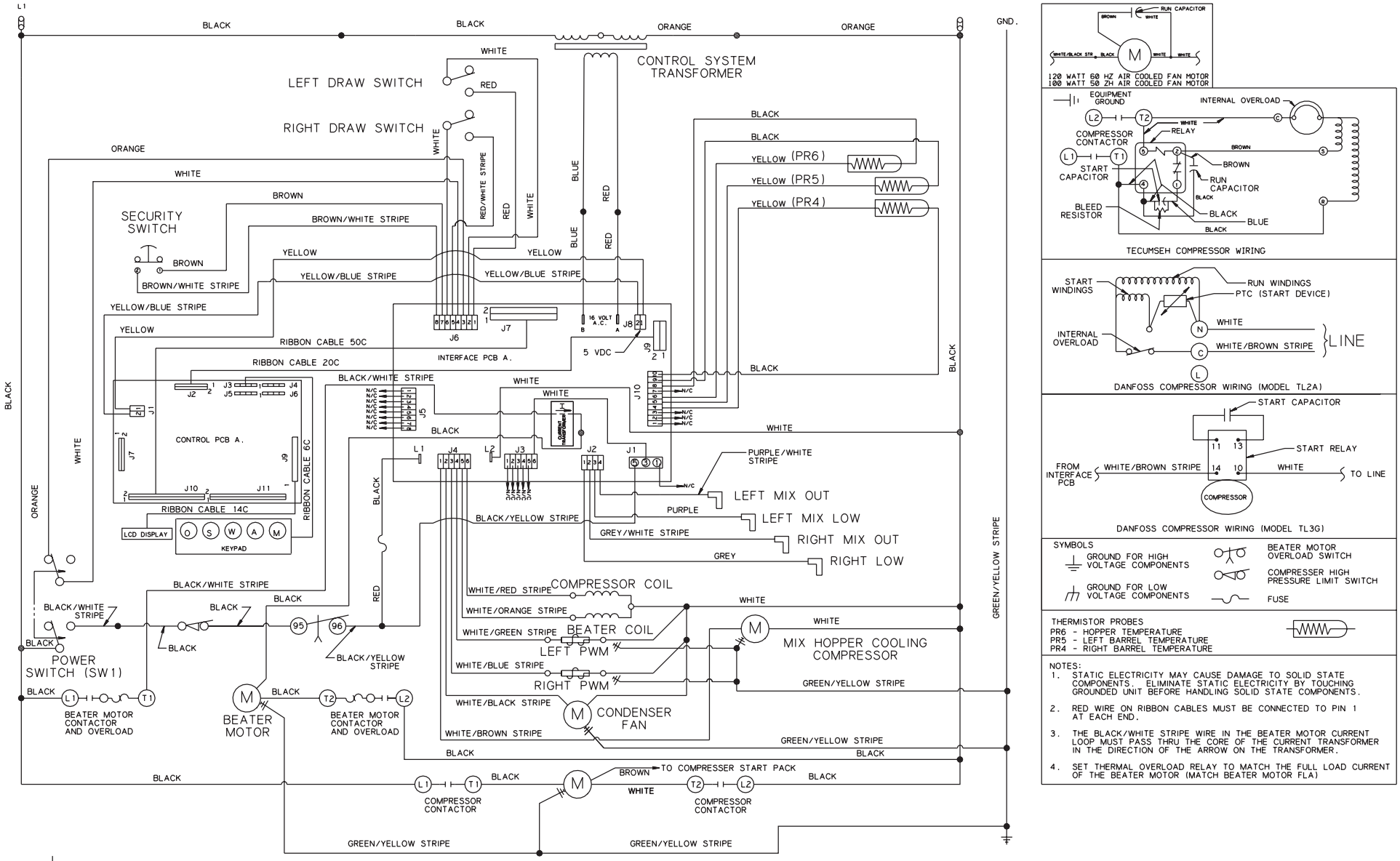

NOTES:

1. STATIC ELECTRICITY MAY CAUSE DAMAGE TO SOLID STATE COMPONENTS. ELIMINATE STATIC ELECTRICITY BY TOUCHING GROUNDED UNIT BEFORE HANDLING SOLID STATE COMPONENTS.
2. RED WIRE ON RIBBON CABLES MUST BE CONNECTED TO PIN 1 AT EACH END.
3. THE BLACK/WHITE STRIPE WIRE IN THE BEATER MOTOR CURRENT LOOP MUST PASS THRU THE CORE OF THE CURRENT TRANSFORMER IN THE DIRECTION OF THE ARROW ON THE TRANSFORMER.
4. SET THERMAL OVERLOAD RELAY TO MATCH THE FULL LOAD CURRENT OF THE BEATER MOTOR (MATCH BEATER MOTOR FLA)

Model 337
044553-27G

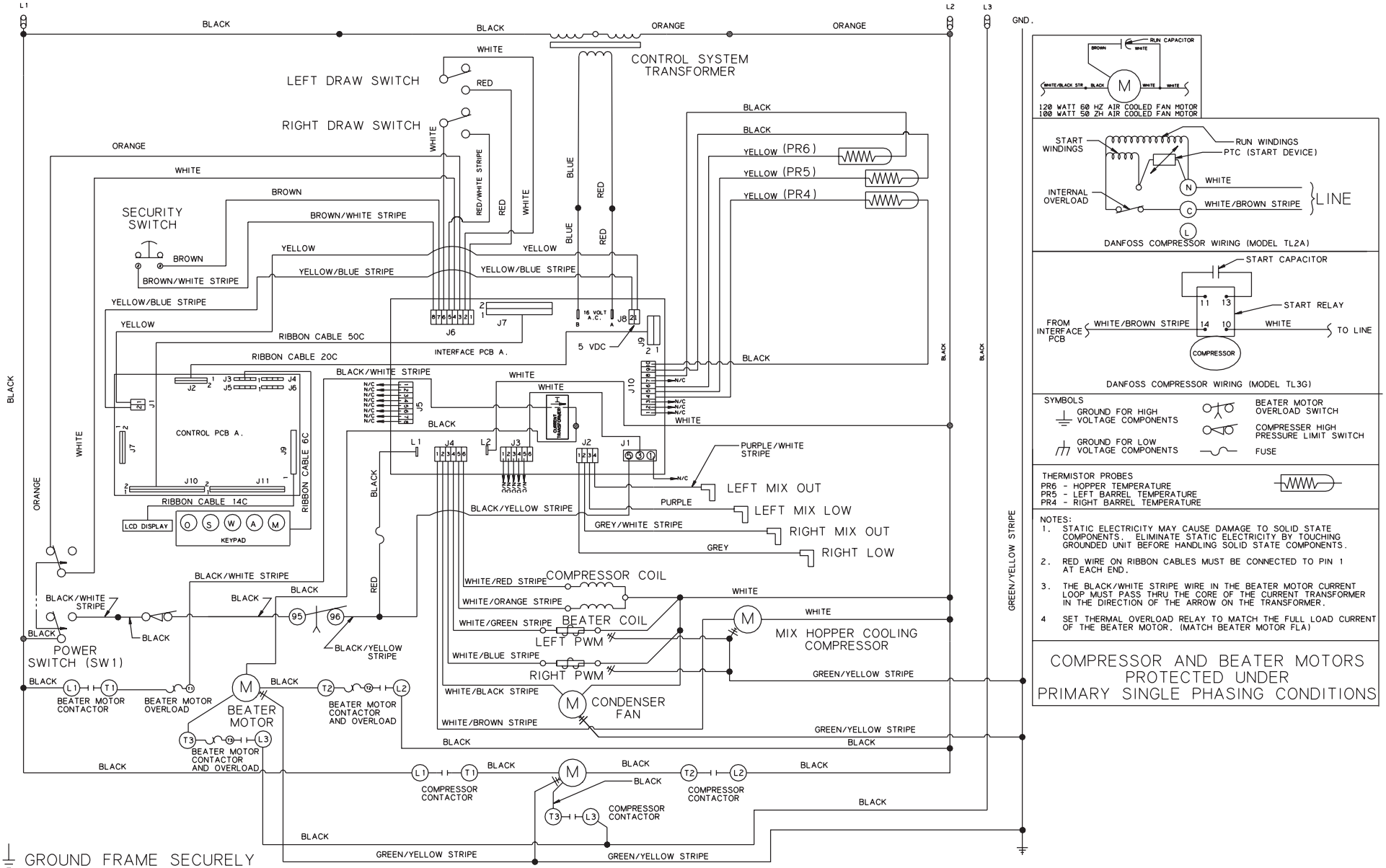

Model 337
044553-33G

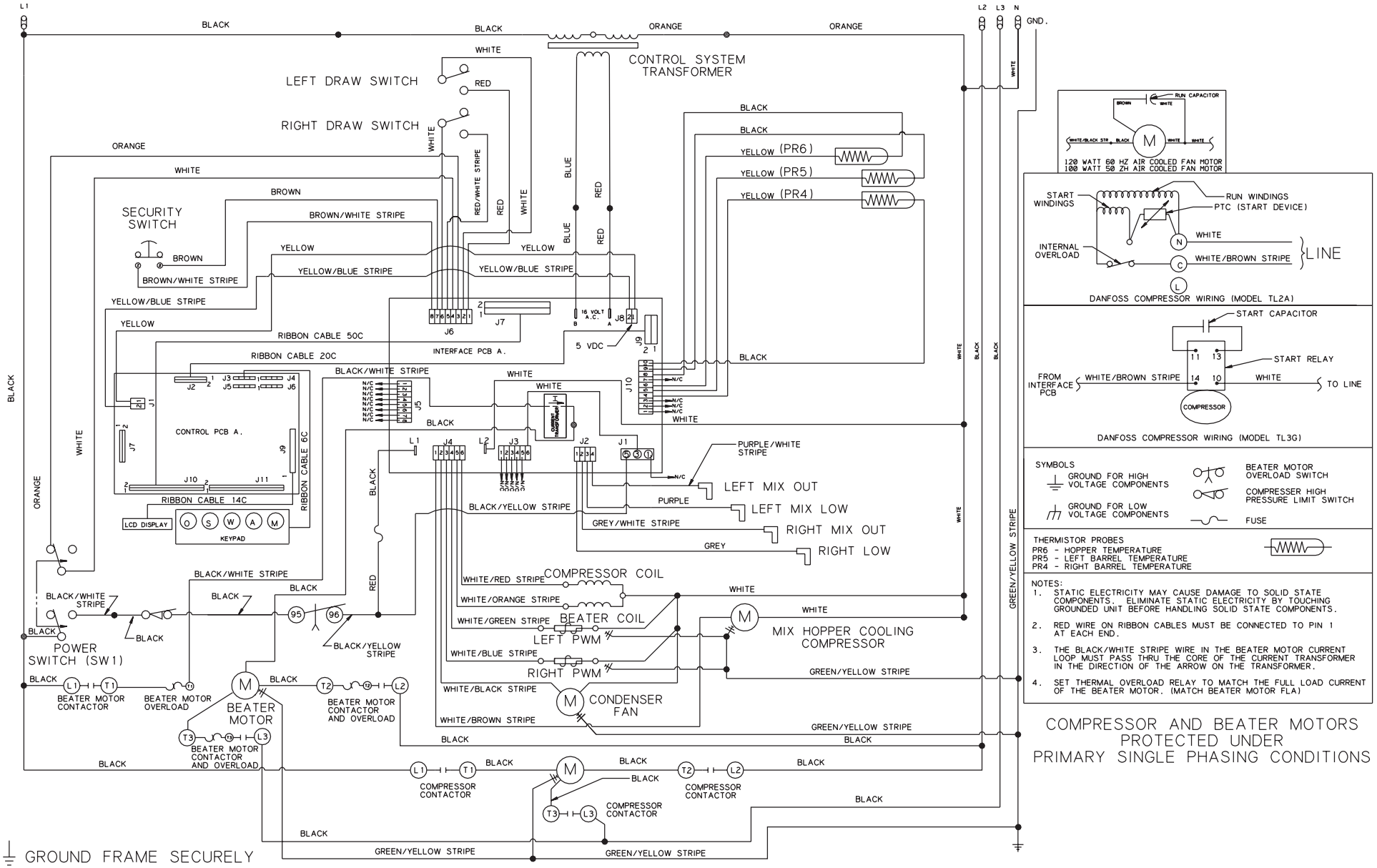

Model 337
044553-62G