MITSUBISHI ELECTRIC

SPLIT-TYPE AIR CONDITIONERS

Changes for the Better

Revision G:
- MXZ-5B42NA has been added.

Please void OBH560 REVISED EDITION-F.

OUTDOOR UNIT

SERVICE MANUAL

HFC utilized R410A

No. OBH560
REVISED EDITION-G

Models

MXZ-2B20NA, - 1
MXZ-3B24NA, - 1
MXZ-3B30NA, - 1
MXZ-4B36NA, - 1
MXZ-5B42NA

Indoor unit service manual
MSZ-A·NA Series (OB450)
MSZ-FD·NA Series (OBH497)
MSZ-FE·NA Series (OBH542)
MSZ-GE·NA Series (OBH548)
MFZ-KA·NA Series(OBH568)
SEZ-KD·NA.TH Series

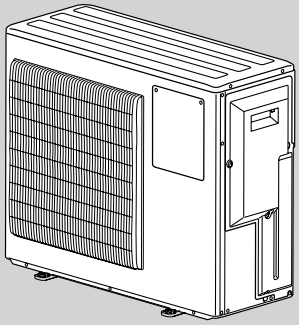

MXZ-2B20NA

CONTENTS

1. TECHNICAL CHANGES 2
2. PART NAMES AND FUNCTIONS 3
3. SPECIFICATION 4
4. NOISE CRITERIA CURVES 9
5. OUTLINES AND DIMENSIONS 11
6. WIRING DIAGRAM 15
7. REFRIGERANT SYSTEM DIAGRAM 19
8. DATA 27
9. ACTUATOR CONTROL 54
10. SERVICE FUNCTIONS 54
11. TROUBLESHOOTING 56
12. DISASSEMBLY INSTRUCTIONS 82

INDOOR UNITS COMBINATION TABLES

PARTS CATALOG (OBB560)

Mr.SLIM™

Use the specified refrigerant only

Never use any refrigerant other than that specified.
Doing so may cause a burst, an explosion, or fire when the unit is being used, serviced, or disposed of.
Correct refrigerant is specified in the manuals and on the spec labels provided with our products.
We will not be held responsible for mechanical failure, system malfunction, unit breakdown or accidents caused by failure to follow the instructions.

Revision A:
• MXZ-2B20NA- 1 has been added.

Revision B:
• MXZ-3B24NA and MXZ-4B36NA have been added.

Revision C:
• MXZ-3B30NA has been added.

Revision D:
• MXZ-3B24NA-1, MXZ-3B30NA-1, and MXZ-4B36NA-1 have been added.

Revision E:
• Errors in TROUBLESHOOTING have been corrected.

Revision F:
• FAILURE MODE RECALL FUNCTION has been corrected.

Revision G:
• MXZ-5B42NA has been added.

1 TECHNICAL CHANGES

MXZ-2B20NA

New model

MXZ-2B20NA ➔ MXZ-2B20NA -1

1. Outdoor fan motor has been changed.
2. Outdoor electronic control P.C. board has been changed.
3. LEV coil has been changed.

MXZ-3B24NA

New model

MXZ-3B30NA

New model

MXZ-3B24NA ➔ MXZ-3B24NA -1

1. Outdoor fan motor has been changed.
2. Outdoor electronic control P.C. board has been changed.

MXZ-3B30NA ➔ MXZ-3B30NA -1

1. Outdoor fan motor has been changed.
2. Outdoor electronic control P.C. board has been changed.

MXZ-4B36NA ➔ MXZ-4B36NA -1

1. Outdoor fan motor has been changed.
2. Outdoor electronic control P.C. board has been changed.

MXZ-5B42NA

New model

2 PART NAMES AND FUNCTIONS

MXZ-2B20NA

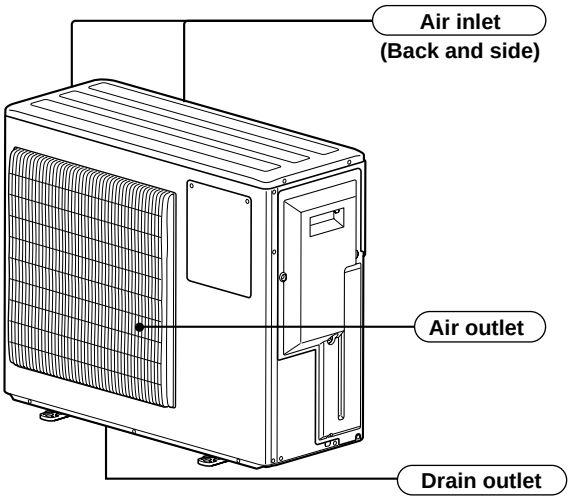

MXZ-3B24NA MXZ-3B30NA MXZ-4B36NA

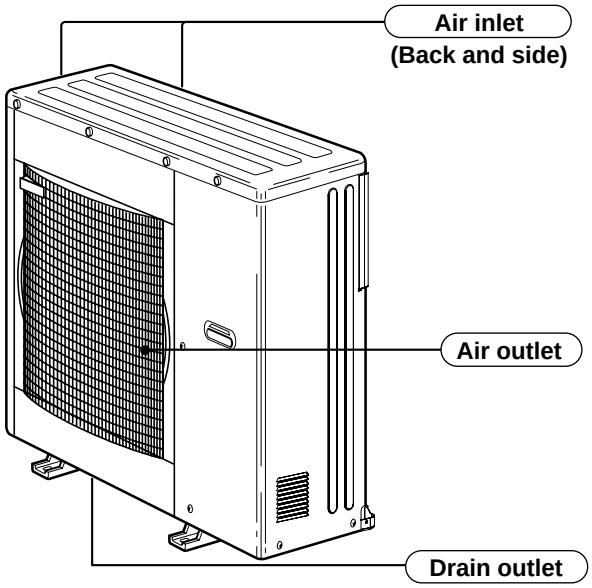

MXZ-5B42NA

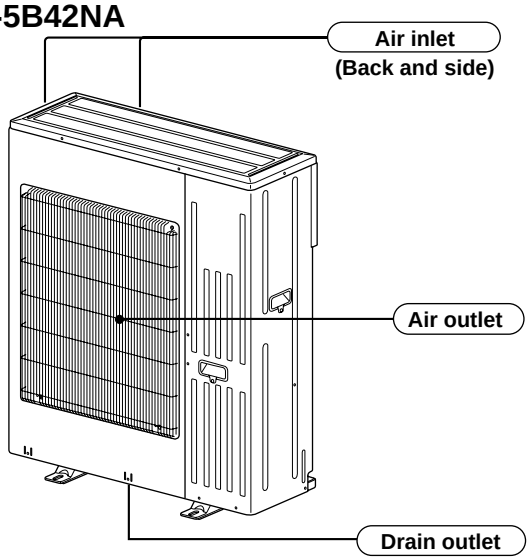

3 SPECIFICATION

Item		Outdoor model / Indoor type	MXZ-2B20NA, - 1	
			Non-Duct (09+09)	Duct (09+12)
Capacity	Cooling ❊1	Btu/h	18,000	20,000
	Heating 47 ❊1	Btu/h	22,000	22,000
	Heating 17 ❊2	Btu/h	14,500	12,500
Power consumption	Cooling ❊1	W	1,440	2,190
	Heating 47 ❊1	W	1,650	1,780
	Heating 17 ❊2	W	1,500	1,430
EER	Cooling		12.5	9.1
SEER	Cooling		18.0	15.5
HSPF IV (V)	Heating		8.9 (7.0)	8.5 (6.9)
COP	Heating		3.91	3.62
External finish			Munsell 3.0Y 7.8/1.1	
Power supply		V, phase, Hz	208/230, 1, 60	
Max. fuse size (time delay)		A	20	
Min. circuit ampacity		A	15	
Fan motor		F.L.A	0.96	
Compressor	Model		SNB130FQBH1	
	Winding resistance (at 68°F) Ω		U-V 0.98 V-W 0.98 W-U 0.98	
		R.L.A	10.1	
		L.R.A	15	
Refrigerant control			LEV	
Sound level		dB(A)	49/51	
Defrost method			Reverse cycle	
Dimensions	W	in.	33-1/16	
	D	in.	13	
	H	in.	27-15/16	
Weight		lb.	130	
Remote controller			Wireless type	
Control voltage (by built-in transformer)			12-24 V DC	
Refrigerant piping			Not supplied (optional parts)	
Valve size	Liquid	in.	1/4	
	Gas	in.	A,B: 3/8	
Connection method	Indoor		Flared	
	Outdoor		Flared	
Refrigerant charge (R410A)		lb.	5 lb. 15 oz.	
Refrigeration oil (Model)		oz.	23.7 (NEO22)	

NOTE : Test conditions are based on ARI 210/240.

Unit: °F

Mode	Test	Indoor air condition		Outdoor air condition	
		Dry bulb	Wet bulb	Dry bulb	Wet bulb
Cooling	❊1: "A" Cooling steady state at rated compressor speed	80	67	95	(75)
	"B-2" Cooling steady state at rated compressor speed	80	67	82	(65)
	"B-1" Cooling steady state at minimum compressor speed	80	67	82	(65)
	Low ambient cooling steady state at minimum compressor speed	80	67	67	(53.5)
	Intermediate cooling steady state at intermediate compressor speed	80	67	87	(69)
Heating	❊1: Standard rating-heating at rated compressor speed	70	60	47	43
	❊2: Low temperature heating at maximum compressor speed	70	60	17	15
	Maximum temperature heating at minimum compressor speed	70	60	62	56.5
	High temperature heating at minimum compressor speed	70	60	47	43
	Frost accumulation at rated compressor speed	70	60	35	33
	Frost accumulation at intermediate compressor speed	70	60	35	33

Item		Outdoor model	MXZ-3B24NA, - 1	
		Indoor type	Non-Duct (06+06+09)	Duct (09+09+09)
Capacity	Cooling ✻1	Btu/h	22,000	23,600
	Heating 47 ✻1	Btu/h	25,000	24,600
	Heating 17 ✻2	Btu/h	18,800	17,000
Power consumption	Cooling ✻1	W	1,760	2,460
	Heating 47 ✻1	W	1,750	1,900
	Heating 17 ✻2	W	2,120	2,230
EER	Cooling		12.5	9.6
SEER	Cooling		17.5	15.0
HSPF IV (V)	Heating		9.3 (7.0)	8.5 (6.9)
COP	Heating		4.20	3.80
External finish			Munsell 3.0Y 7.8/1.1	
Power supply		V, phase, Hz	208/230, 1, 60	
Max. fuse size (time delay)		A	20	
Min. circuit ampacity		A	**MXZ-3B24NA** 15	
			MXZ-3B24NA - 1 18	
Fan motor		F.L.A	0.93	
Compressor	Model		TNB220FMCH	
	Winding resistance (at 68°F) Ω		U-V 0.61 V-W 0.61 W-U 0.61	
		R.L.A	11	
		L.R.A	15	
Refrigerant control			LEV	
Sound level		dB(A)	54/49	
Defrost method			Reverse cycle	
Dimensions	W	in.	35-7/16	
	D	in.	12-19/32	
	H	in.	35-7/16	
Weight		lb.	150	
Remote controller			Wireless type	
Control voltage (by built-in transformer)			12-24 V DC	
Refrigerant piping			Not supplied (optional parts)	
Valve size	Liquid	in.	1/4	
	Gas	in.	A: 1/2 B,C: 3/8	
Connection method	Indoor		Flared	
	Outdoor		Flared	
Refrigerant charge (R410A)		lb.	7 lb. 11 oz.	
Refrigeration oil (Model)		oz.	29.4 (NEO22)	

NOTE : Test conditions are based on ARI 210/240.

Unit: °F

Mode	Test	Indoor air condition		Outdoor air condition	
		Dry bulb	Wet bulb	Dry bulb	Wet bulb
Cooling	✻1: "A" Cooling steady state at rated compressor speed	80	67	95	(75)
	"B-2" Cooling steady state at rated compressor speed	80	67	82	(65)
	"B-1" Cooling steady state at minimum compressor speed	80	67	82	(65)
	Low ambient cooling steady state at minimum compressor speed	80	67	67	(53.5)
	Intermediate cooling steady state at intermediate compressor speed	80	67	87	(69)
Heating	✻1: Standard rating-heating at rated compressor speed	70	60	47	43
	✻2: Low temperature heating at maximum compressor speed	70	60	17	15
	Maximum temperature heating at minimum compressor speed	70	60	62	56.5
	High temperature heating at minimum compressor speed	70	60	47	43
	Frost accumulation at rated compressor speed	70	60	35	33
	Frost accumulation at intermediate compressor speed	70	60	35	33

Item		Outdoor model	MXZ-3B30NA, - 1	
		Indoor type	Non-Duct (09+09+12)	Duct (09+09+12)
Capacity	Cooling ❊1	Btu/h	28,400	27,400
	Heating 47 ❊1	Btu/h	28,600	27,600
	Heating 17 ❊2	Btu/h	18,800	18,000
Power consumption	Cooling ❊1	W	3,120	3,330
	Heating 47 ❊1	W	2,150	2,220
	Heating 17 ❊2	W	2,120	2,140
EER	Cooling		9.1	8.2
SEER	Cooling		17.5	14.5
HSPF IV (V)	Heating		10.5 (7.2)	9.5 (7.0)
COP	Heating		3.90	3.64
External finish			Munsell 3.0Y 7.8/1.1	
Power supply		V, phase, Hz	208/230, 1, 60	
Max. fuse size (time delay)		A	20	
Min. circuit ampacity		A	**MXZ-3B30NA** 15	
			MXZ-3B30NA - 1 18	
Fan motor		F.L.A	0.93	
Compressor	Model		TNB220FMCH	
	Winding resistance (at 68°F) Ω		U-V 0.61 V-W 0.61 W-U 0.61	
		R.L.A	11	
		L.R.A	15	
Refrigerant control			LEV	
Sound level		dB(A)	49/49	
Defrost method			Reverse cycle	
Dimensions	W	in.	35-7/16	
	D	in.	12-19/32	
	H	in.	35-7/16	
Weight		lb.	150	
Remote controller			Wireless type	
Control voltage (by built-in transformer)			12-24 V DC	
Refrigerant piping			Not supplied (optional parts)	
Valve size	Liquid	in.	1/4	
	Gas	in.	A: 1/2 B,C: 3/8	
Connection method	Indoor		Flared	
	Outdoor		Flared	
Refrigerant charge (R410A)		lb.	7 lb. 11 oz.	
Refrigeration oil (Model)		oz.	29.4 (NEO22)	

NOTE : Test conditions are based on ARI 210/240.

Unit: °F

Mode	Test	Indoor air condition		Outdoor air condition	
		Dry bulb	Wet bulb	Dry bulb	Wet bulb
Cooling	❊1: "A" Cooling steady state at rated compressor speed	80	67	95	(75)
	"B-2" Cooling steady state at rated compressor speed	80	67	82	(65)
	"B-1" Cooling steady state at minimum compressor speed	80	67	82	(65)
	Low ambient cooling steady state at minimum compressor speed	80	67	67	(53.5)
	Intermediate cooling steady state at intermediate compressor speed	80	67	87	(69)
Heating	❊1: Standard rating-heating at rated compressor speed	70	60	47	43
	❊2: Low temperature heating at maximum compressor speed	70	60	17	15
	Maximum temperature heating at minimum compressor speed	70	60	62	56.5
	High temperature heating at minimum compressor speed	70	60	47	43
	Frost accumulation at rated compressor speed	70	60	35	33
	Frost accumulation at intermediate compressor speed	70	60	35	33

Item		Outdoor model	MXZ-4B36NA, - 1	
		Indoor type	Non-Duct (09+09+09+09)	Duct (09+09+09+09)
Capacity	Cooling ❊1	Btu/h	35,400	34,400
	Heating 47 ❊1	Btu/h	36,000	34,400
	Heating 17 ❊2	Btu/h	24,600	25,400
Power consumption	Cooling ❊1	W	3,760	3,940
	Heating 47 ❊1	W	3,020	3,100
	Heating 17 ❊2	W	3,340	3,450
EER	Cooling		9.4	8.7
SEER	Cooling		18.0	15.0
HSPF IV (V)	Heating		9.3 (7.2)	9.0(7.0)
COP	Heating		3.50	3.25
External finish			Munsell 3.0Y 7.8/1.1	
Power supply		V, phase, Hz	208/230, 1, 60	
Max. fuse size (time delay)		A	**MXZ-4B36NA** 20	
			MXZ-4B36NA - 1 25	
Min. circuit ampacity		A	**MXZ-4B36NA** 19	
			MXZ-4B36NA - 1 23	
Fan motor		F.L.A	0.93	
Compressor	Model		TNB220FMCH	
	Winding resistance (at 68°F) Ω		U-V 0.61 V-W 0.61 W-U 0.61	
		R.L.A	14.4	
		L.R.A	15	
Refrigerant control			LEV	
Sound level		dB(A)	54/57	
Defrost method			Reverse cycle	
Dimensions	W	in.	35-7/16	
	D	in.	12-19/32	
	H	in.	35-7/16	
Weight		lb.	153	
Remote controller			Wireless type	
Control voltage (by built-in transformer)			12-24 V DC	
Refrigerant piping			Not supplied (optional parts)	
Valve size	Liquid	in.	1/4	
	Gas	in.	A: 1/2 B,C,D: 3/8	
Connection method	Indoor		Flared	
	Outdoor		Flared	
Refrigerant charge (R410A)		lb.	8 lb. 13 oz.	
Refrigeration oil (Model)		oz.	29.4 (NEO22)	

NOTE : Test conditions are based on ARI 210/240.

Unit: °F

Mode	Test	Indoor air condition		Outdoor air condition	
		Dry bulb	Wet bulb	Dry bulb	Wet bulb
Cooling	❊1: "A" Cooling steady state at rated compressor speed	80	67	95	(75)
	"B-2" Cooling steady state at rated compressor speed	80	67	82	(65)
	"B-1" Cooling steady state at minimum compressor speed	80	67	82	(65)
	Low ambient cooling steady state at minimum compressor speed	80	67	67	(53.5)
	Intermediate cooling steady state at intermediate compressor speed	80	67	87	(69)
Heating	❊1: Standard rating-heating at rated compressor speed	70	60	47	43
	❊2: Low temperature heating at maximum compressor speed	70	60	17	15
	Maximum temperature heating at minimum compressor speed	70	60	62	56.5
	High temperature heating at minimum compressor speed	70	60	47	43
	Frost accumulation at rated compressor speed	70	60	35	33
	Frost accumulation at intermediate compressor speed	70	60	35	33

Item		Outdoor model	MXZ-5B42NA	
		Indoor type	Non-Duct (06+09+09+09+09)	Duct (09+09+09+09+09)
Capacity	Cooling ❊1	Btu/h	40,800	37,200
	Heating 47 ❊1	Btu/h	45,200	41,200
	Heating 17 ❊2	Btu/h	30,500	31,100
Power consumption	Cooling ❊1	W	4,800	3,960
	Heating 47 ❊1	W	3,780	3,660
	Heating 17 ❊2	W	4,850	4,950
EER	Cooling		8.5	9.4
SEER	Cooling		18.4	14.5
HSPF IV (V)	Heating		9.8 (7.1)	8.7(6.6)
COP	Heating		3.51	3.30
External finish			Munsell 3.0Y 7.8/1.1	
Power supply		V, phase, Hz	208/230, 1, 60	
Max. fuse size (time delay)		A	40	
Min. circuit ampacity		A	36.2	
Fan motor		F.L.A	1.90	
Compressor	Model		TNB306FPGM2	
	Winding resistance (at 68°F) Ω		U-V 0.53 V-W 0.53 W-U 0.53	
		R.L.A	23.8	
		L.R.A	27	
Refrigerant control			LEV	
Sound level		dB(A)	58/58	
Defrost method			Reverse cycle	
Dimensions	W	in.	35-7/16	
	D	in.	12-19/32	
	H	in.	42-1/8	
Weight		lb.	192	
Remote controller			Wireless type	
Control voltage (by built-in transformer)			12-24 V DC	
Refrigerant piping			Not supplied (optional parts)	
Valve size	Liquid	in.	1/4	
	Gas	in.	A: 1/2 B,C,D,E: 3/8	
Connection method	Indoor		Flared	
	Outdoor		Flared	
Refrigerant charge (R410A)		lb.	10 lb. 9 oz.	
Refrigeration oil (Model)		oz.	36.2(FV50S)	

NOTE : Test conditions are based on ARI 210/240.

Unit: °F

Mode	Test	Indoor air condition		Outdoor air condition	
		Dry bulb	Wet bulb	Dry bulb	Wet bulb
Cooling	❊1: "A" Cooling steady state at rated compressor speed	80	67	95	(75)
	"B-2" Cooling steady state at rated compressor speed	80	67	82	(65)
	"B-1" Cooling steady state at minimum compressor speed	80	67	82	(65)
	Low ambient cooling steady state at minimum compressor speed	80	67	67	(53.5)
	Intermediate cooling steady state at intermediate compressor speed	80	67	87	(69)
Heating	❊1: Standard rating-heating at rated compressor speed	70	60	47	43
	❊2: Low temperature heating at maximum compressor speed	70	60	17	15
	Maximum temperature heating at minimum compressor speed	70	60	62	56.5
	High temperature heating at minimum compressor speed	70	60	47	43
	Frost accumulation at rated compressor speed	70	60	35	33
	Frost accumulation at intermediate compressor speed	70	60	35	33

4 NOISE CRITERIA CURVES

MXZ-2B20NA

FAN SPEED	FUNCTION	SPL(dB(A))	LINE
High	Cooling	49	●——●
High	Heating	51	○——○

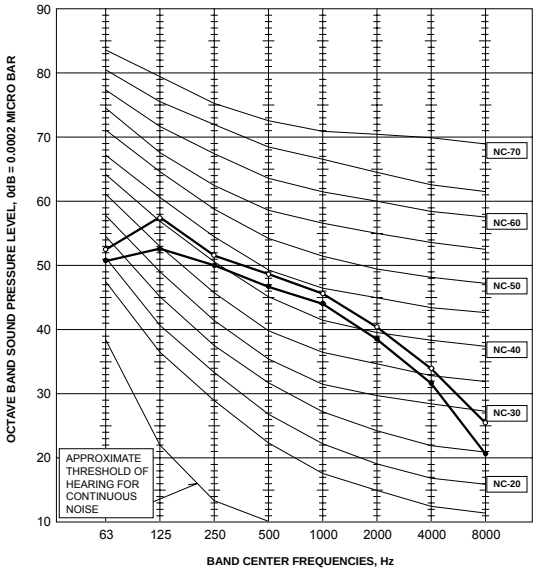

MXZ-3B24NA

FAN SPEED	FUNCTION	SPL(dB(A))	LINE
High	Cooling	54	●——●
High	Heating	49	○——○

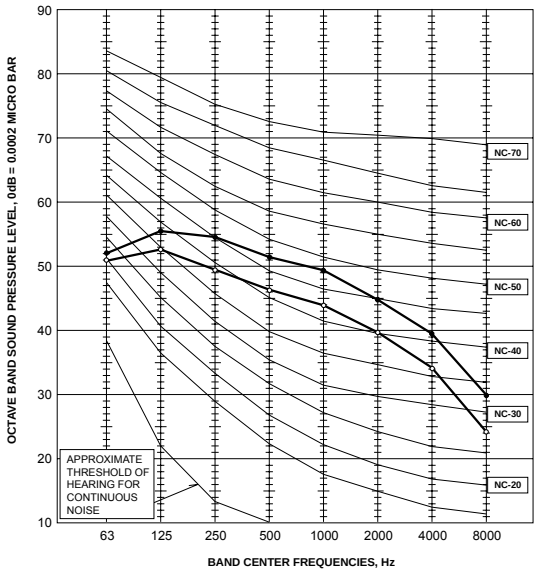

MXZ-3B30NA

FAN SPEED	FUNCTION	SPL(dB(A))	LINE
High	Cooling	49	●——●
High	Heating	49	○——○

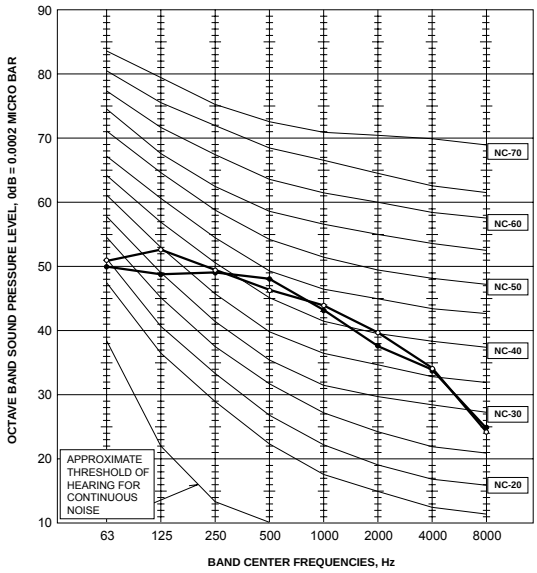

MXZ-4B36NA

FAN SPEED	FUNCTION	SPL(dB(A))	LINE
High	Cooling	54	●——●
High	Heating	57	○——○

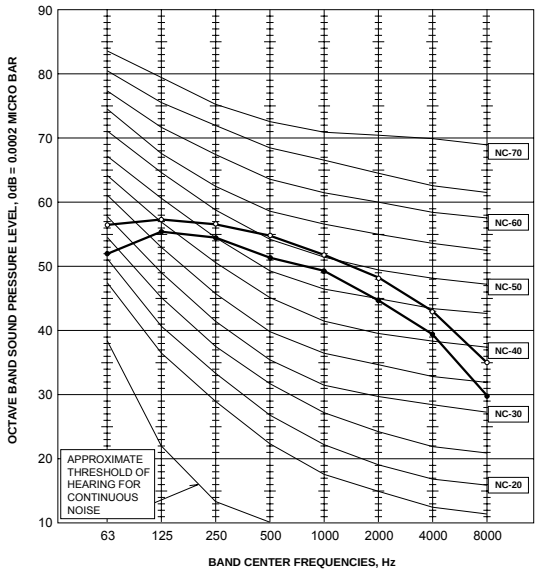

MXZ-5B42NA

FAN SPEED	FUNCTION	SPL(dB(A))	LINE
High	Cooling	58	●——●
High	Heating	58	○——○

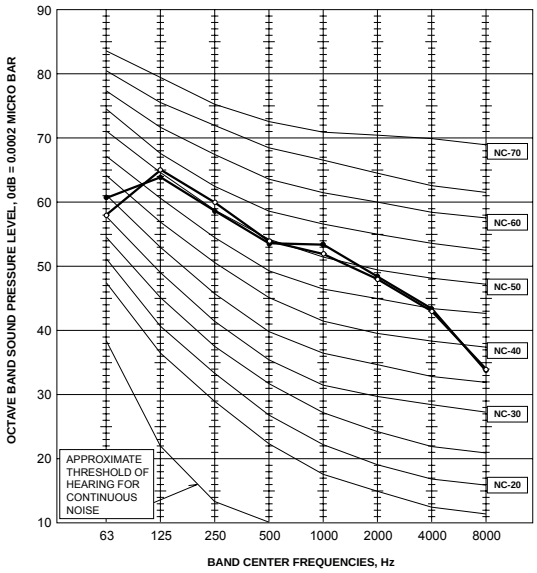

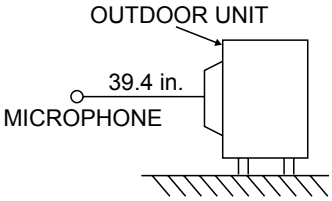

Test conditions

Cooling: Dry-bulb temperature 95°F Wet-bulb temperature 75°F

Heating: Dry-bulb temperature 45°F Wet-bulb temperature 43°F

5 OUTLINES AND DIMENSIONS

MXZ-2B20NA **Unit: inch**

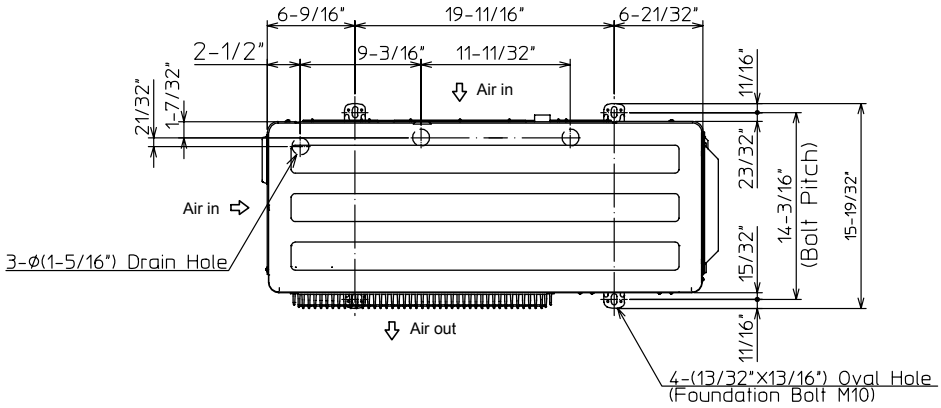

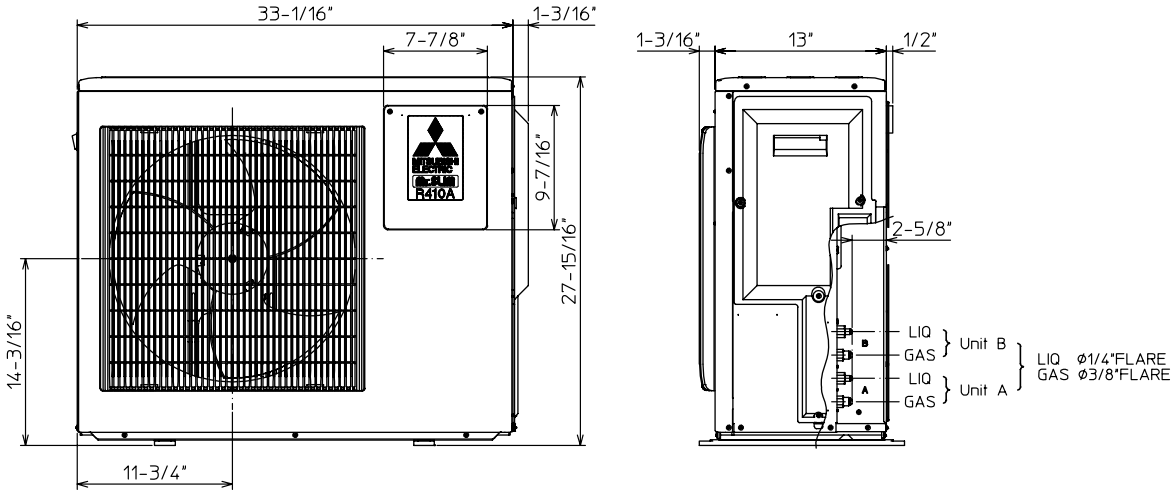

1.Installation space

Note : Leave front and both sides free of obstruction.

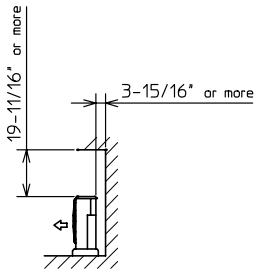

Note : Leave front and overhead free of obstruction.

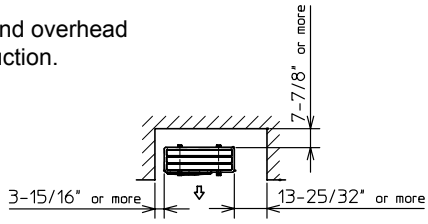

Note : Leave rear, overhead and both sides free of obstruction.

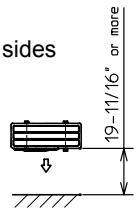

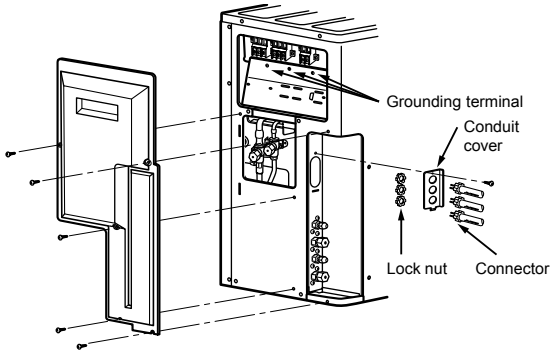

2.Service space

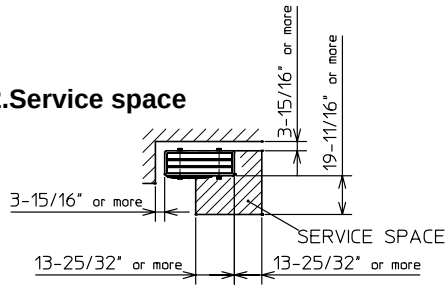

MXZ-3B24NA
MXZ-3B30NA

Unit: inch

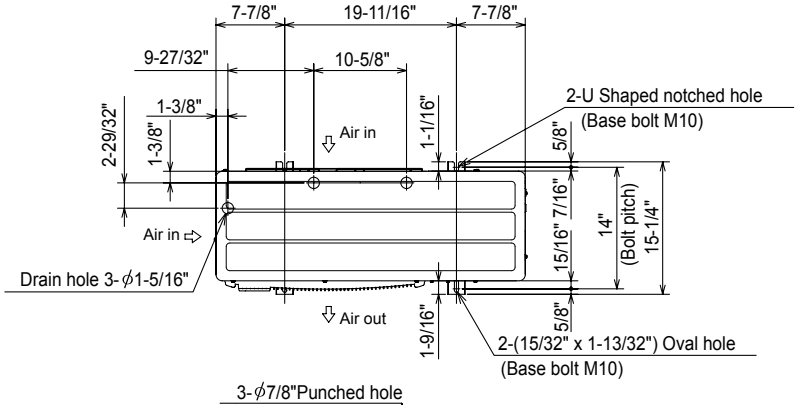

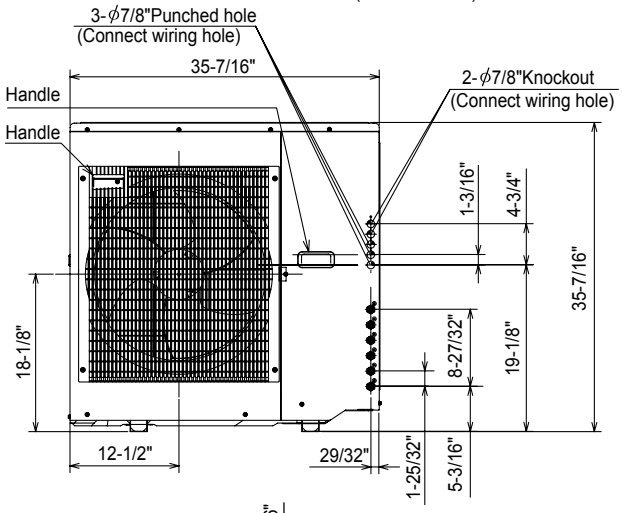

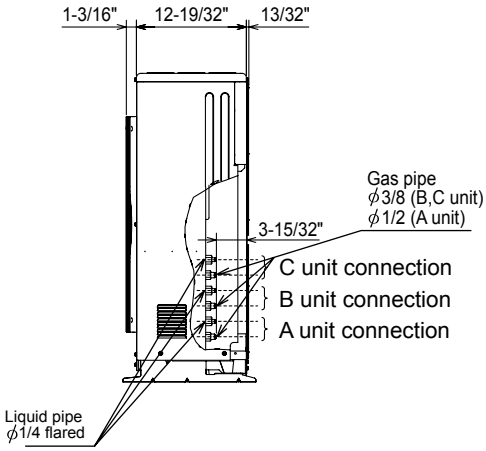

1.Installation space

Note : Leave front and both sides free of obstruction.

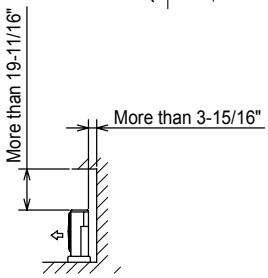

Note : Leave front and overhead free of obstruction.

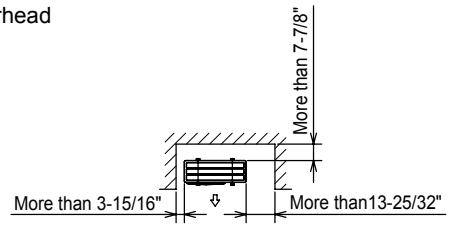

Note : Leave rear, overhead and both sides free of obstruction.

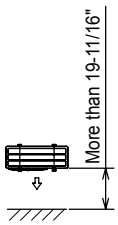

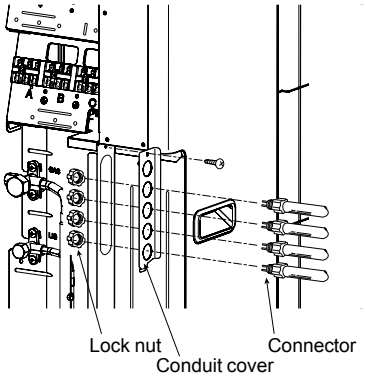

2.Service space

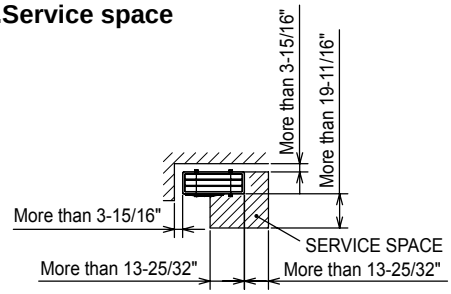

MXZ-4B36NA

Unit: inch

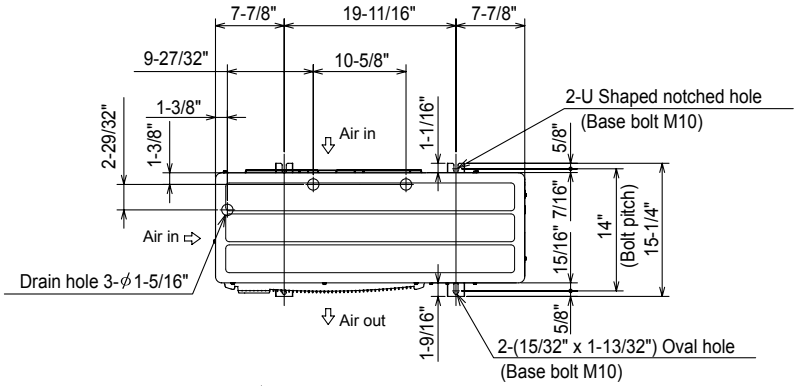

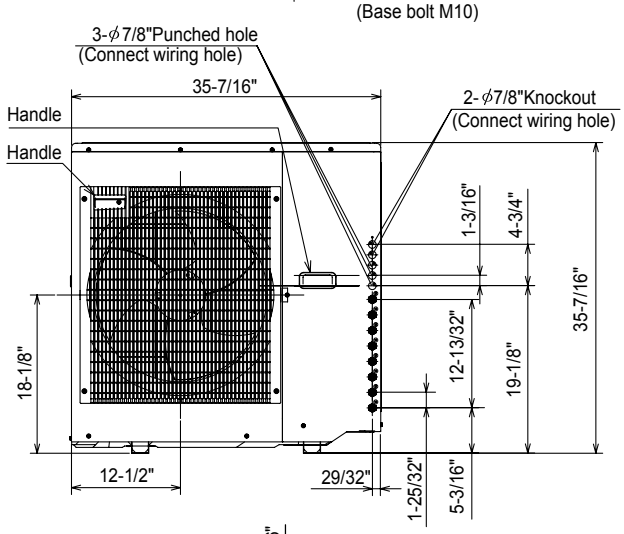

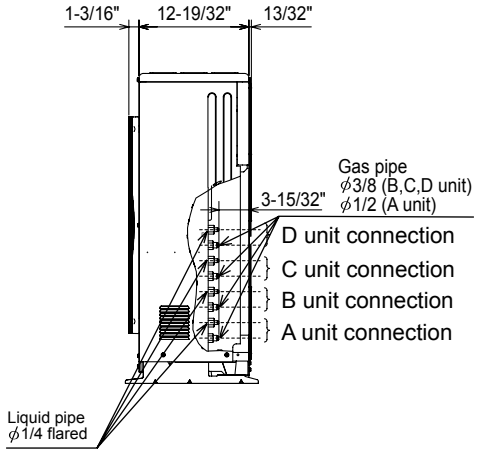

1.Installation space

Note : Leave front and both sides free of obstruction.

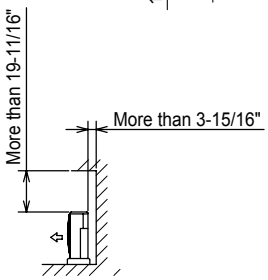

Note : Leave front and overhead free of obstruction.

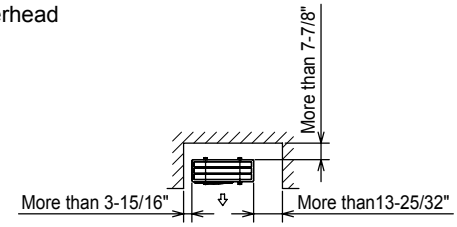

Note : Leave rear, overhead and both sides free of obstruction.

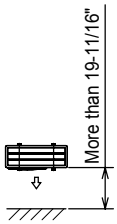

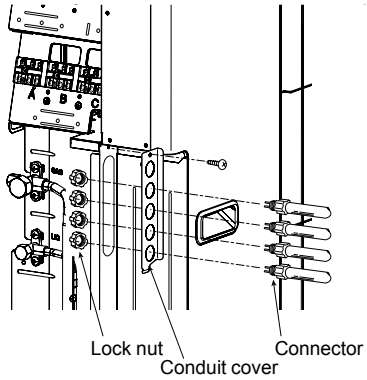

2.Service space

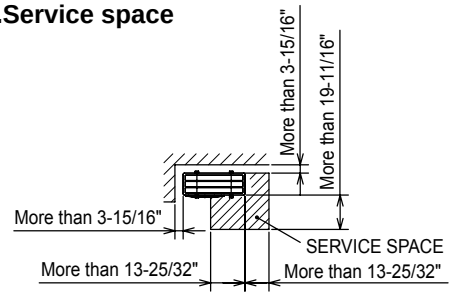

MXZ-5B42NA

Unit: inch

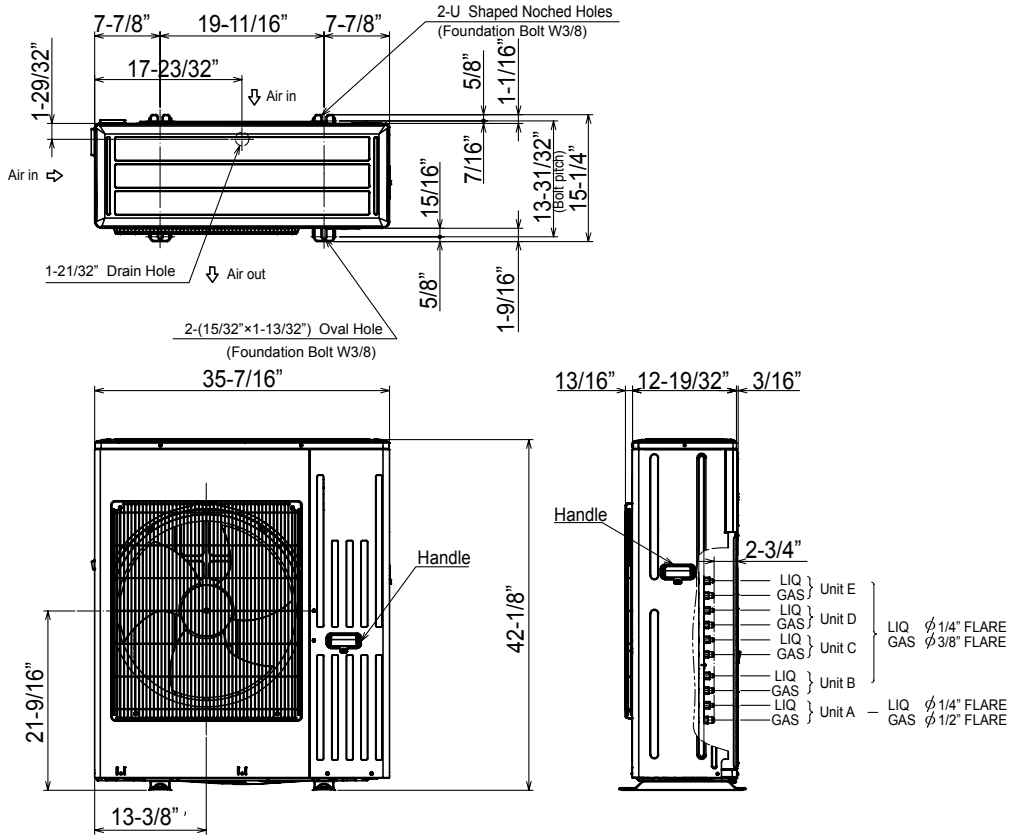

1. Installation space

Note : Leave front and both sides free of obstruction.

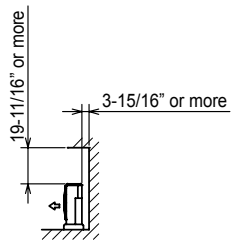

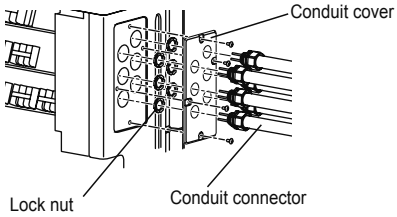

Note : Leave front and overhead free of obstruction.

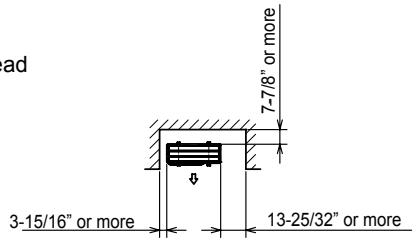

Note : Leave rear, overhead and both sides free of obstruction.

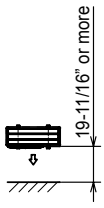

2. Service space

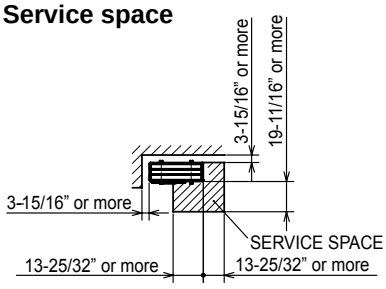

6 WIRING DIAGRAM

MXZ-2B20NA

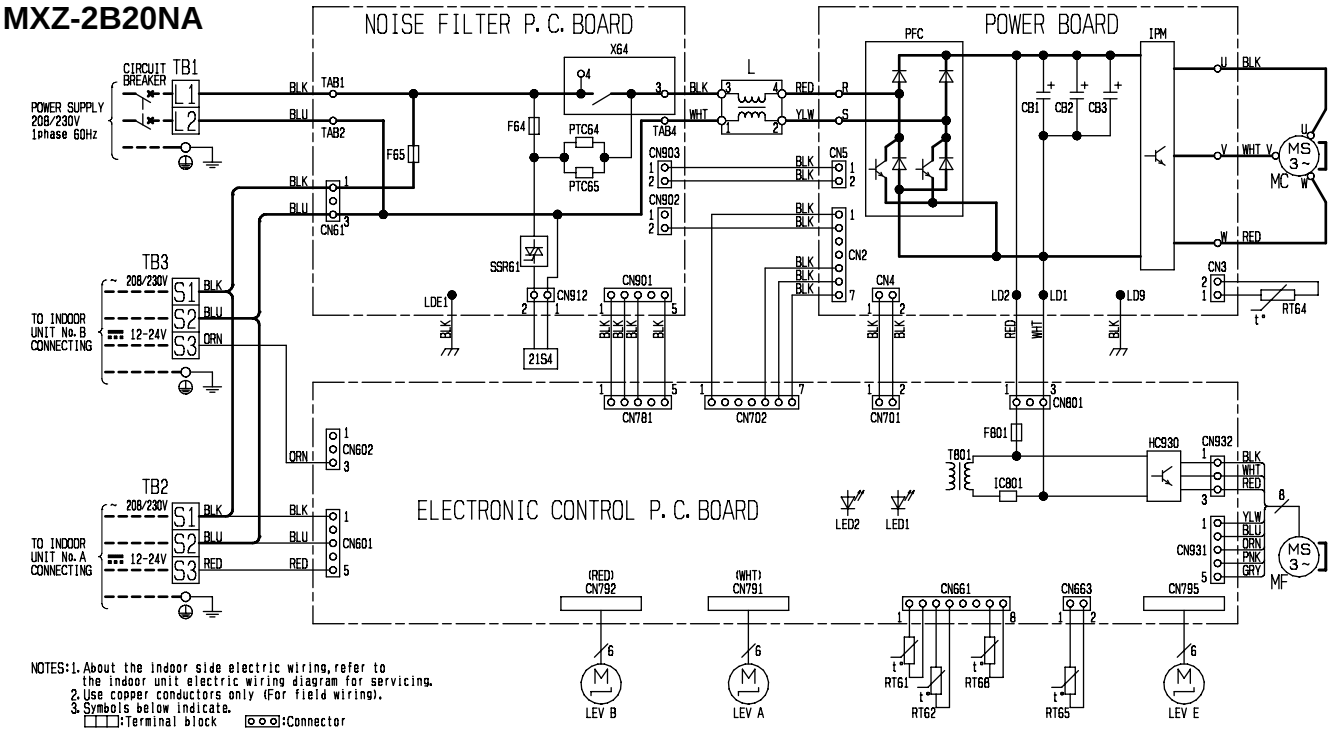

SYMBOL	NAME	SYMBOL	NAME	SYMBOL	NAME	SYMBOL	NAME	SYMBOL	NAME
CB1~3	SMOOTHING CAPACITOR	IPM	POWER MODULE	MF	FAN MOTOR	RT65	AMBIENT TEMP. THERMISTOR	21S4	REVERSING VALVE SOLENOID COIL
F64	FUSE (T2AL250V)	L	REACTOR	PFC	POWER FACTOR CONTROLLER	RT68	OUTDOOR HEAT EXCHANGER TEMP. THERMISTOR		
F65	FUSE (T6.3AL250V)	LED1, 2	LED	PTC64, 65	CIRCUIT PROTECTION	SSR61	SOLENOID COIL RELAY		
F801	FUSE (T3.15AL250V)	LEV A, B	EXPANSION VALVE	RT61	DEFROST THERMISTOR	T801	TRANSFORMER		
HC930	POWER MODULE	LEV E	EXPANSION VALVE	RT62	DISCHARGE TEMP. THERMISTOR	TB1~3	TERMINAL BLOCK		
IC801	POWER DEVICE	MC	COMPRESSOR	RT64	FIN TEMP. THERMISTOR	X64	RELAY		

MXZ-2B20NA - 1

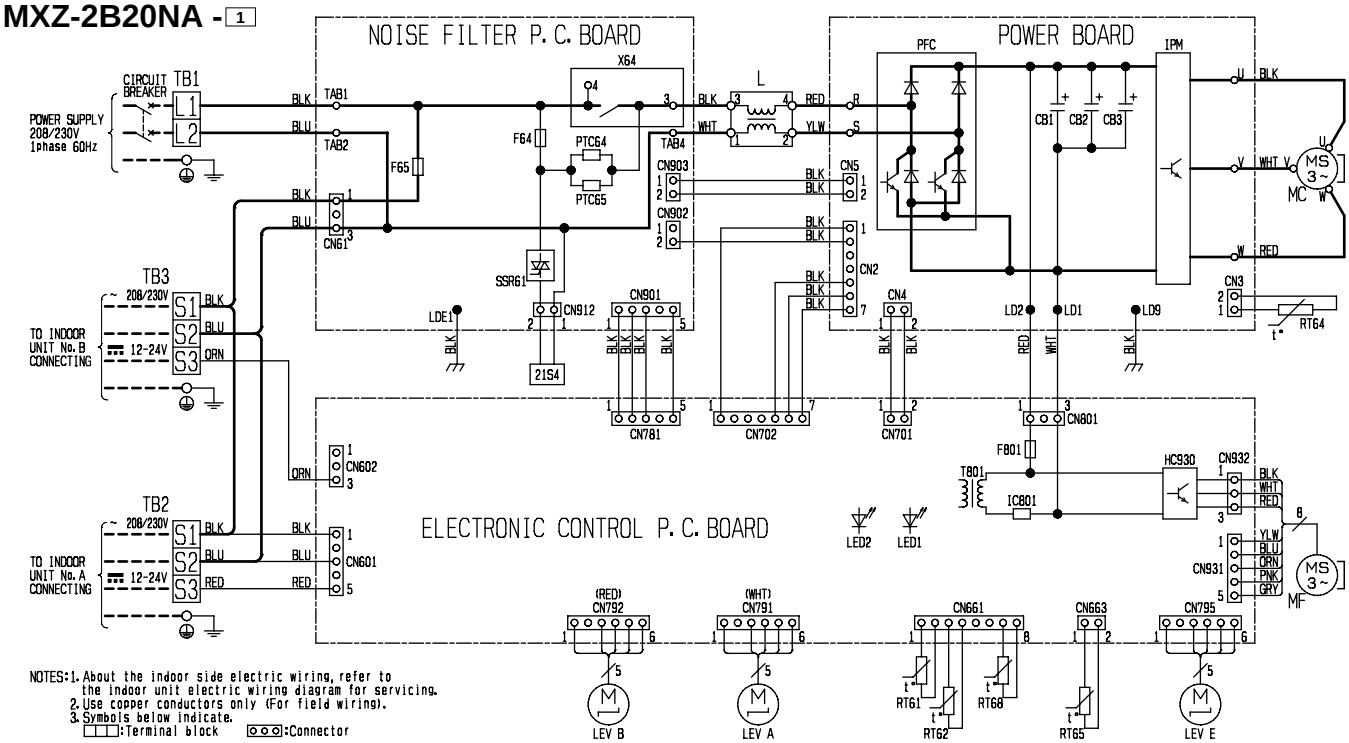

SYMBOL	NAME	SYMBOL	NAME	SYMBOL	NAME	SYMBOL	NAME	SYMBOL	NAME
CB1~3	SMOOTHING CAPACITOR	IPM	POWER MODULE	MF	FAN MOTOR	RT65	AMBIENT TEMP. THERMISTOR	21S4	REVERSING VALVE SOLENOID COIL
F64	FUSE (T2AL250V)	L	REACTOR	PFC	POWER FACTOR CONTROLLER	RT68	OUTDOOR HEAT EXCHANGER TEMP. THERMISTOR		
F65	FUSE (T6.3AL250V)	LED1, 2	LED	PTC64, 65	CIRCUIT PROTECTION	SSR61	SOLENOID COIL RELAY		
F801	FUSE (T3.15AL250V)	LEV A, B	EXPANSION VALVE	RT61	DEFROST THERMISTOR	T801	TRANSFORMER		
HC930	POWER MODULE	LEV E	EXPANSION VALVE	RT62	DISCHARGE TEMP. THERMISTOR	TB1~3	TERMINAL BLOCK		
IC801	POWER DEVICE	MC	COMPRESSOR	RT64	FIN TEMP. THERMISTOR	X64	RELAY		

MXZ-3B24NA
MXZ-3B30NA

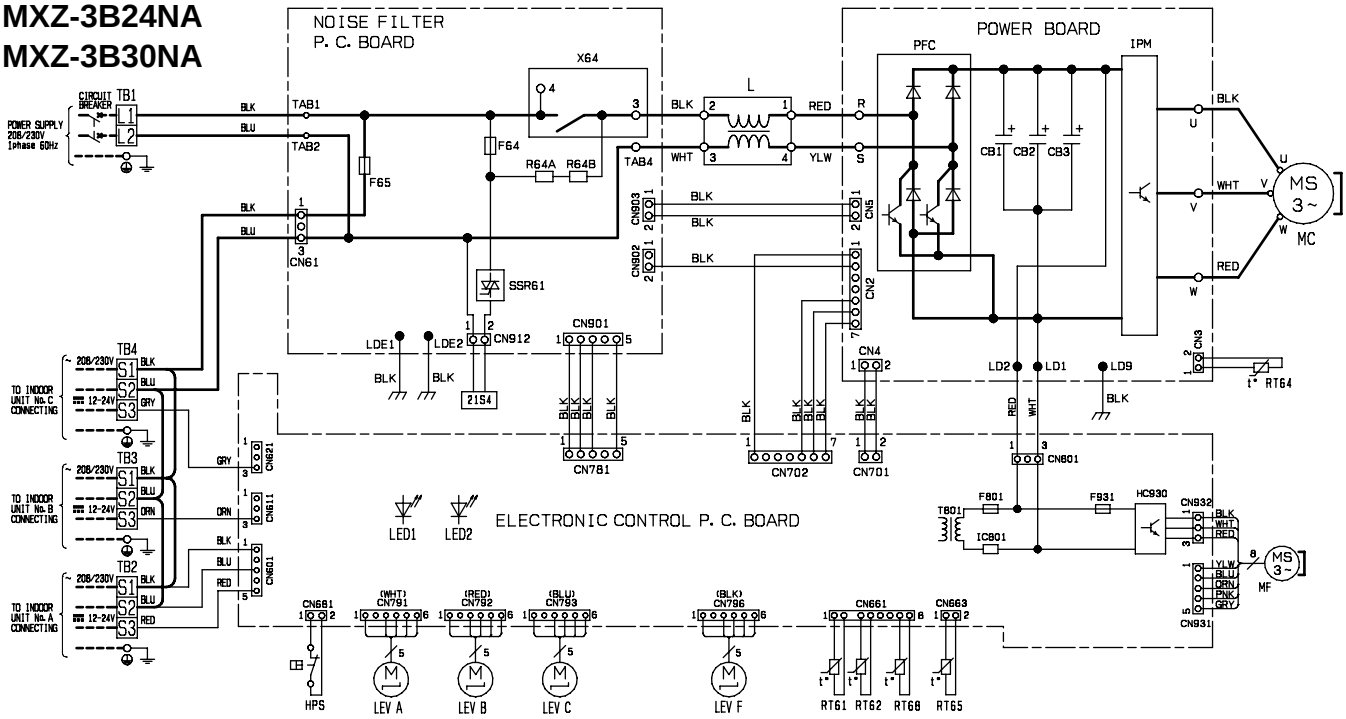

SYMBOL	NAME	SYMBOL	NAME	SYMBOL	NAME	SYMBOL	NAME	SYMBOL	NAME
CB1~3	SMOOTHING CAPACITOR	HPS	HIGH PRESSURE SWITCH	LEV F	EXPANSION VALVE	RT62	DISCHARGE TEMP. THERMISTOR	T801	TRANSFORMER
F64	FUSE (T2AL250V)	IPM	POWER MODULE	MC	COMPRESSOR	RT64	FIN TEMP. THERMISTOR	TB1~5	TERMINAL BLOCK
F65	FUSE (T6.3AL250V)	IC801	POWER DEVICE	MF	FAN MOTOR	RT65	AMBIENT TEMP. THERMISTOR	X64	RELAY
F801	FUSE (T3.15AL250V)	L	REACTOR	PFC	POWER FACTOR CONTROLLER	RT68	OUTDOOR HEAT EXCHANGER TEMPERATURE THERMISTOR	21S4	REVERSING VALVE SOLENOID COIL
F931	FUSE (T3.15AL250V)	LED 1,2	LED	R64A,B	RESISTOR				
HC930	POWER MODULE	LEV A~C	EXPANSION VALVE	RT61	DEFROST THERMISTOR	SSR61	SOLENOID COIL RELAY		

NOTES:
1. About the indoor side electric wiring, refer to the indoor unit electric wiring diagram for servicing.
2. Use copper conductors only (For field wiring).
3. Symbols below indicate.
   :Terminal block
   :connector

MXZ-4B36NA

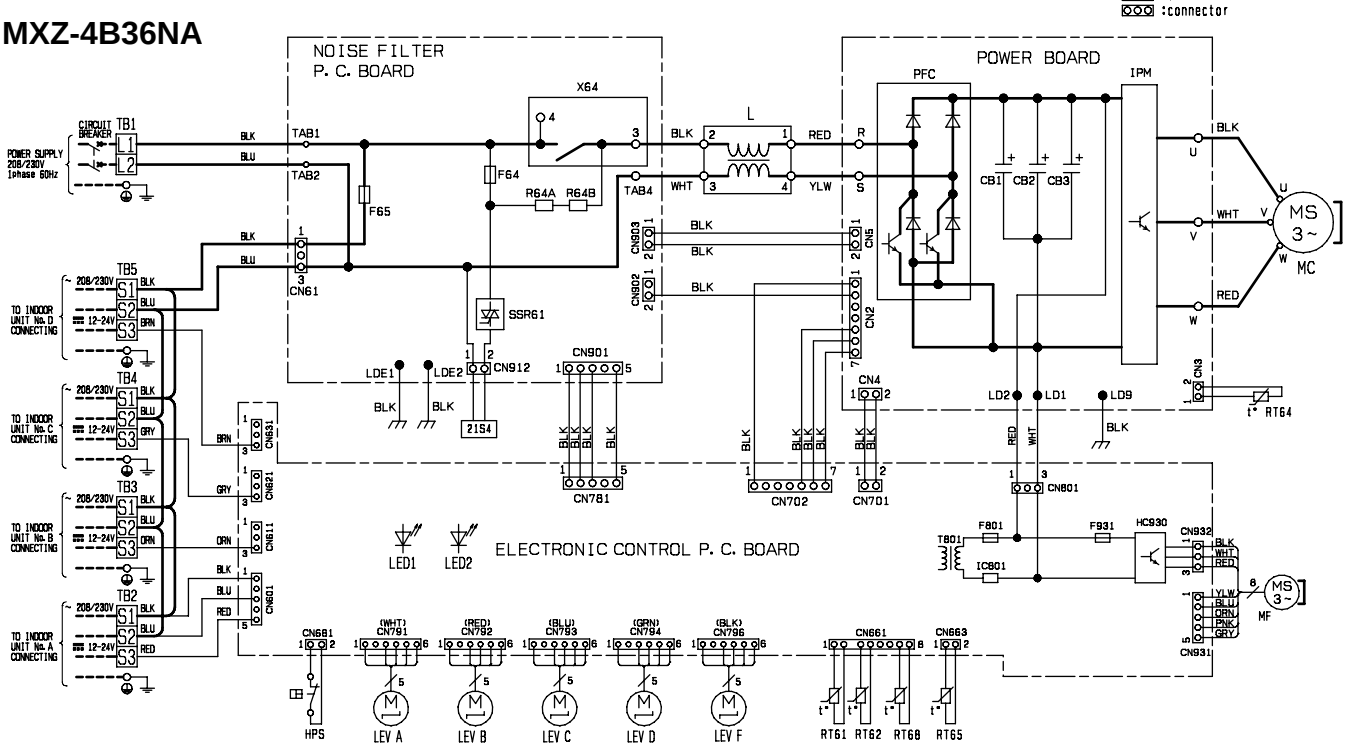

SYMBOL	NAME	SYMBOL	NAME	SYMBOL	NAME	SYMBOL	NAME	SYMBOL	NAME
CB1~3	SMOOTHING CAPACITOR	HPS	HIGH PRESSURE SWITCH	LEV F	EXPANSION VALVE	RT62	DISCHARGE TEMP. THERMISTOR	T801	TRANSFORMER
F64	FUSE (T2AL250V)	IC801	POWER DEVICE	MC	COMPRESSOR	RT64	FIN TEMP. THERMISTOR	TB1~5	TERMINAL BLOCK
F65	FUSE (T6.3AL250V)	IPM	POWER MODULE	MF	FAN MOTOR	RT65	AMBIENT TEMP. THERMISTOR	X64	RELAY
F801	FUSE (T3.15AL250V)	L	REACTOR	PFC	POWER FACTOR CONTROLLER	RT68	OUTDOOR HEAT EXCHANGER TEMPERATURE THERMISTOR	21S4	REVERSING VALVE SOLENOID COIL
F931	FUSE (T3.15AL250V)	LED 1,2	LED	R64A,B	RESISTOR				
HC930	POWER MODULE	LEV A~D	EXPANSION VALVE	RT61	DEFROST THERMISTOR	SSR61	SOLENOID COIL RELAY		

NOTES:
1. About the indoor side electric wiring, refer to the indoor unit electric wiring diagram for servicing.
2. Use copper conductors only (For field wiring).
3. Symbols below indicate.
   :Terminal block
   :connector

MXZ-3B24NA - 1
MXZ-3B30NA - 1

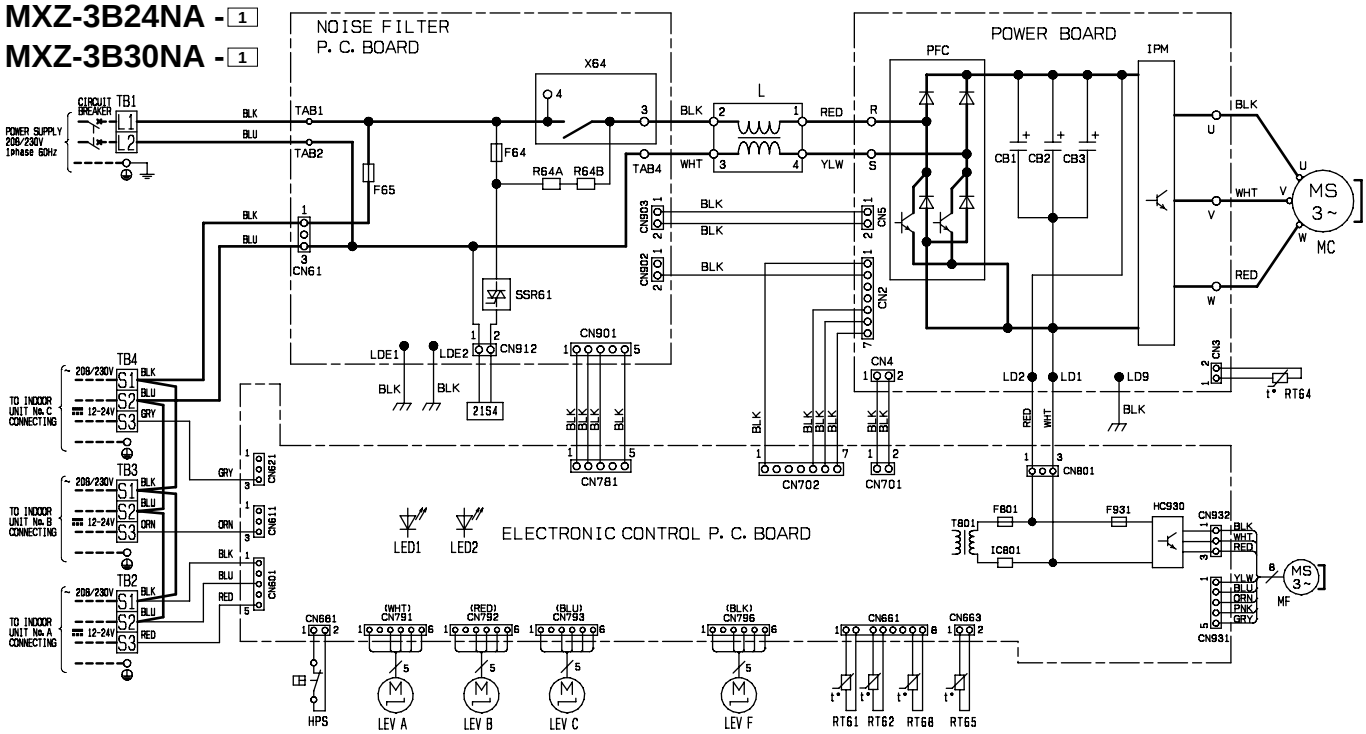

SYMBOL	NAME	SYMBOL	NAME	SYMBOL	NAME	SYMBOL	NAME	SYMBOL	NAME
CB1~3	SMOOTHING CAPACITOR	HPS	HIGH PRESSURE SWITCH	LEV F	EXPANSION VALVE	RT62	DISCHARGE TEMP. THERMISTOR	T801	TRANSFORMER
F64	FUSE (T2AL250V)	IPM	POWER MODULE	MC	COMPRESSOR	RT64	FIN TEMP. THERMISTOR	TB1~5	TERMINAL BLOCK
F65	FUSE (T6. 3AL250V)	IC801	POWER DEVICE	MF	FAN MOTOR	RT65	AMBIENT TEMP. THERMISTOR	X64	RELAY
F801	FUSE (T3. 15AL250V)	L	REACTOR	PFC	POWER FACTOR CONTROLLER	RT68	OUTDOOR HEAT EXCHANGER TEMPERATURE THERMISTOR	21S4	REVERSING VALVE SOLENOID COIL
F931	FUSE (T3. 15AL250V)	LED 1, 2	LED	R64A, B	RESISTOR				
HC930	POWER MODULE	LEV A~C	EXPANSION VALVE	RT61	DEFROST THERMISTOR	SSR61	SOLENOID COIL RELAY		

NOTES:
1. About the indoor side electric wiring refer to the indoor unit electric wiring diagram for servicing.
2. Use copper conductors only (For field wiring).
3. Symbols below indicate.
   □□□ :Terminal block
   ○○○ :connector

MXZ-4B36NA - 1

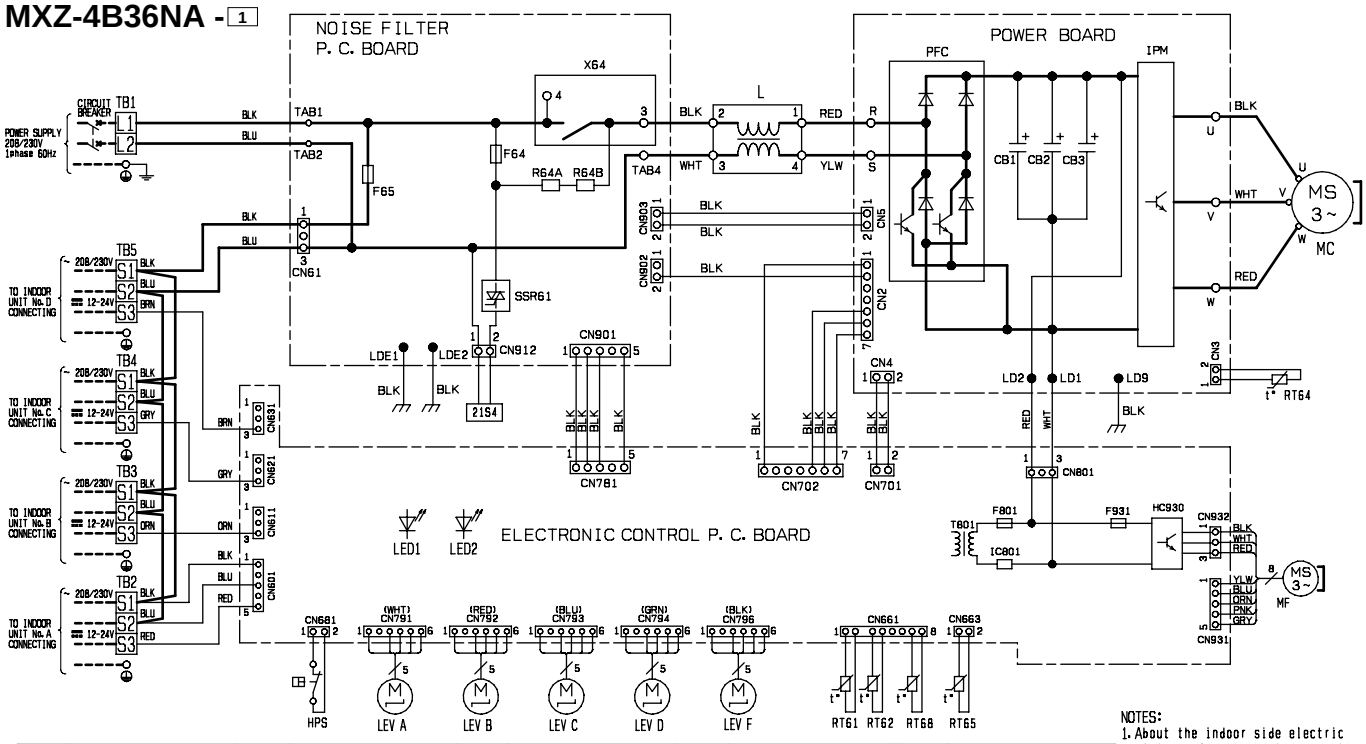

SYMBOL	NAME	SYMBOL	NAME	SYMBOL	NAME	SYMBOL	NAME	SYMBOL	NAME
CB1~3	SMOOTHING CAPACITOR	HPS	HIGH PRESSURE SWITCH	LEV F	EXPANSION VALVE	RT62	DISCHARGE TEMP. THERMISTOR	T801	TRANSFORMER
F64	FUSE (T2AL250V)	IC801	POWER DEVICE	MC	COMPRESSOR	RT64	FIN TEMP. THERMISTOR	TB1~5	TERMINAL BLOCK
F65	FUSE (T6. 3AL250V)	IPM	POWER MODULE	MF	FAN MOTOR	RT65	AMBIENT TEMP. THERMISTOR	X64	RELAY
F801	FUSE (T3. 15AL250V)	L	REACTOR	PFC	POWER FACTOR CONTROLLER	RT68	OUTDOOR HEAT EXCHANGER TEMPERATURE THERMISTOR	21S4	REVERSING VALVE SOLENOID COIL
F931	FUSE (T3. 15AL250V)	LED 1, 2	LED	R64A, B	RESISTOR				
HC930	POWER MODULE	LEV A~D	EXPANSION VALVE	RT61	DEFROST THERMISTOR	SSR61	SOLENOID COIL RELAY		

NOTES:
1. About the indoor side electric wiring refer to the indoor unit electric wiring diagram for servicing.
2. Use copper conductors only (For field wiring).
3. Symbols below indicate.
   □□□ :Terminal block
   ○○○ :connector

MXZ-5B42NA

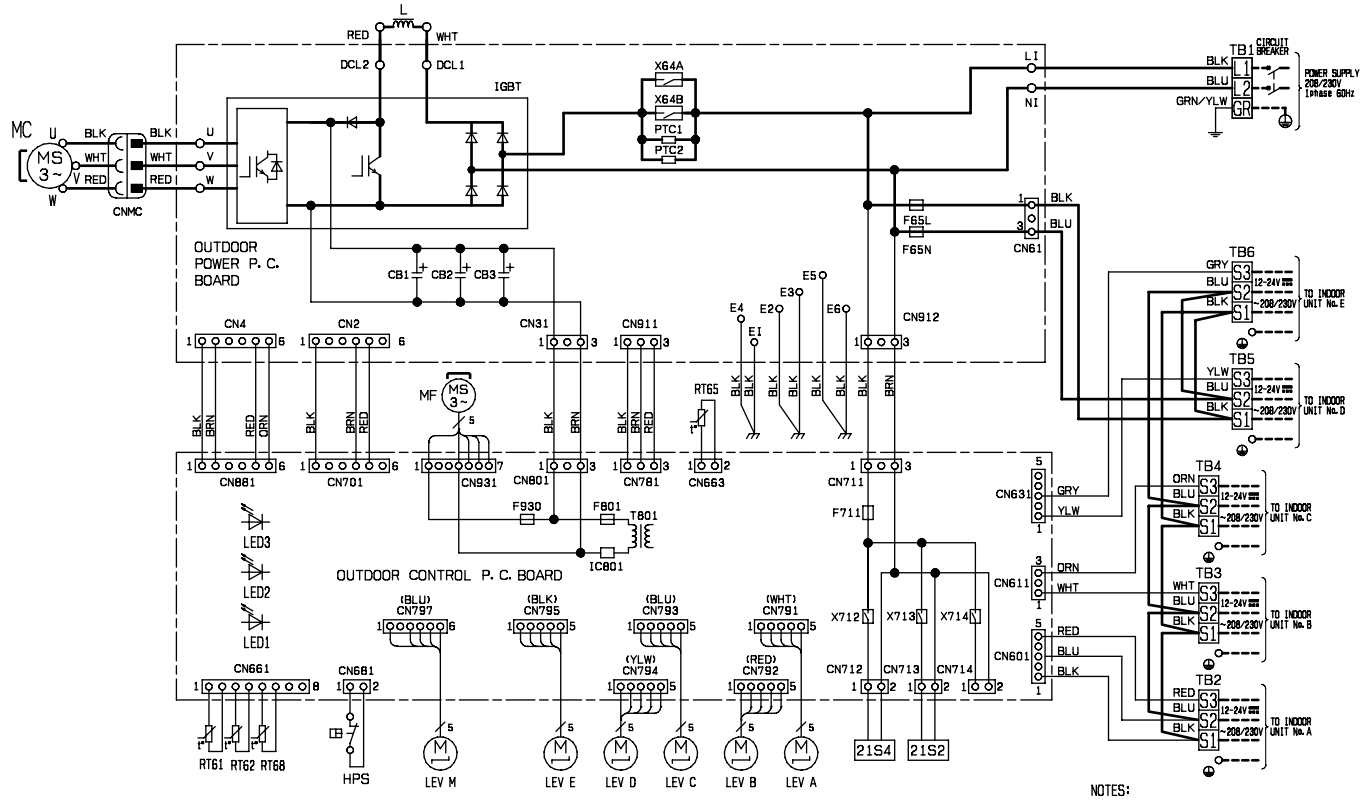

SYMBOL	NAME	SYMBOL	NAME	SYMBOL	NAME	SYMBOL	NAME	SYMBOL	NAME
CB1~3	SMOOTHING CAPACITOR	IC801	POWER DEVICE	MF	FAN MOTOR	T801	TRANSFORMER	21S4	REVERSING VALVE SOLENOID COIL
F65L	FUSE (T6. 3AL250V)	IGBT	POWER MODULE	PTC1, 2	CIRCUIT PROTECTION	TB1~6	TERMINAL BLOCK		
F65N	FUSE (T6. 3AL250V)	L	REACTOR	RT61	DEFROST THERMISTOR	X64A, B	RELAY		
F711	FUSE (T3. 15AL250V)	LED 1~3	LED	RT62	DISCHARGE TEMP. THERMISTOR	X712	RELAY		
F801	FUSE (T3. 15AL250V)	LEV A~E	EXPANSION VALVE	RT65	AMBIENT TEMP. THERMISTOR	X713	RELAY		
F930	FUSE (T3. 15AL250V)	LEV M	EXPANSION VALVE	RT68	OUTDOOR HEAT EXCHANGER TEMPERATURE THERMISTOR	X714	RELAY		
HPS	HIGH PRESSURE SWITCH	MC	COMPRESSOR			21S2	2WAY VALVE SOLENOIDE COIL		

NOTES:
1. About the indoor side electric wiring refer to the indoor unit electric wiring diagram for servicing.
2. Use copper conductors only (For field wiring).
3. Symbols below indicate.
   :Terminal block
   :connector

7 REFRIGERANT SYSTEM DIAGRAM

MXZ-2B20NA

Unit: inch

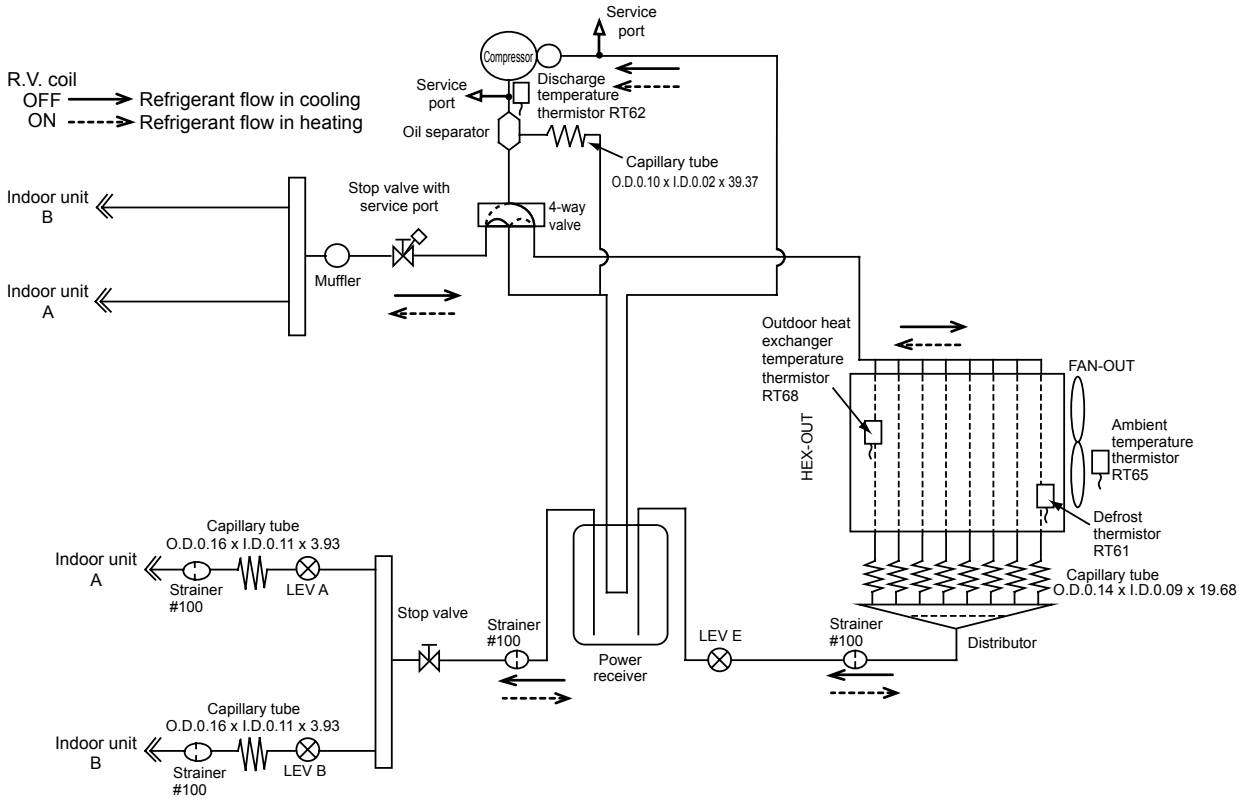

Operating Range **MXZ-2B20NA**

		Indoor intake air temperature	Outdoor intake air temperature
Cooling	Maximum	95°FDB, 71°FWB	115°FDB
	Minimum	67°FDB, 57°FWB	14°FDB
Heating	Maximum	80°FDB, 67°FWB	75°FDB, 65°FWB
	Minimum	70°FDB, 60°FWB	6°FDB, 5°FWB

MAX. REFRIGERANT PIPING LENGTH & PIPE SIZE SELECTION

MXZ-2B20NA

Piping length each indoor unit (a, b)	82 ft. MAX.
Total piping length (a+b)	164 ft. MAX.
Bending point for each unit	25 MAX.
Total bending point	50 MAX.

⁎It is irrelevant which unit is higher.

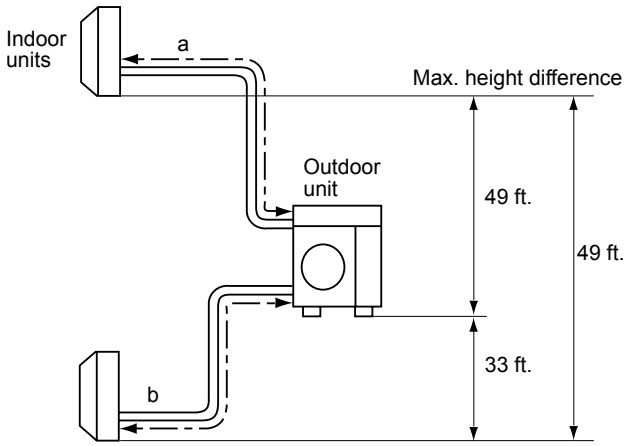

- Refrigerant pipe diameter is different according to indoor unit to be connected. When using extension pipes, refer to the tables below.
- When the diameter of refrigerant pipe is different from that of outdoor unit union, use optional Different-diameter pipe. For further information on Different-diameter pipe, see the appropriate parts catalog, Optional parts "DIFFERENT DIAMETER PIPE"(2-1.).

Unit: inch

Outdoor unit union diameter		
For		
Indoor unit A	Liquid	1/4
	Gas	3/8
Indoor unit B	Liquid	1/4
	Gas	3/8

MXZ-3B24NA
MXZ-3B30NA

Unit: inch

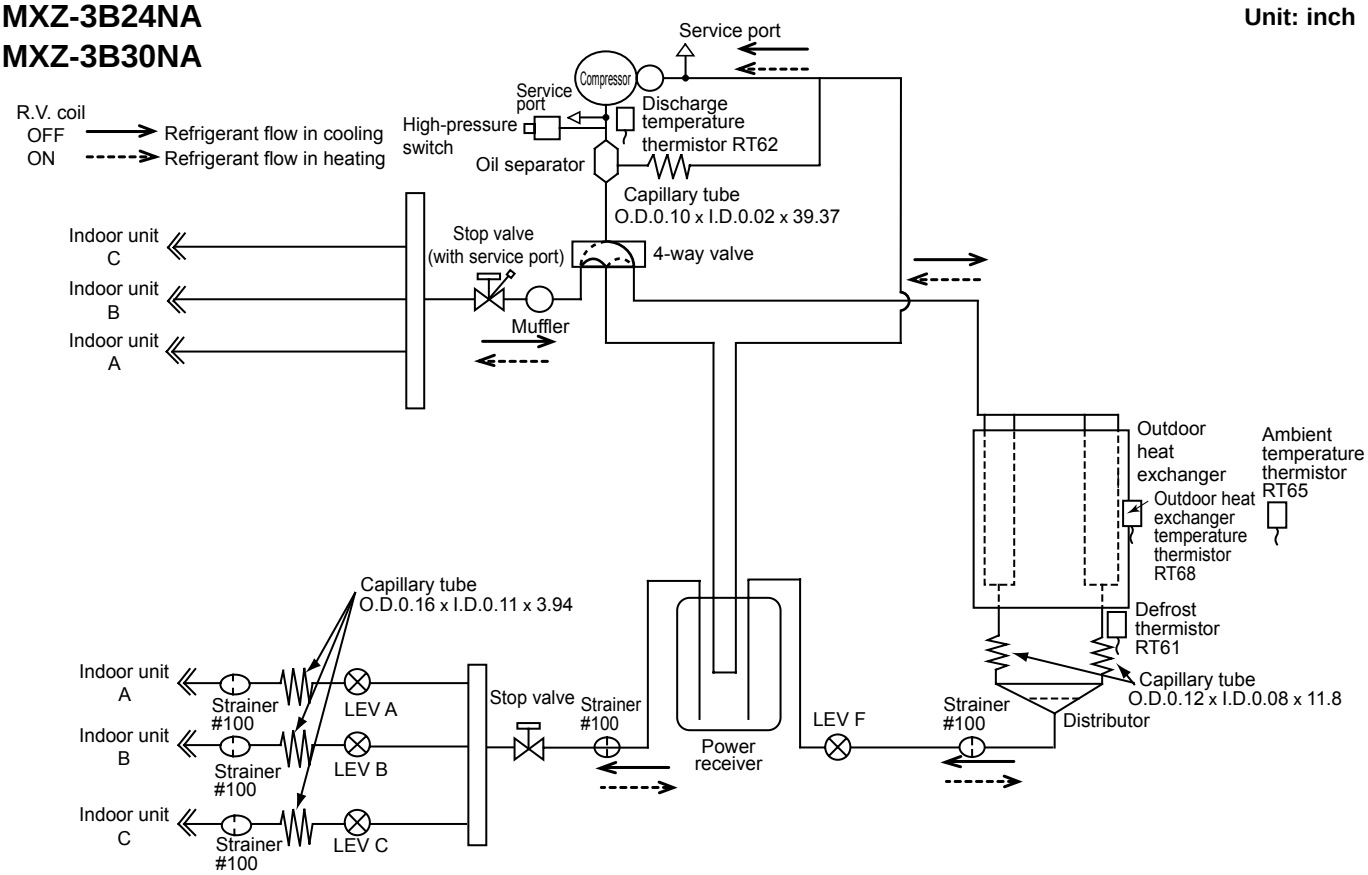

Operating Range **MXZ-3B24NA MXZ-3B30NA**

		Indoor intake air temperature	Outdoor intake air temperature
Cooling	Maximum	95°FDB, 71°FWB	115°FDB
	Minimum	67°FDB, 57°FWB	14°FDB
Heating	Maximum	80°FDB, 67°FWB	75°FDB, 65°FWB
	Minimum	70°FDB, 60°FWB	6°FDB, 5°FWB

MAX. REFRIGERANT PIPING LENGTH & PIPE SIZE SELECTION
MXZ-3B24NA MXZ-3B30NA

Piping length each indoor unit (a, b, c)	82 ft. MAX.
Total piping length (a+b+c)	230 ft. MAX.
Bending point for each unit	25 MAX.
Total bending point	70 MAX.

⁕It is irrelevant which unit is higher.

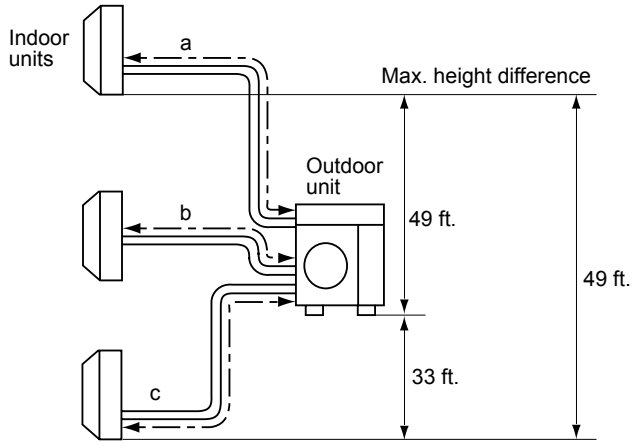

- Refrigerant pipe diameter is different according to indoor unit to be connected. When using extension pipes, refer to the tables below.
- When the diameter of refrigerant pipe is different from that of outdoor unit union, use optional Different-diameter pipe. For further information on Different-diameter pipe, see the appropriate parts catalog, Optional parts "DIFFERENT DIAMETER PIPE"(2-1.).

Unit : inch

Outdoor unit union diameter		
For		
Indoor unit A	Liquid	1/4
	Gas	1/2
Indoor unit B	Liquid	1/4
	Gas	3/8
Indoor unit C	Liquid	1/4
	Gas	3/8

MXZ-4B36NA

Unit: inch

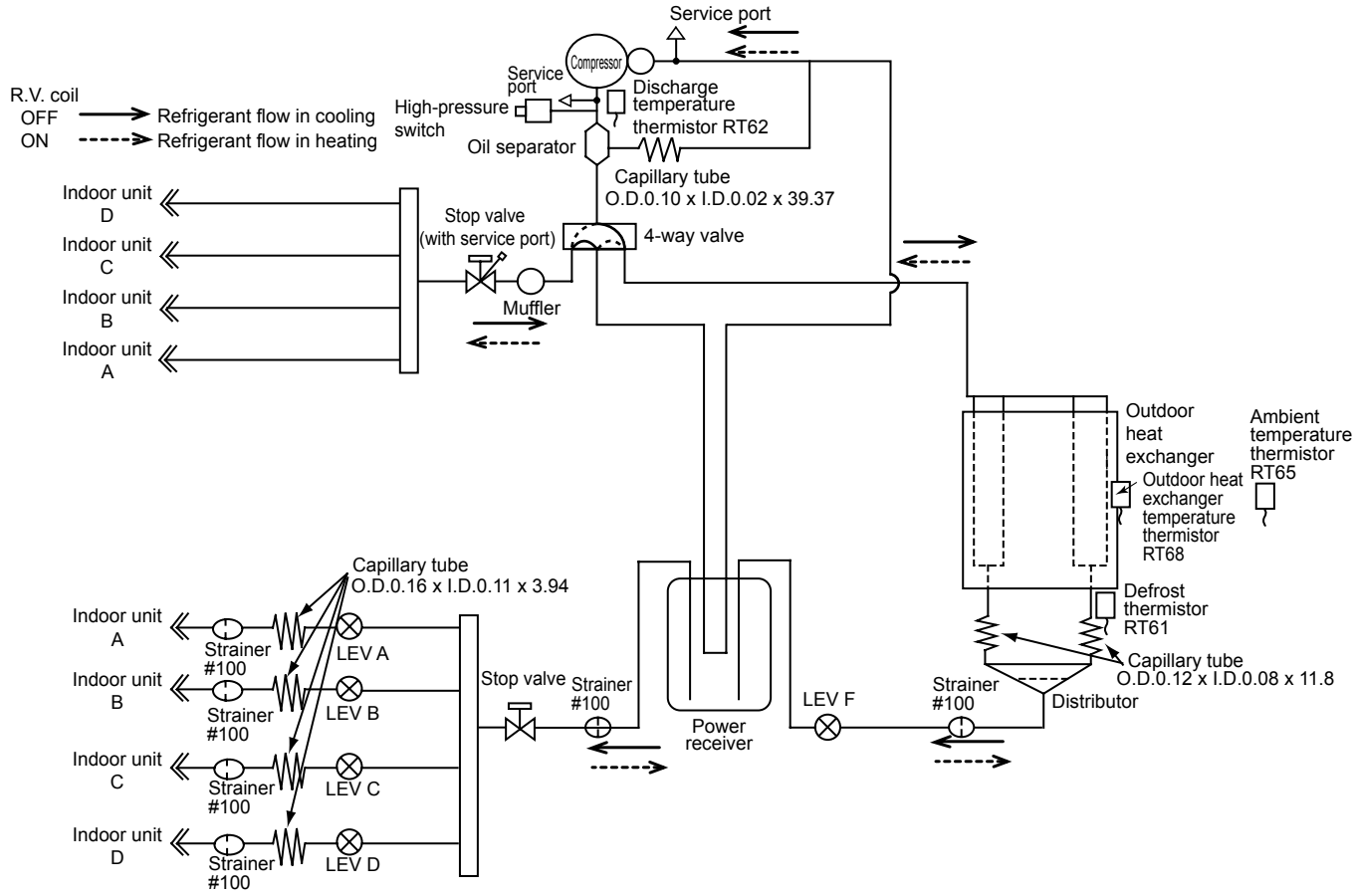

Operating Range **MXZ-4B36NA**

		Indoor intake air temperature	Outdoor intake air temperature
Cooling	Maximum	95°FDB, 71°FWB	115°FDB
	Minimum	67°FDB, 57°FWB	14°FDB
Heating	Maximum	80°FDB, 67°FWB	75°FDB, 65°FWB
	Minimum	70°FDB, 60°FWB	6°FDB, 5°FWB

MAX. REFRIGERANT PIPING LENGTH & PIPE SIZE SELECTION
MXZ-4B36NA

Piping length each indoor unit (a, b, c, d)	82 ft. MAX.
Total piping length (a+b+c+d)	230 ft. MAX.
Bending point for each unit	25 MAX.
Total bending point	70 MAX.

⁕It is irrelevant which unit is higher.

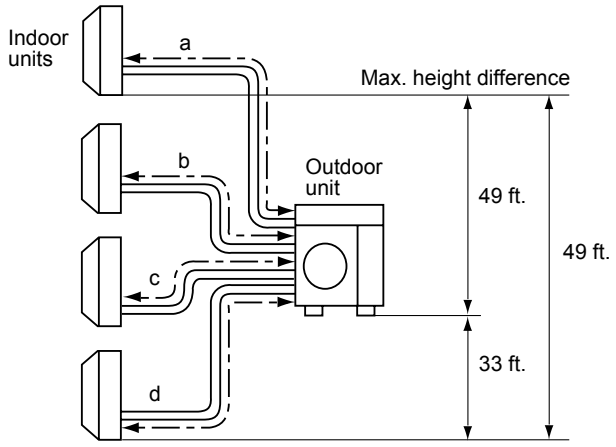

- Refrigerant pipe diameter is different according to indoor unit to be connected. When using extension pipes, refer to the tables below.
- When the diameter of refrigerant pipe is different from that of outdoor unit union, use optional Different-diameter pipe. For further information on Different-diameter pipe, see the appropriate parts catalog, Optional parts "DIFFERENT DIAMETER PIPE"(2-1.).

Unit : inch

Outdoor unit union diameter		
For		
Indoor unit A	Liquid	1/4
	Gas	1/2
Indoor unit B	Liquid	1/4
	Gas	3/8
Indoor unit C	Liquid	1/4
	Gas	3/8
Indoor unit D	Liquid	1/4
	Gas	3/8

MXZ-5B42NA

Unit: inch

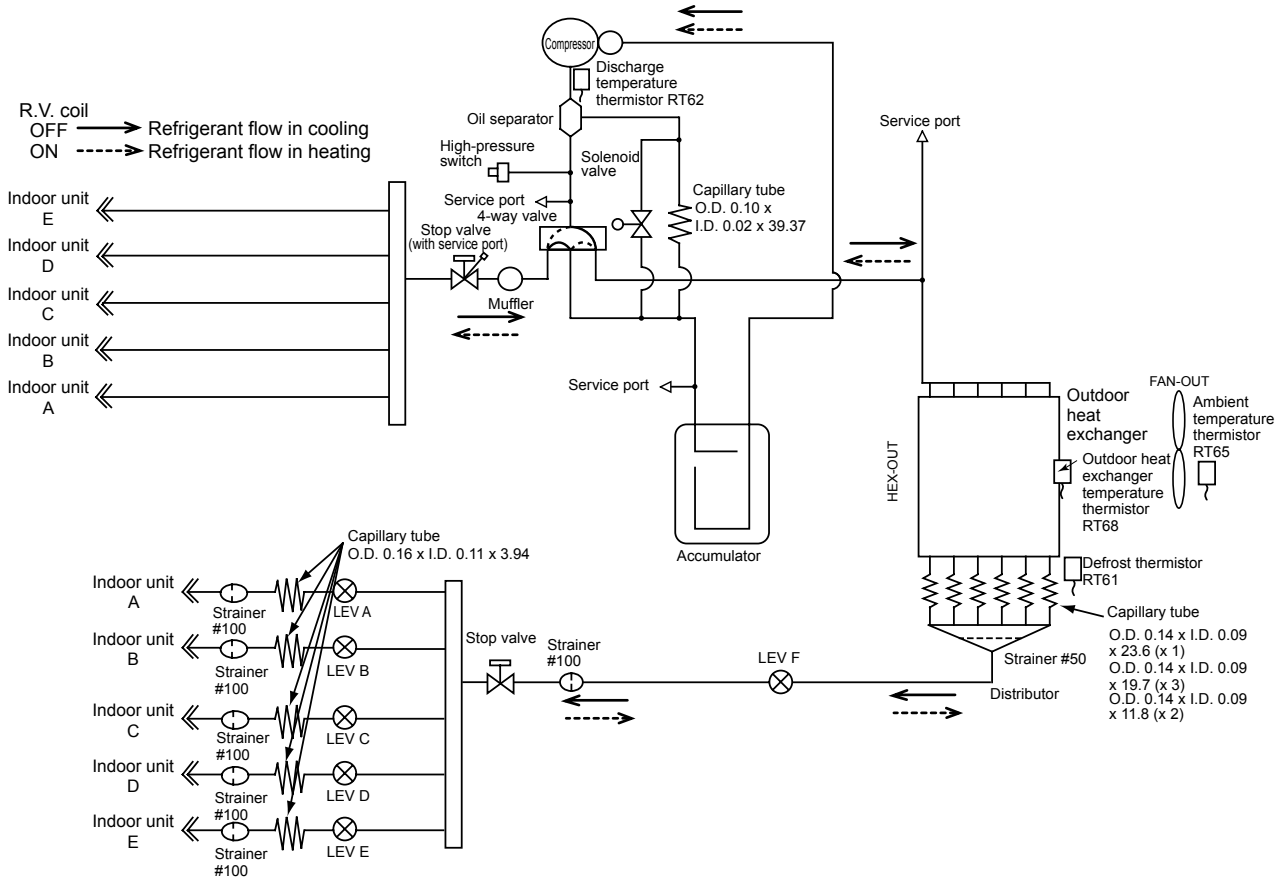

Operating Range **MXZ-5B42NA**

		Indoor intake air temperature	Outdoor intake air temperature
Cooling	Maximum	95°FDB, 71°FWB	115°FDB
	Minimum	67°FDB, 57°FWB	14°FDB
Heating	Maximum	80°FDB, 67°FWB	75°FDB, 65°FWB
	Minimum	70°FDB, 60°FWB	6°FDB, 5°FWB

MAX. REFRIGERANT PIPING LENGTH & PIPE SIZE SELECTION
MXZ-5B42NA

Piping length each indoor unit (a, b, c, d, e, f)	82 ft.
Total piping length (a+b+c+d+e+f)	262 ft.
Bending point for each unit	25
Total bending point	80

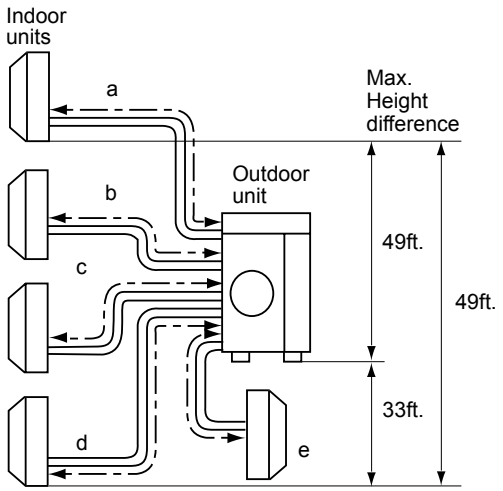

- Refrigerant pipe diameter is different according to indoor unit to be connected. When using extension pipes, refer to the tables below.
- When diameter of refrigerant pipe is different from that of outdoor unit union, use optional Different-diameter pipe. For further information on Different-diameter pipe, refer to "PARTS CATALOG".

Unit : inch

Outdoor unit union diameter		
For		
Indoor unit A	Liquid	1/4
	Gas	1/2
Indoor unit B	Liquid	1/4
	Gas	3/8
Indoor unit C	Liquid	1/4
	Gas	3/8
Indoor unit D	Liquid	1/4
	Gas	3/8
Indoor unit E	Liquid	1/4
	Gas	3/8

8 DATA

Model				MXZ-2B20NA			
Indoor type				Non-Duct (09+09)		Duct (09+12)	
Item			Unit	Cooling	Heating	Cooling	Heating
Total	Capacity		Btu/h	18,000	22,000	20,000	22,000
	SHF		–	–	–	–	–
	Input		kW	1.44	1.65	2.19	1.78
Electrical circuit	Power supply (V, phase, Hz)			208/230, 1, 60			
	Input		kW	1.396	1.604	2.06	1.69
	Comp. current (208/230V)		A	6.08/5.87	7.25/6.80	9.81/8.87	7.98/7.22
	Fan motor current		A	0.43/0.39	0.43/0.39	0.43/0.39	0.43/0.39
Refrigerant circuit	Condensing pressure		PSIG	411	319	417	350
	Suction pressure		PSIG	141	102	130	101
	Discharge temperature		ºF	169	154	174	172
	Condensing temperature		ºF	114	100	120	104
	Suction temperature		ºF	71	46	65	46
	Comp. shell bottom temp.		ºF	163	149	185	167
	Ref. pipe length [Total pipe length for multi-system]		ft	25 [50]			
	Refrigerant charge (R410A)		–	5 lb. 15 oz.			
Outdoor unit	Intake air temperature	DB	ºF	95	47	95	47
		WB	ºF	–	43	–	43
	Fan speed		rpm	650	700	650	700
	Airflow		CFM	1485	1640	1485	1640

Model				MXZ-3B24NA			
Indoor type				Non-Duct (06+06+09)		Duct (09+09+09)	
Item			Unit	Cooling	Heating	Cooling	Heating
Total	Capacity		Btu/h	22,000	25,000	23,600	24,600
	SHF		–	–	–	–	–
	Input		kW	1.76	1.75	2.46	1.9
Electrical circuit	Outdoor unit			MXZ-3B24NA			
	Power supply (V, phase, Hz)			208/230, 1, 60			
	Input		kW	1.694	1.681	2.28	1.78
	Comp. current (208/230V)		A	8.00/7.23	7.94/7.18	10.90/9.86	8.43/7.62
	Fan motor current		A	0.43/0.39	0.43/0.39	0.43/0.39	0.43/0.39
Refrigerant circuit	Condensing pressure		PSIG	394	296	408	324
	Suction pressure		PSIG	158	98	139	100
	Discharge temperature		ºF	173	153	167	164
	Condensing temperature		ºF	115	93	117	99
	Suction temperature		ºF	79	47	58	49
	Comp. shell bottom temp.		ºF	159	134	153	144
	Ref. pipe length [Total pipe length for multi-system]		ft	25[75]			
	Refrigerant charge (R410A)		–	7 lb.11 oz.			
Outdoor unit	Intake air temperature	DB	ºF	95	47	95	47
		WB	ºF	–	43	–	43
	Fan speed		rpm	750	600	750	600
	Airflow		CFM	2,068	1,605	2,068	1,605

Model				MXZ-3B30NA			
Indoor type				Non-Duct (09+09+12)		Duct (09+09+12)	
Item			Unit	Cooling	Heating	Cooling	Heating
Total	Capacity		Btu/h	28,400	28,600	27,400	27,600
	SHF		–	–	–	–	–
	Input		kW	3.12	2.15	3.33	2.22
Electrical circuit	Outdoor unit			MXZ-3B30NA			
	Power supply (V, phase, Hz)			208/230, 1, 60			
	Input		kW	3.047	2.081	3.14	2.09
	Comp. current (208/230V)		A	14.71/13.30	9.92/8.97	15.17/13.72	10.36/9.37
	Fan motor current		A	0.43/0.39	0.43/0.39	0.43/0.39	0.43/0.39
Refrigerant circuit	Condensing pressure		PSIG	489	313	496	325
	Suction pressure		PSIG	145	94	137	100
	Discharge temperature		ºF	208	155	203	168
	Condensing temperature		ºF	130	97	133	99
	Suction temperature		ºF	77	40	63	50
	Comp. shell bottom temp.		ºF	186	136	188	152
	Ref. pipe length [Total pipe length for multi-system]		ft	25[75]			
	Refrigerant charge (R410A)		–	7 lb.11 oz.			
Outdoor unit	Intake air temperature	DB	ºF	95	47	95	47
		WB	ºF	–	43	–	43
	Fan speed		rpm	520	600	520	600
	Airflow		CFM	1,365	1,605	1,365	1,605

Model				MXZ-4B36NA			
Indoor type				Non-Duct (09+09+09+09)		Duct (09+09+09+09)	
Item			Unit	Cooling	Heating	Cooling	Heating
Total	Capacity		Btu/h	35,400	36,000	34,400	34,400
	SHF		–	–	–	–	–
	Input		kW	3.76	3.02	3.94	3.1
Electrical circuit	Outdoor unit			MXZ-4B36NA			
	Power supply (V, phase, Hz)			208/230, 1, 60			
	Input		kW	3.672	2.928	3.62	2.86
	Comp. current (208/230V)		A	17.44/15.78	13.83/12.51	17.58/15.90	13.39/12.56
	Fan motor current		A	0.43/0.39	0.43/0.39	0.43/0.39	0.43/0.39
Refrigerant circuit	Condensing pressure		PSIG	485	309	455	347
	Suction pressure		PSIG	142	91	130	95
	Discharge temperature		ºF	198	139	202	163
	Condensing temperature		ºF	129	95	126	102
	Suction temperature		ºF	66	28	65	32
	Comp. shell bottom temp.		ºF	184	127	186	148
	Ref. pipe length [Total pipe length for multi-system]		ft	25[100]			
	Refrigerant charge (R410A)		–	8 lb.13 oz.			
Outdoor unit	Intake air temperature	DB	ºF	95	47	95	47
		WB	ºF	–	43	–	43
	Fan speed		rpm	750	750	750	750
	Airflow		CFM	2,068	2,068	2,068	2,068

Model				MXZ-5B42NA			
Indoor type				Non-Duct (06+09+09+09+09)		Duct (09+09+09+09+09)	
Item			Unit	Cooling	Heating	Cooling	Heating
Total	Capacity		Btu/h	40,800	45,200	37,200	41,200
	SHF		–	–	–	–	–
	Input		kW	4.80	3.78	3.96	3.66
Electrical circuit	Outdoor unit			MXZ-5B42NA			
	Power supply (V, phase, Hz)			208/230, 1, 60			
	Input		kW	4.69	3.67	3.71	3.26
	Comp. current (208/230V)		A	22.48/20.30	17.50/15.80	17.72/15.99	15.53/14.02
	Fan motor current		A	0.3	0.3	0.3	0.3
Refrigerant circuit	Condensing pressure		PSIG	479	312	450	406
	Suction pressure		PSIG	142	88	136	94
	Discharge temperature		ºF	169	135	167	140
	Condensing temperature		ºF	128	96	124	103
	Suction temperature		ºF	51	28	49	30
	Comp. shell bottom temp.		ºF	173	138	158	130
	Ref. pipe length [Total pipe length for multi-system]		ft	25[125]			
	Refrigerant charge (R410A)		–	10 lb. 9 oz.			
Outdoor unit	Intake air temperature	DB	ºF	95	47	95	47
		WB	ºF	–	43	–	43
	Fan speed		rpm	730	730	730	730
	Airflow		CFM	2,467	2,467	2,467	2,467

8-1. OPERATING RANGE

(1) POWER SUPPLY

	Model	Rating	Guaranteed Voltage
Outdoor unit	MXZ-2B20NA MXZ-3B24NA MXZ-3B30NA MXZ-4B36NA MXZ-5B42NA	208/230 V 60 Hz 1ϕ	Min. 198 V 208 V 230 V Max. 253 V

(2) OPERATION

Function	Condition \ Intake air temperature	Indoor		Outdoor	
		DB (°F)	WB (°F)	DB (°F)	WB (°F)
Cooling	"A" Cooling steady state at rated compressor speed	80	67	95	(75)
	"B-2" Cooling steady state at rated compressor speed	80	67	82	(65)
	"B-1" Cooling steady state at minimum compressor speed	80	67	82	(65)
	Low ambient cooling steady state at minimum compressor speed	80	67	67	(53.5)
	Intermediate cooling steady state at intermediate compressor speed	80	67	87	(69)
Heating	Standard rating-heating at rated compressor speed	70	60	47	43
	Low temperature heating at rated compressor speed	70	60	17	15
	Max. temperature heating at minimum compressor speed	70	60	62	56.5
	High temperature heating at minimum compressor speed	70	60	47	43
	Frost accumulation at rated compressor speed	70	60	35	33
	Frost accumulation at intermediate compressor speed	70	60	35	33

MXZ-2B20NA MXZ-3B24NA MXZ-3B30NA MXZ-4B36NA MXZ-5B42NA

The standard specifications apply only to the operation of the air conditioner under normal conditions.
Since operating conditions vary according to the areas where these units are installed, the following information has been provided to clarify the operating characteristics of the air conditioner under the conditions indicated by the performance curve.

(1) GUARANTEED VOLTAGE

198 ~ 253 V 60 Hz

(2) AIR FLOW

Air flow should be set at MAX.

(3) MAIN READINGS

(1) Indoor intake air wet-bulb temperature :	°FWB	Cooling
(2) Indoor outlet air wet-bulb temperature :	°FWB	Cooling
(3) Outdoor intake air dry-bulb temperature :	°FDB	Cooling
(4) Total input:	W	
(5) Indoor intake air dry-bulb temperature :	°FDB	Heating
(6) Outdoor intake air wet-bulb temperature :	°FWB	Heating
(7) Total input :	W	Heating

Indoor air wet and dry bulb temperature difference on the left side of the following chart shows the difference between the indoor intake air wet and dry bulb temperature and the indoor outlet air wet and dry bulb temperature for your reference at service.

How to measure the indoor air wet and dry bulb temperature difference

1. Attach at least 2 sets of wet and dry bulb thermometers to the indoor air intake as shown in the figure, and at least 2 sets of wet and dry bulb thermometers to the indoor air outlet. The thermometers must be attached to the position where air speed is high.
2. Attach at least 2 sets of wet and dry bulb thermometers to the outdoor air intake.
   Cover the thermometers to prevent direct rays of the sun.
3. Check that the air filter is cleaned.
4. Open windows and doors of room.
5. Press the EMERGENCY OPERATION switch once (twice) to start the EMERGENCY COOL (HEAT) MODE.
6. Compressor starts running at 33 Hz (COOL) or 45 Hz (HEAT). The frequency at each operation mode is fixed.
7. When system stabilizes after more than 15 minutes, measure temperature and take an average temperature.
8. 10 minutes later, measure temperature again and check that the temperature does not change.

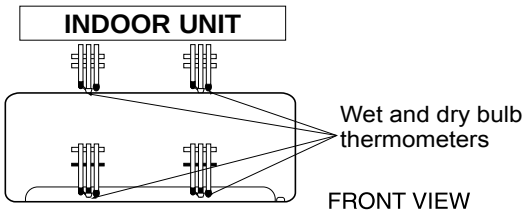

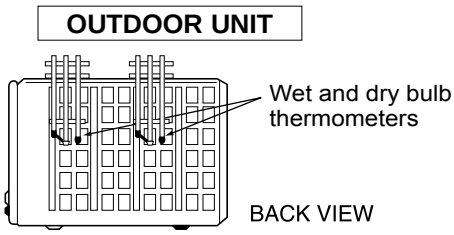

8-2. CAPACITY AND THE INPUT CURVES
MXZ-2B20NA

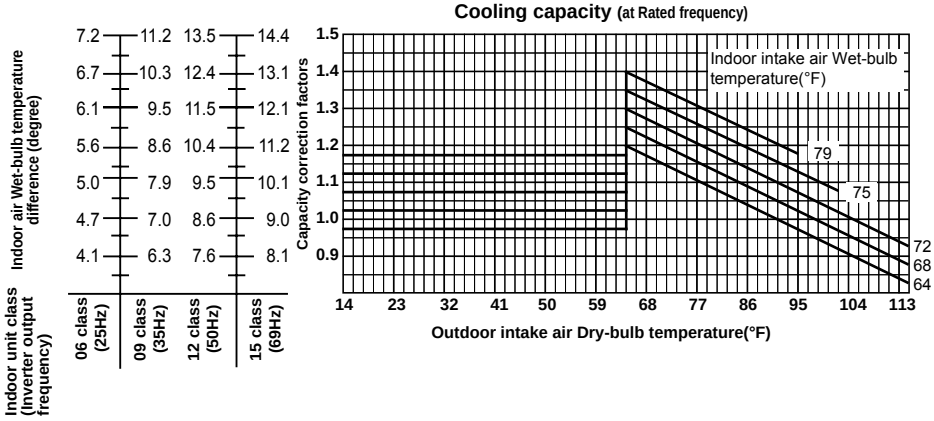

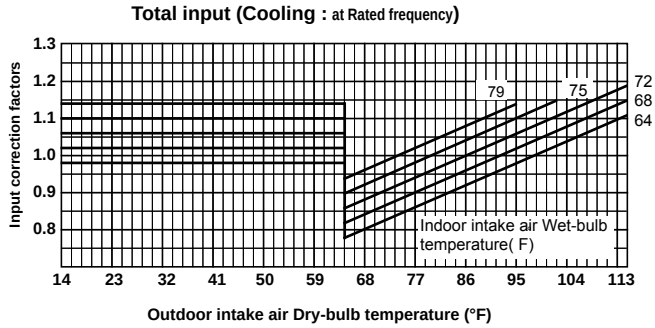

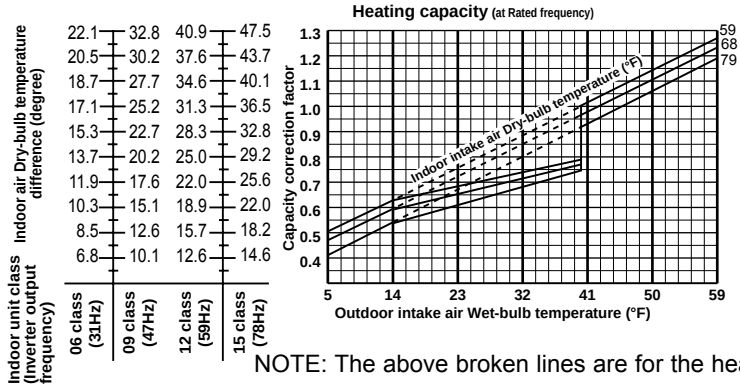

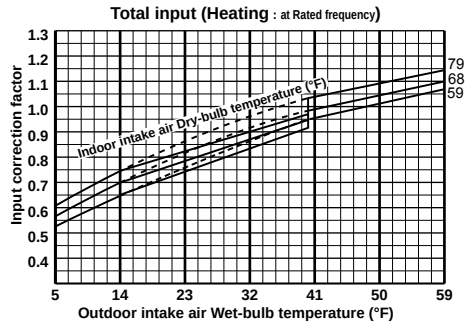

NOTE: The above broken lines are for the heating operation without any frost and defrost operation.

MXZ-3B24NA MXZ-3B30NA MXZ-4B36NA

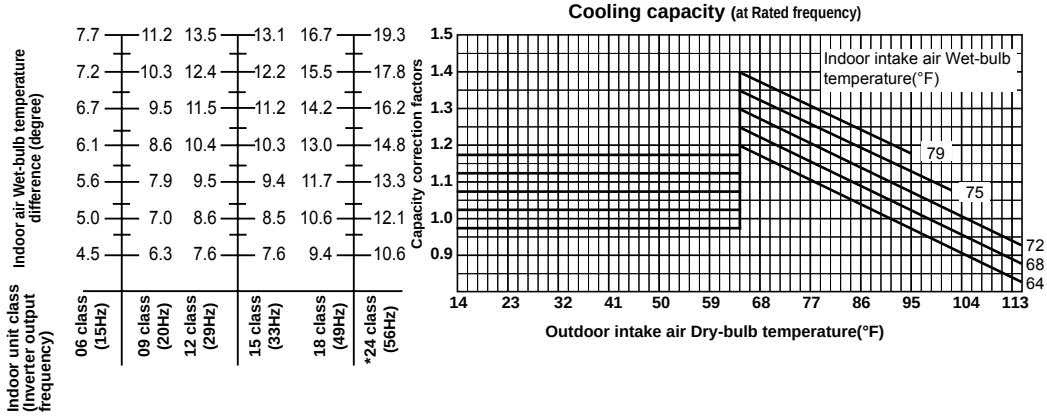

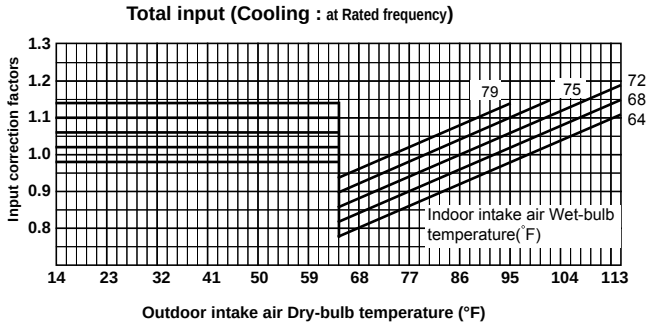

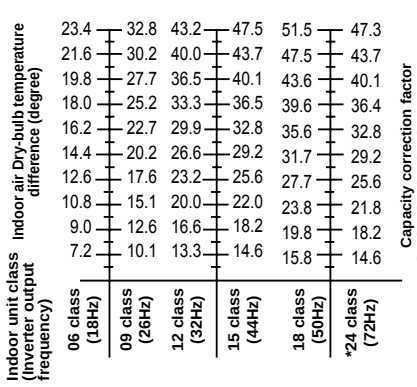

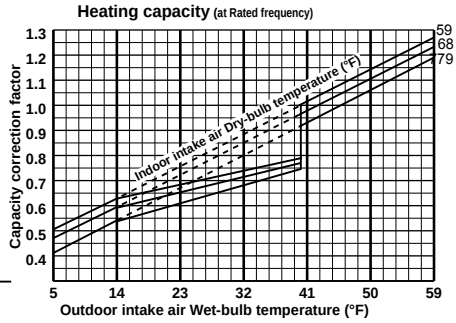

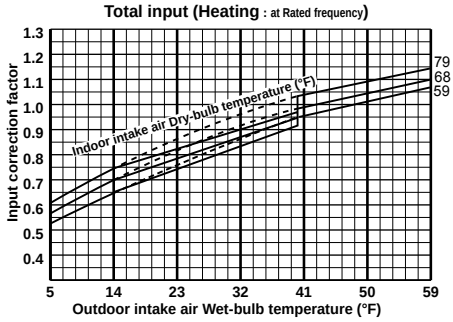

* MXZ-3B30/4B36NA only

NOTE: The above broken lines are for the heating operation without any frost and defrost operation.

MXZ-5B42NA

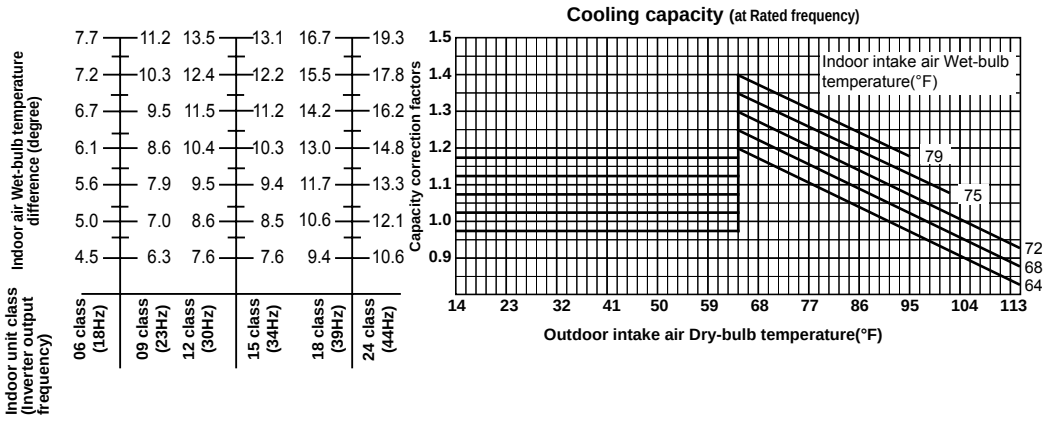

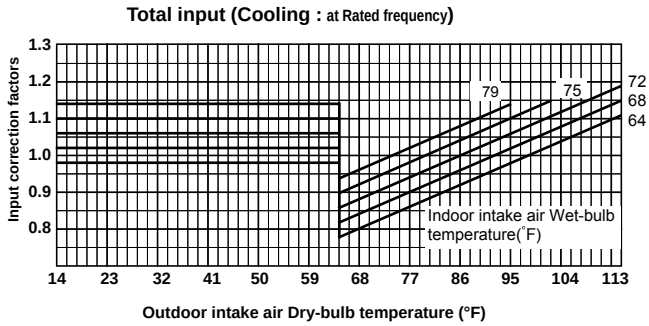

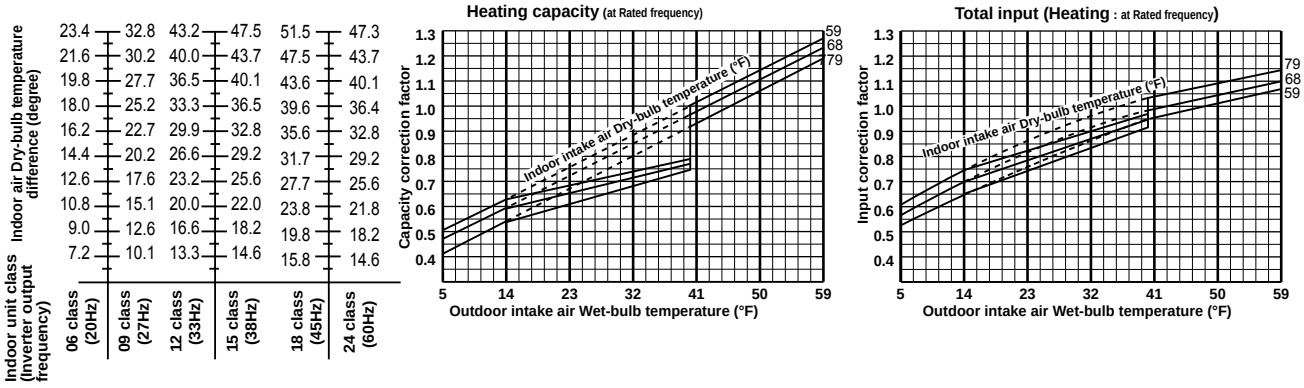

NOTE: The above broken lines are for the heating operation without any frost and defrost operation.

8-3. CAPACITY AND INPUT CORRECTION BY MEANS OF INVERTER OUTPUT FREQUENCY
(OUTDOOR UNIT: MXZ-2B20NA)

1. 06-class unit in single operation

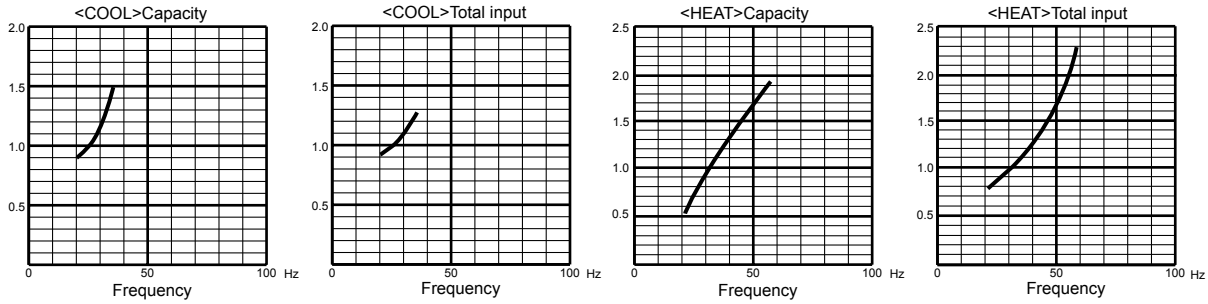

2. 09-class unit in single operation

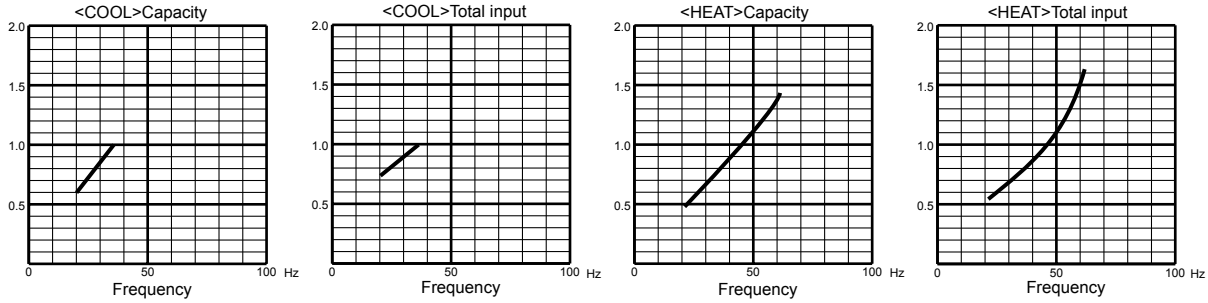

3. 12-class unit in single operation

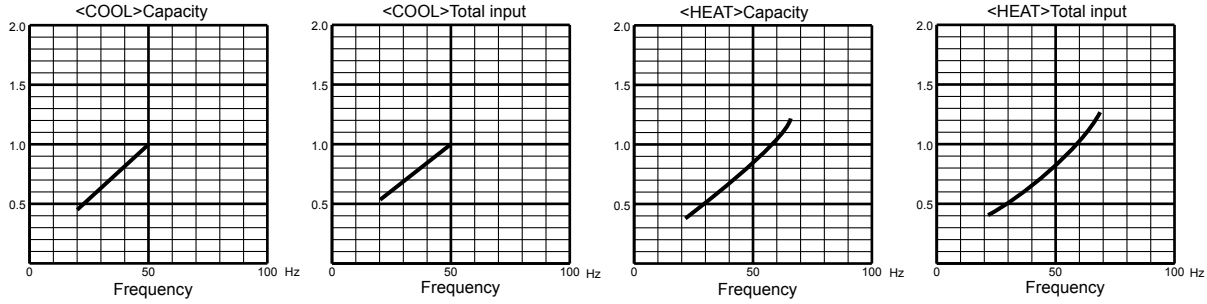

4. 15-class unit in single operation

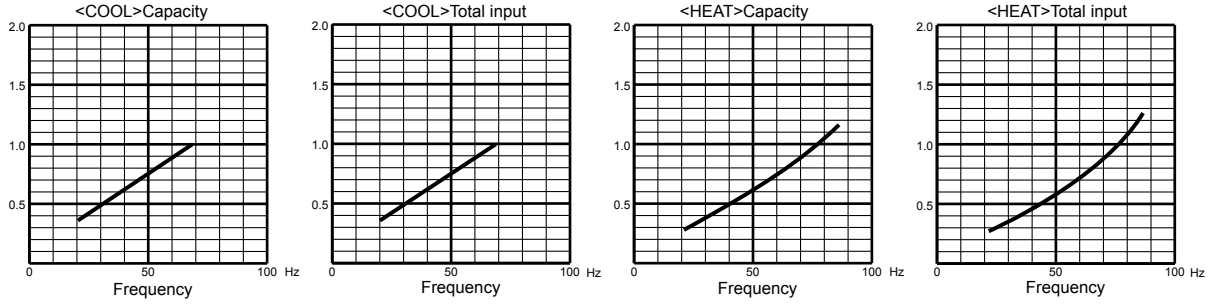

(OUTDOOR UNIT: MXZ-3B24NA MXZ-3B30NA MXZ-4B36NA)

1. 06-class unit in single operation

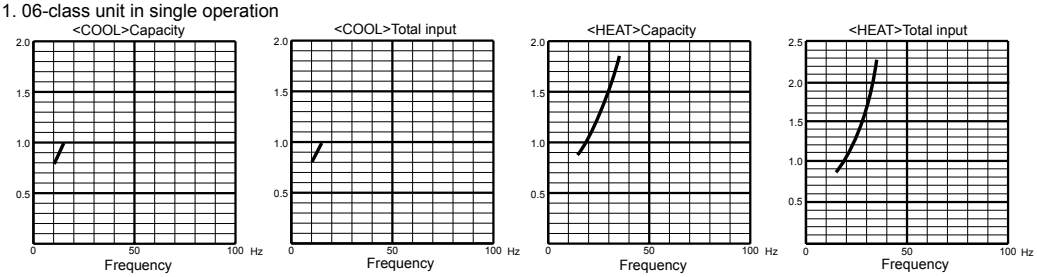

2. 09-class unit in single operation

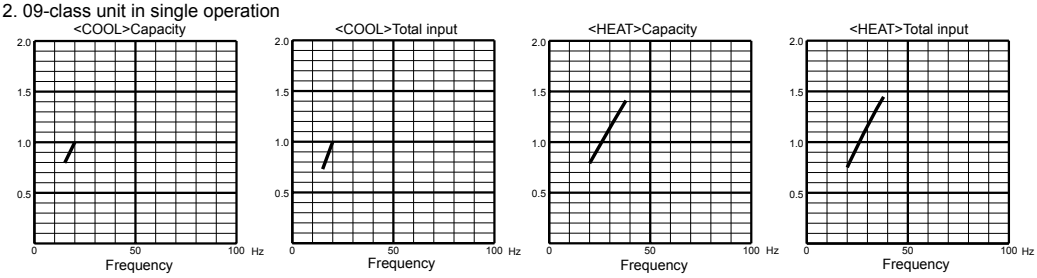

3. 12-class unit in single operation

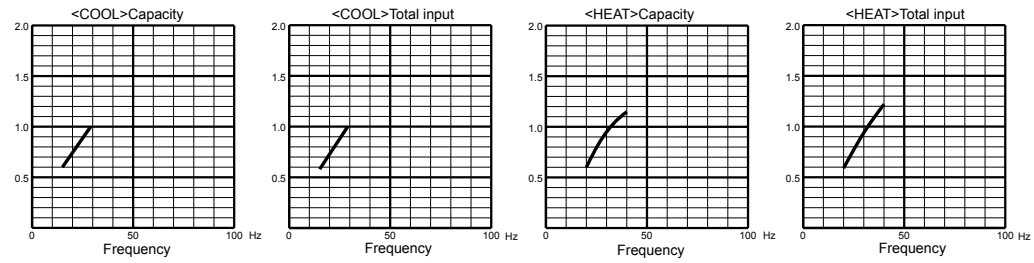

4. 15-class unit in single operation

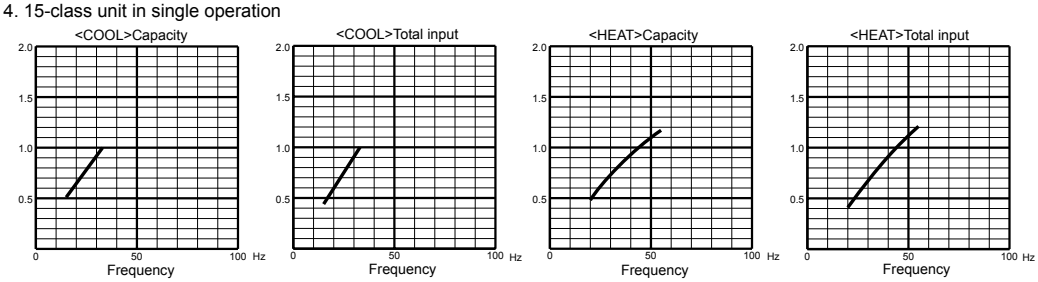

5. 18-class unit in single operation

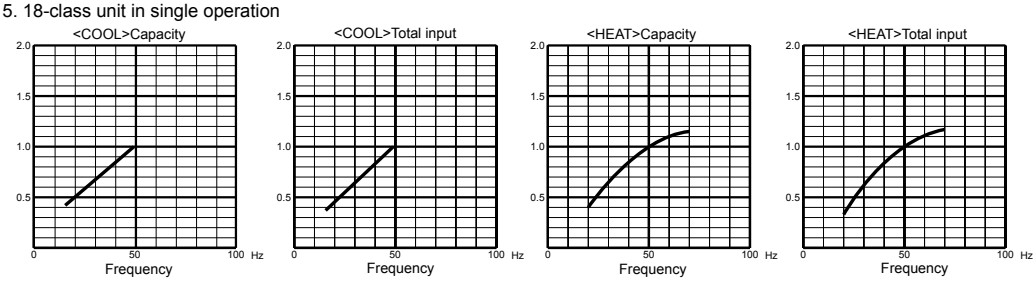

6. 24-class unit in single operation **(MXZ-3B30/4B36NA only)**

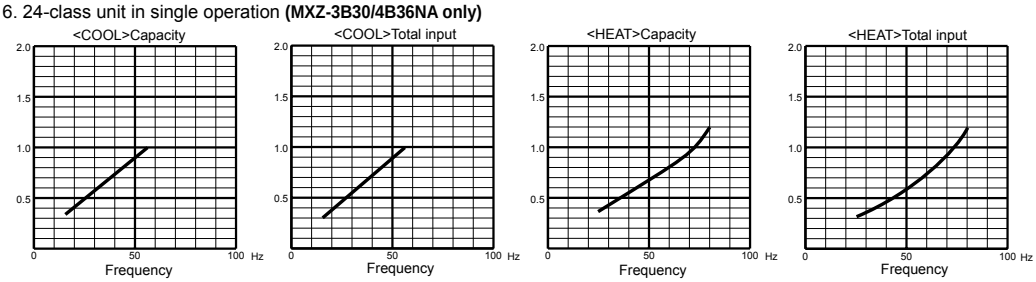

(OUTDOOR UNIT: MXZ-5B42NA)

1. 06-class unit in single operation

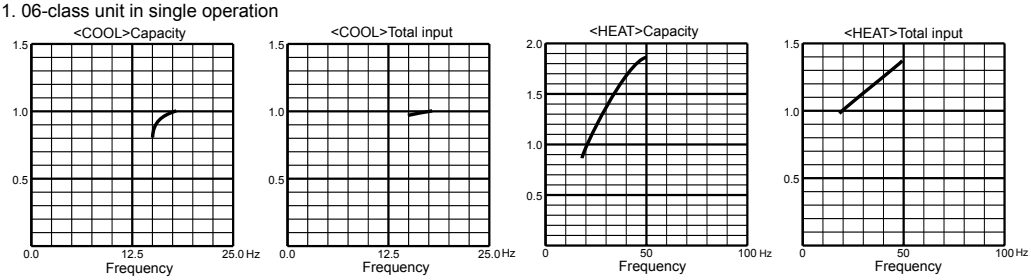

2. 09-class unit in single operation

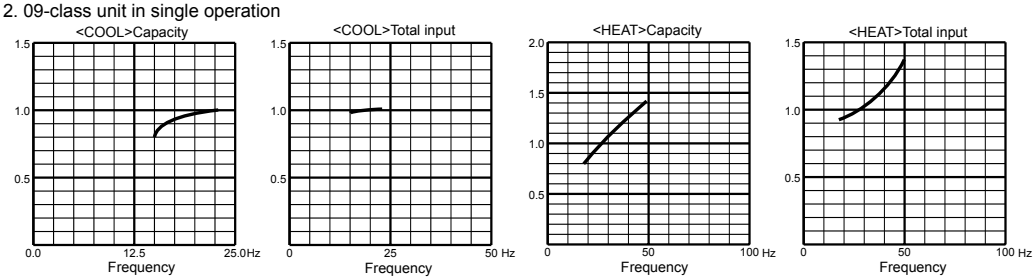

3. 12-class unit in single operation

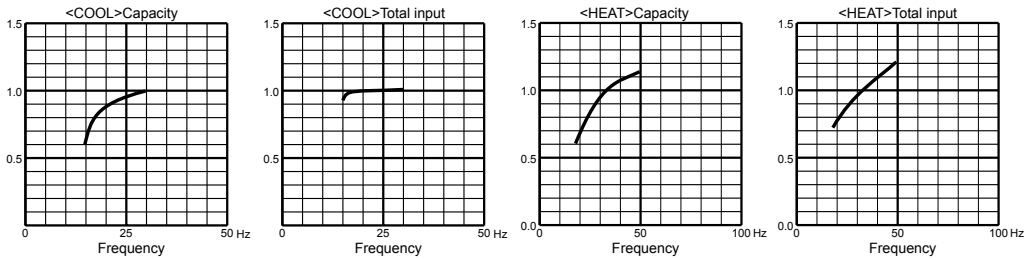

4. 15-class unit in single operation

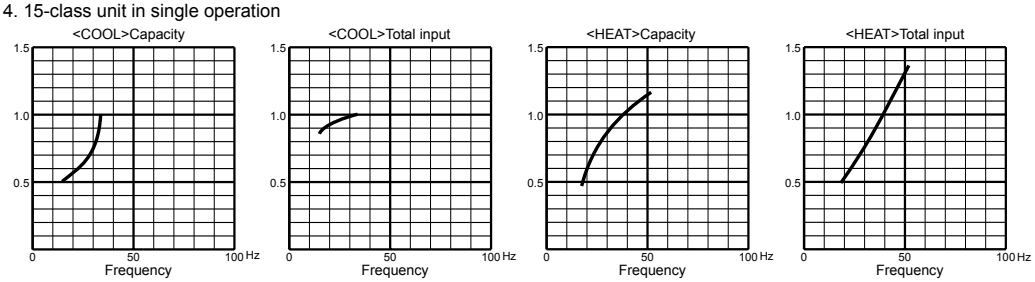

5. 18-class unit in single operation

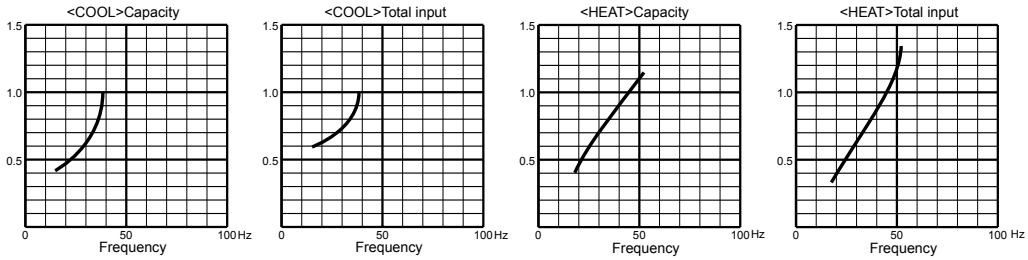

6. 24-class unit in single operation

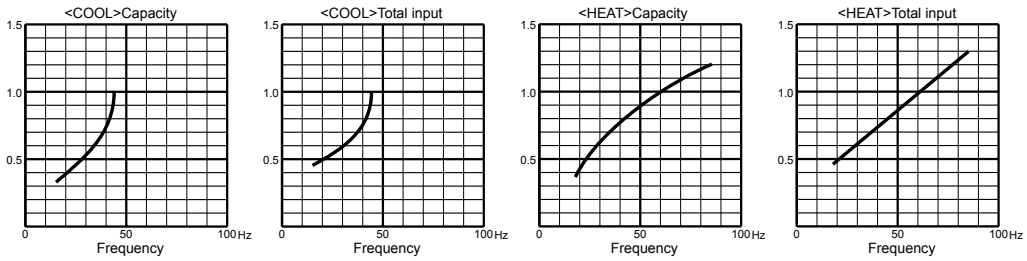

8-4. OUTDOOR LOW PRESSURE AND OUTDOOR UNIT CURRENT

1. 06-class unit in single operation (OUTDOOR UNIT: MXZ-2B20NA)

(1) COOL operation

① Data is based on the condition of indoor humidity 50%
② Air flow speed: High
③ Inverter output frequency: 40 Hz

<How to work fixed-frequency operation>
1. Set emergency switch to COOL or HEAT. The switch is located on indoor unit.
2. Press emergency run ON/OFF button.
3. Compressor starts running at 40 Hz (COOL) or 48 Hz (HEAT).
4. Indoor fan runs at High speed and continues for 30 minutes.
5. To cancel this operation, press emergency run ON/OFF button or any button on remote controller.

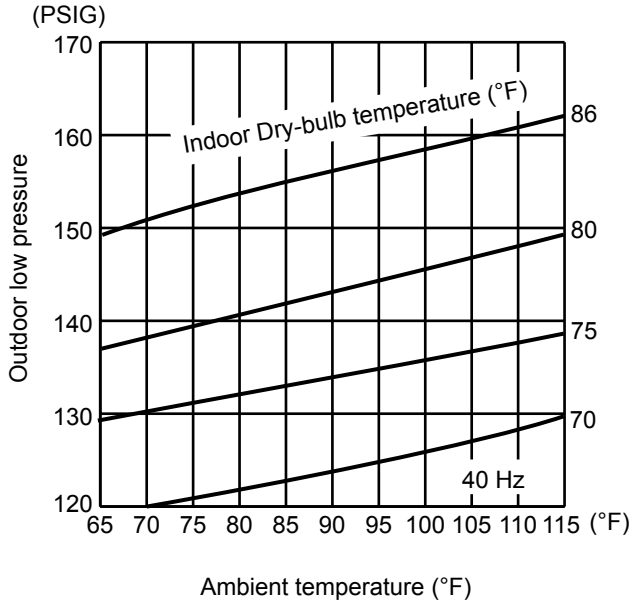

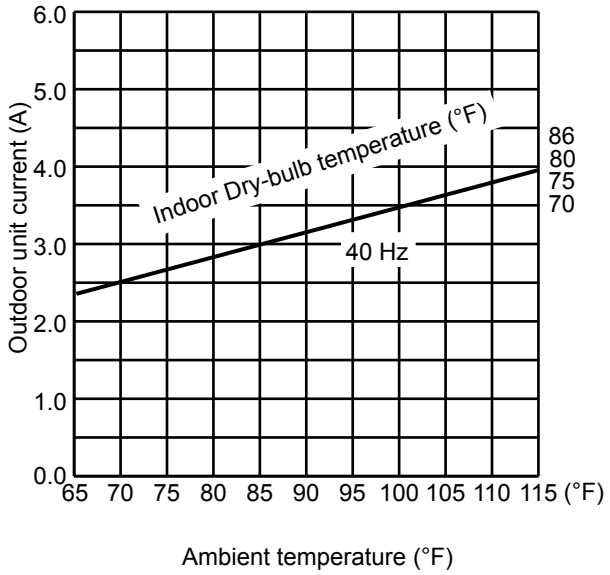

(2) HEAT operation

① Data is based on the condition of indoor humidity 75%
② Set air flow to High speed.
③ Inverter output frequency is 48 Hz.

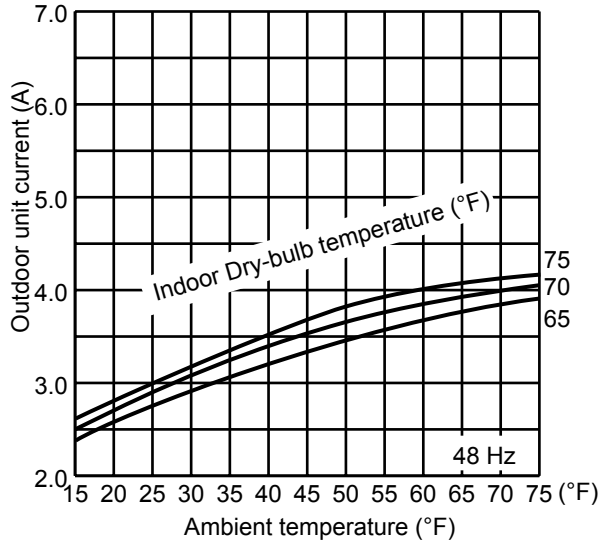

2. 09-class unit in single operation (OUTDOOR UNIT: MXZ-2B20NA)

(1) COOL operation

① Data is based on the condition of indoor humidity 50%
② Air flow speed: High
③ Inverter output frequency: 40 Hz

<How to work fixed-frequency operation>
1. Set emergency switch to COOL or HEAT. The switch is located on indoor unit.
2. Press emergency run ON/OFF button.
3. Compressor starts running at 40 Hz (COOL) or 48 Hz (HEAT).
4. Indoor fan runs at High speed and continues for 30 minutes.
5. To cancel this operation, press emergency run ON/OFF button or any button on remote controller.

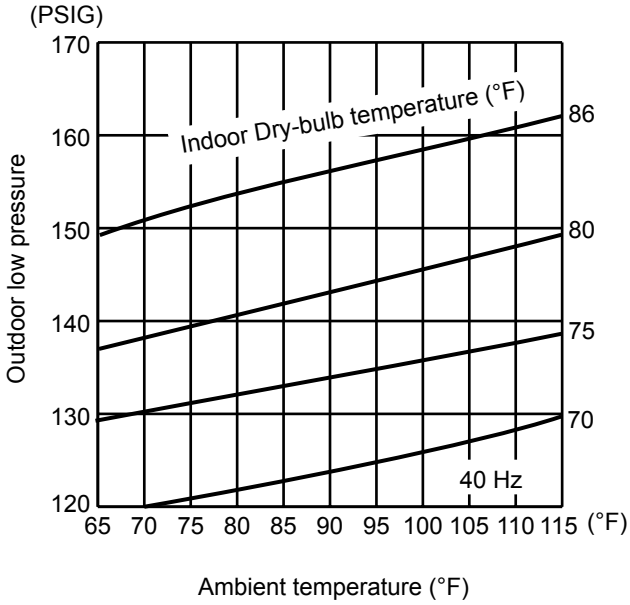

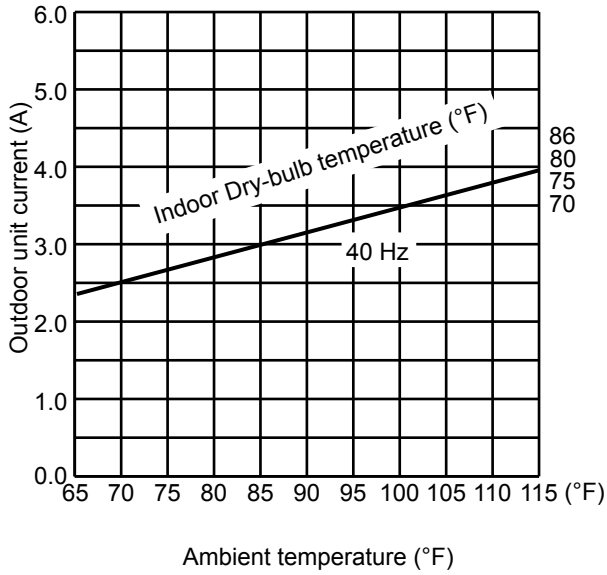

(2) HEAT operation

① Data is based on the condition of indoor humidity 75%
② Set air flow to High speed.
③ Inverter output frequency is 48 Hz.

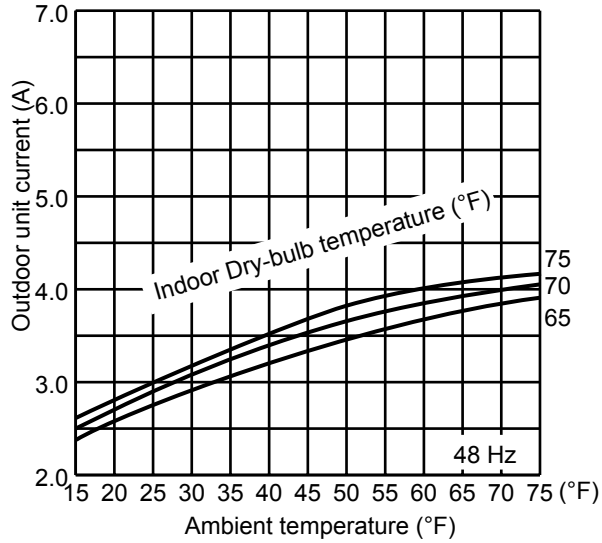

3. 12-class unit in single operation (OUTDOOR UNIT: MXZ-2B20NA)

(1) COOL operation

① Data is based on the condition of indoor humidity 50%
② Air flow speed: High
③ Inverter output frequency: 40 Hz

<How to work fixed-frequency operation>
1. Set emergency switch to COOL or HEAT. The switch is located on indoor unit.
2. Press emergency run ON/OFF button.
3. Compressor starts running at 40 Hz (COOL) or 48 Hz (HEAT).
4. Indoor fan runs at High speed and continues for 30 minutes.
5. To cancel this operation, press emergency run ON/OFF button or any button on remote controller.

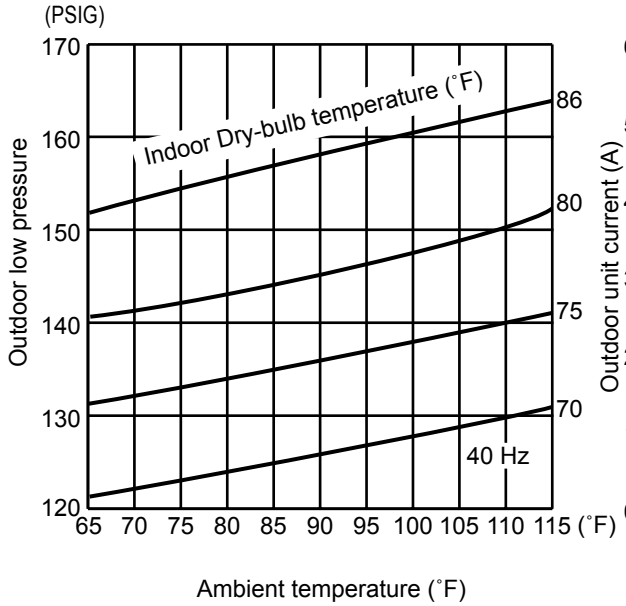

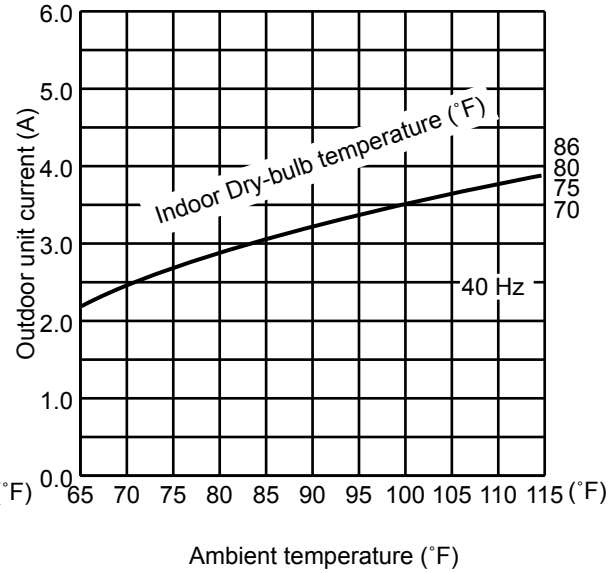

(2) HEAT operation

① Data is based on the condition of indoor humidity 75%
② Set air flow to High speed.
③ Inverter output frequency is 48 Hz.

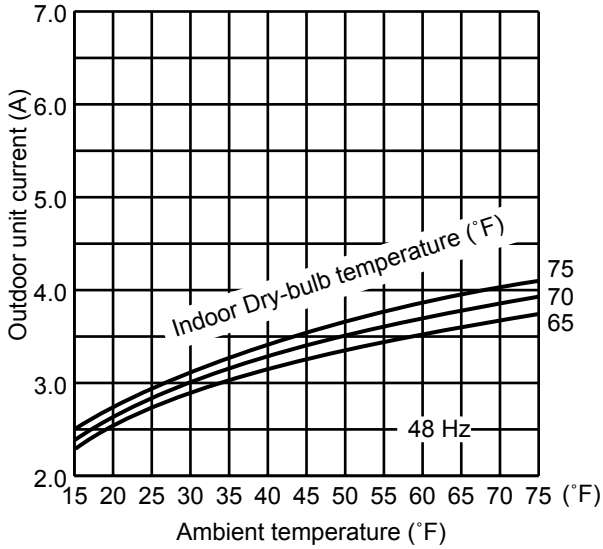

4. 15-class unit in single operation (OUTDOOR UNIT: MXZ-2B20NA)

(1) COOL operation

① Data is based on the condition of indoor humidity 50%
② Air flow speed: High
③ Inverter output frequency: 40 Hz

<How to work fixed-frequency operation>
1. Set emergency switch to COOL or HEAT. The switch is located on indoor unit.
2. Press emergency run ON/OFF button.
3. Compressor starts running at 40 Hz (COOL) or 48 Hz (HEAT).
4. Indoor fan runs at High speed and continues for 30 minutes.
5. To cancel this operation, press emergency run ON/OFF button or any button on remote controller.

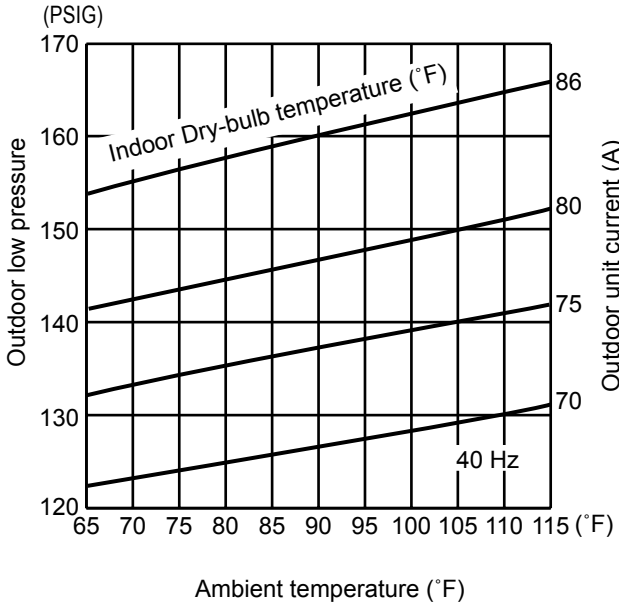

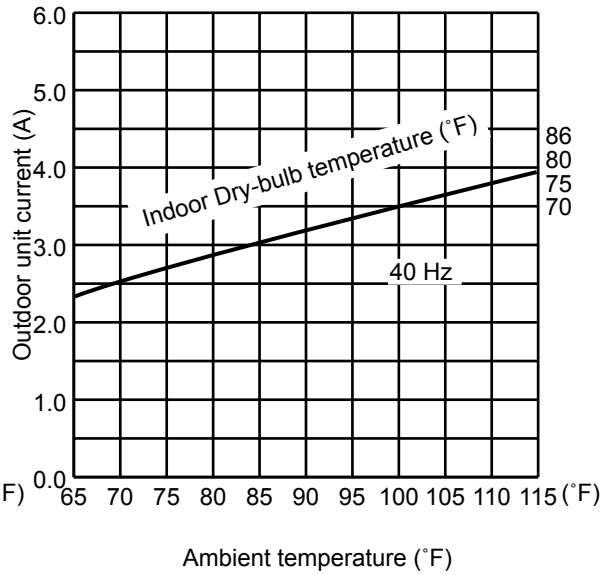

(2) HEAT operation

① Data is based on the condition of indoor humidity 75%
② Set air flow to High speed.
③ Inverter output frequency is 48 Hz.

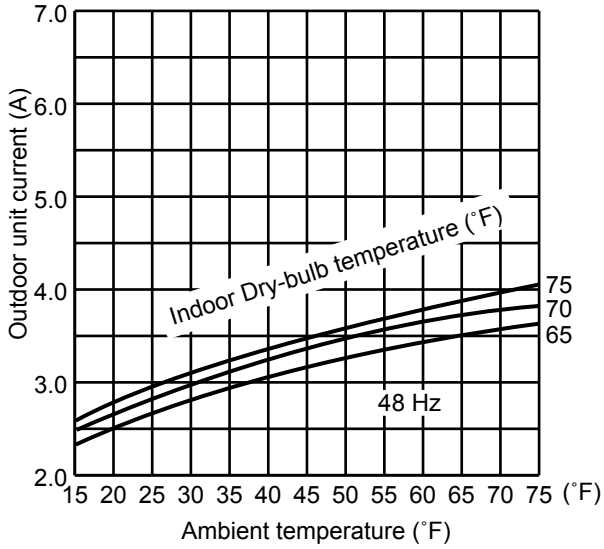

5. 06-class unit in single operation (OUTDOOR UNIT : MXZ-3B24NA MXZ-3B30NA MXZ-4B36NA)

(1) COOL operation

①Data is based on the condition of indoor humidity 50%

②Air flow speed : High

③Inverter output frequency : 24 Hz

<How to work fixed-frequency operation>

1. Set emergency switch to COOL or HEAT. The switch is located on indoor unit.
2. Press emergency run ON/OFF button.
3. Compressor starts running at 24 Hz (COOL) or 32 Hz (HEAT).
4. Indoor fan runs at High speed and continues for 30 minutes.
5. To cancel this operation, press emergency run ON/OFF button or any button on remote controller.

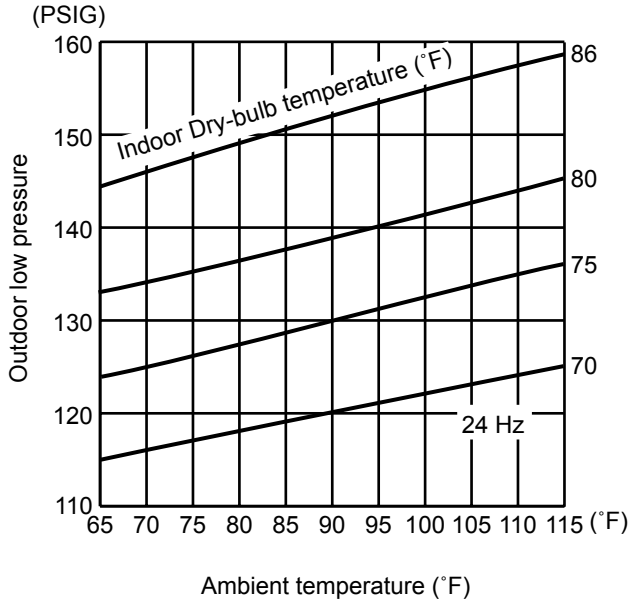

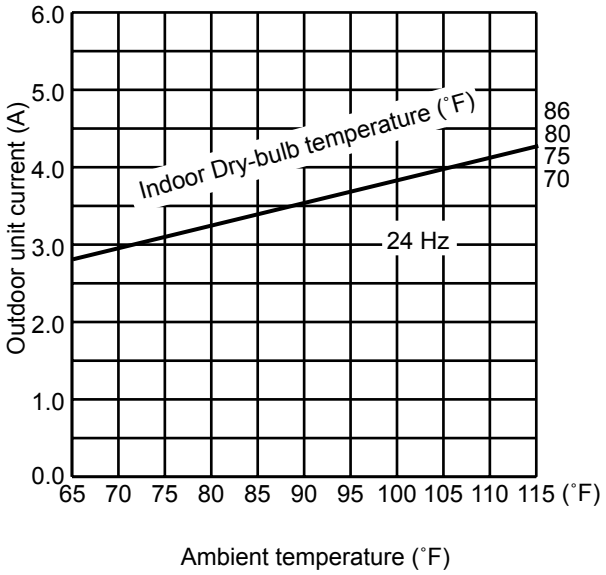

(2) HEAT operation

①Data is based on the condition of outdoor humidity 75%.

②Set air flow to High speed.

③Inverter output frequency is 32 Hz.

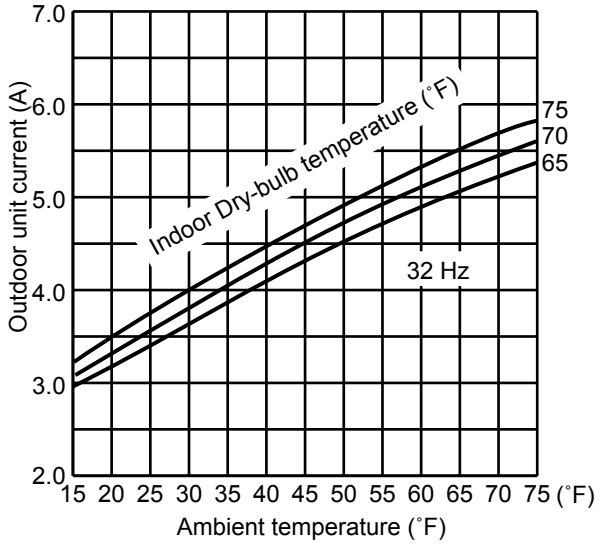

6. 09-class unit in single operation (OUTDOOR UNIT : MXZ-3B24NA MXZ-3B30NA MXZ-4B36NA)

(1) COOL operation

①Data is based on the condition of indoor humidity 50%

②Air flow speed : High

③Inverter output frequency : 24 Hz

<How to work fixed-frequency operation>

1. Set emergency switch to COOL or HEAT. The switch is located on indoor unit.
2. Press emergency run ON/OFF button.
3. Compressor starts running at 24 Hz (COOL) or 32 Hz (HEAT).
4. Indoor fan runs at High speed and continues for 30 minutes.
5. To cancel this operation, press emergency run ON/OFF button or any button on remote controller.

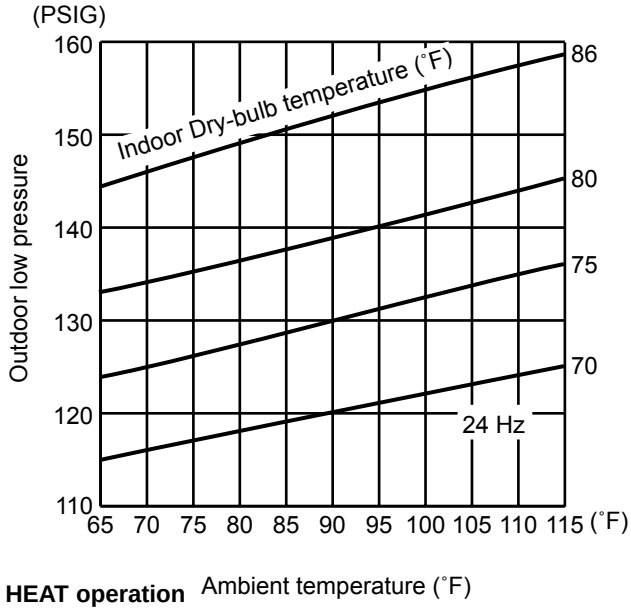

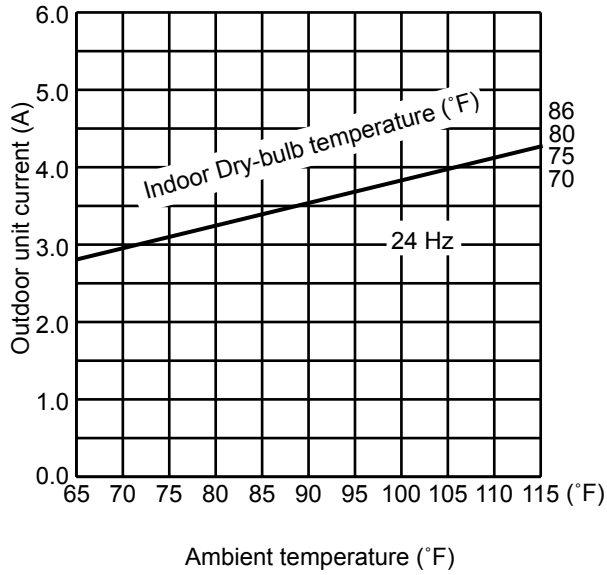

(2) HEAT operation

①Data is based on the condition of outdoor humidity 75%.

②Set air flow to High speed.

③Inverter output frequency is 32 Hz.

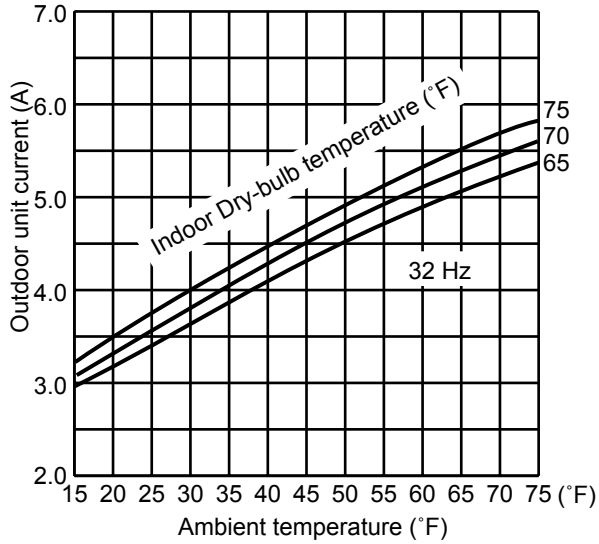

7. 12-class unit in single operation (OUTDOOR UNIT : MXZ-3B24NA MXZ-3B30NA MXZ-4B36NA)

(1) COOL operation

①Data is based on the condition of indoor humidity 50%

②Air flow speed : High

③Inverter output frequency : 24 Hz

<How to work fixed-frequency operation>

1. Set emergency switch to COOL or HEAT. The switch is located on indoor unit.
2. Press emergency run ON/OFF button.
3. Compressor starts running at 24 Hz (COOL) or 32 Hz (HEAT).
4. Indoor fan runs at High speed and continues for 30 minutes.
5. To cancel this operation, press emergency run ON/OFF button or any button on remote controller.

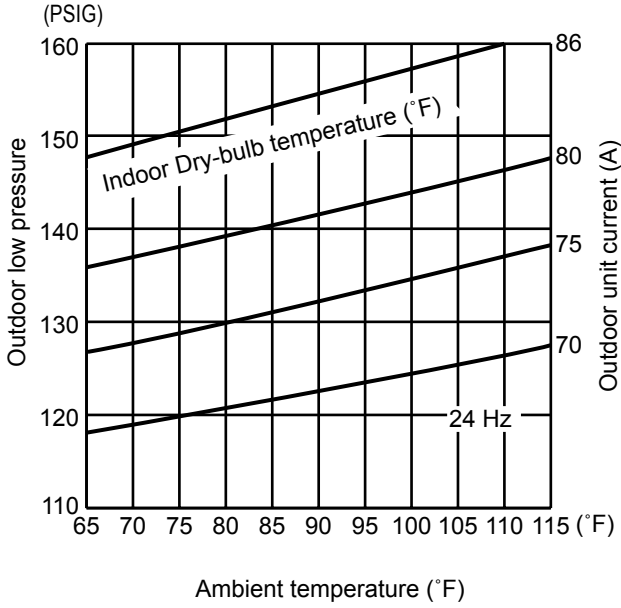

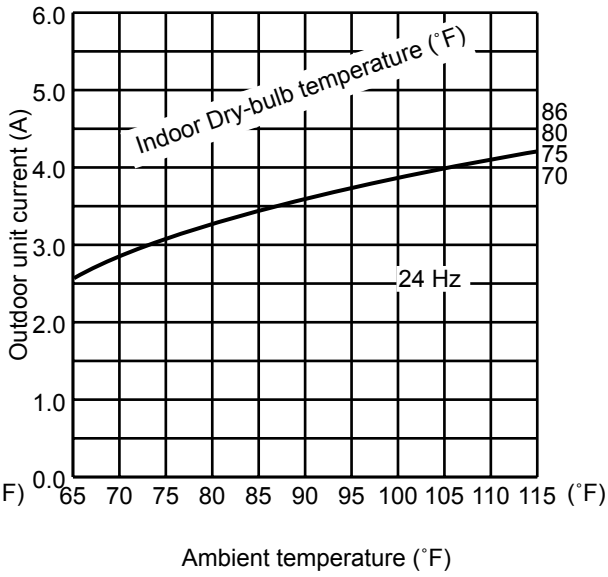

(2) HEAT operation

①Data is based on the condition of outdoor humidity 75%.

②Set air flow to High speed.

③Inverter output frequency is 32 Hz.

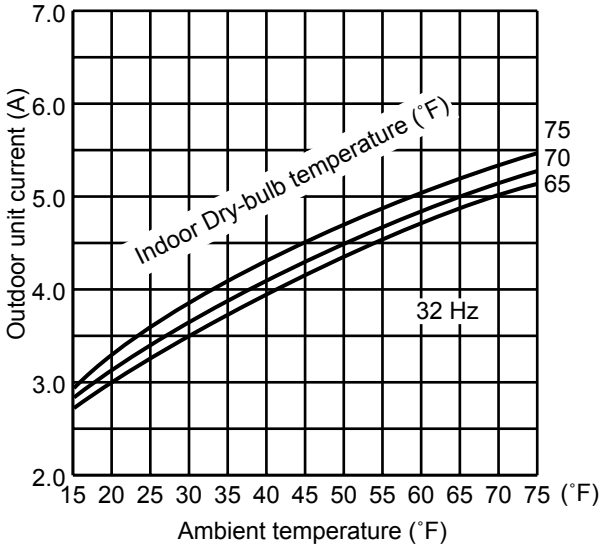

8. 15-class unit in single operation (OUTDOOR UNIT : MXZ-3B24NA MXZ-3B30NA MXZ-4B36NA)

(1) COOL operation

①Data is based on the condition of indoor humidity 50%

②Air flow speed : High

③Inverter output frequency : 24 Hz

<How to work fixed-frequency operation>

1. Set emergency switch to COOL or HEAT. The switch is located on indoor unit.
2. Press emergency run ON/OFF button.
3. Compressor starts running at 24 Hz (COOL) or 32 Hz (HEAT).
4. Indoor fan runs at High speed and continues for 30 minutes.
5. To cancel this operation, press emergency run ON/OFF button or any button on remote controller.

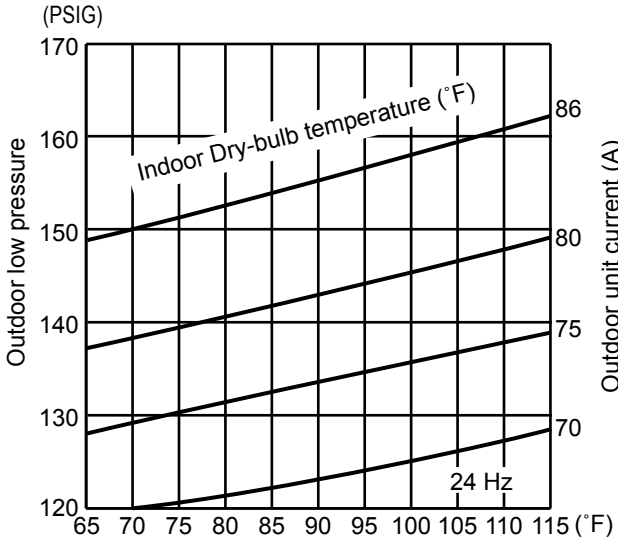

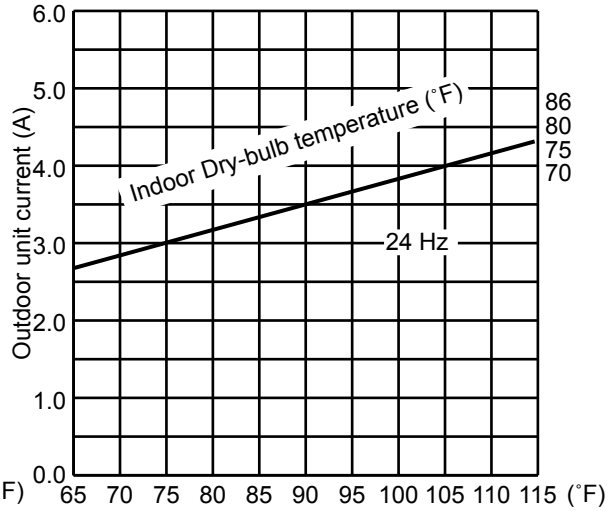

(2) HEAT operation

①Data is based on the condition of outdoor humidity 75%

②Set air flow to High speed.

③Inverter output frequency is 32 Hz.

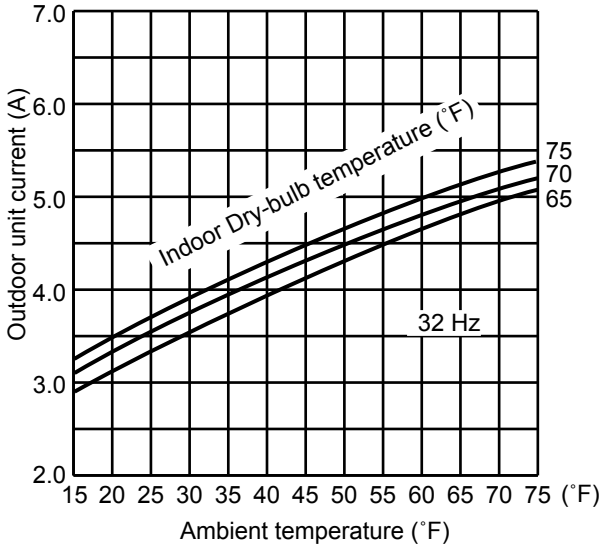

9. 18-class unit in single operation (OUTDOOR UNIT : MXZ-3B24NA MXZ-3B30NA MXZ-4B36NA)

(1) COOL operation

①Data is based on the condition of indoor humidity 50%

②Air flow speed : High

③Inverter output frequency : 24 Hz

<How to work fixed-frequency operation>

1. Set emergency switch to COOL or HEAT. The switch is located on indoor unit.
2. Press emergency run ON/OFF button.
3. Compressor starts running at 24 Hz (COOL) or 32 Hz (HEAT).
4. Indoor fan runs at High speed and continues for 30 minutes.
5. To cancel this operation, press emergency run ON/OFF button or any button on remote controller.

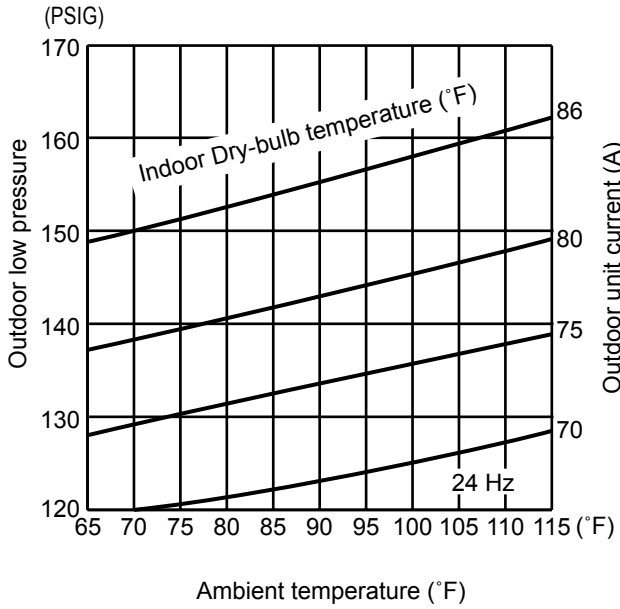

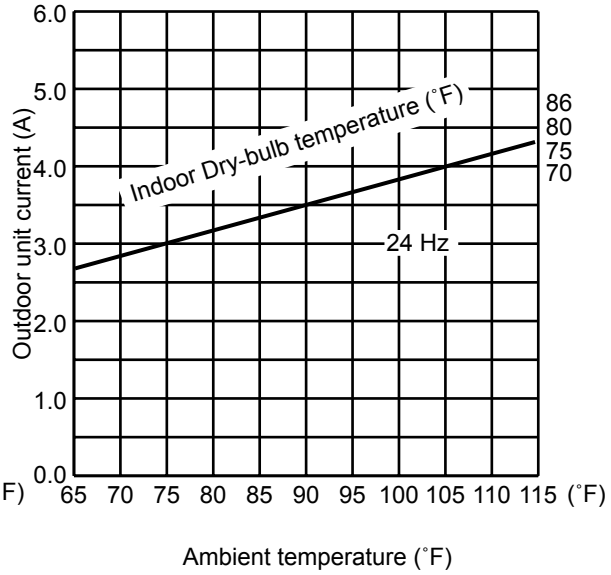

(2) HEAT operation

①Data is based on the condition of outdoor humidity 75%.

②Set air flow to High speed.

③Inverter output frequency is 32 Hz.

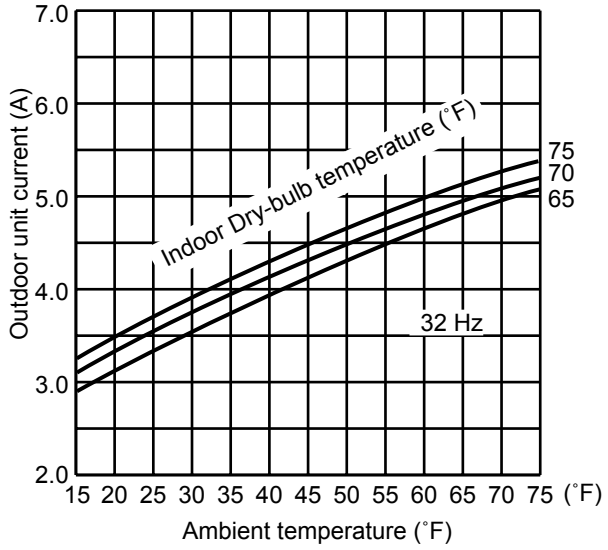

10. 24-class unit in single operation (OUTDOOR UNIT : MXZ-4B36NA)

(1) COOL operation

①Data is based on the condition of indoor humidity 50%

②Air flow speed : High

③Inverter output frequency : 24 Hz

<How to work fixed-frequency operation>

1. Set emergency switch to COOL or HEAT. The switch is located on indoor unit.
2. Press emergency run ON/OFF button.
3. Compressor starts running at 24 Hz (COOL) or 32 Hz (HEAT).
4. Indoor fan runs at High speed and continues for 30 minutes.
5. To cancel this operation, press emergency run ON/OFF button or any button on remote controller.

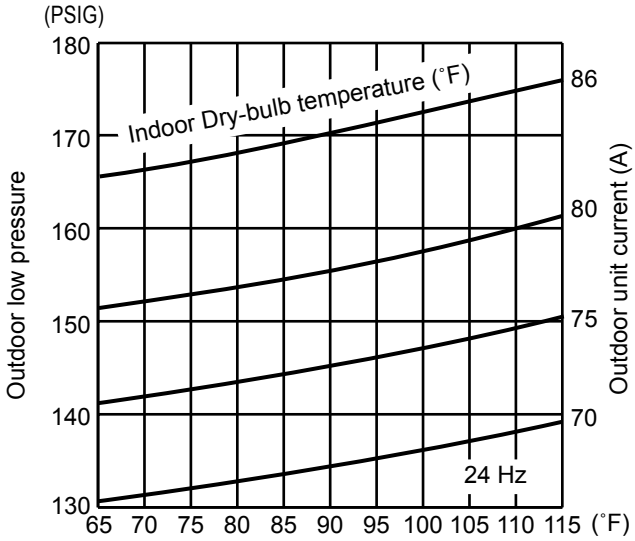

Ambient temperature (˚F)

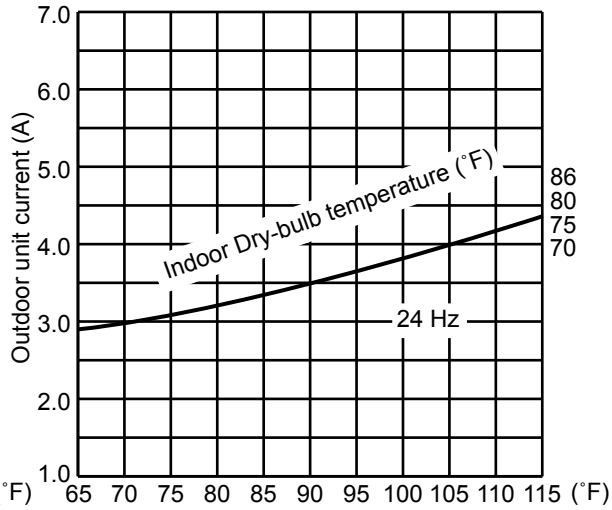

Ambient temperature (˚F)

(2) HEAT operation

①Data is based on the condition of outdoor humidity 75%

②Set air flow to High speed.

③Inverter output frequency is 32 Hz.

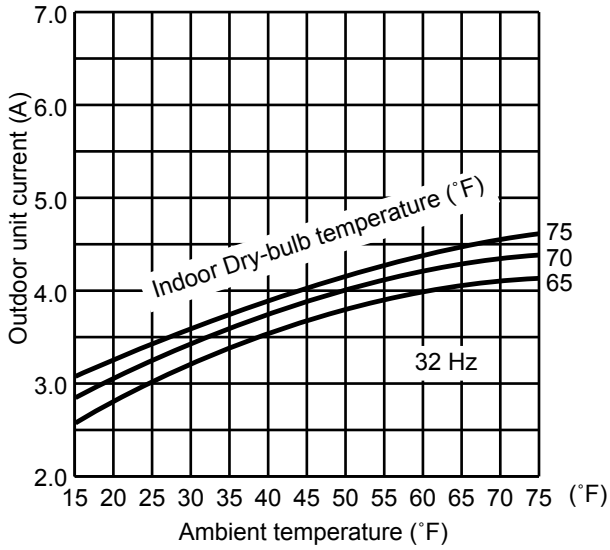

Ambient temperature (˚F)

11. 06-class unit in single operation (OUTDOOR UNIT : MXZ-5B42NA)

(1) COOL operation

①Data is based on the condition of indoor humidity 50%

②Air flow speed : High

③Inverter output frequency : 24 Hz

<How to work fixed-frequency operation>

1. Set emergency switch to COOL or HEAT. The switch is located on indoor unit.
2. Press emergency run ON/OFF button.
3. Compressor starts running at 17 Hz (COOL) or 23 Hz (HEAT).
4. Indoor fan runs at High speed and continues for 30 minutes.
5. To cancel this operation, press emergency run ON/OFF button or any button on remote controller.

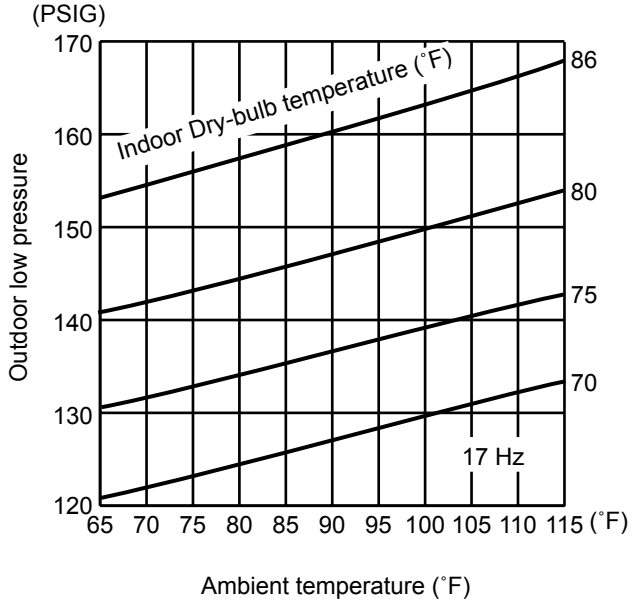

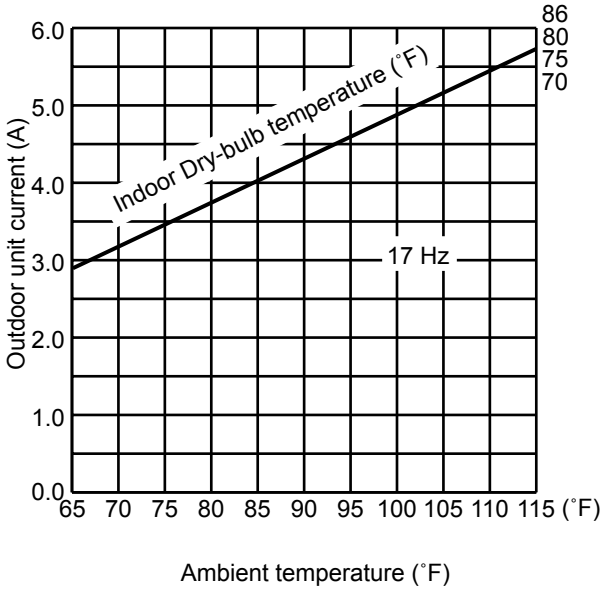

(2) HEAT operation

①Data is based on the condition of outdoor humidity 75%.

②Set air flow to High speed.

③Inverter output frequency is 32 Hz.

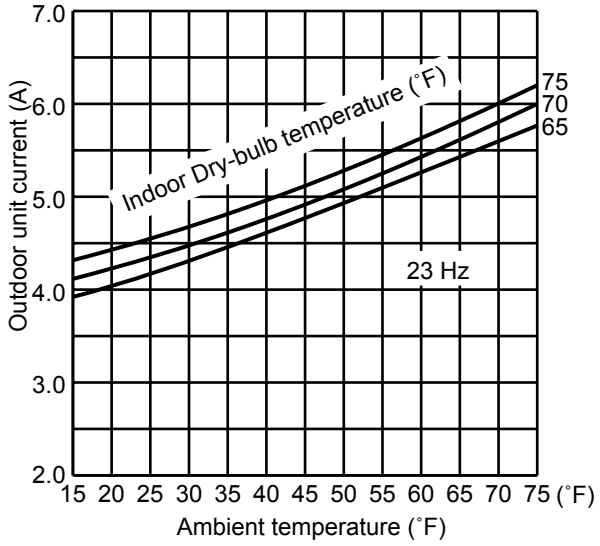

12. 09-class unit in single operation (OUTDOOR UNIT : MXZ-5B42NA)

(1) COOL operation

①Data is based on the condition of indoor humidity 50%

②Air flow speed : High

③Inverter output frequency : 24 Hz

<How to work fixed-frequency operation>

1. Set emergency switch to COOL or HEAT. The switch is located on indoor unit.
2. Press emergency run ON/OFF button.
3. Compressor starts running at 17 Hz (COOL) or 23 Hz (HEAT).
4. Indoor fan runs at High speed and continues for 30 minutes.
5. To cancel this operation, press emergency run ON/OFF button or any button on remote controller.

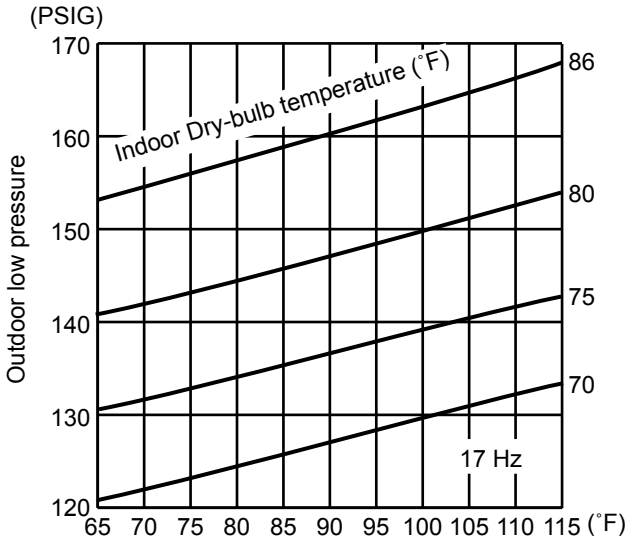

Ambient temperature (˚F)

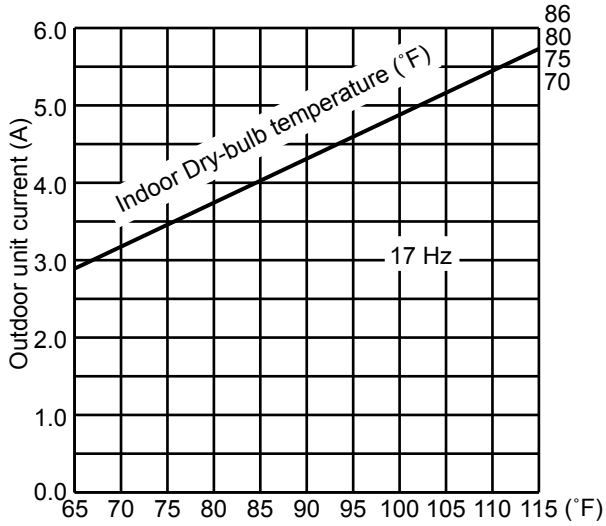

Ambient temperature (˚F)

(2) HEAT operation

①Data is based on the condition of outdoor humidity 75%.

②Set air flow to High speed.

③Inverter output frequency is 32 Hz.

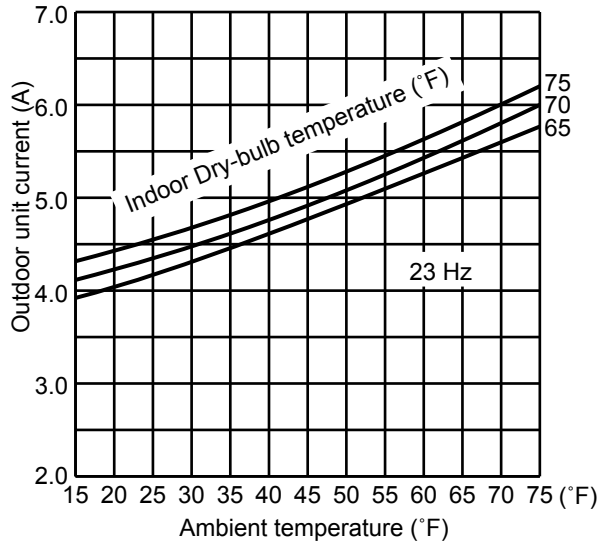

Ambient temperature (˚F)

13. 12-class unit in single operation (OUTDOOR UNIT : MXZ-5B42NA)

(1) COOL operation

①Data is based on the condition of indoor humidity 50%

②Air flow speed : High

③Inverter output frequency : 24 Hz

<How to work fixed-frequency operation>

1. Set emergency switch to COOL or HEAT. The switch is located on indoor unit.
2. Press emergency run ON/OFF button.
3. Compressor starts running at 17 Hz (COOL) or 23 Hz (HEAT).
4. Indoor fan runs at High speed and continues for 30 minutes.
5. To cancel this operation, press emergency run ON/OFF button or any button on remote controller.

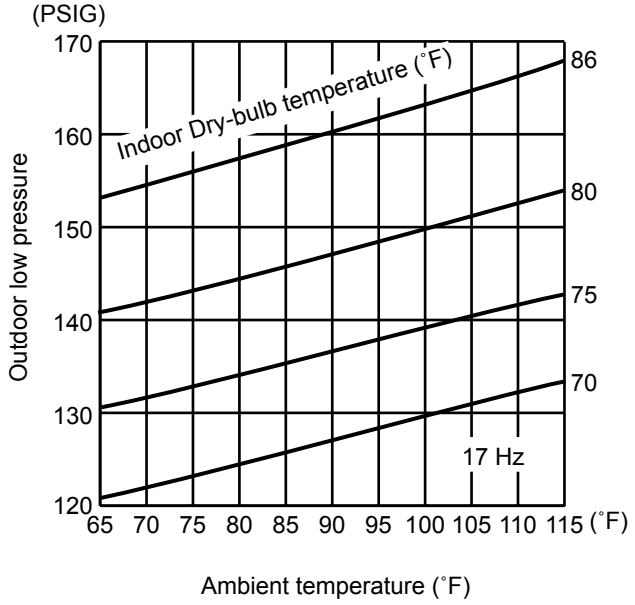

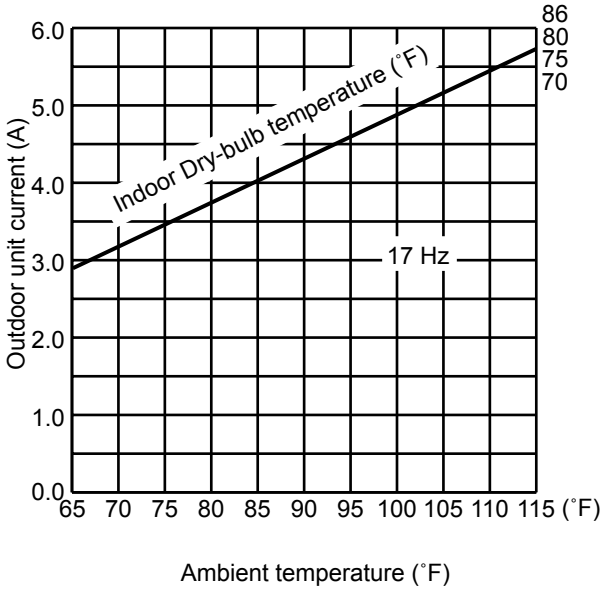

(2) HEAT operation

①Data is based on the condition of outdoor humidity 75%.

②Set air flow to High speed.

③Inverter output frequency is 32 Hz.

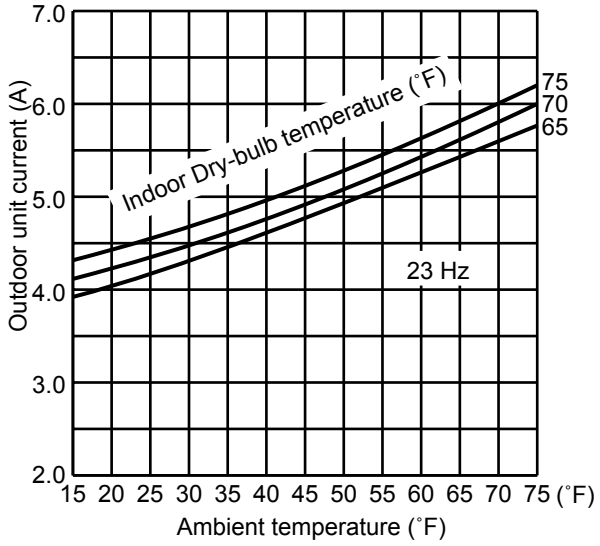

14. 15-class unit in single operation (OUTDOOR UNIT : MXZ-5B42NA)

(1) COOL operation

①Data is based on the condition of indoor humidity 50%

②Air flow speed : High

③Inverter output frequency : 24 Hz

<How to work fixed-frequency operation>

1. Set emergency switch to COOL or HEAT. The switch is located on indoor unit.
2. Press emergency run ON/OFF button.
3. Compressor starts running at 17 Hz (COOL) or 23 Hz (HEAT).
4. Indoor fan runs at High speed and continues for 30 minutes.
5. To cancel this operation, press emergency run ON/OFF button or any button on remote controller.

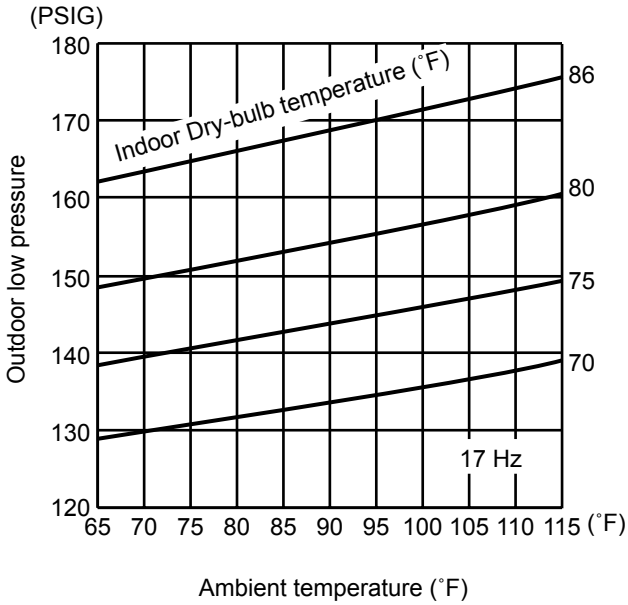

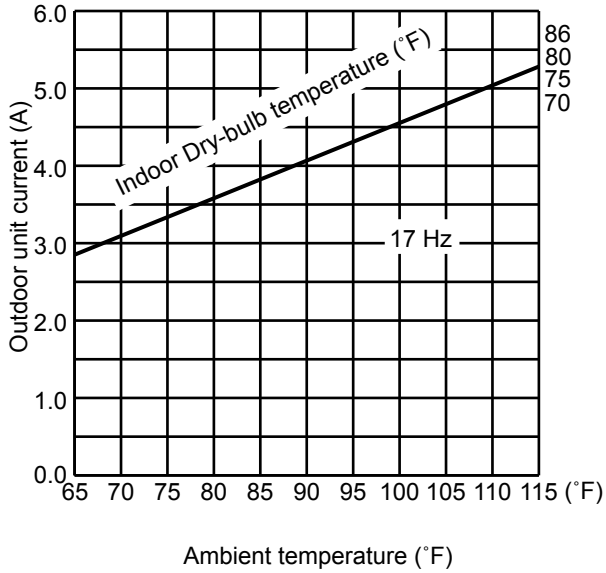

(2) HEAT operation

①Data is based on the condition of outdoor humidity 75%.

②Set air flow to High speed.

③Inverter output frequency is 32 Hz.

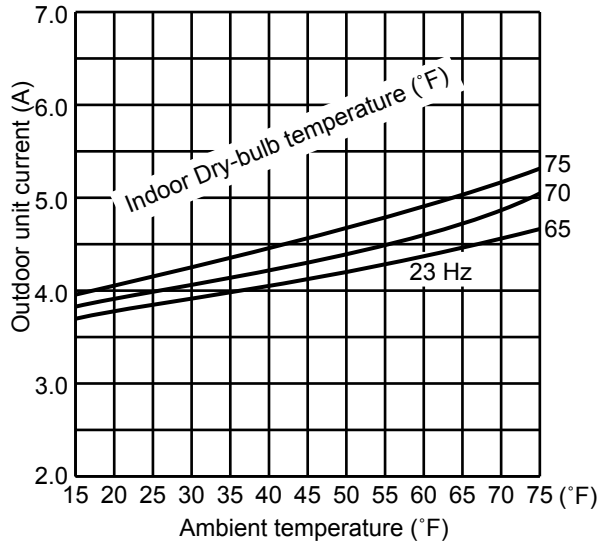

15. 18-class unit in single operation (OUTDOOR UNIT : MXZ-5B42NA)

(1) COOL operation

①Data is based on the condition of indoor humidity 50%

②Air flow speed : High

③Inverter output frequency : 24 Hz

<How to work fixed-frequency operation>

1. Set emergency switch to COOL or HEAT. The switch is located on indoor unit.
2. Press emergency run ON/OFF button.
3. Compressor starts running at 17 Hz (COOL) or 23 Hz (HEAT).
4. Indoor fan runs at High speed and continues for 30 minutes.
5. To cancel this operation, press emergency run ON/OFF button or any button on remote controller.

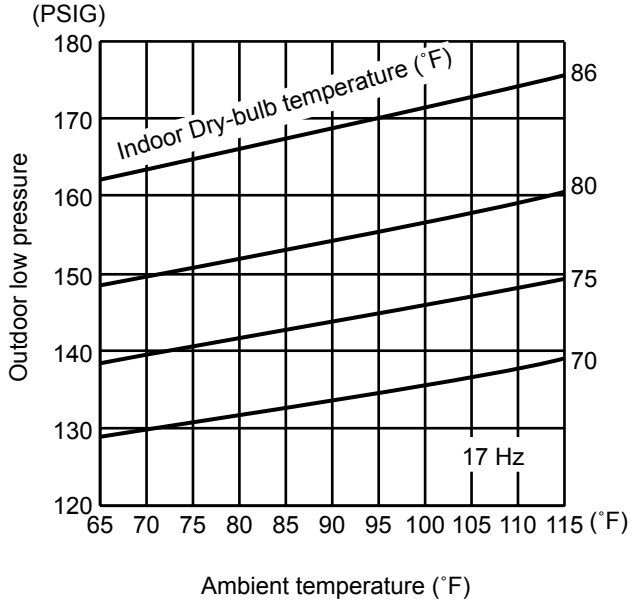

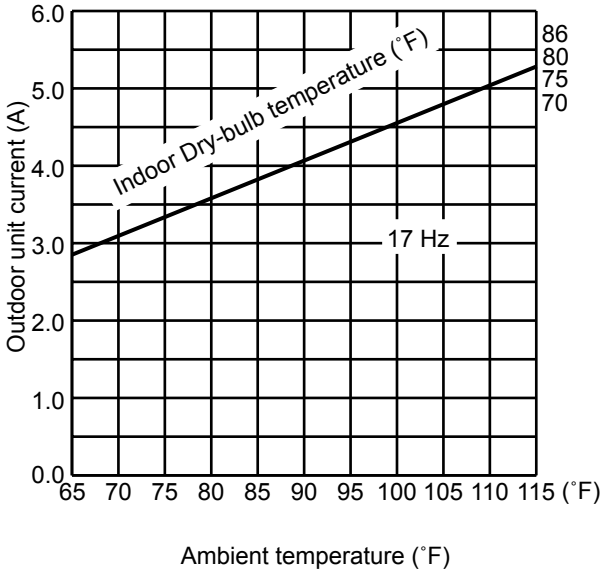

(2) HEAT operation

①Data is based on the condition of outdoor humidity 75%.

②Set air flow to High speed.

③Inverter output frequency is 32 Hz.

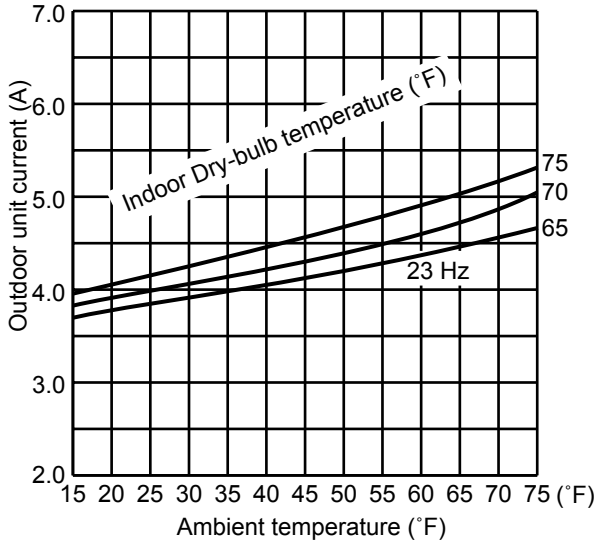

16. 24-class unit in single operation (OUTDOOR UNIT : MXZ-5B42NA)

(1) COOL operation

①Data is based on the condition of indoor humidity 50%

②Air flow speed : High

③Inverter output frequency : 24 Hz

<How to work fixed-frequency operation>

1. Set emergency switch to COOL or HEAT. The switch is located on indoor unit.
2. Press emergency run ON/OFF button.
3. Compressor starts running at 17 Hz (COOL) or 23 Hz (HEAT).
4. Indoor fan runs at High speed and continues for 30 minutes.
5. To cancel this operation, press emergency run ON/OFF button or any button on remote controller.

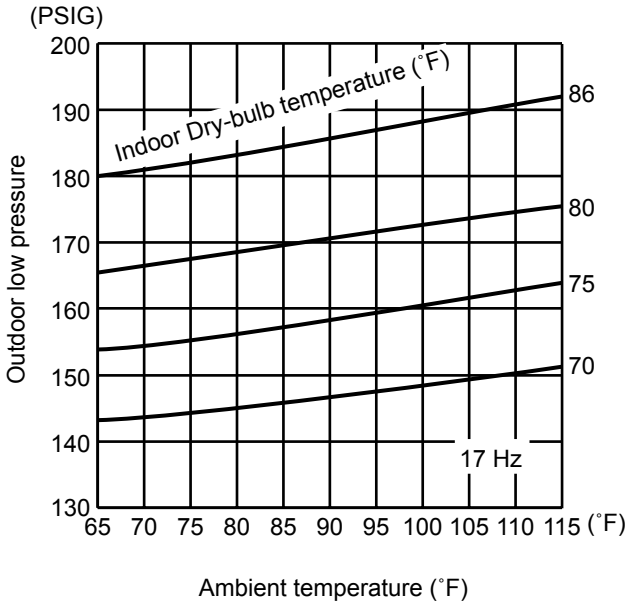

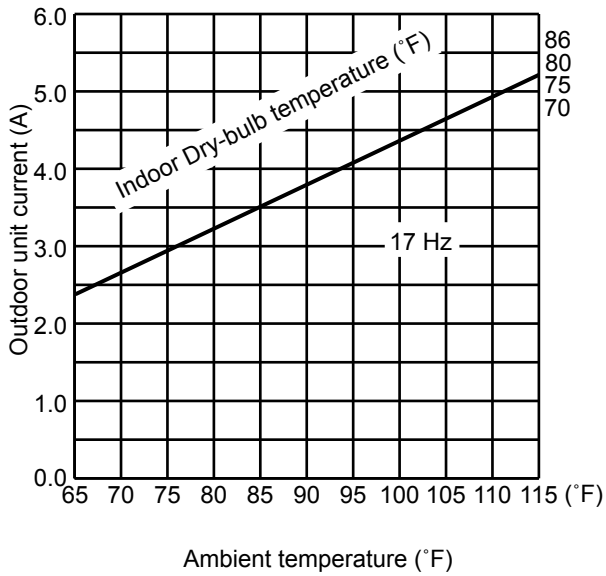

(2) HEAT operation

①Data is based on the condition of outdoor humidity 75%.

②Set air flow to High speed.

③Inverter output frequency is 32 Hz.

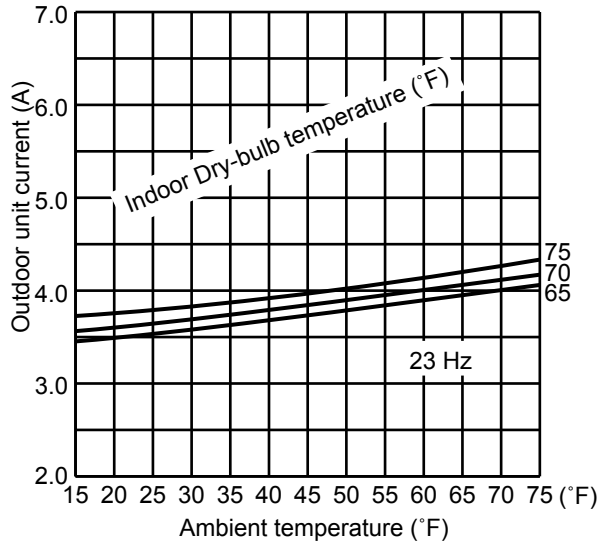

9 ACTUATOR CONTROL

MXZ-2B20NA MXZ-3B24NA MXZ-3B30NA MXZ-4B36NA MXZ-5B42NA

Relation between main sensor and actuator

Sensor	Purpose	Actuator				
		Compressor	LEV	Outdoor fan motor	4-way valve	Solenoid valve **(MXZ-5B)**
Discharge temperature thermistor	Protection	○	○			○
Indoor coil thermistor	Defrosting Protection	○	○	○		○
Defrost thermistor	Defrosting	○	○	○	○	
Fin temperature thermistor	Protection	○		○		
Ambient temperature thermistor	Control	○	○	○		○
Outdoor heat exchanger temperature	Protection	○	○	○		○
Capacity code	Control	○	○			

10 SERVICE FUNCTIONS

MXZ-2B20NA MXZ-3B24NA MXZ-3B30NA MXZ-4B36NA MXZ-5B42NA

10-1. PRE-HEAT CONTROL

If moisture gets into the refrigerant cycle, or when refrigerant is liquefied and collected in the compressor, it may interfere the start-up of the compressor.
To improve start-up condition, the compressor is energized even while it is not operating.
This is to generate heat at the winding.
The compressor uses about 50 W when pre-heat control is turned ON.
Pre-heat control is ON at initial setting.

[How to deactivate pre-heat control]

① Turn OFF the power supply for the air conditioner before making the setting.
② Set the "4" of SW1 on the electronic control P.C. board to ON to deactivate pre-heat control function **(MXZ-2B20NA)**.
Set the "4" of SW2 on the electronic control P.C. board/outdoor control P.C. board to ON to deactivate pre-heat control function **(MXZ-3B24NA, MXZ-3B30NA, MXZ-4B36NA, MXZ-5B42NA)**.

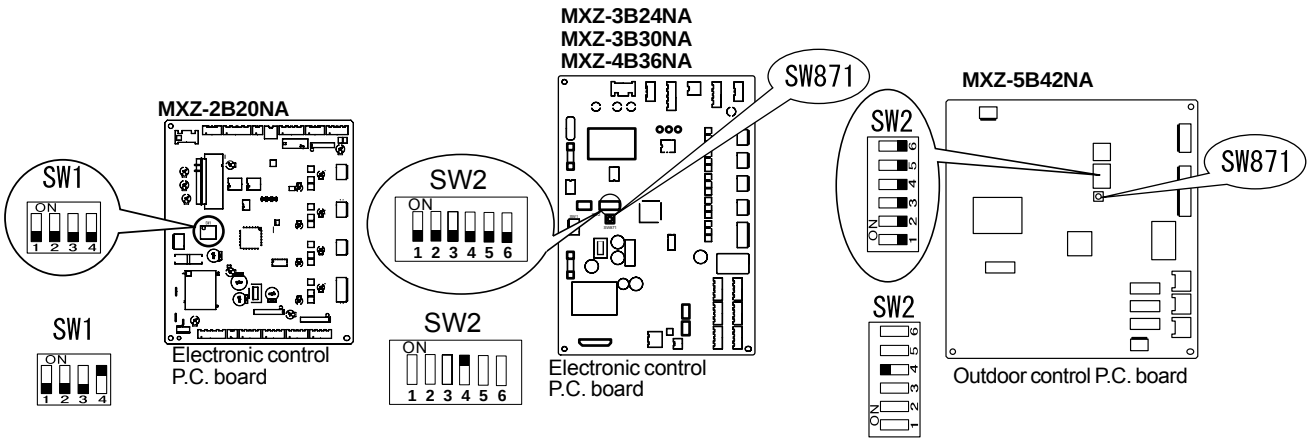

③ Turn ON the power supply for the air conditioner.

NOTE: Pre-heat control will be turned OFF when the breaker is turned OFF.

10-2. AUTO LINE CORRECTING <MXZ-3B24NA, MXZ-3B30NA, MXZ-4B36NA, MXZ-5B42NA>

Outdoor unit has an auto line correcting function which automatically detects and corrects improper wiring or piping.

Improper wiring or piping can be automatically detected by pressing the piping/wiring correction switch (SW871).
When improper wiring or piping is detected, wiring lines are corrected.
This will be completed in about 10 to 20 minutes.

[How to activate this function]

1. Check that outside temperature is above 32˚F.
   (This function does not work when outside temperature is not above 32˚F.)
2. Check that the stop valves of the liquid pipe and gas pipe are open.
3. Check that the wiring between indoor and outdoor unit is correct.
   (If the wiring is not correct, this function does not work.)
4. Turn ON the power supply and wait at least 1 minute.
5. Press the piping/wiring correction switch (SW871) on the electronic control P.C. board.
   Do not touch energized parts.

   LED indication during detection:

LED1 (Red)	LED2 (Yellow)	LED3 (Green)
Lighted	Lighted	Once

   LED indication after detection:

LED1 (Red)	LED2 (Yellow)	LED3 (Green)	Indication
Lighted	Not lighted	Lighted	Completed (Problem corrected/ nomal)
Once	Once	Once	Not completed (Detection failed)
Other indications			Refer to "SAFETY PRECAUTIONS WHEN LED FLASHES" located behind the service panel.

   ※ Make sure that the valves are open and the pipes are not collapsed or clogged.
6. Press the switch to cancel.

   LED indication after cancel :

LED1 (Red)	LED2 (Yellow)	LED3 (Green)
Lighted	Lighted	Not lighted

NOTE : Indoor unit cannot be operated while this function is activated.
When this function is activated while indoor unit is operating, the operation will be stopped.
Operate indoor unit after the auto line correcting is finished.
Pressing the switch during detection cancels this function.

The record of auto line correcting can be confirmed in the following way:

Press the switch for more than 5 seconds.
LED will show the record of auto correcting for about 30 seconds as shown in the table below:

Number of blinks			Wiring line
LED1 (Red)	LED2 (Yellow)	LED3 (Green)	
Once	Once	Lighted	Not corrected
3 times	3 times	Lighted	Corrected

NOTE : Activate this function to confirm the correct wiring after replacing the electronic control P.C. board.
(Previous records are deleted when the electronic control P.C. board is replaced.)
The record cannot be shown if auto line correcting is not canceled (Refer to "How to activate this function").

11 TROUBLESHOOTING

MXZ-2B20NA MXZ-3B24NA MXZ-3B30NA MXZ-4B36NA MXZ-5B42NA

11-1. CAUTIONS ON TROUBLESHOOTING

1. Before troubleshooting, check the following:

1) Check the power supply voltage.
2) Check the indoor/outdoor connecting wire for miswiring.

2. Take care of the following during servicing.

1) Before servicing the air conditioner, be sure to turn off the unit first with the remote controller, and then after confirming the horizontal vane is closed, turn off the breaker and/or disconnect the power plug.
2) Be sure to turn OFF the power supply before removing the front panel, the cabinet, the top panel, and the electronic control P.C. board.
3) When removing the electrical parts, be careful of the residual voltage of smoothing capacitor.
4) When removing the electronic control P.C. board, hold the edge of the board with care NOT to apply stress on the components.
5) When connecting or disconnecting the connectors, hold the housing of the connector. DO NOT pull the lead wires.

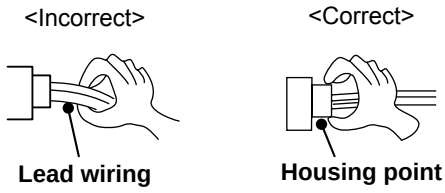

3. Troubleshooting procedure

1) Check if the OPERATION INDICATOR lamp on the indoor unit is flashing on and off to indicate an abnormality. To make sure, check how many times the OPERATIONAL INDICATOR lamp is flashing on and off before starting service work.
2) When the electronic control P.C. board seems to be defective, check the copper foil pattern for disconnection and the components for bursting and discoloration.
3) When troubleshooting, refer to 11-2, 11-3 and 11-4.

11-2. FAILURE MODE RECALL FUNCTION

This air conditioner can memorize the abnormal condition which has occurred once.
Even though LED indication listed on the troubleshooting check table (11-4) disappears, the memorized failure details can be recalled.

1. Flow chart of failure mode recall function for the indoor/outdoor unit

Refer to the service manual of indoor unit.

2. Flow chart of the detailed outdoor unit failure mode recall function

Operational procedure

The outdoor unit might be abnormal.
Check if outdoor unit is abnormal according to the following procedures.

↓

Make sure that the remote controller is set to the failure mode recall function. ※3

※1 Regardless of normal or abnormal condition, 2 short beeps are emitted as the signal is received.

※3 Refer to the service manual of indoor unit.

↓

With the remote controller headed towards the indoor unit, press the TEMPERATURE buttons to adjust the set temperature to 25°C. ※1

↓

Does the OPERATION INDICATOR lamp on the indoor unit blink at the interval of 0.5 seconds?
Blinks: The outdoor unit is abnormal. Beep is emitted at the same timing as the blinking of the OPERATION INDICATOR lamp. ※2

No (OFF) → The outdoor unit is normal. → Release the failure mode recall function. ※3

Yes (Blinks) ↓

The outdoor unit is abnormal.
Check the blinking pattern, and identify the abnormal point by referring to the outdoor unit failure mode table (11-2.3.).
Make sure to check at least two consecutive blinking cycles. ※2

↓

Release the failure mode recall function. ※3

↓

Repair the failure parts.

↓

Delete the memorized abnormal condition. ※3

↓

Release the failure mode recall function. ※3

NOTE: 1. Make sure to release the failure mode recall function after it is set up, otherwise the unit cannot operate properly.
2. If the abnormal condition is not deleted from the memory, the last abnormal condition is kept memorized.

※2.Blinking pattern when outdoor unit is abnormal:

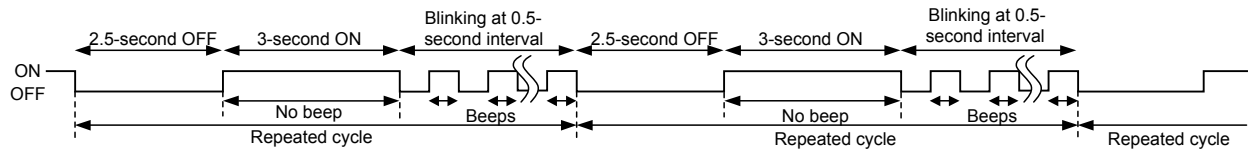

3. Outdoor unit failure mode table
MXZ-2B/3B/4B

The left lamp of OPERATION INDICATOR lamp (Indoor unit)	Abnormal point (Failure mode/protection)	LED indication (Outdoor P.C. board) LED 1	LED 2	Condition	Remedy	Indoor/outdoor unit failure mode recall function
OFF	None (Normal)	Lighted	Lighted			
2-time flash	Outdoor power system	Lighted	Lighted	Overcurrent protection cut-out operates 3 consecutive times within 1 minute after the compressor gets started, or converter protection cut-out or bus-bar voltage protection cut-out operates 3 consecutive times within 3 minutes after start-up.	• Check the connection of the compressor connecting wire. • Refer to 11-6. Ⓔ "How to check inverter/compressor". • Check the stop valve.	○
3-time flash	Discharge temperature thermistor	Lighted	Once	A thermistor shorts or opens during compressor running.	• Refer to 11-6. Ⓕ "Check of outdoor thermistors".	○
	Defrost thermistor	Lighted	Once			
	Ambient temperature thermistor	Lighted	Twice			
	Fin temperature thermistor	Lighted	3 times			
	P.C. board temperature thermistor	Lighted	4 times		• Replace the outdoor electronic control P.C. board.	
	Outdoor heat exchanger temperature thermistor	Lighted	9 times		• Refer to 11-6. Ⓕ "Check of outdoor thermistors".	
4-time flash	Overcurrent	Once	Not lighted	28 A current flows into intelligent power module.	• Reconnect compressor connector. • Refer to 11-6. Ⓔ "How to check inverter/compressor". • Check the stop valve.	—
5-time flash	Discharge temperature	Lighted	Lighted	The discharge temperature exceeds 240.8°F during operation. Compressor can restart if discharge temperature thermistor reads 212°F or less 3 minutes later.	• Check refrigerant circuit and refrigerant amount. • Refer to 11-6. Ⓓ "Check of LEV".	—
6-time flash	High pressure	Lighted	Lighted	The outdoor heat exchanger temperature exceeds 158°F during cooling or the indoor gas pipe temperature exceeds 158°F during heating.	• Check refrigerant circuit and refrigerant amount. • Check the stop valve.	—
7-time flash	Fin temperature	3 times	Not lighted	The fin temperature exceeds 188.6°F during operation.	• Check around outdoor unit. • Check outdoor unit air passage. • Refer to 11-6. Ⓖ "Check of outdoor fan motor".	—
	P.C. board temperature	4 times	Not lighted	The P.C. board temperature exceeds 158°F during operation.		
8-time flash	Outdoor fan motor	Lighted	Lighted	A failure occurs 3 consecutive times within 30 seconds after the fan gets started.	• Refer to 11-6. Ⓖ "Check of outdoor fan motor".	—
9-time flash	Nonvolatile memory data	Lighted	5 times	Nonvolatile memory data cannot be read properly.	• Replace the outdoor electronic control P.C. board.	○
10-time flash	Discharge temperature	Lighted	Lighted	The frequency of the compressor is kept 80Hz or more and the discharge temperature is kept under 102.2°F for more than 20 minutes.	• Check refrigerant circuit and refrigerant amount. • Refer to 11-6. Ⓓ "Check of LEV".	—
11-time flash	Communication error between P.C. boards	Lighted	6 times	Communication error occurs between the electronic control P.C. board and power board for more than 10 seconds.	• Check the connecting wire between outdoor electronic control P.C. board and power board.	—
				The communication between boards protection cut-out operates 2 consecutive times.		○
	Current sensor	Lighted	7 times	A short or open circuit is detected in the current sensor during compressor operating.		—
				Current sensor protection cut-out operates 2 consecutive times.		○
	Zero cross detecting circuit	5 times	Not lighted	Zero cross signal cannot be detected while the compressor is operating.	• Check the connecting wire among electronic control P.C. board, noise filter P.C. board and power board.	—
				The protection cut-out of the zero cross detecting circuit operates 10 consecutive times.		○
	Converter	5 times	Not lighted	A failure is detected in the operation of the converter during operation.	• Check the voltage of power supply. • Replace the power board.	—
	Bus-bar voltage (1)	5 times	Not lighted	The bus-bar voltage exceeds 400V or falls to 200V or below during compressor operating.		
	Bus-bar voltage (2) ※Even if this protection stop is performed continuously three times, it does not mean the abnormality in outdoor power system.	6 times	Not lighted	The bus-bar voltage exceeds 400V or falls to 50V or below during compressor operating.	• Check the voltage of power supply. • Replace the outdoor electronic control P.C. board.	
15-time flash	LEV and drain pump	Lighted	Lighted	The indoor unit detects an abnormality in the LEV and drain pump.	• Refer to 11-6. Ⓓ "Check of LEV".• Check the drain pump of the indoor unit.	—

NOTE: Blinking patterns of this mode differ from the ones of Troubleshooting check table (11-4.).

MXZ-5B

The left lamp of OPERATION INDICATOR lamp (Indoor unit)	Abnormal point (Failure mode/protection)	LED indication (Outdoor P.C. board)		Condition	Remedy	Indoor/outdoor unit failure mode recall function
		LED 1	LED 2			
OFF	None (Normal)	Lighted	Lighted			
2-time flash	Outdoor power system	Lighted	Lighted	Overcurrent protection cut-out operates 3 consecutive times, bus-bar voltage protection cut-out operates 3 consecutive times, or primary current protection cut-out operates 3 consecutive times within 1minute after the compressor gets started.	• Check the connection of the compressor connecting wire. • Refer to 11-6. Ⓔ How to check inverter/compressor. • Check the stop valve.	○
3-time flash	Discharge temperature thermistor	Lighted	Once	Thermistor shorts or opens during compressor running.	• Refer to 11-6. Ⓕ "Check of outdoor thermistors".	○
	Defrost thermistor	Lighted	Once			
	Ambient temperature thermistor	Lighted	Twice			
	Fin temperature thermistor	Lighted	3 times		• Replace the outdoor power P.C. board .	
	P.C. board temperature thermistor	Lighted	4 times		• Replace the outdoor power P.C. board .	
	Outdoor heat exchanger temperature thermistor	Lighted	9 times		• Refer to 11-6. Ⓕ "Check of outdoor thermistors".	
4-time flash	Overcurrent	Once	Not lighted	40 A current flows into intelligent power module.	• Reconnect compressor connector. • Refer to 11-6. Ⓔ "How to check inverter/compressor". • Check the stop valve.	—
	Out-of-step protection	9 times	Not lighted	Waveform of compressor current is distorted.	• Refer to 11-6. Ⓔ " How to check inverter/compressor.	
5-time flash	Discharge temperature	Lighted	Lighted	Discharge temperature exceeds 237.2°F during operation. Compressor can restart if discharge temperature thermistor reads 212°F or less 3 minutes later.	• Check refrigerant circuit and refrigerant amount. • Refer to 11-6. Ⓓ "Check of LEV".	—
6-time flash	High pressure	Lighted	Lighted	High-pressure is detected with the high-pressure switch (HPS) during operation.	• Check refrigerant circuit and refrigerant amount. • Check the stop valve.	—
				The outdoor heat exchanger temperature exceeds 158°F during cooling or the indoor gas pipe temperature exceeds 158°F during heating.		
7-time flash	Fin temperature	3 times	Not lighted	The fin temperature exceeds:230°F during operation.	• Check around outdoor unit. • Check outdoor unit air passage. • Refer to 11-6. Ⓖ "Check of outdoor fan motor".	—
	P.C. board temperature	4 times	Not lighted	The P.C. board temperature exceeds 203°F during operation.		
8-time flash	Outdoor fan motor	Lighted	Lighted	The fan motor speed is 50 rpm or less or 1500 rpm or more for 1 minute, or the fan motor speed is 100 rpm or less for 15 seconds when the outside temperature is 68°F or more.	• Refer to 11-6. Ⓖ "Check of outdoor fan motor".	—
9-time flash	Nonvolatile memory data	Lighted	5 times	Nonvolatile memory data cannot be read properly.	• Replace the outdoor control P.C. board. • Replace the outdoor power P.C. board.	○
10-time flash	Discharge temperature	Lighted	Lighted	The frequency of the compressor is kept 58Hz or more and the discharge temperature is kept under 122°F (cooling)/104°F (heating) for more than 40 minutes.	• Check refrigerant circuit and refrigerant amount. • Refer to 11-6. Ⓓ "Check of LEV".	—

NOTE: Blinking patterns of this mode differ from the ones of Troubleshooting check table (11-4.).

MXZ-5B

Upper or left lamp of OPERATION INDICATOR lamp (Indoor unit)	Abnormal point (Failure mode/protection)	LED indication (Outdoor P.C. board)		Condition	Remedy	Indoor/outdoor unit failure mode recall function
11-time flash	Communication error between P.C. boards	Lighted	6 times	Communication error occurs between the outdoor control P.C. board and outdoor power P.C. board for more than 10 seconds.	• Check the connecting wire between the outdoor control P.C. board and outdoor power P.C. board .	—
				The communication between boards protection cut-out operates 2 consecutive times.		○
	Current sensor	Lighted	7 times	After the operation starts, a short or open circuit is detected in the current sensor when the compressor is not operating.	• Replace the outdoor power P.C. board.	—
				Current sensor has been short or open circuited for 120 seconds.		○
	Zero cross detecting circuit	5 times	Not lighted	Zero cross signal cannot be detected while the compressor is operating.	• Check the connecting wire between outdoor control P.C. board and outdoor power P.C. board.	—
				The protection cut-out of the zero cross detecting circuit operates 3 consecutive times.		○
	Bus-bar voltage	6 times	Not lighted	The bus-bar voltage exceeds 400 V or falls to 300 V or below during compressor operating.	• Check the voltage of power supply. • Replace the outdoor power P.C. board .	—
12-time flash	Compressor (open phase)	10 times	Not lighted	Waveform of compressor current is distorted.	• Check the connection of the compressor connecting wire. • Refer to 11-6. Ⓔ " How to check inverter/compressor.	—
14-time flash	Power module	7 times	Not lighted	The overcurrent is detected when the frequency of the compressor is 1 Hz or less.	• Refer to 11-6. Ⓔ " How to check inverter/compressor.	—
15-time flash	LEV and drain pump	Lighted	Lighted	The indoor unit detects an abnormality in the LEV and drain pump.	• Refer to 11-6. Ⓓ "Check of LEV". • Check the drain pump of the indoor unit.	—

NOTE: Blinking patterns of this mode differ from the ones of Troubleshooting check table (11-4.).

11-3. INSTRUCTION OF TROUBLESHOOTING

• Check the indoor unit with referring to the indoor unit service manual, and confirm that there is any problem in the indoor unit.
Then, check the outdoor unit with referring to this page.

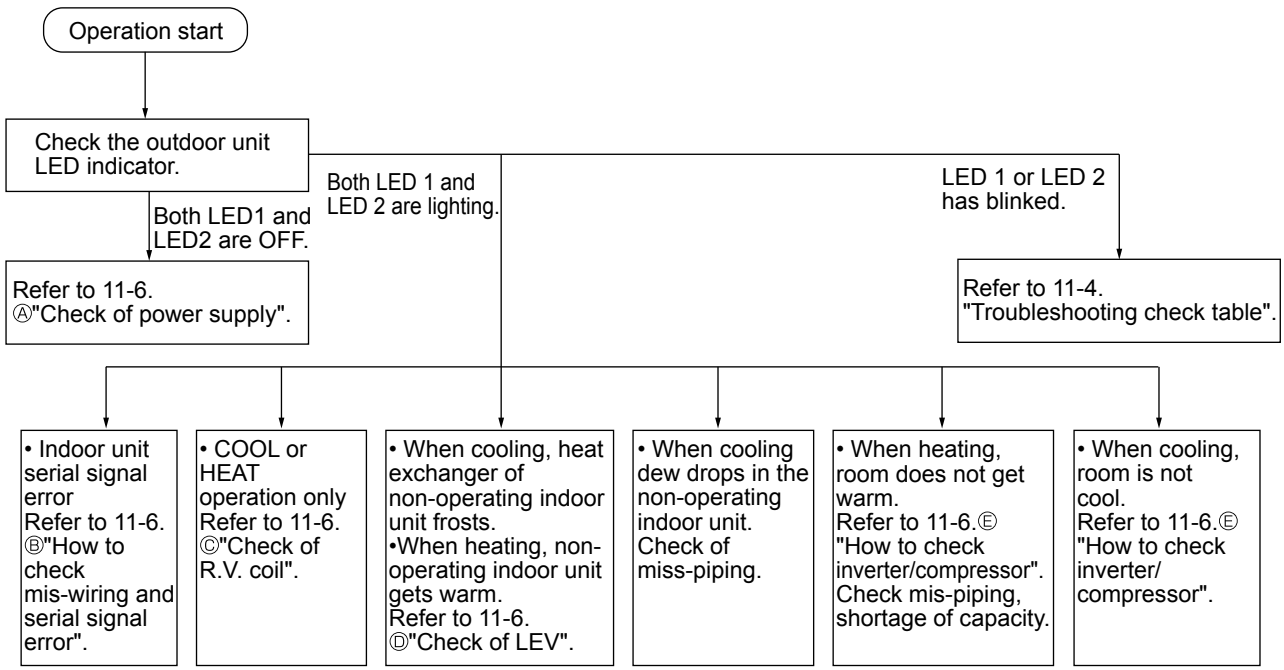

11-4. TROUBLESHOOTING CHECK TABLE

MXZ-2B/3B/4B

No.	Symptom	Indication LED1(Red)	Indication LED2(Yellow)	Abnormal point / Condition	Condition	Remedy
1	Outdoor unit does not operate.	Lighted	Once	LEV and drain pump	The indoor unit detects an abnormality in the LEV and drain pump.	• Refer to 11-6.Ⓓ "Check of LEV". • Check the drain pump of the indoor unit.
2		Lighted	Twice	Outdoor power system	Overcurrent protection cut-out operates 3 consecutive times within 1 minute after the compressor gets started, or converter protection cut-out or bus-bar voltage protection cut-out operates 3 consecutive times within 3 minutes after start-up.	• Check the connection of the compressor connecting wire. • Refer to 11-6.Ⓔ "How to check inverter/compressor". • Check the stop valve.
3		Lighted	3 times	Discharge temperature thermistor	A short circuit is detected in the thermistor during operation, or an open circuit is detected in the thermistor after 10 minutes of compressor start-up.	• Refer to 11-6.Ⓕ "Check of outdoor thermistors".
4		Lighted	4 times	Fin temperature thermistor	A short or open circuit is detected in the thermistor during operation.	• Refer to 11-6.Ⓕ "Check of outdoor thermistors".
				P.C board temperature thermistor		• Replace the outdoor electronic control P.C. board.
5		Lighted	5 times	Ambient temperature thermistor	A short or open circuit is detected in the thermistor during operation.	• Refer to 11-6.Ⓕ "Check of outdoor thermistors".
				Outdoor heat exchanger temperature thermistor	A short circuit is detected in the thermistor during operation, or an open circuit is detected in the thermistor after 5 minutes (in cooling) and 10 minutes (in heating) of compressor start-up.	
				Defrost thermistor	A short circuit is detected in the thermistor during operation, or an open circuit is detected in the thermistor after 5 minutes of compressor start-up.	
6		Lighted	7 times	Nonvolatile memory data	The nonvolatile memory data cannot be read properly.	• Replace the outdoor electronic control P.C. board.
7		Lighted	8 times	Current sensor	Current sensor protection cut-out operates 2 consecutive times.	• Replace the power board.
8		Lighted	11 times	Communication error between P.C. boards	The communication protection cut-out between boards operates 2 consecutive times.	• Check the connecting wire between outdoor electronic control P.C. board and power board.
9		Lighted	12 times	Zero cross detecting circuit	The protection cut-out of the zero cross detecting circuit operates 10 consecutive times.	• Check the connecting wire among outdoor electronic control P.C. board, noise filter P.C. board and power board.
10	'Outdoor unit stops and restarts 3 minutes later' is repeated.	Twice	Not lighted	IPM protection	Overcurrent is detected after 30 seconds of compressor start-up.	• Reconnect compressor connector. • Refer to 11-6.Ⓔ "How to check inverter/compressor". • Check the stop valve. • Check the power module (PAM module).
				Lock protection	Overcurrent is detected within 30 seconds of compressor start-up.	
11		3 times	Not lighted	Discharge temperature protection	The discharge temperature exceeds 240.8°F during operation. Compressor can restart if discharge temperature thermistor reads 212°F or less 3 minutes later.	• Check the amount of gas and refrigerant circuit. • Refer to 11-6.Ⓓ "Check of LEV".
12		4 times	Not lighted	Fin temperature protection	The fin temperature exceeds 188.6°F during operation.	•Check refrigerant circuit and refrigerant amount. •Refer to 11-6.Ⓖ "Check of outdoor fan motor".
				P.C. board temperature protection	The P.C. board temperature exceeds 158°F during operation.	
13		5 times	Not lighted	High-pressure protection	High-pressure is detected with the high-pressure switch (HPS) during operation. **(MXZ-3B24NA, MXZ-3B30NA, MXZ-4B36NA)**	• Check around of gas and the refrigerant circuit. • Check of stop valve.
					The outdoor heat exchanger temperature exceeds 158°F during cooling or the indoor gas pipe temperature exceeds 158°F during heating.	
14		8 times	Not lighted	Converter protection	A failure is detected in the operation of the converter during operation.	• Replace the power board.
15		9 times	Not lighted	Bus-bar voltage protection (1)	The bus-bar voltage exceeds 400V or falls to 200V or below during compressor operating.	• Check the voltage of power supply. • Replace the power board or the outdoor electronic control P.C. board. • Refer to 11-6. Ⓙ"Check of bus-bar voltage".
				Bus-bar voltage protection (2)	The bus-bar voltage exceeds 400V or falls to 50V or below during compressor operating.	
16		13 times	Not lighted	Outdoor fan motor	A failure occurs 3 consecutive times within 30 seconds after the fan gets started.	• Refer to 11-6.Ⓖ "Check of outdoor fan motor".
17		Lighted	8 times	Current sensor protection	A short or open circuit is detected in the current sensor during compressor operating.	• Replace the power board.
18		Lighted	11 times	Communication between P.C. boards protection	Communication error occurs between the outdoor electronic control P.C. board and power board for more than 10 seconds.	• Check the connecting wire between outdoor electronic control P.C. board and power board.
19		Lighted	12 times	Zero cross detecting circuit protection	Zero cross signal cannot be detected while the compressor is operating.	• Check the connecting wire among outdoor electronic control P.C. board, noise filter P.C. board and power board.

NOTE 1. The location of LED is illustrated at the right figure. Refer to 11-7.1.
2. LED is lighted during normal operation.

The flashing frequency shows the number of times the LED blinks after every 2.5-second OFF.
(Example) When the flashing frequency is “2”.

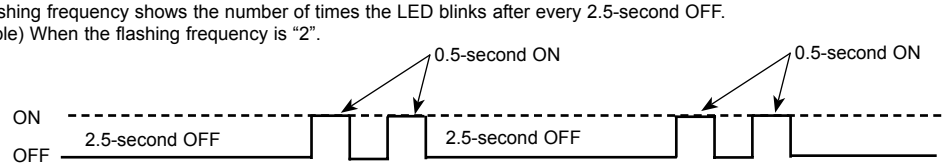

Outdoor electronic control P.C. board (Parts side)

MXZ-2B20NA

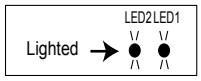

MXZ-3B24NA, MXZ-3B30NA
MXZ-4B36NA

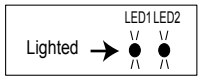

No.	Symptom	Indication		Abnormal point / Condition	Condition	Remedy
		LED1(Red)	LED2(Yellow)			
20	Outdoor unit operates.	Once	Lighted	Primary current protection	The input current exceeds 15A.	These symptoms do not mean any abnormality of the product, but check the following points. • Check if indoor filters are clogged. • Check if refrigerant is short. • Check if indoor/outdoor unit air circulation is short cycled.
				Secondary current protection	The current of the compressor exceeds 15A.	
21		Twice	Lighted	High-pressure protection	The indoor gas pipe temperature exceeds 113°F during heating.	
				Defrosting in cooling	The indoor gas pipe temperature falls 37.4°F or below during cooling.	
22		3 times	Lighted	Discharge temperature protection	The frequency of the compressor is kept 80Hz or more and the discharge temperature is kept under 122°F(COOL mode) /104°F(HEAT mode) for more than 40 minutes.	• Check refrigerant circuit and refrigerant amount. • Refer t1 11-6.Ⓓ "Check of LEV". • Refer to 11-6.Ⓔ "Check of outdoor thermistors".
23		4 times	Lighted	Low discharge temperature protection	The frequency of the compressor is kept 80Hz or more and the discharge temperature is kept under 102.2°F for more than 20 minutes.	• Refer to 11-6.Ⓓ "Check of LEV". • Check refrigerant circuit and refrigerant amount.
24		5 times	Lighted	Cooling high-pressure protection	The outdoor heat exchanger temperature exceeds 136.4°F during operation.	This symptom does not mean any abnormality of the product, but check the following points. • Check if indoor filters are clogged. • Check if refrigerant is short. • Check if indoor/outdoor unit air circulation is short cycled.
25	Outdoor unit operates normally.	9 times	Lighted	Inverter check mode	The unit is operated with emergency operation switch.	—
26		Lighted	Lighted	Normal	—	—

NOTE 1. The location of LED is illustrated at the right figure. Refer to 11-7.1.
2. LED is lighted during normal operation.

Outdoor electronic control P.C. board(Parts side)

MXZ-2B20NA

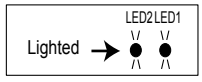

MXZ-3B24NA, MXZ-3B30NA
MXZ-4B36NA

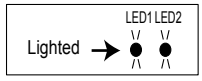

The flashing frequency shows the number of times the LED blinks after every 2.5-second OFF.
(Example) When the flashing frequency is “2”.

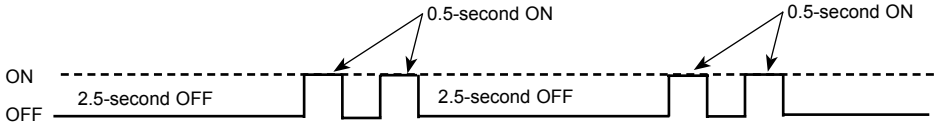

MXZ-5B

No.	Symptom	Indication		Abnormal point / Condition	Condition	Remedy
		LED1(Red)	LED2(Yellow)			
1	Outdoor unit does not operate.	Lighted	Once	LEV and drain pump	The indoor unit detects an abnormality in the LEV and drain pump.	• Refer to 11-6. Ⓓ "Check of LEV". • Check the drain pump of the indoor unit.
2		Lighted	Twice	Outdoor power system	Overcurrent protection cut-out operates 3 consecutive times, bus-bar voltage protection cut-out operates 3 consecutive times, or primary current protection cut-out operates 3 consecutive times within 1minute after the compressor gets started.	• Check the connection of the compressor connecting wire. • Refer to 11-6. Ⓔ "How to check inverter/ compressor". • Check the stop valve.
3		Lighted	3 times	Discharge temperature thermistor	A short circuit is detected in the thermistor during operation, or an open circuit is detected in the thermistor 10 minutes after compressor start-up.	• Refer to 11-6. Ⓕ "Check of outdoor thermistors".
4		Lighted	4 times	Fin temperature thermistor	A short or open circuit is detected in the thermistor during operation.	• Replace the outdoor power P.C. board .
				P.C board temperature thermistor		• Replace the outdoor power P.C. board .
5		Lighted	5 times	Ambient temperature thermistor	A short or open circuit is detected in the thermistor during operation.	• Refer to 11-6. Ⓕ "Check of outdoor thermistors".
				Outdoor heat exchanger temperature thermistor		
				Defrost thermistor		
6		Lighted	7 times	Nonvolatile memory data (Outdoor control P.C. board)	The nonvolatile memory data cannot be read properly.	• Replace the outdoor control P.C. board.
7		Lighted	8 times	Current sensor	Current sensor has been short or open circuited for 120 seconds.	• Replace the outdoor power P.C. board.
8		Lighted	11 times	Communication error between P.C. boards	Communication error occurs twice between the outdoor control P.C. board and outdoor power P.C. board for more than 10 seconds.	• Check the connecting wire between outdoor control P.C. board and outdoor power P.C. board.
9		Lighted	12 times	Zero cross detecting circuit	The protection cut-out of the zero cross detecting circuit operates 3 consecutive times.	• Check the connecting wire between outdoor control P.C. board and outdoor power P.C. board.
		Lighted	14 times	Nonvolatile memory data (outdoor power P.C. board)	The nonvolatile memory data cannot be read properly.	• Replace theoutdoor power P.C. board.
10	'Outdoor unit stops and restarts 3 minutes later' is repeated.	Twice	Not lighted	IPM protection	Overcurrent is detected when the frequency of the compressor is 1 Hz or less.	• Reconnect compressor connector. • Refer to 11-6. Ⓔ "How to check inverter/ compressor". • Check the stop valve. • Check the power module (PAM module).
				Overcurrent	Overcurrent is detected when the frequency of the compressor is more than 1 Hz.	
11		3 times	Not lighted	Discharge temperature protection	Discharge temperature exceeds 237.2°F during operation. Compressor can restart if discharge temperature thermistor reads 212°F or less 3 minutes later.	• Check the amount of gas and refrigerant circuit. • Refer to 11-6. Ⓓ "Check of LEV".
12		4 times	Not lighted	Fin temperature protection	The fin temperature exceeds 230°F during operation.	•Check refrigerant circuit and refrigerant amount.
				P.C. board temperature protection	The P.C. board temperature exceeds 203°F during operation.	
13		5 times	Not lighted	High-pressure protection	High-pressure is detected with the high-pressure switch (HPS) during operation.	• Check the amount of gas and the refrigerant circuit. • Check the stop valve.
					The outdoor heat exchanger temperature exceeds 158°F during cooling or indoor gas pipe temperature exceeds 158°F during heating.	
		7 times	Not lighted	Out-of-step protection	The waveform of compressor current is distorted.	• Reconnect connector of compressor. • Refer to 11-6. Ⓔ "How to check inverter/ compressor".
15		9 times	Not lighted	Bus-bar voltage protection	The bus-bar voltage exceeds 400 V or falls to 300 V or below while the compressor is operating.	• Check the voltage of power supply. • Replace the outdoor power P.C. board or the outdoor control P.C. board. • Refer to 11-6. Ⓙ "Check of bus-bar voltage".
		10 times	Not lighted	Zero cross loss	Zero cross signal cannot be detected while the compressor is operating.	
		11 times	Not lighted	Low out side temperature protection (cooling)	The ambient temperature became 10.4°F or less.	
		12 times	Not lighted	Primary current protection	The primary current exceeds 37 A for 10 seconds.	
16		13 times	Not lighted	Outdoor fan motor	The fan motor speed is 50 rpm or less or 1500 rpm or more for 1 minute, or the fan motor speed is 100 rpm or less for 15 seconds when the outside temperature is 68°F or more.	• Refer to 11-6. Ⓖ "Check of outdoor fan motor".

No.	Symptom	Indication		Abnormal point / Condition	Condition	Remedy
		LED1(Red)	LED2(Yellow)			
17	'Outdoor unit stops and restarts 3 minutes later' is repeated.	Lighted	8 times	Current sensor protection	After the operation starts, a short or open circuit is detected in the current sensor when the compressor is not operating.	• Replace the outdoor power P.C. board .
18		Lighted	11 times	Communication protection between P.C. boards	Communication error occurs between the outdoor control P.C. board and outdoor power P.C. board for more than 10 seconds.	• Check the connecting wire between outdoor control P.C. board and outdoor power P.C. board.
19		Lighted	12 times	Zero cross detecting circuit protection	Zero cross signal cannot be detected when the compressor begins operating.	• Check the connecting wire between outdoor control P.C. board and outdoor power P.C. board.
20	Outdoor unit operates	Once	Lighted	Primary current protection	The primary current exceeds 27A.	These symptoms do not mean any abnormality of the product, but check the following points. • Check indoor filters are not clogged. • Check there is sufficient refrigerant. • Check indoor/outdoor unit air circulation is not short cycling.
21		Twice	Lighted	High-pressure protection	The indoor heat exchanger exceeds 100.4°F during heating.	
				Defrosting in cooling	The indoor heat exchanger falls 37.4°F or below during cooling.	
22		3 times	Lighted	Discharge temperature protection	The discharge temperature exceeds 212°F during operation.	• Check refrigerant circuit and refrigerant amount. • Refer to 11-6. Ⓓ "Check of LEV".
23		4 times	Lighted	Low discharge temperature protection	The frequency of the compressor is kept 58 Hz or more and the discharge temperature is kept under 122°F (cooling) /104°F (heating) for more than 20 minutes	• Refer to 11-6. Ⓓ "Check of LEV". • Check refrigerant circuit and refrigerant amount.
24		5 times	Lighted	Cooling high-pressure protection	The outdoor heat exchanger temperature exceeds 129.2°F during operation.	This symptom does not mean any abnormality of the product, but check the following points. • Check indoor filters are not clogged. • Check there is sufficient refrigerant. • Check indoor/outdoor unit air circulation is short cycling.
		7 times	Lighted	High → Low Pressure bypass valve Cooling evaporating temperature drop prevention control	During cooling operation, the temperature of indoor heat exchanger becomes 37.4°F or less within 1 hour after the compressor starts running, or it becomes less than 53.6°F - 60.8°F* later than that. * It depends on the difference between the set temperature and the room temperature.	This symptom does not mean any abnormality of the product, but check the following points. • Check indoor filters are not clogged. • Check there is sufficient refrigerant. • Check indoor/outdoor unit air circulation is not short cycling.
25	Outdoor unit operates normally.	7 times	Lighted	High → Low pressure bypass valve High pressure protection control at start-up of heating operation	The room temperature is 75.2°F or more when 1 or 2 unit(s) start(s) the heating operation.	This symptom does not mean any abnormality of the product.
				High → Low pressure bypass valve Compressor oil tempering control at start-up of heating operation	Both the following are true: • The outside temperature is 28.4°F or less when the heating operation is started. • [(Discharge temperature) - (Indoor heat exchanger temperature)] < 41°F	
		8 times	Lighted	Cooling evaporating temperature protection	During cooling operation, the temperature of indoor heat exchanger becomes 44.6°F - 51.8°F* or less within 1 hour after the compressor starts running, or it becomes 48.2°F - 62.6°F* or less later than that. * It depends on the indoor unit type/model or the difference between the set temperature and the room temperature.	
		9 times	Lighted	Inverter check mode	The connector of compressor is disconnected. Inverter check mode starts.	• Check the connector of the compressor is correctly connected. • Refer to 11-6. Ⓔ "How to check inverter/ compressor".
26		Lighted	Lighted	Normal		

NOTE 1. The location of LED is illustrated at the right figure. Refer to 11-7.3.
2. LED is lighted during normal operation.

Outdoor control P.C. board (Parts side)

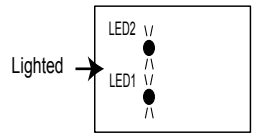

The flashing frequency shows the number of times the LED blinks after every 2.5-second OFF.
(Example) When the flashing frequency is “2”.

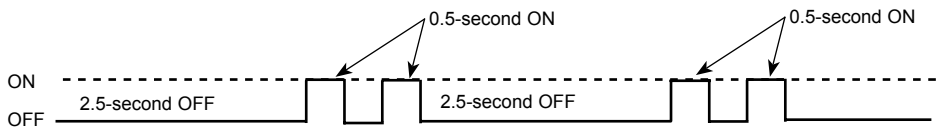

11-5. TROUBLE CRITERION OF MAIN PARTS

MXZ-2B20NA MXZ-3B24NA MXZ-3B30NA MXZ-4B36NA MXZ-5B42NA

<table>
<tr><th>Part name</th><th>Check method and criterion</th></tr>
<tr><td>Defrost thermistor (RT61)
Fin temperature thermistor (RT64)
MXZ-2B/3B/4B
Ambient temperature thermistor (RT65)
Outdoor heat exchanger temperature thermistor (RT68)</td><td>Measure the resistance with a tester.

Refer to 11-7. “Test point diagram and voltage”,1. “Electronic control P.C. board”, 2.”Outdoor control P.C.board”, 4. “Power board”, or 5.”Outdoor power P.C. board”, for the chart of thermistor.</td></tr>
<tr><td>Discharge temperature thermistor (RT62)</td><td>Measure the resistance with a tester.
Before measurement, hold the thermistor with your hands to warm it up.
Refer to 11-7. “Test point diagram and voltage”,1. “Electronic control P.C. board”, or 2.”Outdoor control P.C. board”, for the chart of thermistor.</td></tr>
<tr><td>Compressor
 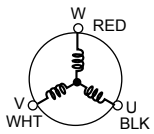
</td><td>Measure the resistance between terminals using a tester.
(Winding temperature: 14°F ~ 104°F)
<table>
<tr><th colspan="3">Normal (Each phase)</th></tr>
<tr><th>MXZ-2B20NA</th><th>MXZ-3B24NA MXZ-3B30NA MXZ-4B36NA</th><th>MXZ-5B42NA</th></tr>
<tr><td>0.86 Ω ~ 1.06 Ω</td><td>1.29 Ω ~ 1.49 Ω</td><td>0.47Ω ~ 0.57 Ω</td></tr>
</table></td></tr>
<tr><td>Outdoor fan motor
MXZ-2B/3B/4B
 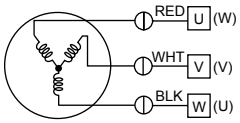
</td><td>Measure the resistance between lead wires using a tester.
(Part temperature: 14°F ~ 104°F)
<table>
<tr><th colspan="2">Normal (Each phase)</th></tr>
<tr><th>MXZ-2B20NA</th><th>MXZ-2B20NA -1 MXZ-3B24NA MXZ-3B30NA MXZ-4B36NA</th></tr>
<tr><td>13.4 Ω ~ 16.4 Ω</td><td>13 Ω ~ 16 Ω</td></tr>
</table></td></tr>
<tr><td>Outdoor fan motor
MXZ-5B</td><td>• Refer to 11-6.Ⓖ.</td></tr>
<tr><td>R.V. coil</td><td>Measure the resistance using a tester. (Part temperature: 14°F ~ 104°F)
<table>
<tr><th colspan="2">Normal</th></tr>
<tr><th>MXZ-2B20NA MXZ-2B20NA -1 MXZ-3B24NA MXZ-3B30NA MXZ-4B36NA</th><th>MXZ-5B42NA</th></tr>
<tr><td>1.2 Ω ~ 1.56 Ω</td><td>1.26 Ω ~ 1.62 Ω</td></tr>
</table></td></tr>
<tr><td>Solenoide coil
MXZ-5B</td><td>Measure the resistance using a tester. (Part temperature: 14°F ~ 104°F)
<table>
<tr><th>Normal</th></tr>
<tr><th>MXZ-5B42NA</th></tr>
<tr><td>1.17 Ω ~ 1.43 Ω</td></tr>
</table></td></tr>
<tr><td>Linear expansion valve
MXZ-2B
 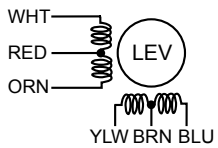

The other models
 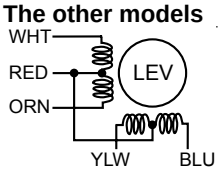
</td><td>Measure the resistance using a tester. (Part temperature: 14°F ~ 104°F)
<table>
<tr><th colspan="2">Color of lead wire</th><th rowspan="2">Normal</th></tr>
<tr><th>MXZ-2B20NA</th><th>MXZ-2B20NA -1
MXZ-3B24NA
MXZ-3B30NA
MXZ-4B36NA
MXZ-5B42NA</th></tr>
<tr><td>WHT - RED</td><td>WHT - RED</td><td rowspan="4">37.4 Ω ~ 53.9 Ω</td></tr>
<tr><td>RED - ORN</td><td>RED - ORN</td></tr>
<tr><td>YLW - BRN</td><td>YLW - RED</td></tr>
<tr><td>BRN - BLU</td><td>RED - BLU</td></tr>
</table></td></tr>
<tr><td>High pressure switch (HPS)
MXZ-3B/4B/5B</td><td>
<table>
<tr><th colspan="2">Pressure</th><th>Normal</th></tr>
<tr><td rowspan="2">HPS</td><td>537 ± 22 PSIG</td><td>Close</td></tr>
<tr><td>696^{+7}_{-15} PSIG</td><td>Open</td></tr>
</table></td></tr>
</table>

11-6. TROUBLESHOOTING FLOW

MXZ-2B20NA MXZ-3B24NA MXZ-3B30NA MXZ-4B36NA

Outdoor unit does not operate.

Ⓐ Check of power supply

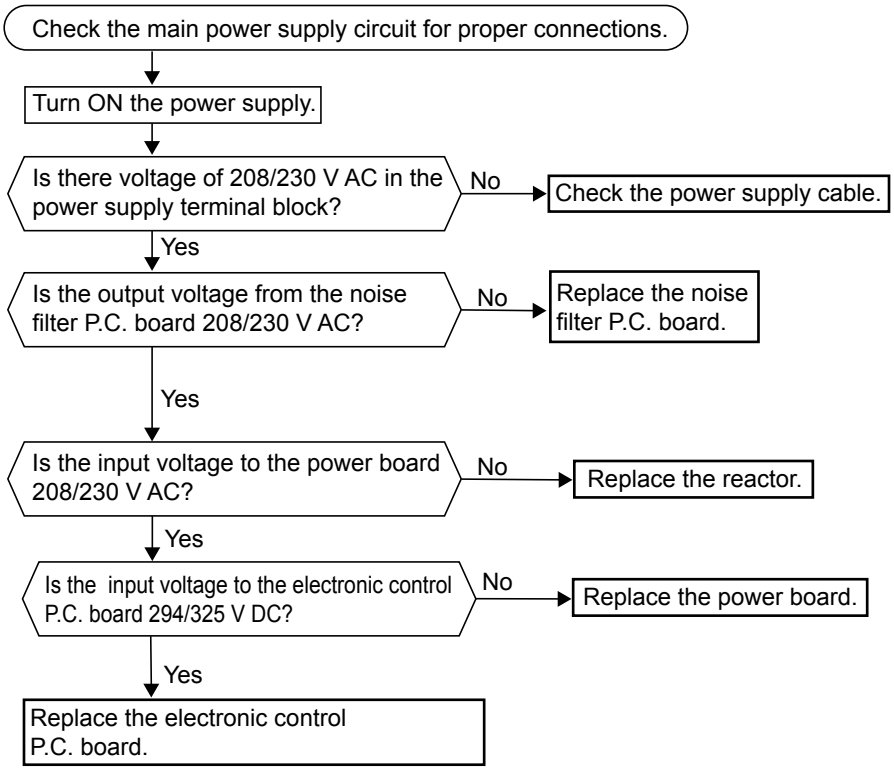

MXZ-5B42NA

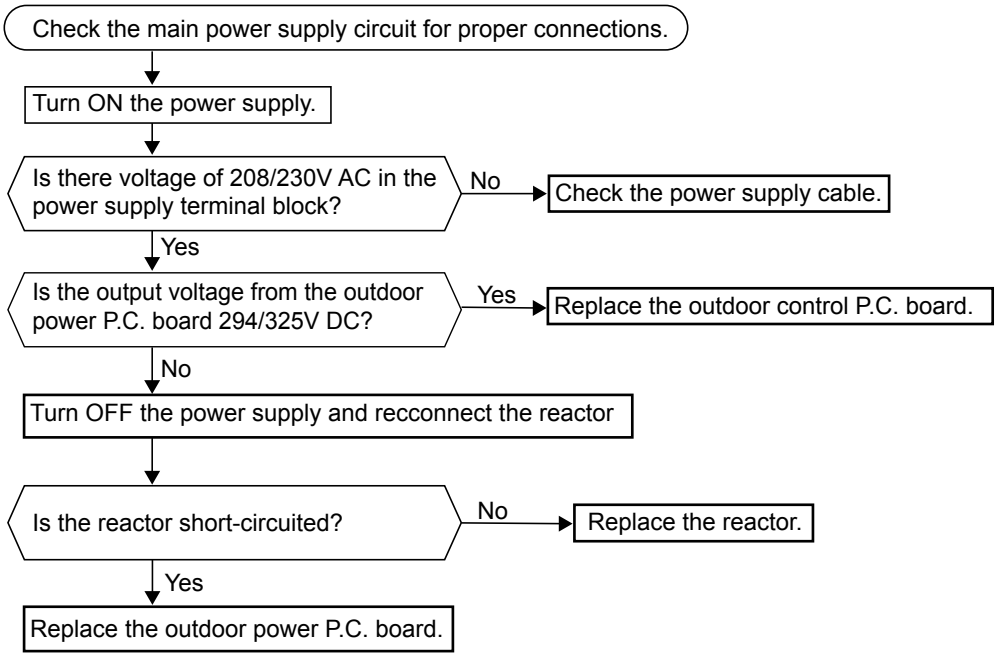

- **When unit cannot operate neither by the remote controller nor by EMERGENCY OPERATION switch. Indoor unit does not operate.**
- **When OPERATION INDICATOR lamp flashes ON and OFF in every 0.5-second. Outdoor unit does not operate.**

Ⓑ How to check mis-wiring and serial signal error

LED indication for communication status

Communication status is indicated by the LED.

Unit status
Blinking: normal communication
Lighting: abnormal communication or not connected

Pattern 1 and 2 is repeatedly displayed alternately. Each pattern is displayed for 15 seconds.

NOTE: "Lighting" in the table below does not indicate abnormal communication.

MXZ-2B20NA

Outdoor electronic control P.C. board
(Parts side)

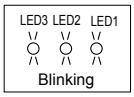

Pattern	LED 3	LED 2	LED 1
1	Lighting	Unit B status	Unit A status
2	Goes out	Lighting	Unit C status

MXZ-3B24NA MXZ-3B30NA
MXZ-4B36NA

Outdoor electronic control P.C. board
(Parts side)

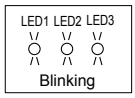

Pattern	LED 1	LED 2	LED 3
1	Unit A status	Unit B status	Unit C status
2	Unit D status	Lighting	Goes out

MXZ-5B42NA

Outdoor control P.C. board

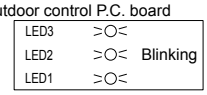

Pattern	LED 1	LED 2	LED 3
1	Unit A status	Unit B status	Lighted
2	Unit C status	Unit D status	Not lighted
3	Unit E status	Unit F status	Blinking

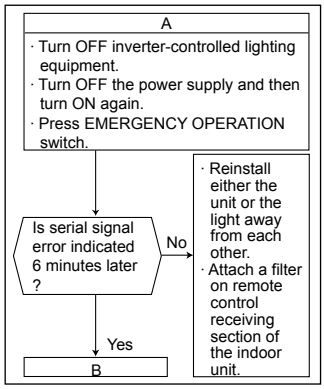

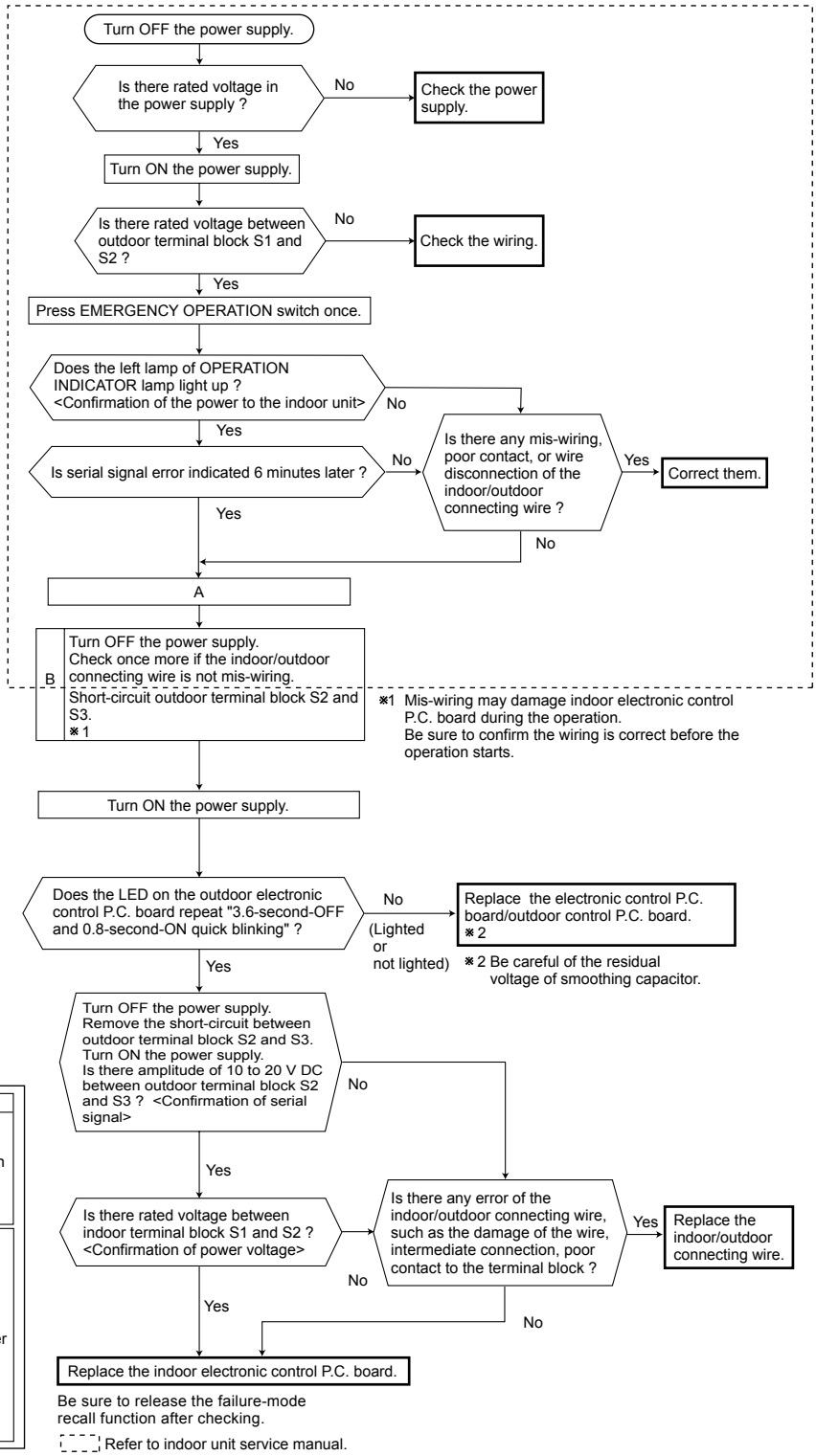

The cooling operation or heating operation does not operate.

Ⓒ Check of R.V. coil

MXZ-2B20NA MXZ-3B24NA MXZ-3B30NA MXZ-4B36NA

CN912	Noise filter P.C. board
CN781	Electronic control P.C. board

• When heating operation does not work.

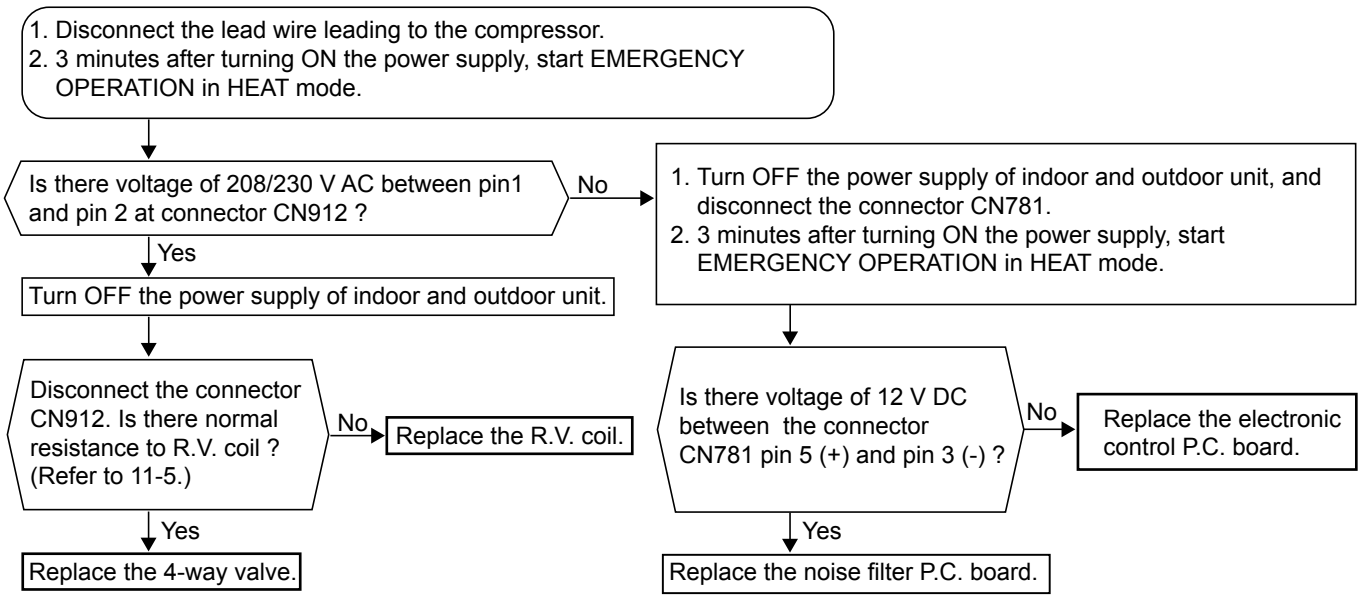

• When cooling operation does not work.

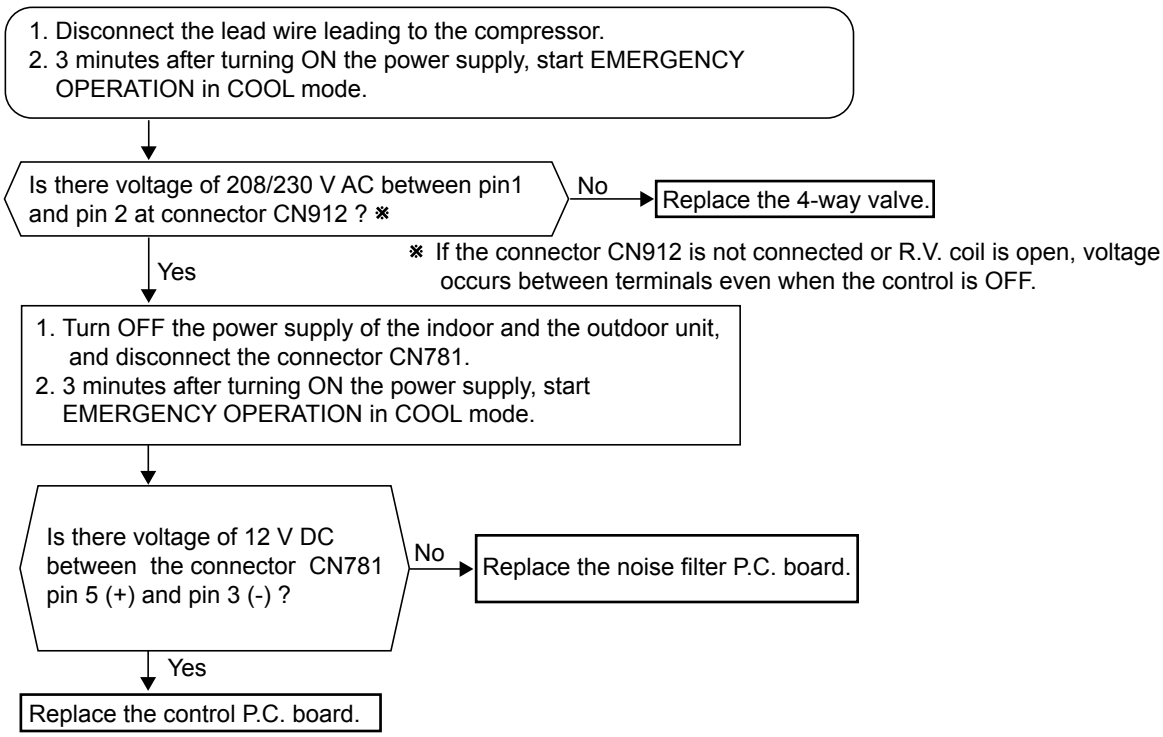

MXZ-5B42NA

- **When heating operation does not work.**

CN711 CN712	Outdoor control P.C. board

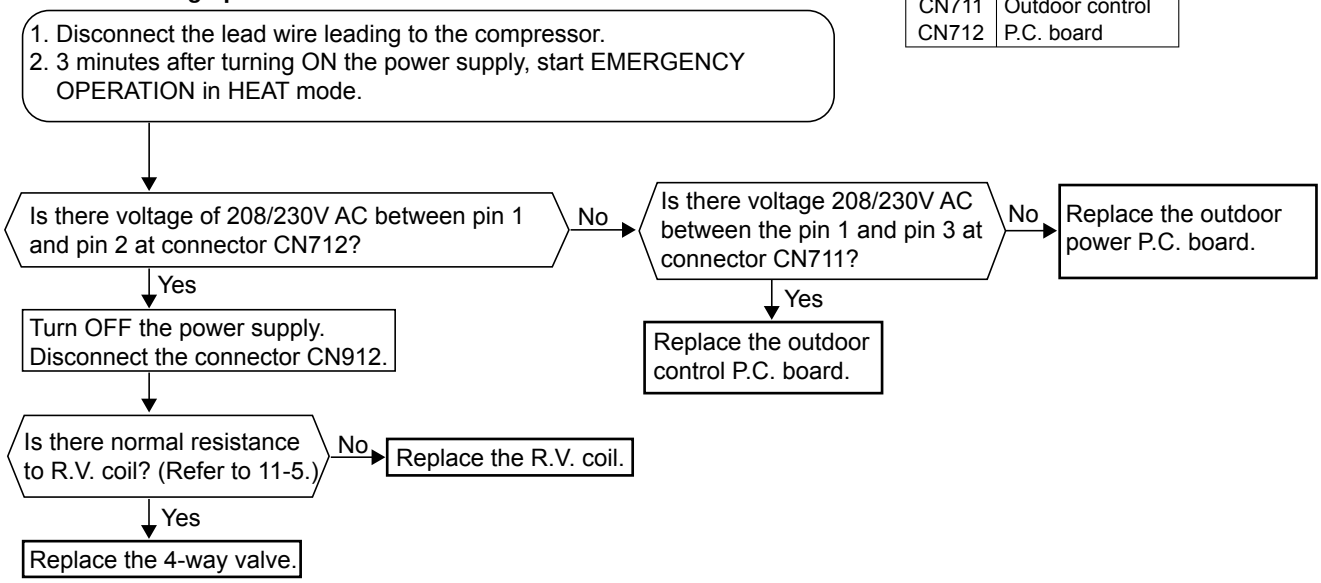

- **When cooling operation does not work.**

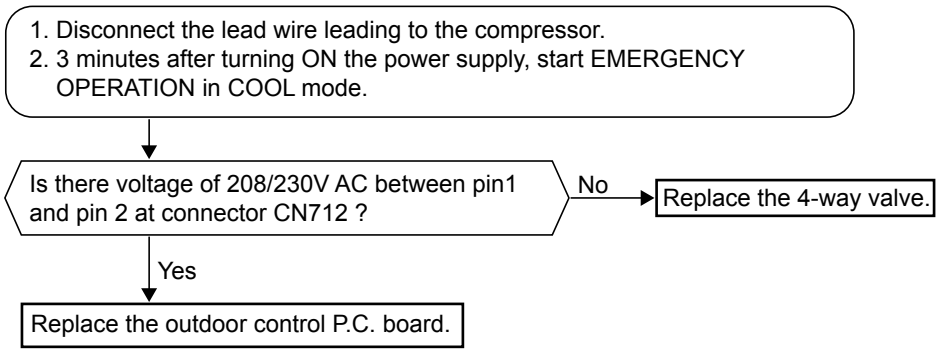

- **When cooling, heat exchanger of non-operating indoor unit frosts.**
- **When heating, non-operating indoor unit gets warm.**

Ⓓ Check of LEV

	MXZ-2B/ 3B/4B	MXZ-5B
CN791 CN792 CN793 CN794 CN795 CN796 CN797	Electronic control P.C. board	Outdoor control P.C. board

Turn ON the power supply to the outdoor unit after checking LEV coil is mounted to the LEV body securely.

↓

Is "click - click" sound heard ?
Or, do you feel vibration of LEV coil with your hand ?

→ Yes → Normal

↓ No

Disconnect the connectors.
MXZ-2B
CN791: LEV A, CN792: LEV B, CN795: LEV E
MXZ-3B/4B/5B
CN791: LEV A, CN792: LEV B, CN793: LEV C, CN794: LEV D **(MXZ-4B/5B)**, CN795: LEV E **(MXZ-5B)**, CN796: LEV F **(MXZ-3B/4B)**, CN797: LEV M **(MXZ-5B)**
Is there normal resistance to LEV coil ?
(Refer to 11-5.)

→ Yes → Replace the electronic control P.C. board/outdoor control P.C. board..

↓ No

Replace LEV coil.

- **When heating, room does not get warm.**
- **When cooling, room does not get cool.**

Ⓔ How to check inverter/compressor

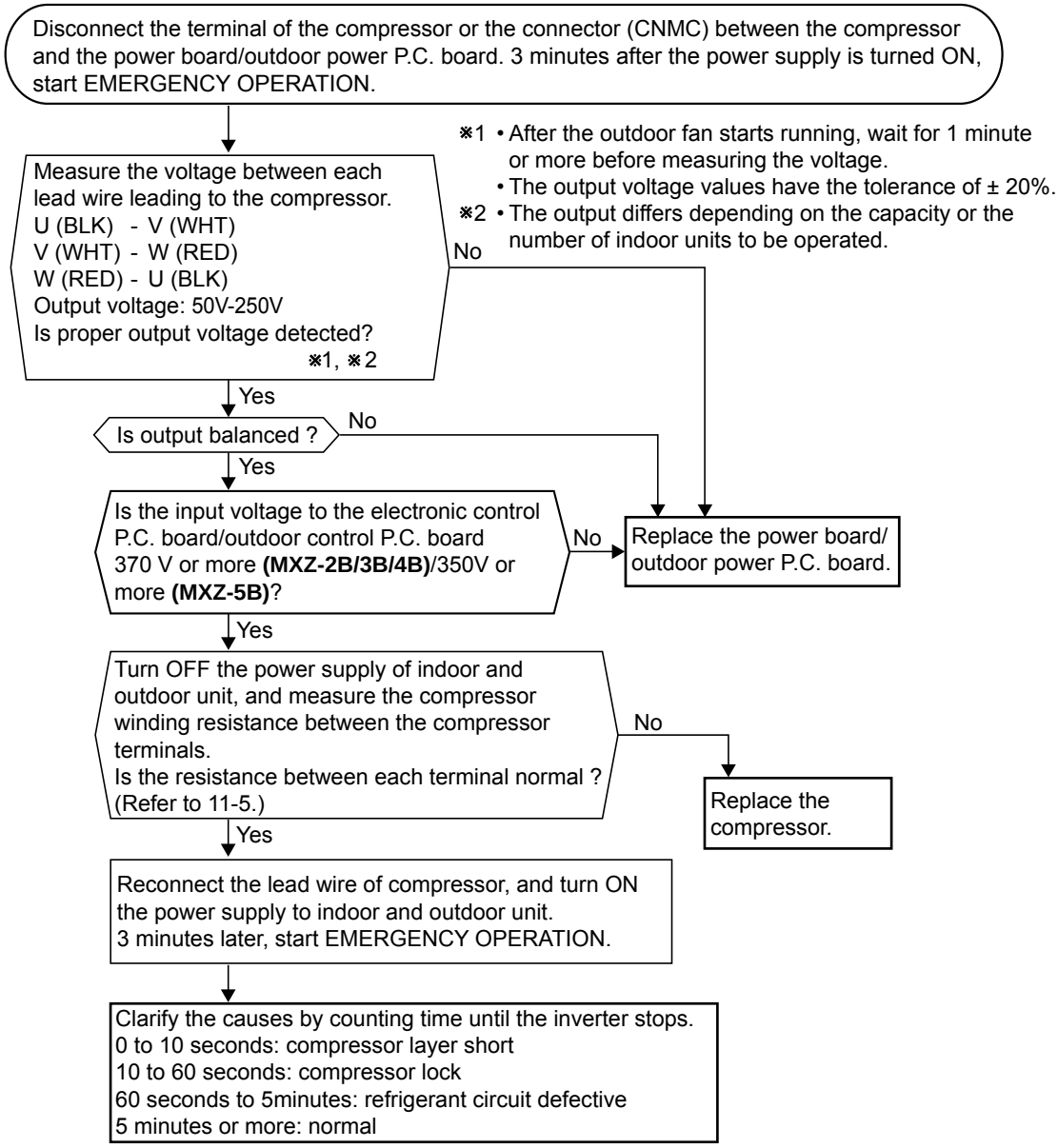

• **When thermistor is abnormal.**

Ⓕ Check of outdoor thermistors

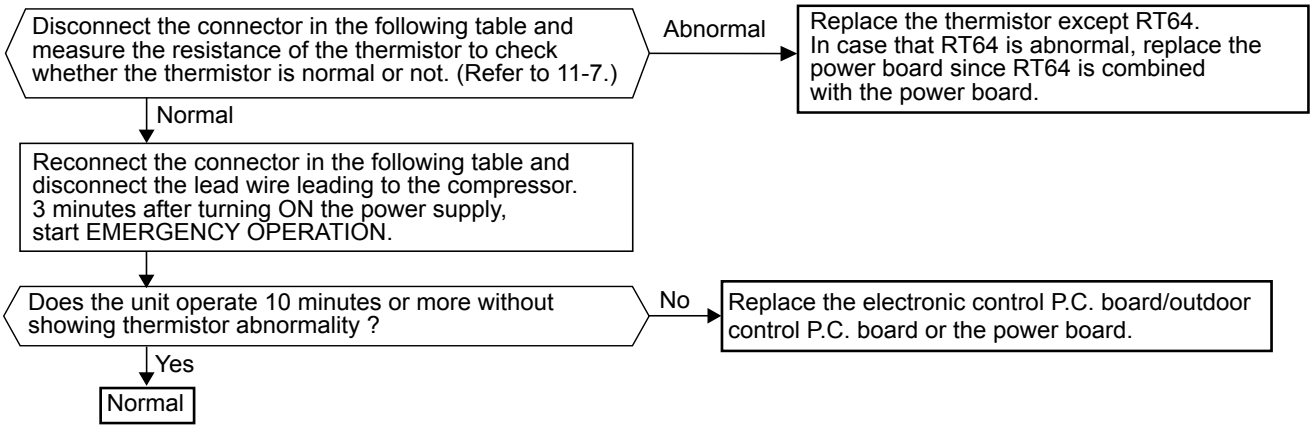

MXZ-2B20NA MXZ-3B24NA MXZ-3B30NA MXZ-4B36NA

Thermistor	Symbol	Connector, Pin No.	Board
Defrost	RT61	Between CN661 pin1 and pin2	Electronic control P.C. board
Discharge temperature	RT62	Between CN661 pin3 and pin4	
Outdoor heat exchanger temperature	RT68	Between CN661 pin7 and pin8	
Ambient temperature	RT65	Between CN663 pin1 and pin2	
Fin temperature	RT64	Between CN3 pin1 and pin2	Power board

MXZ-5B42NA

Thermistor	Symbol	Connector, Pin No.	Board
Defrost	RT61	Between CN661 pin1 and pin2	Outdoor control P.C. board
Discharge temperature	RT62	Between CN661 pin3 and pin4	
Outdoor heat exchanger temperature	RT68	Between CN661 pin5 and pin6	
Ambient temperature	RT65	Between CN663 pin1 and pin2	

• **Fan motor does not operate or stops operating shortly after starting the operation.**

Ⓖ Check of outdoor fan motor

MXZ-2B20NA MXZ-3B24NA MXZ-3B30NA MXZ-4B36NA

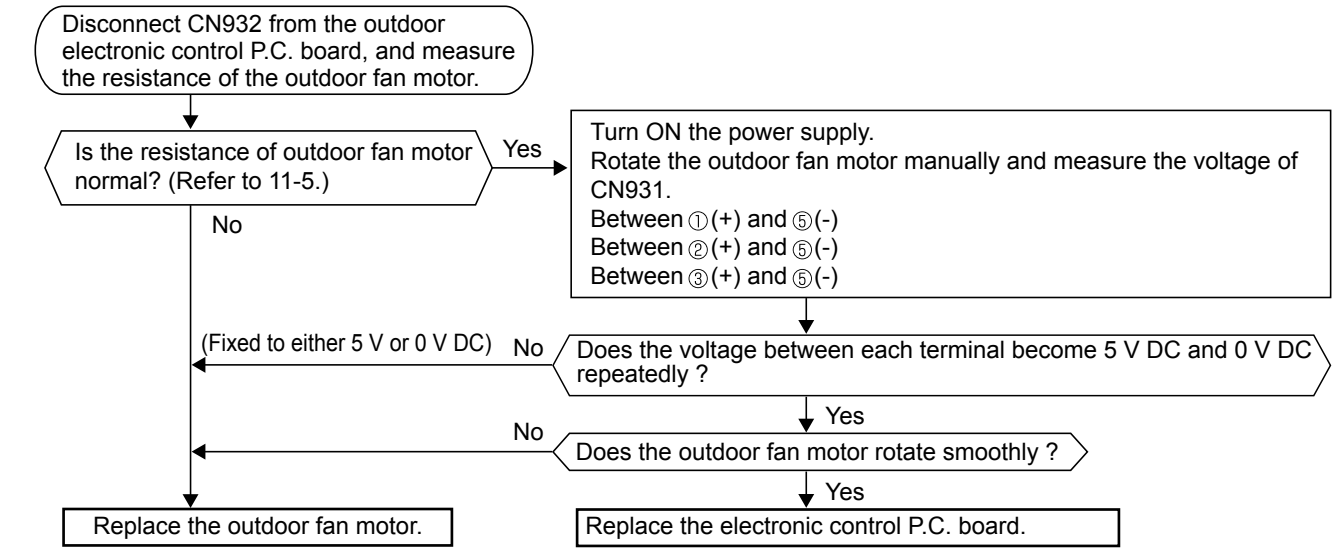

MXZ-5B42NA

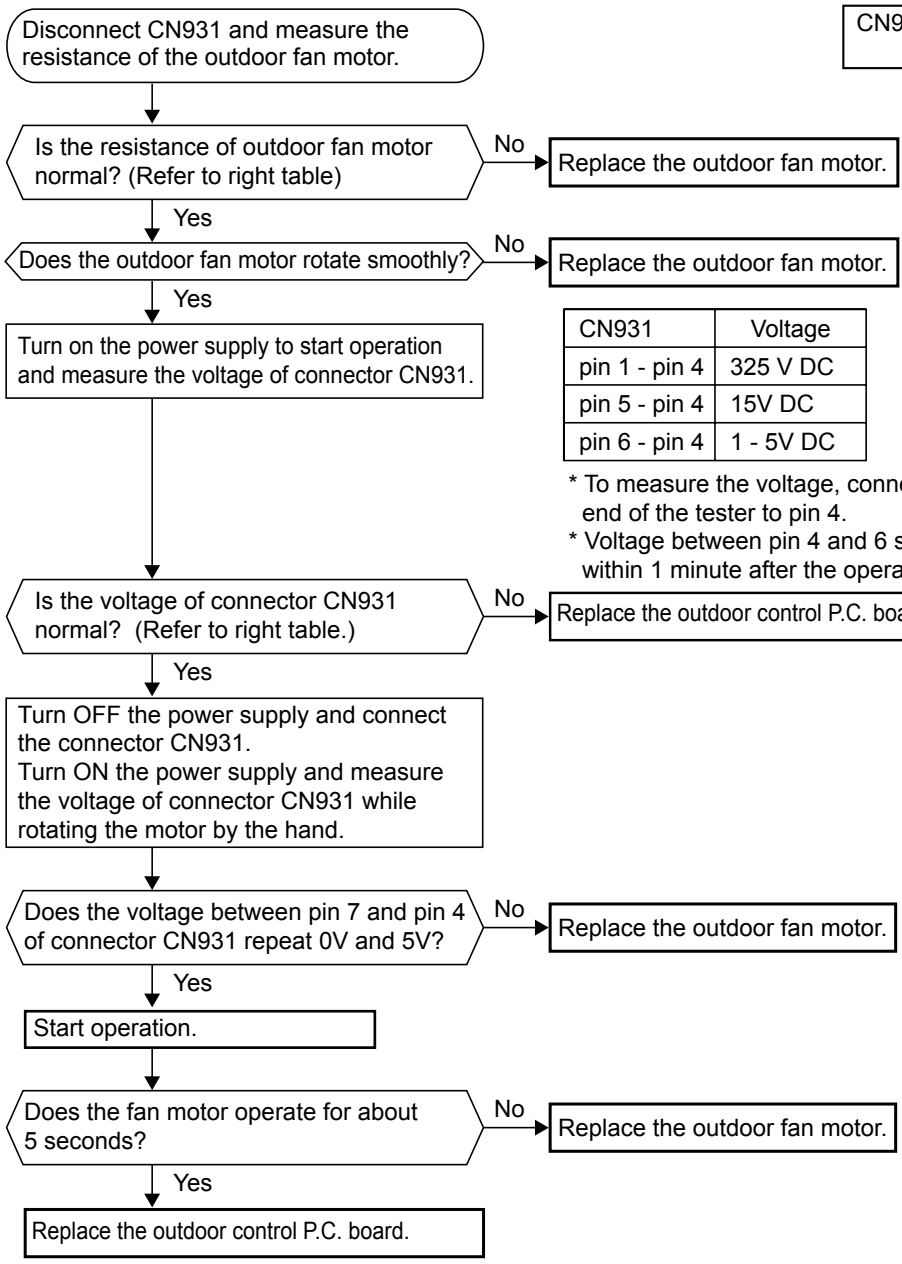

CN931	Outdoor control P.C. board

Measuring points	Resistance
pin 1 - pin 4	∞
pin 5 - pin 4	60 kΩ
pin 6 - pin 4	160 kΩ
pin 7 - pin 4	∞

* To measure the resistance, connect the negative (-) end of the tester to pin 4.

CN931	Voltage
pin 1 - pin 4	325 V DC
pin 5 - pin 4	15V DC
pin 6 - pin 4	1 - 5V DC

* To measure the voltage, connect the negative (-) end of the tester to pin 4.
* Voltage between pin 4 and 6 should be measured within 1 minute after the operation starts.

• **When the operation frequency does not go up from the lowest frequency.**

Ⓗ Check of HPS

	MXZ-3B/4B	MXZ-5B
CN681	Electronic control P.C. board	Outdoor control P.C. board

MXZ-3B24NA MXZ-3B30NA MXZ-4B36NA MXZ-5B42NA

1. Disconnect the connector CN681 in the electronic control P.C. board.
2. Check the resistance of HPS after 1 minute has passed since the outdoor unit power supply was turned OFF.

↓

Check the resistance between each terminal.
- Infinity → Replace HPS.
- 0 Ω ↓

Reconnect CN681.
Turn ON the power supply to the indoor and outdoor unit.
3 minutes later, start EMERGENCY OPERATION.

↓

Is HPS protection displayed immediately after compressor starts ?
- Yes → Replace the electronic control P.C. board/outdoor control P.C. board.
- No ↓ Normal

Ⓘ The other cases

Indoor unit does not operate. (different operating models in multi system)

- When you try to run two indoor units simultaneously, one for cooling and the other for heating, the unit which transmits signal to the outdoor units first decides the operation mode.
- When the above situation occurs, set all the indoor units to the same mode, turn OFF the indoor units, and then turn them back ON.
- Though the top of the indoor unit sometimes gets warm, this does not mean malfunction. The reason is that the refrigerant gas continuously flows into the indoor unit even while it is not operating.

Ⓙ Check of bus-bar voltage

MXZ-2B/3B/4B

•Check the voltage of power supply.
•Confirm outdoor unit failure mode recall function. (Refer to 11-2.2.)

↓

Confirm LED1 indication lamp on the outdoor electronic control P.C. board.

- Blink 5 times → Replace the power board. ※ → Turn ON power supply. Start operation. → Confirm LED1 indication lamp on the electronic control P.C. board.
  - Lighting → Normal
  - Blink 9 times → Replace the electronic control P.C. board. ※
- Blink 6 times → Replace the electronic control P.C. board. ※
- Lighting → Replace the electronic control P.C. board. ※ → Turn ON power supply. Start operation. → Confirm LED1 indication lamp on the electronic control P.C. board.
  - Lighting → Normal
  - Blink 9 times → Replace the power board. ※

※ Turn OFF power supply before removing P.C. board.

11-7. TEST POINT DIAGRAM AND VOLTAGE

1. Electronic control P.C. board

MXZ-2B20NA

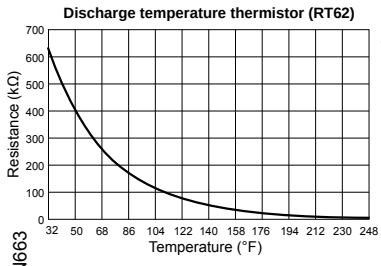

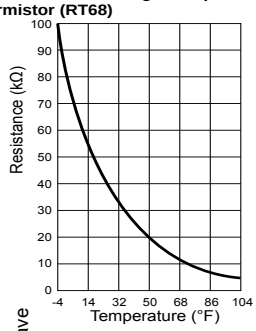

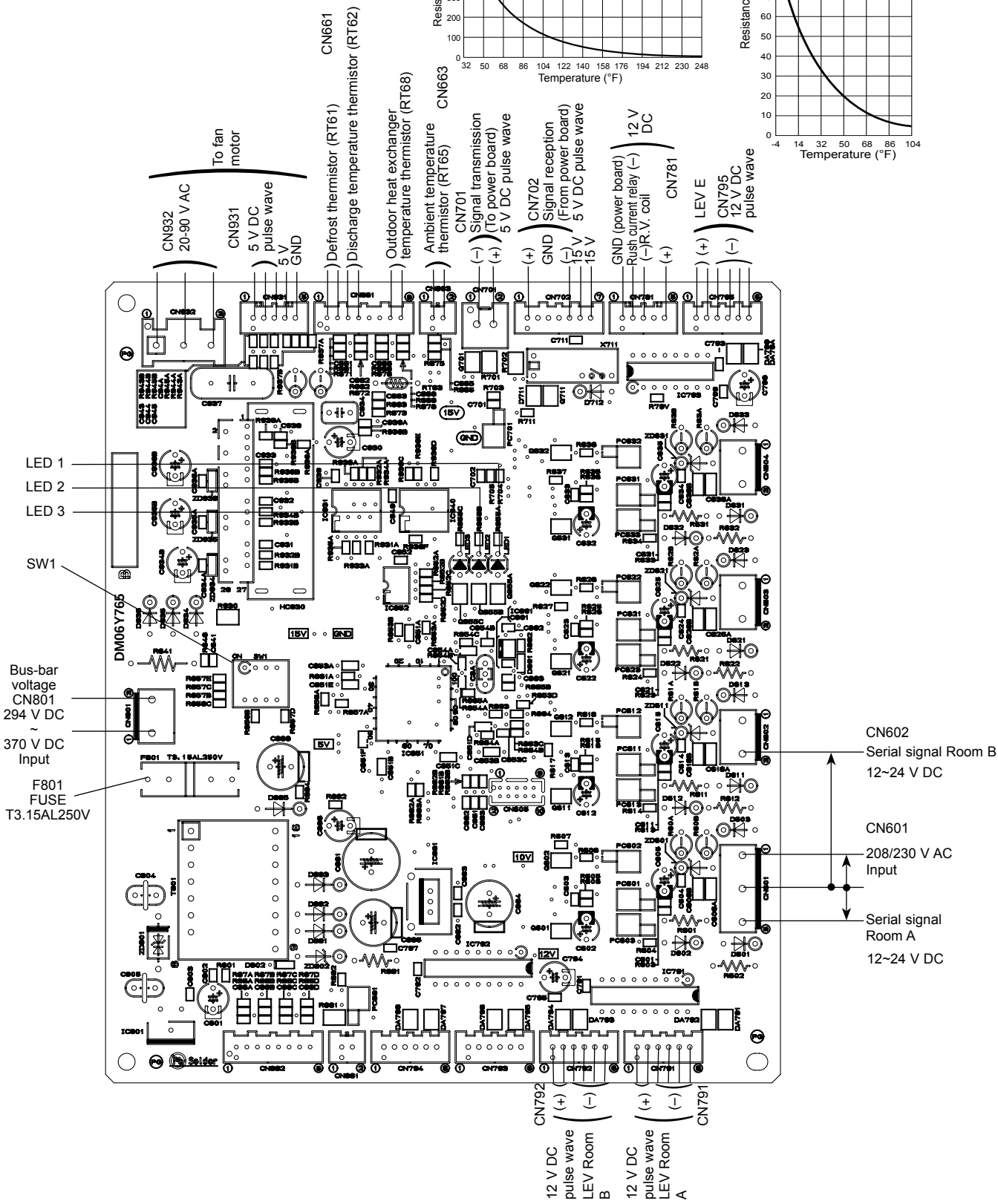

MXZ-3B24NA MXZ-3B30NA MXZ-4B36NA

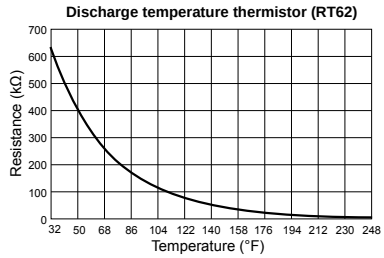

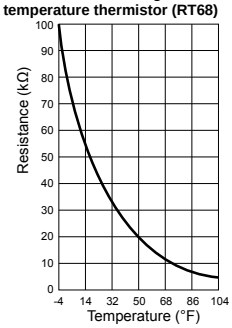

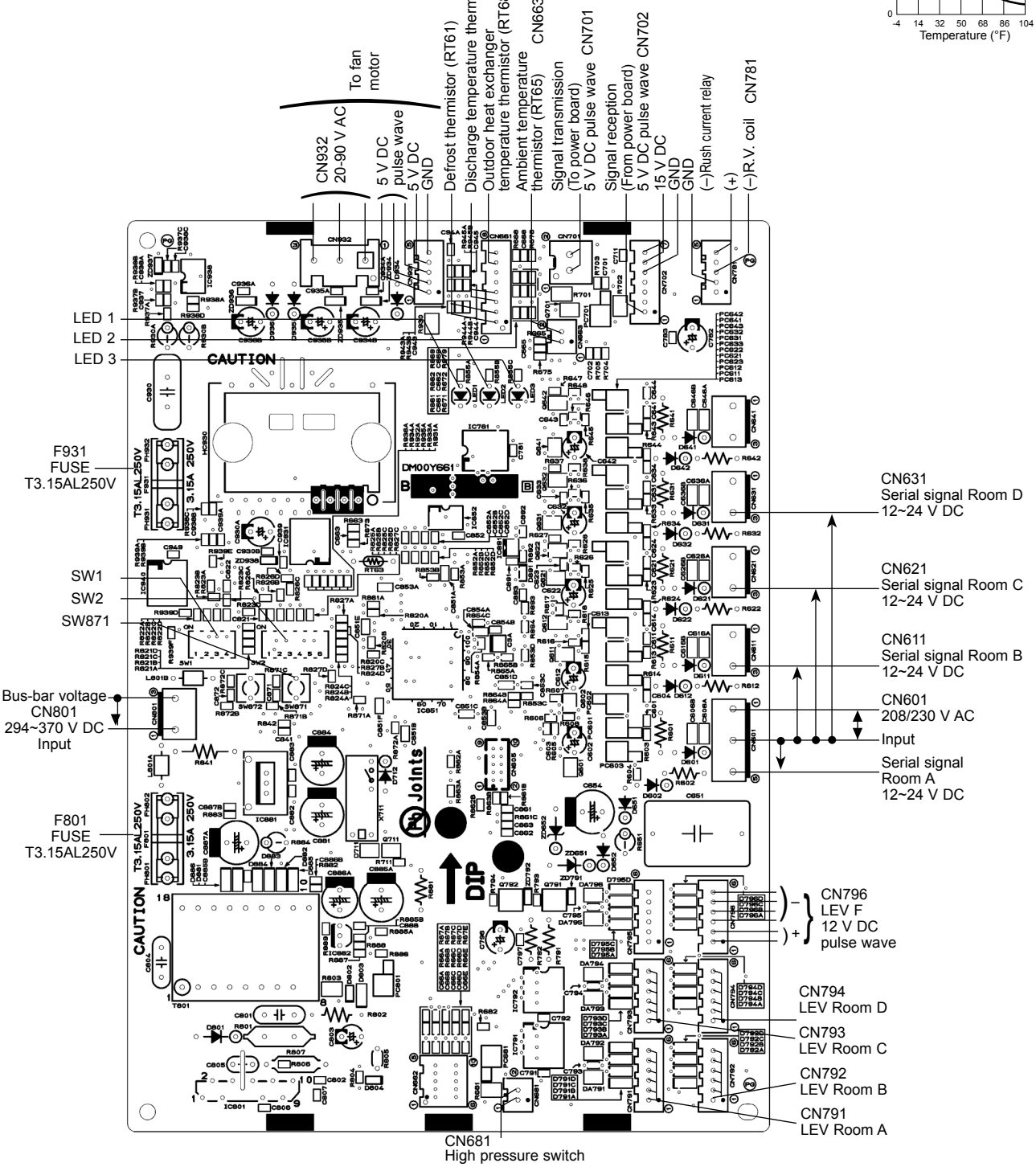

2. Outdoor control P.C. board

MXZ-5B42NA

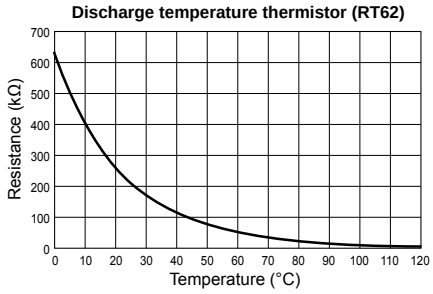

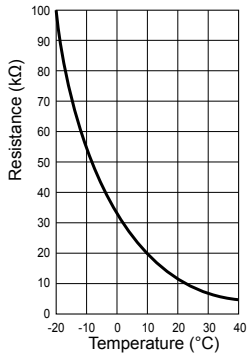

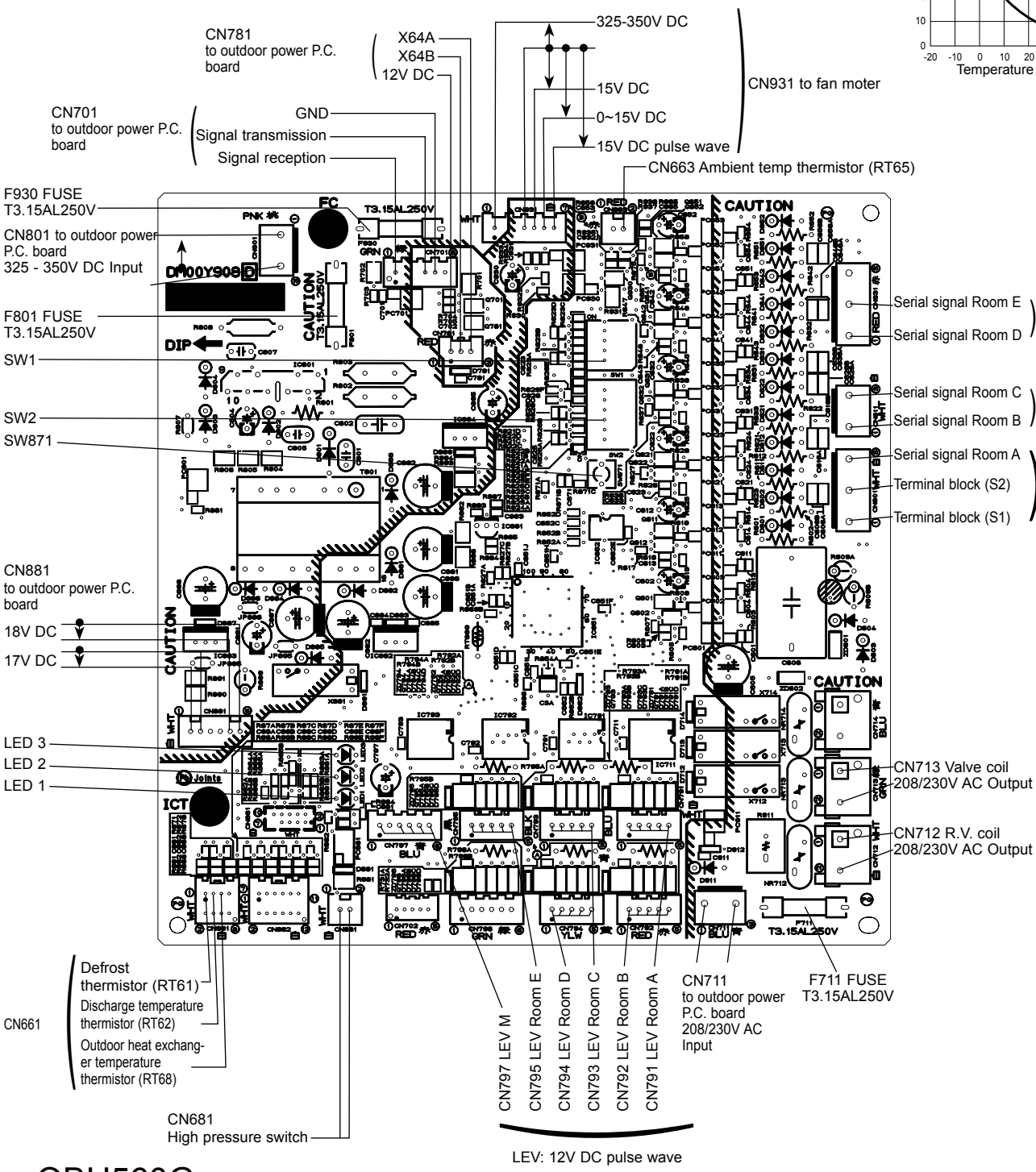

3. Noise filter P.C. board

MXZ-2B20NA

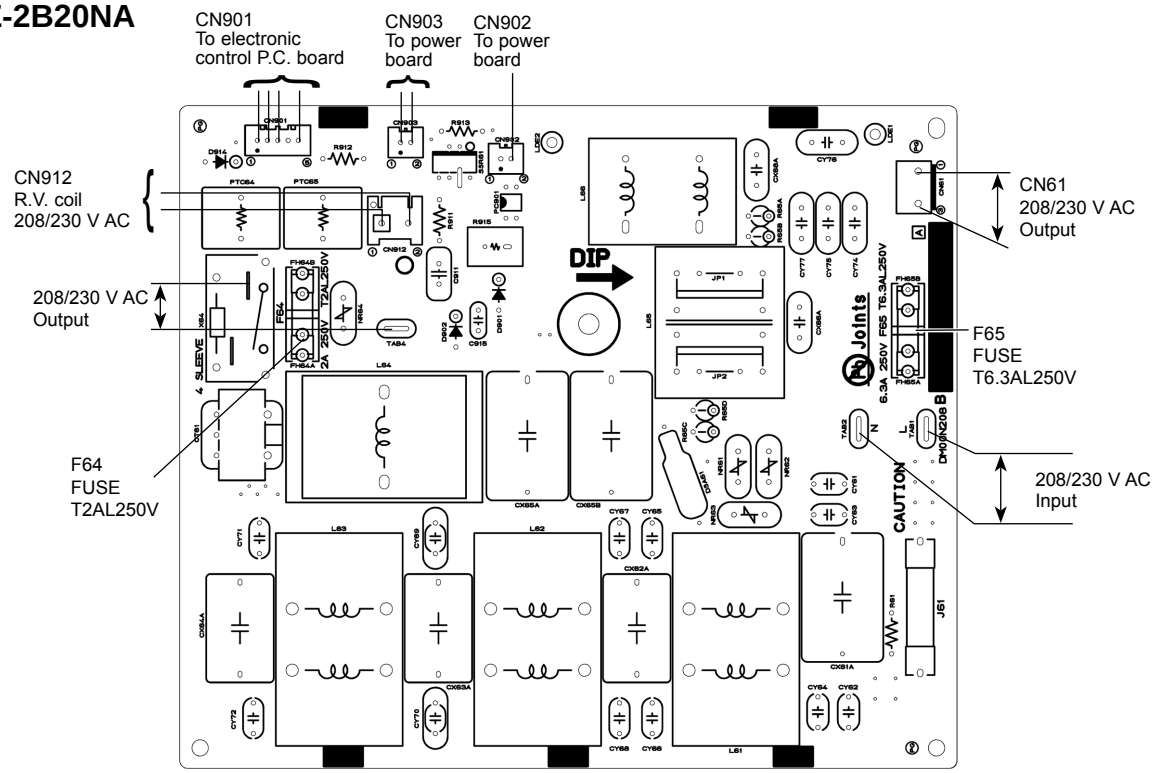

MXZ-3B24NA MXZ-3B30NA MXZ-4B36NA

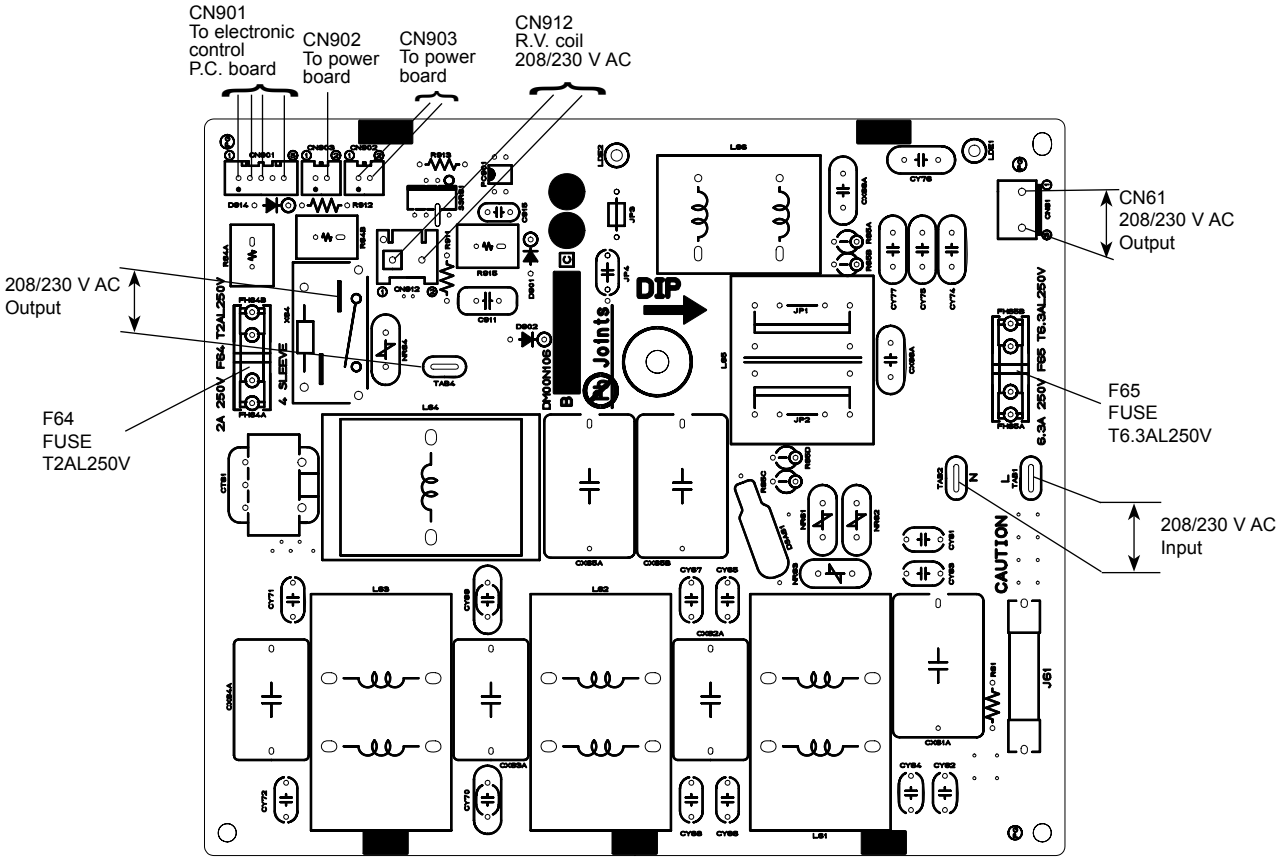

4. Power board

MXZ-2B20NA

Fin temperature thermistor (RT64)

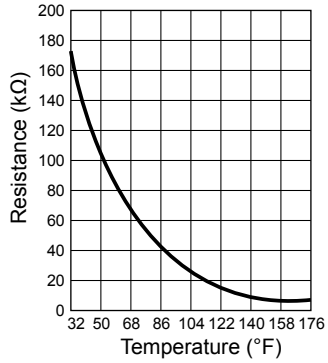

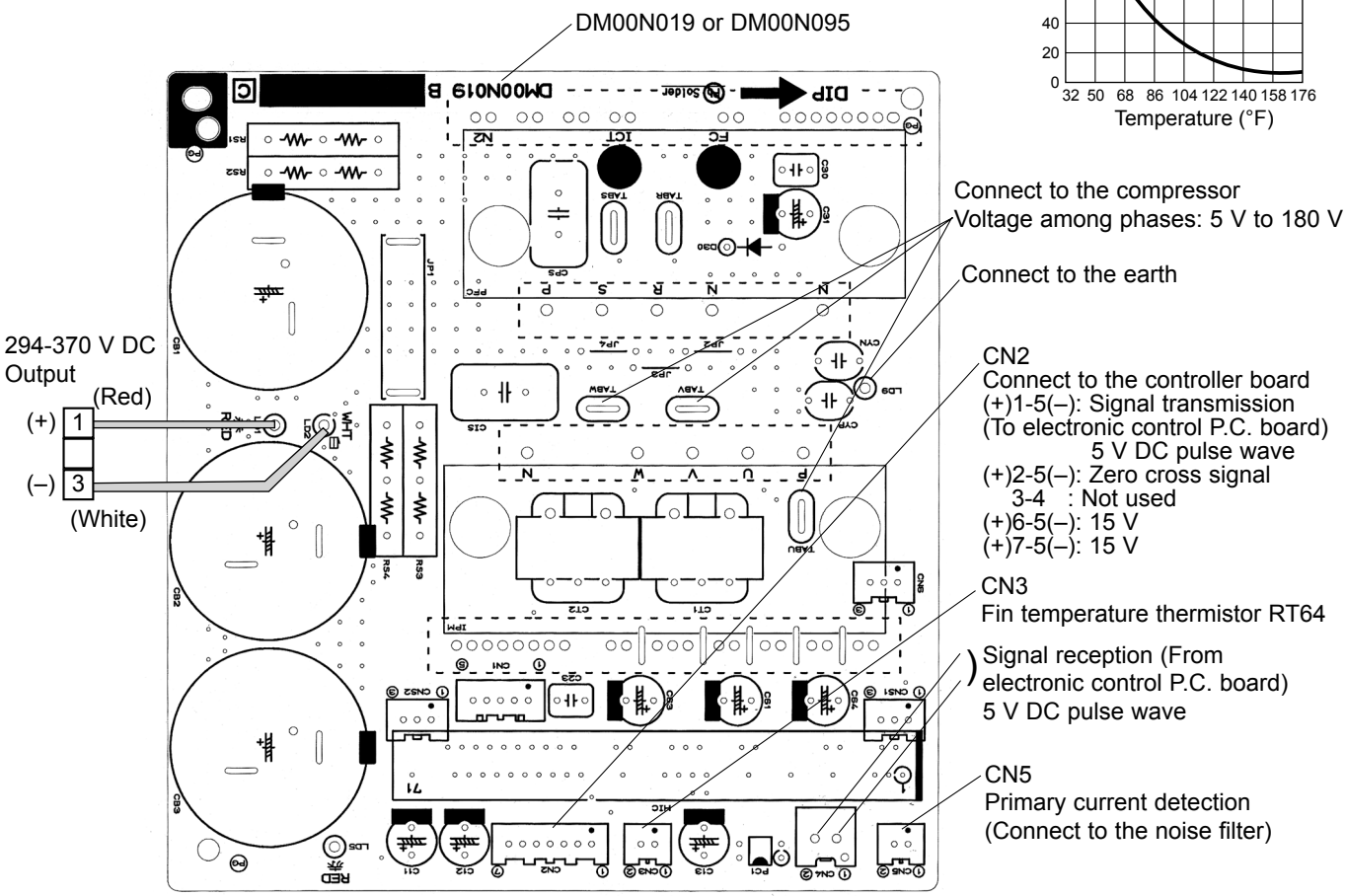

MXZ-3B24NA MXZ-3B30NA MXZ-4B36NA

Fin temperature thermistor (RT64)

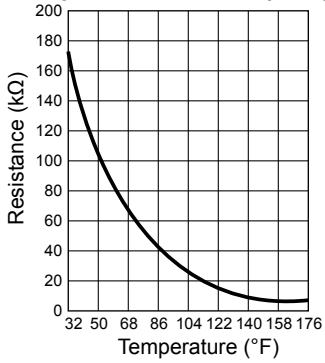

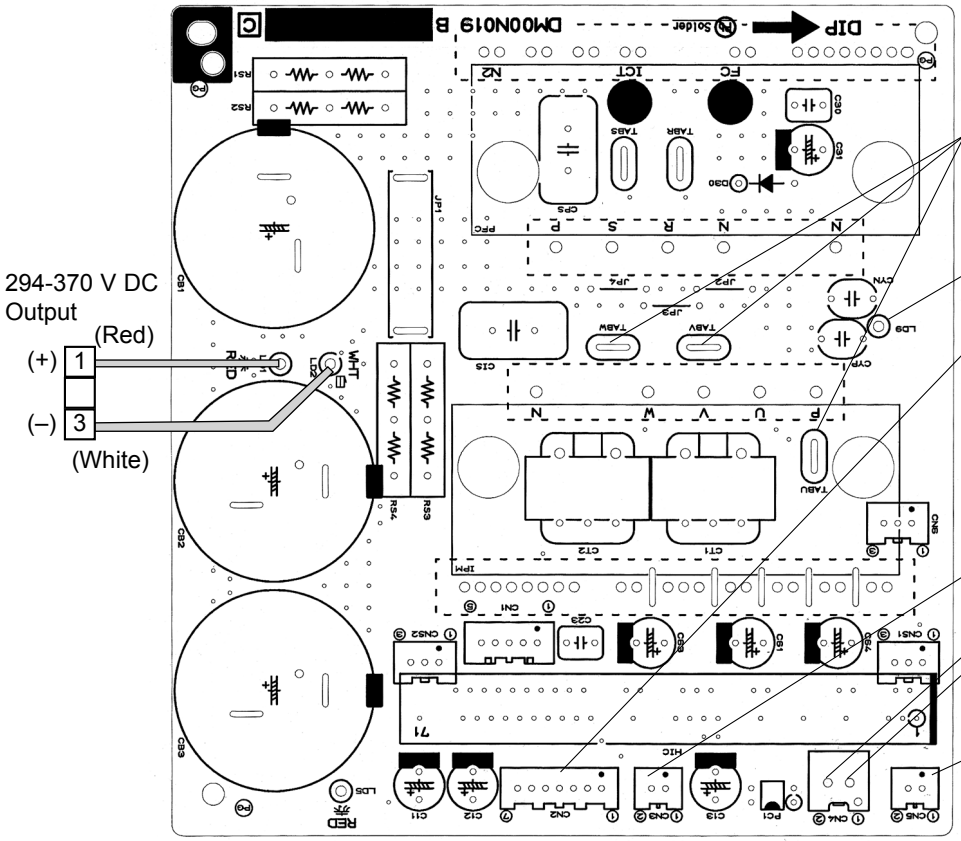

Connect to the compressor
Voltage among phases: 5 V to 180 V

Connect to the earth

CN2
Connect to the controller board
(+)1-5(–): Signal transmission
(To electronic control P.C. board)
5 V DC pulse wave
(+)2-5(–): Zero cross signal
3-4 : Not used
(+)6-5(–): 15 V
(+)7-5(–): 15 V

CN3
Fin temperature thermistor RT64

Signal reception (From
electronic control P.C. board)
5 V DC pulse wave

CN5
Primary current detection
(Connect to the noise filter)

5. Outdoor power P.C. board

MXZ-5B42NA

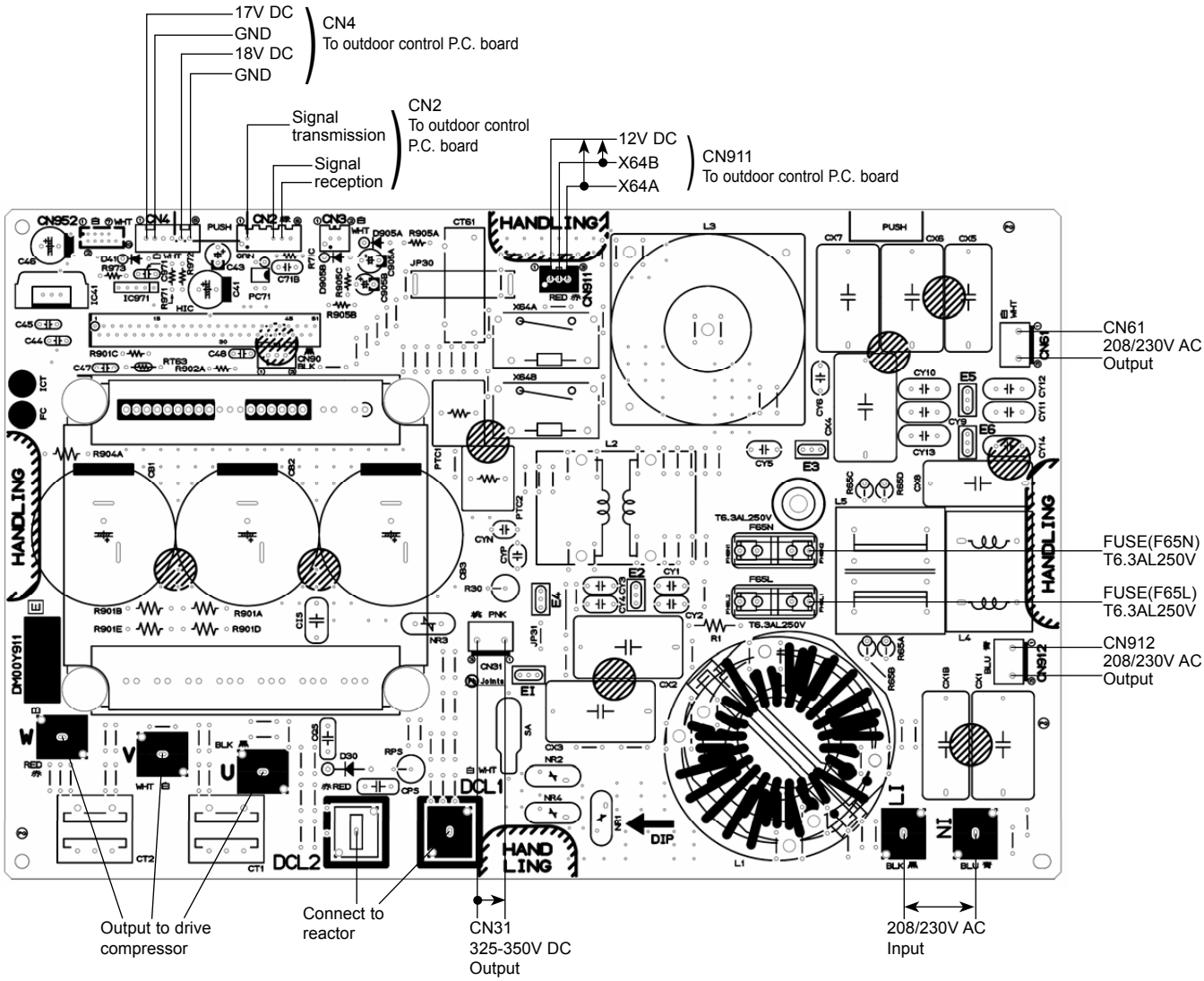

12 DISASSEMBLY INSTRUCTIONS

<"Terminal with locking mechanism" Detaching points>

The terminal which has the locking mechanism can be detached as shown below.
There are two types (Refer to (1) and (2)) of the terminal with locking mechanism.
The terminal without locking mechanism can be detached by pulling it out.
Check the shape of the terminal before detaching.

(1) Slide the sleeve and check if there is a locking lever or not.

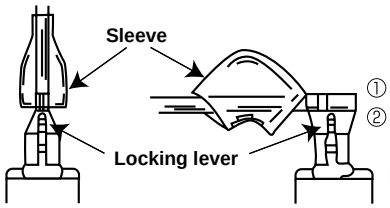

①Slide the sleeve.
②Pull the terminal while pushing the locking lever.

(2) The terminal with this connector has the locking mechanism.

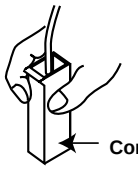

①Hold the sleeve, and pull out the terminal slowly.

12-1. MXZ-2B20NA

NOTE: Turn OFF the power supply before disassembly.

OPERATING PROCEDURE	PHOTOS
1. Removing the compressor (1) Remove the screws of the top panel, and remove the top panel. (2) Remove the screws of the service panel, and remove the service panel. (3) Recover gas from the refrigerant circuit. **NOTE:** Recover gas from the pipes until the pressure gauge shows 0 PSIG. (4) Remove the screws of the cabinet, and remove the cabinet. (5) Remove the screws of the back panel, and remove the back panel (Photo 3). (6) Disconnect the compressor lead wire from terminal of the compressor (U, V, W). (7) Disconnect the outdoor electronic control P.C. board connectors: CN661, CN663, CN791, CN792, CN795, CN931, CN932 Disconnect the noise filter P.C. board connector: CN912 (8) Remove the screws of the electrical parts, and remove the electrical parts (Photo 4). (9) Remove the propeller. (10) Remove the screws of the separator, and remove the separator (Photo 6). (11) Remove the sound proof felt (Photo 6). (12) Detach the brazed parts of the compressor suction and discharge pipes (Photo 5). (13) Remove the compressor nuts and remove the compressor.	**Photo 1** 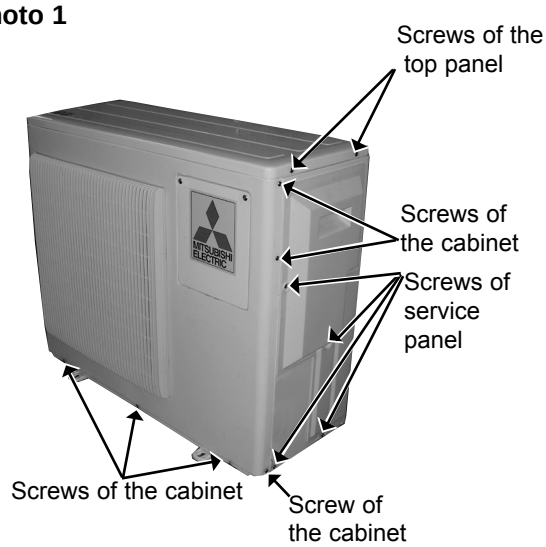 **Photo 2** 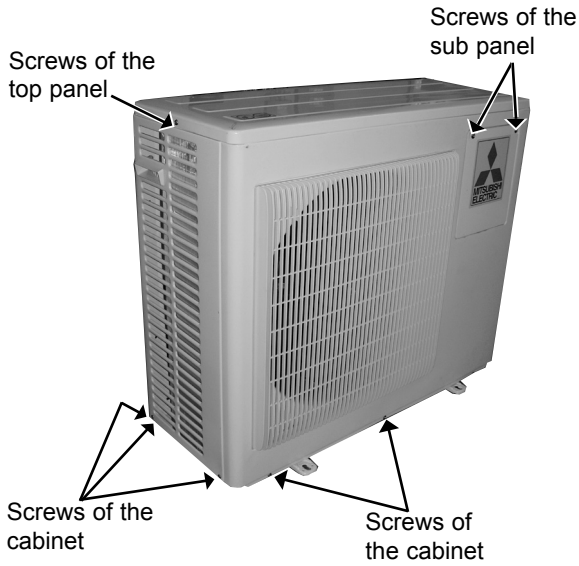

OPERATING PROCEDURE	PHOTOS
2. Removing the electronic control P.C. board (1) Remove the screws of the sub panel. (2) Remove the sub panel. (3) Disconnect all connectors and lead wires on the electronic control P.C. board. (4) Remove the electronic control P.C. board. **Photo 3** 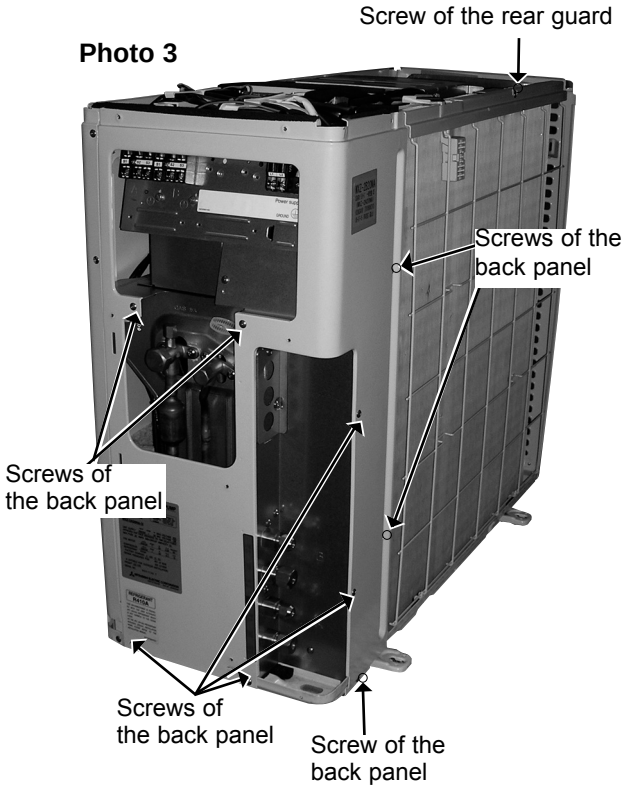 	**Photo 4** 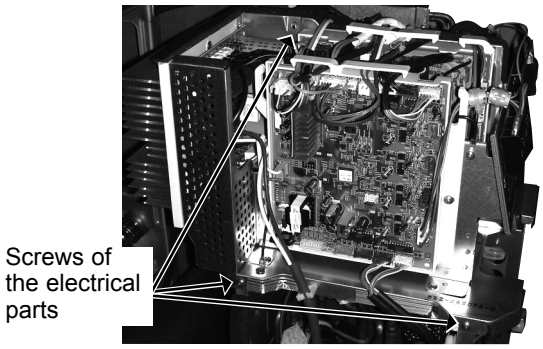 **Photo 5** 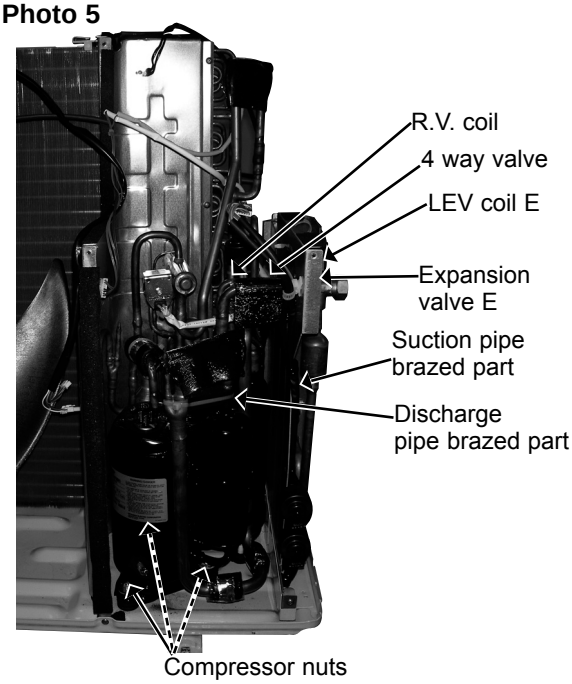
3. Removing the fan motor (1) Remove the top panel, the service panel, and the cabinet (Photo 1, 2). (2) Disconnect the connector CN931 and CN932 on the outdoor electronic control P.C. board. (3) Remove the propeller. (4) Remove the fan motor.	**Photo 6** 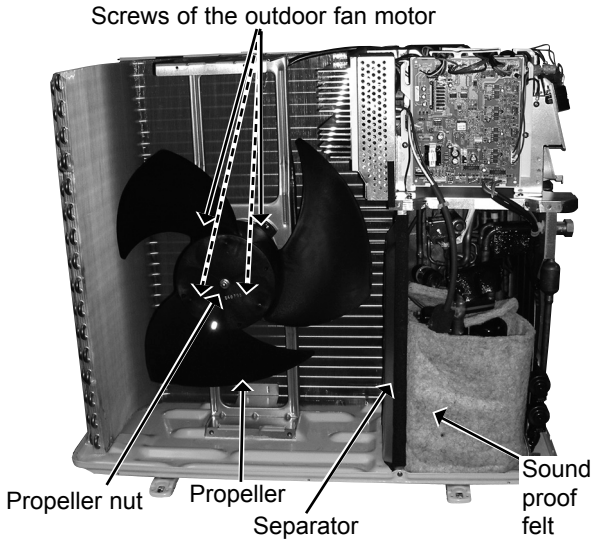

OPERATING PROCEDURE	PHOTOS
4. Removing the 4-way valve (1) Remove the top panel (Photo 1). (2) Remove the service panel, the cabinet, and the back panel (Photo 1, 2, 3). (3) Recover gas from the refrigerant circuit. **NOTE:** Recover gas from the pipes until the pressure gauge shows 0 PSIG. (4) Remove the electrical parts (Photo 4). (5) Detach the brazed parts of 4-way valve and pipe (Photo 7).	**Photo 7** 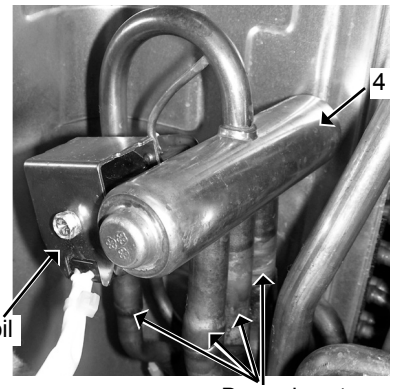
5. Removing the expansion valve (1) Remove the top panel (Photo 1). (2) Remove the service panel, the cabinet, and the back panel (Photo 1, 2, 3). (Gas recovery is not required if the unit is pumped down.) (3) Remove the electrical parts for removing LEV E (Photo 4, 5). (4) Remove the LEV coils. (5) Detach the brazed parts of expansion valves and pipes.	**Photo 8** 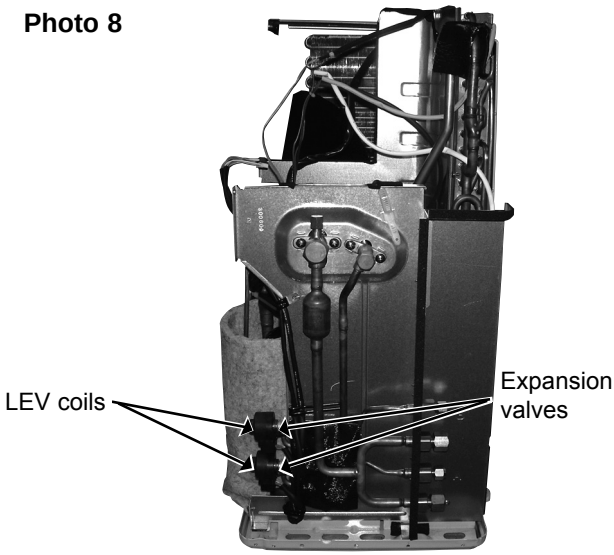
6. Removing the reactor (1) Remove the top panel (Photo 1). (2) Remove the service panel, cabinet, back panel, and the electrical parts (Photo 1, 2, 3, 4). (3) Disconnect the reactor lead wire from the terminal of the reactor. (4) Remove the screws of the reactor, and remove the reactor (Photo 9).	**Photo 9** 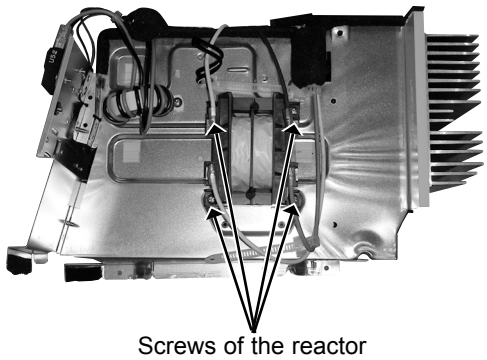

12-2. MXZ-3B24NA MXZ-3B30NA MXZ-4B36NA

NOTE: Turn OFF the power supply before disassembly.

Photo : MXZ-3B24NA

OPERATING PROCEDURE

1. Removing the compressor

(1) Remove the screws of the top panel, and remove the top panel.
(2) Remove the screws of the service panel, and remove the service panel.
(3) Recover gas from the refrigerant circuit.
NOTE : Recover gas from the pipes until the pressure gauge shows 0 PSIG.
(4) Remove the screws of the front panel, and remove the front panel.
(5) Remove the screws of the rear panel, and remove the rear panel.
(6) Disconnect the compressor lead wire from terminal of compressor (U, V, W).
(7) Disconnect the outdoor electronic control P.C. board connectors:
CN661, CN663, CN681, CN791, CN792, CN793, CN794 **(MXZ-4B36NA)**, CN796, CN931, CN932
Disconnect the noise filter P.C. board connector:
CN912
(8) Remove the screws of the electrical parts, and remove the electrical parts.
(9) Remove the propeller.
(10) Remove the screws of the separator, and remove the separator.
(11) Remove the sound proof felt (Photo 5).
(12) Detach the brazed parts of the compressor suction and discharge pipes (Photo 4).
(13) Remove the compressor nuts and remove the compressor.

Photo 4

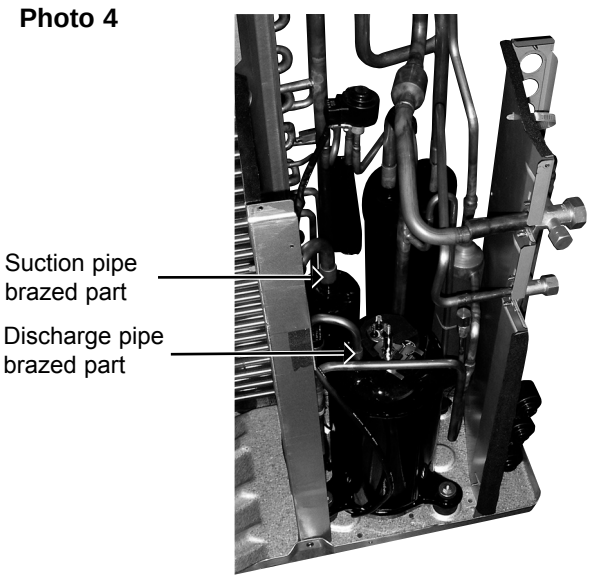

PHOTOS

Photo 1

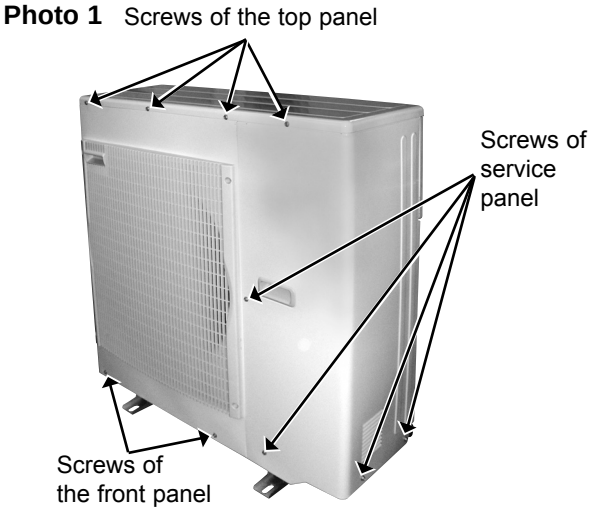

Photo 2

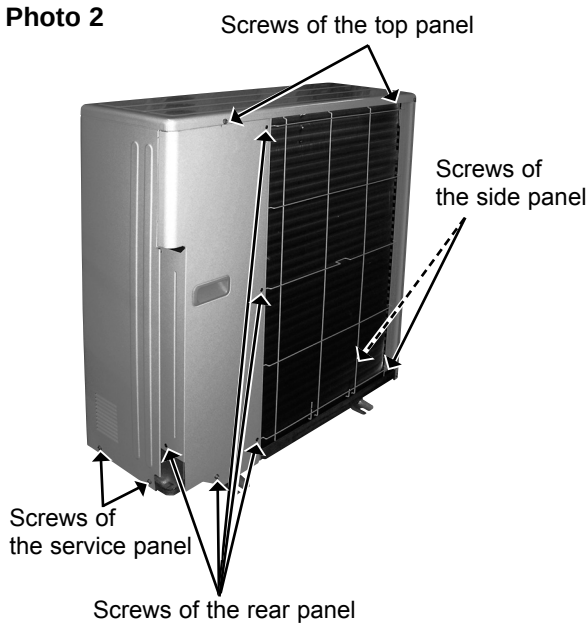

Photo 3

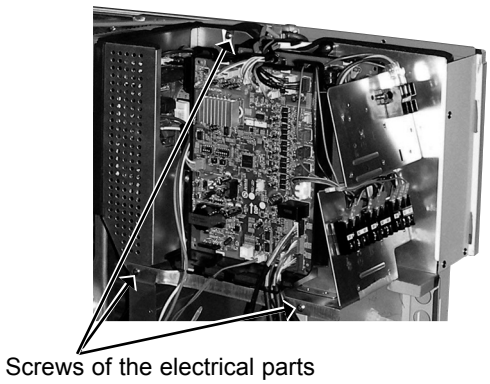

Photo : MXZ-3B24NA

OPERATING PROCEDURE	PHOTOS
2. Removing the fan motor (1) Remove the top panel, the service panel, and the front panel (Photo 1, 2). (2) Disconnect the connectors CN931 and CN932 on the outdoor electronic control P.C. board. (3) Remove the propeller. (4) Remove the fan motor.	**Photo 5** 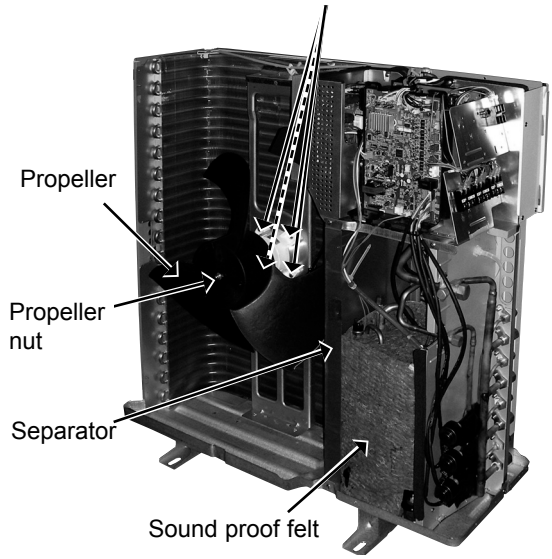
3. Removing the 4-way valve (1) Remove the top panel (Photo 1, 2). (2) Remove the service panel, rear panel, and pipe cover (Photo 1,2). (3) Recover gas from the refrigerant circuit. **NOTE :** Recover gas from the pipes until the pressure gauge shows 0 PSIG. (4) Remove the electrical parts (Photo 3). (5) Detach the brazed parts of 4-way valve and pipe.	**Photo 6** 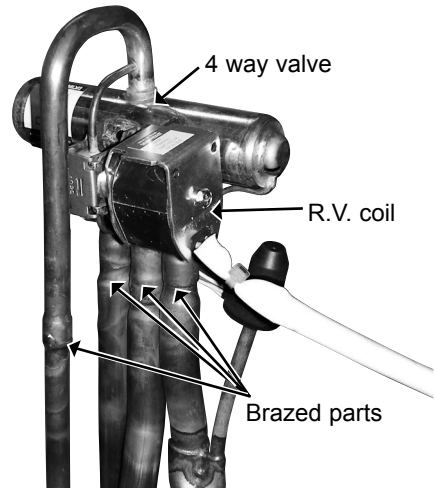
4. Removing the expansion valve (1) Remove the top panel (Photo 1, 2). (2) Remove the service panel (Photo 1, 2). (Gas recovery is not required if the unit is pumped down.) (3) Remove the front panel for removing LEV F (Photo 1). (4) Remove the electrical parts for removing LEV F (Photo 3). (5) Remove the LEV coils. (6) Detach the brazed parts of expansion valves and pipes.	**Photo 7** 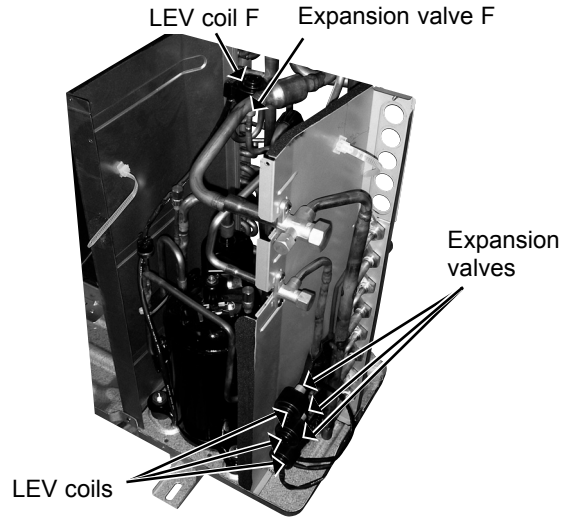

Photo : MXZ-3B24NA

OPERATING PROCEDURE	PHOTOS
5. Removing the reactor (1) Remove the top panel (Photo 1, 2). (2) Disconnect the reactor lead wire. (3) Remove the screws of the reactor, and remove the reactor.	**Photo 8** 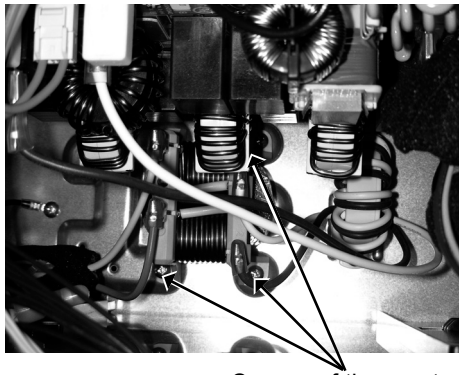 Screws of the reactor

12-3. MXZ-5B42NA

NOTE: Turn OFF power supply before disassembly.

OPERATING PROCEDURE	PHOTOS
1. Removing the panels (1) Remove the screws of the service panel, and remove the service panel. (2) Remove the screws of the top panel, and remove the top panel. (3) Remove the screws of the front panel, and remove the front panel. (4) Remove the screws of the back panel, and remove the back panel.	**Photo 1** 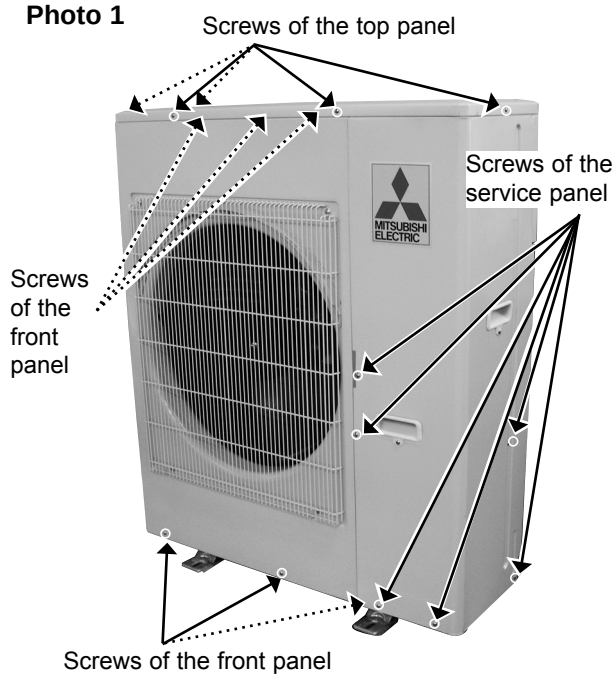 **Photo 2**

OPERATING PROCEDURE	PHOTOS

2. Removing the outdoor control P.C. board, the reactor and the outdoor power P.C. board

(1) Remove the service panel and the top panel (Photo 1).
(2) Disconnect the connectors on the outdoor control P.C. board.
Remove the screws of the the outdoor control P.C. board, and remove the outdoor control P.C. board.
(3) Remove the screws of the reactor cover, and remove the reactor cover.
(4) Remove the screws of the reactor, and remove the reactor.
(5) Remove the screws of the outdoor power P.C. board, and remove the outdoor power P.C. board.

Photo 3

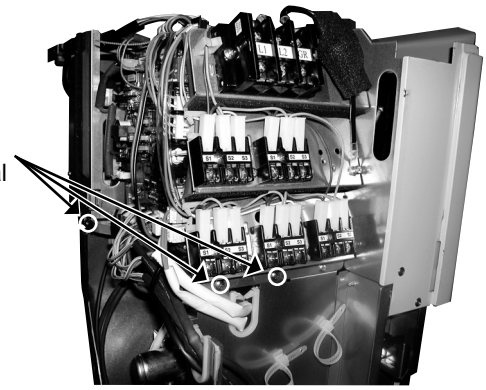

Photo 4

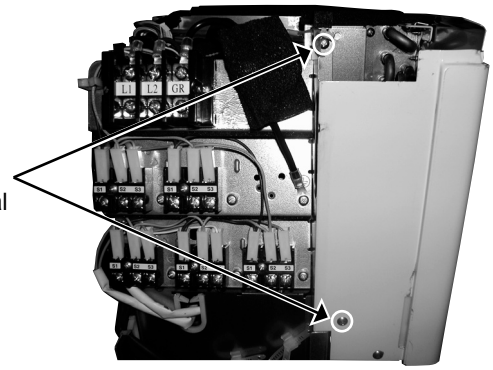

Photo 6

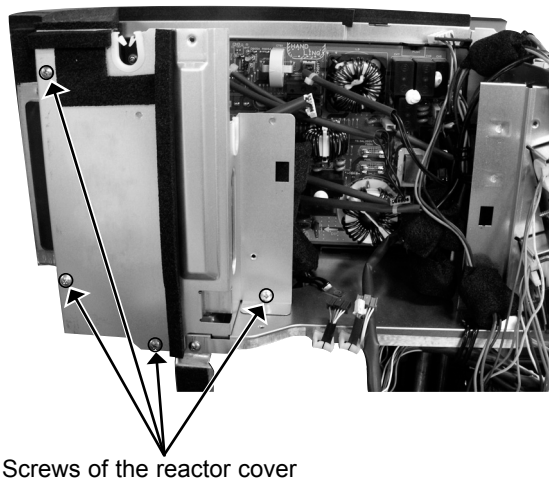

Photo 5

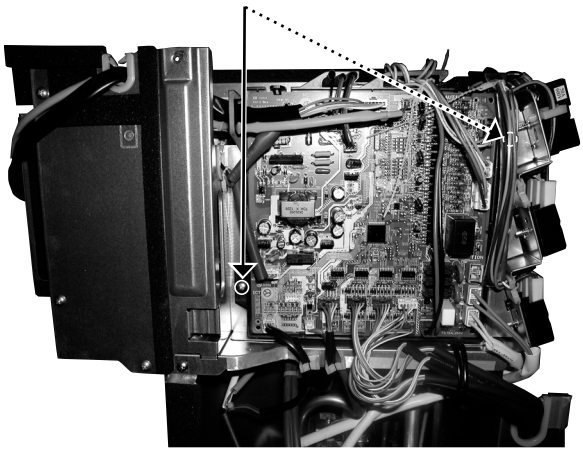

Photo 7

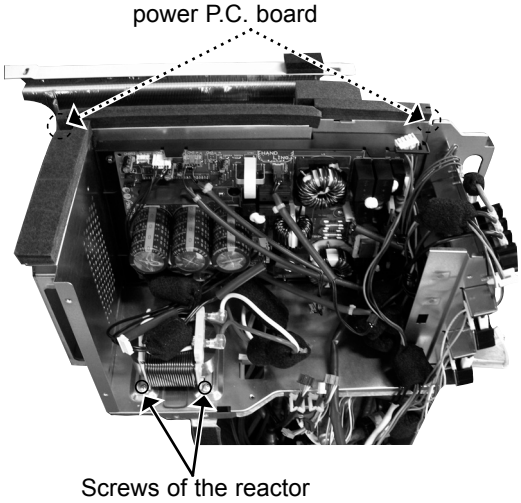

OPERATING PROCEDURE	PHOTOS
3. Removing the fan motor (1) Remove the top panel, the service panel, and the front panel (Photo 1). (2) Disconnect the connector CN931 on the outdoor control P.C. board. (3) Remove the propeller. (4) Remove the fan motor.	**Photo 8** 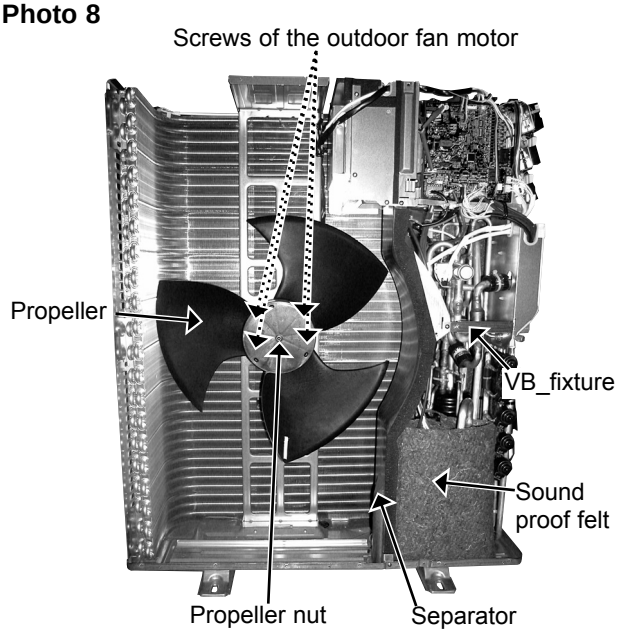
4. Removing the compressor and 4-way valve (1) Remove the top panel (Photo 1). (2) Remove the service panel, front panel, and back panel. (Photo 1, 2). (3) Recover gas from the refrigerant circuit. **NOTE:** Recover gas from the pipes until the pressure gauge shows 0 kg/cm^2 (0 MPa). (4) Disconnect the compressor lead wire from terminal of compressor (U, V, W). (5) Disconnect the outdoor control P.C. board connectors: CN661, CN663, CN681, CN712, CN713, CN791, CN792, CN793, CN794, CN795, CN797, CN931 (6) Remove the screws of the electrical parts, and remove the electrical parts (Photo 3, 4). (7) Remove the propeller (Photo 8). (8) Remove the VB_fixture (Photo 8). (9) Remove the screws of the separator, and remove the separator (Photo 8). (10) Remove the sound proof felt (Photo 8). (11) Detach the brazed parts of the compressor suction and discharge pipes (Photo 10). (12) Remove the compressor nuts and remove the compressor (Photo 10). (13) Detach the brazed parts of 4-way valve and pipe.	**Photo 9** 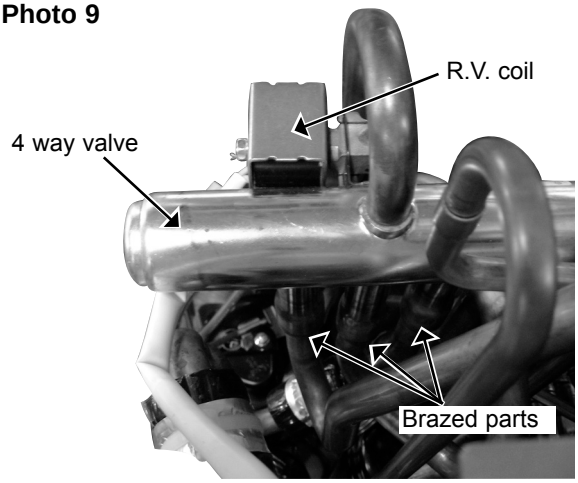

OPERATING PROCEDURE	PHOTOS
5. Removing the expansion valve (1) Remove the top panel (Photo 1). (2) Remove the service panel (Photo 1). (Gas recovery is not required if the unit is pumped down.) (3) Remove the front panel for removing LEV M (Photo 1). (4) Remove the electrical parts for removing LEV M (Photo 3, 4). (5) Remove the LEV coils. (6) Detach the brazed parts of expansion valves and pipes.	**Photo 10** 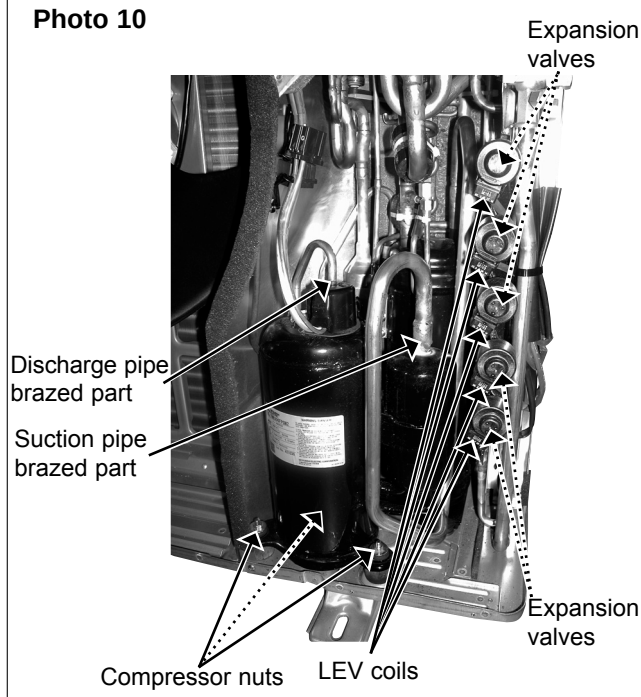 **Photo 11** 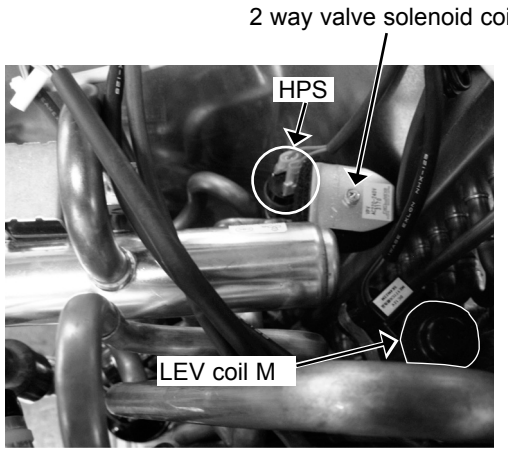

MITSUBISHI ELECTRIC CORPORATION

HEAD OFFICE: TOKYO BLDG., 2-7-3, MARUNOUCHI, CHIYODA-KU, TOKYO 100-8310, JAPAN

© Copyright 2009 MITSUBISHI ELECTRIC CORPORATION
Distributed in Jun. 2013. No. OBH560 REVISED EDITION-G
Distributed in Dec. 2011. No. OBH560 REVISED EDITION-F
Distributed in Jun. 2011. No. OBH560 REVISED EDITION-E
Distributed in Jan. 2011. No. OBH560 REVISED EDITION-D
Distributed in Mar. 2010. No. OBH560 REVISED EDITION-C 6
Distributed in Feb. 2010. No. OBH560 REVISED EDITION-B 6
Distributed in Dec. 2009. No. OBH560 REVISED EDITION-A 5
Distributed in Sep. 2009. No. OBH560 5
Made in Japan

New publication, effective Jun. 2013
Specifications are subject to change without notice.

MXZ-2B20NA MXZ-2B20NA-1 COOLING

Indoor units combination	Indoor type		Cooling capacity(BTU/h)			Power consumption (W)	Current(A)		P/F(%)
	A	B	Unit A	Unit B	Total		208V	230V	
06	Wall		6000		6000 (5400 - 9000)	530 (490 - 680)	2.68	2.43	95
09	Wall		9000		9000 (5400 - 9000)	680 (490 - 680)	3.44	3.11	95
	Duct		9000		9000 (5400 - 9000)	750 (510 - 750)	3.80	3.43	95
12	Wall		12000		12000 (5400 - 12000)	930 (490 - 930)	4.71	4.26	95
	Duct		12000		12000 (5400 - 12000)	1010 (510 - 1010)	5.11	4.62	95
15	Wall		15000		15000 (5400 - 15000)	1330 (490 - 1330)	6.73	6.09	95
	Duct		15000		15000 (5400 - 15000)	1560 (510 - 1560)	7.89	7.14	95
06+06	Wall	Wall	6000	6000	12000 (7800 - 15000)	800 (630 - 1820)	3.97	3.59	97
06+09	Wall	Wall	6000	9000	15000 (7800 - 18000)	1050 (630 - 1820)	5.20	4.71	97
	Wall	Duct	6000	9000	15000 (7800 - 16500)	1150 (650 - 1800)	5.70	5.15	97
06+12	Wall	Wall	6000	12000	18000 (7800 - 20000)	1440 (630 - 1820)	7.14	6.45	97
	Wall	Duct	6000	12000	18000 (7800 - 19000)	1610 (650 - 1800)	7.98	7.22	97
06+15	Wall	Wall	5800	14200	20000 (7800 - 23000)	1660 (630 - 2230)	8.23	7.44	97
	Wall	Duct	5800	14200	20000 (7800 - 21500)	1930 (650 - 2210)	9.57	8.65	97
09+09	Wall	Wall	9000	9000	18000 (7800 - 20000)	1440 (630 - 1820)	7.14	6.45	97
	Wall	Duct	9000	9000	18000 (7800 - 19000)	1610 (650 - 1800)	7.98	7.22	97
	Duct	Duct	9000	9000	18000 (7800 - 18000)	1780 (670 - 1780)	8.82	7.98	97
09+12	Wall	Wall	8500	11500	20000 (7800 - 23000)	1660 (630 - 2230)	8.23	7.44	97
	Wall	Duct	8500	11500	20000 (7800 - 21500)	1930 (650 - 2210)	9.57	8.65	97
	Duct	Wall	8500	11500	20000 (7800 - 21500)	1930 (650 - 2210)	9.57	8.65	97
	Duct	Duct	8500	11500	20000 (7800 - 20000)	2190 (670 - 2190)	10.85	9.82	97
09+15	Wall	Wall	7500	12500	20000 (7800 - 23000)	1660 (630 - 2230)	8.23	7.44	97
	Wall	Duct	7500	12500	20000 (7800 - 21500)	1930 (650 - 2210)	9.57	8.65	97
	Duct	Wall	7500	12500	20000 (7800 - 21500)	1930 (650 - 2210)	9.57	8.65	97
	Duct	Duct	7500	12500	20000 (7800 - 20000)	2190 (670 - 2190)	10.85	9.82	97
12+12	Wall	Wall	10000	10000	20000 (7800 - 23000)	1630 (630 - 2230)	8.08	7.31	97
	Wall	Duct	10000	10000	20000 (7800 - 21500)	1910 (650 - 2210)	9.47	8.56	97
	Duct	Duct	10000	10000	20000 (7800 - 20000)	2190 (670 - 2190)	10.85	9.82	97

MXZ-2B20NA MXZ-2B20NA-1 HEATING

Indoor units combination	Indoor type		Heating capacity(BTU/h)			Power consumption (W)	Current(A)		P/F(%)
	A	B	Unit A	Unit B	Total		208V	230V	
06	Wall		7400		7400 (5200 - 14400)	610 (480 - 1400)	3.09	2.79	95
09	Wall		11000		11000 (5200 - 15400)	880 (480 - 1430)	4.45	4.03	95
	Duct		10900		10900 (5200 - 15400)	940 (480 - 1430)	4.76	4.30	95
12	Wall		13600		13600 (5200 - 16400)	1150 (480 - 1460)	5.82	5.26	95
	Duct		13600		13600 (5200 - 16400)	1180 (480 - 1460)	5.97	5.40	95
15	Wall		18000		18000 (5200 - 21100)	1650 (480 - 2100)	8.35	7.55	95
	Duct		18000		18000 (5200 - 21100)	1720 (480 - 2100)	8.70	7.87	95
06+06	Wall	Wall	7400	7400	14800 (8500 - 25500)	960 (520 - 2410)	4.76	4.30	97
06+09	Wall	Wall	7400	11000	18400 (8500 - 25500)	1270 (520 - 2410)	6.29	5.69	97
	Wall	Duct	7400	10900	18300 (8500 - 25500)	1400 (520 - 2520)	6.94	6.28	97
06+12	Wall	Wall	7400	13600	21000 (8500 - 25500)	1520 (520 - 2410)	7.53	6.81	97
	Wall	Duct	7400	13600	21000 (8500 - 25500)	1590 (520 - 2520)	7.88	7.13	97
06+15	Wall	Wall	6400	15600	22000 (8500 - 25500)	1650 (520 - 2410)	8.18	7.40	97
	Wall	Duct	6400	15600	22000 (8500 - 25500)	1720 (520 - 2520)	8.52	7.71	97
09+09	Wall	Wall	11000	11000	22000 (8500 - 25500)	1650 (520 - 2410)	8.18	7.40	97
	Wall	Duct	11000	10900	21900 (8500 - 25500)	1740 (520 - 2520)	8.62	7.80	97
	Duct	Duct	10900	10900	21800 (8500 - 25500)	1820 (520 - 2620)	9.02	8.16	97
09+12	Wall	Wall	9500	12500	22000 (8500 - 25500)	1650 (520 - 2410)	8.18	7.40	97
	Wall	Duct	9500	12500	22000 (8500 - 25500)	1720 (520 - 2520)	8.52	7.71	97
	Duct	Wall	9500	12500	22000 (8500 - 25500)	1720 (520 - 2520)	8.52	7.71	97
	Duct	Duct	9500	12500	22000 (8500 - 25500)	1780 (520 - 2620)	8.82	7.98	97
09+15	Wall	Wall	8250	13750	22000 (8500 - 25500)	1650 (520 - 2410)	8.18	7.40	97
	Wall	Duct	8250	13750	22000 (8500 - 25500)	1720 (520 - 2520)	8.52	7.71	97
	Duct	Wall	8250	13750	22000 (8500 - 25500)	1720 (520 - 2520)	8.52	7.71	97
	Duct	Duct	8250	13750	22000 (8500 - 25500)	1780 (520 - 2620)	8.82	7.98	97
12+12	Wall	Wall	11000	11000	22000 (8500 - 25500)	1650 (520 - 2410)	8.18	7.40	97
	Wall	Duct	11000	11000	22000 (8500 - 25500)	1720 (520 - 2520)	8.52	7.71	97
	Duct	Duct	11000	11000	22000 (8500 - 25500)	1780 (520 - 2620)	8.82	7.98	97

MXZ-3B24NA MXZ-3B24NA-1 COOLING

Indoor units combination	Indoor type			Cooling capacity(BTU/h)				Power consumption (W)	Current(A)		P/F(%)
	A	B	C	Unit A	Unit B	Unit C	Total		208V	230V	
06	Non Duct			6500			6500 (5200 - 6500)	580 (460 - 580)	2.94	2.65	95
09	Non Duct			9000			9000 (7200 - 9000)	800 (580 - 800)	4.05	3.66	95
	Duct			9000			9000 (7200 - 9000)	820 (600 - 820)	4.15	3.75	95
12	Non Duct			12000			12000 (7200 - 12000)	1000 (580 - 1000)	5.06	4.58	95
	Duct			12000			12000 (7200 - 12000)	1020 (600 - 1020)	5.16	4.67	95
15	Non Duct			14000			14000 (7200 - 15000)	1320 (580 - 1320)	6.68	6.04	95
	Duct			15000			15000 (7200 - 15000)	1340 (600 - 1340)	6.78	6.13	95
18	Non Duct			17200			17200 (7200 - 17200)	1570 (580 - 1570)	7.95	7.19	95
	Duct			17200			17200 (7200 - 17200)	1590 (600 - 1590)	8.05	7.28	95
06+06	Non Duct	Non Duct		6500	6500		13000 (12000 - 13000)	960 (920 - 960)	4.76	4.30	97
06+09	Non Duct	Non Duct		6500	9000		15500 (12000 - 15500)	1200 (920 - 1200)	5.95	5.38	97
	Non Duct	Duct		6500	9000		15500 (12000 - 15500)	1260 (940 - 1260)	6.25	5.65	97
06+12	Non Duct	Non Duct		6500	12000		18500 (12000 - 18500)	1540 (920 - 1540)	7.63	6.90	97
	Non Duct	Duct		6500	12000		18500 (12000 - 18500)	1600 (940 - 1600)	7.93	7.17	97
06+15	Non Duct	Non Duct		6400	13600		20000 (12000 - 20500)	1740 (920 - 1820)	8.62	7.80	97
	Non Duct	Duct		6100	13900		20000 (12000 - 20500)	1800 (940 - 1840)	8.92	8.07	97
06+18	Non Duct	Non Duct		5500	14500		20000 (12000 - 23700)	1700 (920 - 2440)	8.43	7.62	97
	Non Duct	Duct		5500	14500		20000 (12000 - 23700)	1760 (940 - 2460)	8.72	7.89	97
09+09	Non Duct	Non Duct		9000	9000		18000 (12000 - 18000)	1480 (920 - 1480)	7.34	6.63	97
	Non Duct	Duct		9000	9000		18000 (12000 - 18000)	1660 (940 - 1660)	8.23	7.44	97
	Duct	Duct		9000	9000		18000 (12000 - 18000)	1840 (960 - 1840)	9.12	8.25	97
09+12	Non Duct	Non Duct		8600	11400		20000 (12000 - 21000)	1780 (920 - 1940)	8.82	7.98	97
	Non Duct	Duct		8600	11400		20000 (12000 - 21000)	1840 (940 - 1990)	9.12	8.25	97
	Duct	Non Duct		8600	11400		20000 (12000 - 21000)	1840 (940 - 1990)	9.12	8.25	97
	Duct	Duct		8600	11400		20000 (12000 - 21000)	1900 (960 - 2040)	9.42	8.52	97
09+15	Non Duct	Non Duct		7900	12100		20000 (12000 - 24000)	1760 (920 - 2500)	8.72	7.89	97
	Non Duct	Duct		7500	12500		20000 (12000 - 24000)	1820 (940 - 2520)	9.02	8.16	97
	Duct	Non Duct		7900	12100		20000 (12000 - 24000)	1820 (940 - 2520)	9.02	8.16	97
	Duct	Duct		7500	12500		20000 (12000 - 24000)	1880 (960 - 2540)	9.32	8.43	97
09+18	Non Duct	Non Duct		6800	13200		20000 (12000 - 26000)	1720 (920 - 2800)	8.52	7.71	97
	Non Duct	Duct		6800	13200		20000 (12000 - 26000)	1780 (940 - 2820)	8.82	7.98	97
	Duct	Non Duct		6800	13200		20000 (12000 - 26000)	1780 (940 - 2820)	8.82	7.98	97
	Duct	Duct		6800	13200		20000 (12000 - 26000)	1840 (960 - 2840)	9.12	8.25	97
12+12	Non Duct	Non Duct		10000	10000		20000 (12000 - 24000)	1740 (920 - 2500)	8.62	7.80	97
	Non Duct	Duct		10000	10000		20000 (12000 - 24000)	1800 (940 - 2520)	8.92	8.07	97
	Duct	Duct		10000	10000		20000 (12000 - 24000)	1860 (960 - 2540)	9.22	8.34	97
12+15	Non Duct	Non Duct		9300	10700		20000 (12000 - 26000)	1720 (920 - 2800)	8.52	7.71	97
	Non Duct	Duct		8900	11100		20000 (12000 - 26000)	1780 (940 - 2820)	8.82	7.98	97
	Duct	Non Duct		9300	10700		20000 (12000 - 26000)	1780 (940 - 2820)	8.82	7.98	97
	Duct	Duct		8900	11100		20000 (12000 - 26000)	1840 (960 - 2840)	9.12	8.25	97
06+06+06	Non Duct	Non Duct	Non Duct	6500	6500	6500	19500 (12600 - 19500)	1600 (1000 - 1600)	7.93	7.17	97
06+06+09	Non Duct	Non Duct	Non Duct	6500	6500	9000	22000 (12600 - 22000)	1760 (1000 - 1760)	8.72	7.89	97
	Non Duct	Non Duct	Duct	6500	6500	9000	22000 (12600 - 22000)	1940 (1020 - 1940)	9.62	8.70	97
06+06+12	Non Duct	Non Duct	Non Duct	5800	5800	10400	22000 (12600 - 25000)	1720 (1000 - 2230)	8.52	7.71	97
	Non Duct	Non Duct	Duct	5800	5800	10600	22200 (12600 - 25000)	1980 (1020 - 2330)	9.81	8.87	97
06+06+15	Non Duct	Non Duct	Non Duct	5300	5300	11400	22000 (12600 - 27000)	1680 (1000 - 2530)	8.33	7.53	97
	Non Duct	Non Duct	Duct	5300	5300	11900	22500 (12600 - 27000)	1940 (1020 - 2580)	9.62	8.70	97
06+09+09	Non Duct	Non Duct	Non Duct	6000	8000	8000	22000 (12600 - 24500)	1720 (1000 - 2230)	8.52	7.71	97
	Non Duct	Non Duct	Duct	6000	8000	8200	22200 (12600 - 24500)	1980 (1020 - 2260)	9.81	8.87	97
	Non Duct	Duct	Duct	6000	8200	8200	22400 (12600 - 24500)	2240 (1040 - 2290)	11.10	10.04	97

MXZ-3B24NA MXZ-3B24NA-1 COOLING

Indoor units combination	Indoor type			Cooling capacity(BTU/h)				Power consumption (W)	Current(A)		P/F(%)
	A	B	C	Unit A	Unit B	Unit C	Total		208V	230V	
06+09+12	Non Duct	Non Duct	Non Duct	5200	7200	9600	22000 (12600 - 27000)	1680 (1000 - 2640)	8.33	7.53	97
	Non Duct	Non Duct	Duct	5200	7200	10100	22500 (12600 - 26000)	1940 (1020 - 2660)	9.62	8.70	97
	Non Duct	Duct	Non Duct	5200	7700	9600	22500 (12600 - 26000)	1940 (1020 - 2670)	9.62	8.70	97
	Non Duct	Duct	Duct	5200	7700	10100	23000 (12600 - 25000)	2180 (1040 - 2690)	10.80	9.77	97
09+09+09	Non Duct	Non Duct	Non Duct	7333	7333	7333	22000 (12600 - 27000)	1680 (1000 - 2530)	8.33	7.53	97
	Non Duct	Non Duct	Duct	7300	7300	7900	22500 (12600 - 26500)	1940 (1020 - 2670)	9.62	8.70	97
	Non Duct	Duct	Duct	7300	7900	7900	23100 (12600 - 26000)	2200 (1040 - 2810)	10.90	9.86	97
	Duct	Duct	Duct	7866	7866	7866	23600 (12600 - 25500)	2460 (1060 - 2950)	12.19	11.03	97

MXZ-3B24NA MXZ-3B24NA-1 HEATING

Indoor units combination	Indoor type			Heating capacity(BTU/h)				Power consumption (W)	Current(A)		P/F(%)
	A	B	C	Unit A	Unit B	Unit C	Total		208V	230V	
06	Non Duct			7800			7800 (6800 - 14400)	640 (540 - 1460)	3.24	2.93	95
09	Non Duct			10900			10900 (8600 - 15400)	1040 (780 - 1520)	5.26	4.76	95
	Duct			10900			10900 (8600 - 15400)	1100 (780 - 1520)	5.57	5.03	95
12	Non Duct			14400			14400 (8600 - 16400)	1320 (780 - 1600)	6.68	6.04	95
	Duct			13600			13600 (8600 - 16400)	1380 (780 - 1600)	6.98	6.32	95
15	Non Duct			18000			18000 (8600 - 21100)	1880 (780 - 2280)	9.51	8.60	95
	Duct			18000			18000 (8600 - 21100)	1940 (780 - 2280)	9.82	8.88	95
18	Non Duct			21600			21600 (8600 - 24900)	2360 (780 - 2770)	11.94	10.80	95
	Duct			21600			21600 (8600 - 24900)	2410 (780 - 2770)	12.20	11.03	95
06+06	Non Duct	Non Duct		7800	7800		15600 (11000 - 25800)	1020 (740 - 2240)	5.06	4.57	97
06+09	Non Duct	Non Duct		7800	10900		18700 (11000 - 25800)	1300 (740 - 2200)	6.44	5.83	97
	Non Duct	Duct		7800	10900		18700 (11000 - 25800)	1360 (740 - 2240)	6.74	6.10	97
06+12	Non Duct	Non Duct		7800	14400		22200 (11000 - 27400)	1680 (740 - 2480)	8.33	7.53	97
	Non Duct	Duct		7800	13600		21400 (11000 - 27400)	1740 (740 - 2520)	8.62	7.80	97
06+15	Non Duct	Non Duct		7200	16400		23600 (11000 - 27400)	1820 (740 - 2440)	9.02	8.16	97
	Non Duct	Duct		7200	16400		23600 (11000 - 27400)	1880 (740 - 2620)	9.32	8.43	97
06+18	Non Duct	Non Duct		6300	17300		23600 (11000 - 29000)	1760 (740 - 2760)	8.72	7.89	97
	Non Duct	Duct		6300	17300		23600 (11000 - 29000)	1820 (740 - 2840)	9.02	8.16	97
09+09	Non Duct	Non Duct		10900	10900		21800 (11000 - 27400)	1580 (740 - 2480)	7.83	7.08	97
	Non Duct	Duct		10900	10900		21800 (11000 - 27400)	1640 (740 - 2520)	8.13	7.35	97
	Duct	Duct		10900	10900		21800 (11000 - 27400)	1700 (740 - 2560)	8.43	7.62	97
09+12	Non Duct	Non Duct		10200	13400		23600 (11000 - 27400)	1820 (740 - 2440)	9.02	8.16	97
	Non Duct	Duct		10200	13200		23400 (11000 - 27400)	1880 (740 - 2600)	9.32	8.43	97
	Duct	Non Duct		10000	13400		23400 (11000 - 27400)	1880 (740 - 2640)	9.32	8.43	97
	Duct	Duct		10000	13200		23200 (11000 - 27400)	1940 (740 - 2800)	9.62	8.70	97
09+15	Non Duct	Non Duct		9000	14600		23600 (11000 - 29000)	1760 (740 - 2760)	8.72	7.89	97
	Non Duct	Duct		9000	14600		23600 (11000 - 29000)	1820 (740 - 2820)	9.02	8.16	97
	Duct	Non Duct		9000	14600		23600 (11000 - 29000)	1820 (740 - 2860)	9.02	8.16	97
	Duct	Duct		9000	14600		23600 (11000 - 29000)	1880 (740 - 2920)	9.32	8.43	97
09+18	Non Duct	Non Duct		8000	15600		23600 (11000 - 29000)	1700 (740 - 2720)	8.43	7.62	97
	Non Duct	Duct		8000	15600		23600 (11000 - 29000)	1760 (740 - 2800)	8.72	7.89	97
	Duct	Non Duct		8000	15600		23600 (11000 - 29000)	1760 (740 - 2840)	8.72	7.89	97
	Duct	Duct		8000	15600		23600 (11000 - 29000)	1820 (740 - 2920)	9.02	8.16	97
12+12	Non Duct	Non Duct		11800	11800		23600 (11000 - 29000)	1760 (740 - 2760)	8.72	7.89	97
	Non Duct	Duct		12200	11400		23600 (11000 - 29000)	1820 (740 - 2840)	9.02	8.16	97
	Duct	Duct		11800	11800		23600 (11000 - 29000)	1880 (740 - 2920)	9.32	8.43	97
12+15	Non Duct	Non Duct		10500	13100		23600 (11000 - 29000)	1700 (740 - 2720)	8.43	7.62	97
	Non Duct	Duct		10500	13100		23600 (11000 - 29000)	1760 (740 - 2800)	8.72	7.89	97
	Duct	Non Duct		10200	13400		23600 (11000 - 29000)	1760 (740 - 2800)	8.72	7.89	97
	Duct	Duct		10200	13400		23600 (11000 - 29000)	1820 (740 - 2860)	9.02	8.16	97
06+06+06	Non Duct	Non Duct	Non Duct	7800	7800	7800	23400 (11400 - 30600)	1750 (740 - 2420)	8.67	7.84	97
06+06+09	Non Duct	Non Duct	Non Duct	7400	7400	10200	25000 (11400 - 30600)	1750 (740 - 2440)	8.67	7.84	97
	Non Duct	Non Duct	Duct	7400	7400	9600	24400 (11400 - 30200)	1820 (740 - 2480)	9.02	8.16	97
06+06+12	Non Duct	Non Duct	Non Duct	6500	6500	12000	25000 (11400 - 30600)	1720 (740 - 2460)	8.52	7.71	97
	Non Duct	Non Duct	Duct	6500	6500	11600	24600 (11400 - 30200)	1800 (740 - 2500)	8.92	8.07	97
06+06+15	Non Duct	Non Duct	Non Duct	5900	5900	13200	25000 (11400 - 30600)	1660 (740 - 2480)	8.23	7.44	97
	Non Duct	Non Duct	Duct	5900	5900	13000	24800 (11400 - 30200)	1740 (740 - 2520)	8.62	7.80	97
06+09+09	Non Duct	Non Duct	Non Duct	6600	9200	9200	25000 (11400 - 30600)	1720 (740 - 2460)	8.52	7.71	97
	Non Duct	Non Duct	Duct	6600	9200	8900	24700 (11400 - 30200)	1800 (740 - 2500)	8.92	8.07	97
	Non Duct	Duct	Duct	6600	8900	8900	24400 (11400 - 29800)	1880 (740 - 2540)	9.32	8.43	97

MXZ-3B24NA MXZ-3B24NA-1 HEATING

Indoor units combination	Indoor type			Heating capacity(BTU/h)				Power consumption (W)	Current(A)		P/F(%)
	A	B	C	Unit A	Unit B	Unit C	Total		208V	230V	
06+09+12	Non Duct	Non Duct	Non Duct	5900	8300	10800	25000 (11400 - 30600)	1660 (740 - 2480)	8.23	7.44	97
	Non Duct	Non Duct	Duct	5900	8300	10600	24800 (11400 - 30200)	1740 (740 - 2520)	8.62	7.80	97
	Non Duct	Duct	Non Duct	5900	8200	10800	24900 (11400 - 30200)	1740 (740 - 2520)	8.62	7.80	97
	Non Duct	Duct	Duct	5900	8200	10600	24700 (11400 - 29800)	1820 (740 - 2560)	9.02	8.16	97
09+09+09	Non Duct	Non Duct	Non Duct	8333	8333	8333	25000 (11400 - 30600)	1660 (740 - 2480)	8.23	7.44	97
	Non Duct	Non Duct	Duct	8300	8300	8200	24800 (11400 - 30200)	1740 (740 - 2520)	8.62	7.80	97
	Non Duct	Duct	Duct	8300	8200	8200	24700 (11400 - 29800)	1820 (740 - 2560)	9.02	8.16	97
	Duct	Duct	Duct	8200	8200	8200	24600 (11400 - 29400)	1900 (740 - 2600)	9.42	8.52	97

MXZ-3B30NA MXZ-3B30NA-1 COOLING

Indoor units combination	Indoor type			Cooling capacity(BTU/h)				Power consumption (W)	Current(A)		P/F(%)
	A	B	C	Unit A	Unit B	Unit C	Total		208V	230V	
06	Non Duct			6500			6500 (5200 - 6500)	580 (460 - 580)	2.94	2.65	95
09	Non Duct			9000			9000 (7200 - 9000)	800 (580 - 800)	4.05	3.66	95
	Duct			9000			9000 (7200 - 9000)	820 (600 - 820)	4.15	3.75	95
12	Non Duct			12000			12000 (7200 - 12000)	1000 (580 - 1000)	5.06	4.58	95
	Duct			12000			12000 (7200 - 12000)	1020 (600 - 1020)	5.16	4.67	95
15	Non Duct			14000			14000 (7200 - 15000)	1320 (580 - 1320)	6.68	6.04	95
	Duct			15000			15000 (7200 - 15000)	1340 (600 - 1340)	6.78	6.13	95
18	Non Duct			17200			17200 (7200 - 17200)	1570 (580 - 1570)	7.95	7.19	95
	Duct			17200			17200 (7200 - 17200)	1590 (600 - 1590)	8.05	7.28	95
24	Non Duct			22000			22000 (7200 - 22000)	2200 (580 - 2200)	11.13	10.07	95
06+06	Non Duct	Non Duct		6500	6500		13000 (12000 - 13000)	960 (920 - 960)	4.76	4.30	97
06+09	Non Duct	Non Duct		6500	9000		15500 (12000 - 15500)	1200 (920 - 1200)	5.95	5.38	97
	Non Duct	Duct		6500	9000		15500 (12000 - 15500)	1260 (940 - 1260)	6.25	5.65	97
06+12	Non Duct	Non Duct		6500	12000		18500 (12000 - 18500)	1540 (920 - 1540)	7.63	6.90	97
	Non Duct	Duct		6500	12000		18500 (12000 - 18500)	1600 (940 - 1600)	7.93	7.17	97
06+15	Non Duct	Non Duct		6500	14000		20500 (12000 - 20500)	1820 (920 - 1820)	9.02	8.16	97
	Non Duct	Duct		6500	15000		21500 (12000 - 21500)	1940 (940 - 1940)	9.62	8.70	97
06+18	Non Duct	Non Duct		6500	17200		23700 (12000 - 23700)	2440 (920 - 2440)	12.09	10.94	97
	Non Duct	Duct		6500	17200		23700 (12000 - 23700)	2460 (940 - 2460)	12.19	11.03	97
06+24	Non Duct	Non Duct		5900	20100		26000 (12000 - 26000)	2800 (920 - 2800)	13.88	12.55	97
09+09	Non Duct	Non Duct		9000	9000		18000 (12000 - 18000)	1480 (920 - 1480)	7.34	6.63	97
	Non Duct	Duct		9000	9000		18000 (12000 - 18000)	1660 (940 - 1660)	8.23	7.44	97
	Duct	Duct		9000	9000		18000 (12000 - 18000)	1840 (960 - 1840)	9.12	8.25	97
09+12	Non Duct	Non Duct		9000	12000		21000 (12000 - 21000)	1940 (920 - 1940)	9.62	8.70	97
	Non Duct	Duct		9000	12000		21000 (12000 - 21000)	1990 (940 - 1990)	9.86	8.92	97
	Duct	Non Duct		9000	12000		21000 (12000 - 21000)	1990 (940 - 1990)	9.86	8.92	97
	Duct	Duct		9000	12000		21000 (12000 - 21000)	2040 (960 - 2040)	10.11	9.14	97
09+15	Non Duct	Non Duct		9000	15000		24000 (12000 - 24000)	2500 (920 - 2500)	12.39	11.21	97
	Non Duct	Duct		9000	15000		24000 (12000 - 24000)	2520 (940 - 2520)	12.49	11.30	97
	Duct	Non Duct		9000	15000		24000 (12000 - 24000)	2520 (940 - 2520)	12.49	11.30	97
	Duct	Duct		9000	15000		24000 (12000 - 24000)	2540 (960 - 2540)	12.59	11.39	97
09+18	Non Duct	Non Duct		8900	17100		26000 (12000 - 26000)	2800 (920 - 2800)	13.88	12.55	97
	Non Duct	Duct		8900	17100		26000 (12000 - 26000)	2820 (940 - 2820)	13.98	12.64	97
	Duct	Non Duct		8900	17100		26000 (12000 - 26000)	2820 (940 - 2820)	13.98	12.64	97
	Duct	Duct		8900	17100		26000 (12000 - 26000)	2840 (960 - 2840)	14.08	12.73	97
09+24	Non Duct	Non Duct		7600	20400		28000 (12000 - 28000)	3200 (920 - 3200)	15.86	14.34	97
	Duct	Non Duct		7600	20400		28000 (12000 - 28000)	3220 (940 - 3220)	15.96	14.43	97
12+12	Non Duct	Non Duct		12000	12000		24000 (12000 - 24000)	2500 (920 - 2500)	12.39	11.21	97
	Non Duct	Duct		12000	12000		24000 (12000 - 24000)	2520 (940 - 2520)	12.49	11.30	97
	Duct	Duct		12000	12000		24000 (12000 - 24000)	2540 (960 - 2540)	12.59	11.39	97
12+15	Non Duct	Non Duct		11500	14500		26000 (12000 - 26000)	2800 (920 - 2800)	13.88	12.55	97
	Non Duct	Duct		11500	14500		26000 (12000 - 26000)	2820 (940 - 2820)	13.98	12.64	97
	Duct	Non Duct		11500	14500		26000 (12000 - 26000)	2820 (940 - 2820)	13.98	12.64	97
	Duct	Duct		11500	14500		26000 (12000 - 26000)	2840 (960 - 2840)	14.08	12.73	97
12+18	Non Duct	Non Duct		10400	15600		26000 (12000 - 26000)	2800 (920 - 2800)	13.88	12.55	97
	Non Duct	Duct		10400	15600		26000 (12000 - 26000)	2820 (940 - 2820)	13.98	12.64	97
	Duct	Non Duct		10400	15600		26000 (12000 - 26000)	2820 (940 - 2820)	13.98	12.64	97
	Duct	Duct		10400	15600		26000 (12000 - 26000)	2840 (960 - 2840)	14.08	12.73	97

MXZ-3B30NA MXZ-3B30NA-1 COOLING

Indoor units combination	Indoor type			Cooling capacity(BTU/h)				Power consumption (W)	Current(A)		P/F(%)
	A	B	C	Unit A	Unit B	Unit C	Total		208V	230V	
15+15	Non Duct	Non Duct		13000	13000		26000 (12000 - 26000)	2800 (920 - 2800)	13.88	12.55	97
	Non Duct	Duct		13000	13000		26000 (12000 - 26000)	2820 (940 - 2820)	13.98	12.64	97
	Duct	Duct		13000	13000		26000 (12000 - 26000)	2840 (960 - 2840)	14.08	12.73	97
15+18	Non Duct	Non Duct		11700	14300		26000 (12000 - 26000)	2800 (920 - 2800)	13.88	12.55	97
	Non Duct	Duct		11800	14200		26000 (12000 - 26000)	2820 (940 - 2820)	13.98	12.64	97
	Duct	Non Duct		11700	14300		26000 (12000 - 26000)	2820 (940 - 2820)	13.98	12.64	97
	Duct	Duct		11800	14200		26000 (12000 - 26000)	2840 (960 - 2840)	14.08	12.73	97
18+18	Non Duct	Non Duct		13000	13000		26000 (12000 - 26000)	2800 (920 - 2800)	13.88	12.55	97
	Non Duct	Duct		13000	13000		26000 (12000 - 26000)	2820 (940 - 2820)	13.98	12.64	97
	Duct	Duct		13000	13000		26000 (12000 - 26000)	2840 (960 - 2840)	14.08	12.73	97
06+06+06	Non Duct	Non Duct	Non Duct	6500	6500	6500	19500 (12600 - 19500)	1600 (1000 - 1600)	7.93	7.17	97
06+06+09	Non Duct	Non Duct	Non Duct	6500	6500	9000	22000 (12600 - 22000)	1760 (1000 - 1760)	8.72	7.89	97
	Non Duct	Non Duct	Duct	6500	6500	9000	22000 (12600 - 22000)	1940 (1020 - 1940)	9.62	8.70	97
06+06+12	Non Duct	Non Duct	Non Duct	6500	6500	12000	25000 (12600 - 25000)	2230 (1000 - 2230)	11.05	10.00	97
	Non Duct	Non Duct	Duct	6500	6500	12000	25000 (12600 - 25000)	2330 (1020 - 2330)	11.55	10.44	97
06+06+15	Non Duct	Non Duct	Non Duct	6500	6500	14000	27000 (12600 - 27000)	2530 (1000 - 2530)	12.54	11.34	97
	Non Duct	Non Duct	Duct	6500	6500	15000	28000 (12600 - 28000)	2580 (1020 - 2580)	12.79	11.56	97
06+06+18	Non Duct	Non Duct	Non Duct	6100	6100	16200	28400 (12600 - 28400)	3120 (1000 - 3120)	15.46	13.98	97
	Non Duct	Non Duct	Duct	6100	6100	16200	28400 (12600 - 28400)	3190 (1020 - 3190)	15.81	14.30	97
06+09+09	Non Duct	Non Duct	Non Duct	6500	9000	9000	24500 (12600 - 24500)	2230 (1000 - 2230)	11.05	10.00	97
	Non Duct	Non Duct	Duct	6500	9000	9000	24500 (12600 - 24500)	2260 (1020 - 2260)	11.20	10.13	97
	Non Duct	Duct	Duct	6500	9000	9000	24500 (12600 - 24500)	2290 (1040 - 2290)	11.35	10.26	97
06+09+12	Non Duct	Non Duct	Non Duct	6500	9000	12000	27500 (12600 - 27500)	2640 (1000 - 2640)	13.08	11.83	97
	Non Duct	Non Duct	Duct	6500	9000	12000	27500 (12600 - 27500)	2660 (1020 - 2660)	13.18	11.92	97
	Non Duct	Duct	Non Duct	6500	9000	12000	27500 (12600 - 27500)	2670 (1020 - 2670)	13.23	11.97	97
	Non Duct	Duct	Duct	6500	9000	12000	27500 (12600 - 27500)	2690 (1040 - 2690)	13.33	12.06	97
06+09+15	Non Duct	Non Duct	Non Duct	6200	8700	13500	28400 (12600 - 28400)	3120 (1000 - 3120)	15.46	13.98	97
	Non Duct	Non Duct	Duct	6000	8400	14000	28400 (12600 - 28400)	3190 (1020 - 3190)	15.81	14.30	97
	Non Duct	Duct	Non Duct	6200	8200	13500	27900 (12600 - 27900)	3190 (1020 - 3190)	15.81	14.30	97
	Non Duct	Duct	Duct	6000	7900	14000	27900 (12600 - 27900)	3260 (1040 - 3260)	16.16	14.61	97
06+09+18	Non Duct	Non Duct	Non Duct	5600	7800	15000	28400 (12600 - 28400)	3120 (1000 - 3120)	15.46	13.98	97
	Non Duct	Non Duct	Duct	5600	7800	15000	28400 (12600 - 28400)	3190 (1020 - 3190)	15.81	14.30	97
	Non Duct	Duct	Non Duct	5600	7300	15000	27900 (12600 - 27900)	3190 (1020 - 3190)	15.81	14.30	97
	Non Duct	Duct	Duct	5600	7300	15000	27900 (12600 - 27900)	3260 (1040 - 3260)	16.16	14.61	97
06+12+12	Non Duct	Non Duct	Non Duct	6000	11200	11200	28400 (12600 - 28400)	3120 (1000 - 3120)	15.46	13.98	97
	Non Duct	Non Duct	Duct	6000	11200	11200	28400 (12600 - 28400)	3190 (1020 - 3190)	15.81	14.30	97
	Non Duct	Duct	Duct	6000	11200	11200	28400 (12600 - 28400)	3260 (1040 - 3260)	16.16	14.61	97
06+12+15	Non Duct	Non Duct	Non Duct	5700	10500	12200	28400 (12600 - 28400)	3120 (1000 - 3120)	15.46	13.98	97
	Non Duct	Non Duct	Duct	5500	10200	12700	28400 (12600 - 28400)	3190 (1020 - 3190)	15.81	14.30	97
	Non Duct	Duct	Non Duct	5700	10500	12200	28400 (12600 - 28400)	3190 (1020 - 3190)	15.81	14.30	97
	Non Duct	Duct	Duct	5500	10200	12700	28400 (12600 - 28400)	3260 (1040 - 3260)	16.16	14.61	97
06+15+15	Non Duct	Non Duct	Non Duct	5400	11500	11500	28400 (12600 - 28400)	3120 (1000 - 3120)	15.46	13.98	97
	Non Duct	Non Duct	Duct	5200	11200	12000	28400 (12600 - 28400)	3190 (1020 - 3190)	15.81	14.30	97
	Non Duct	Duct	Duct	5000	11700	11700	28400 (12600 - 28400)	3260 (1040 - 3260)	16.16	14.61	97
09+09+09	Non Duct	Non Duct	Non Duct	9000	9000	9000	27000 (12600 - 27000)	2530 (1000 - 2530)	12.54	11.34	97
	Non Duct	Non Duct	Duct	9000	9000	8500	26500 (12600 - 26500)	2670 (1020 - 2670)	13.23	11.97	97
	Non Duct	Duct	Duct	9000	8500	8500	26000 (12600 - 26000)	2810 (1040 - 2810)	13.93	12.60	97
	Duct	Duct	Duct	8500	8500	8500	25500 (12600 - 25500)	2950 (1060 - 2950)	14.62	13.22	97

MXZ-3B30NA MXZ-3B30NA-1 COOLING

Indoor units combination	Indoor type			Cooling capacity(BTU/h)				Power consumption (W)	Current(A)		P/F(%)
	A	B	C	Unit A	Unit B	Unit C	Total		208V	230V	
09+09+12	Non Duct	Non Duct	Non Duct	8500	8500	11400	28400 (12600 - 28400)	3120 (1000 - 3120)	15.46	13.98	97
	Non Duct	Non Duct	Duct	8500	8500	11400	28400 (12600 - 28400)	3190 (1020 - 3190)	15.81	14.30	97
	Non Duct	Duct	Non Duct	8500	8000	11400	27900 (12600 - 27900)	3190 (1020 - 3190)	15.81	14.30	97
	Non Duct	Duct	Duct	8500	8000	11400	27900 (12600 - 27900)	3260 (1040 - 3260)	16.16	14.61	97
	Duct	Duct	Non Duct	8000	8000	11400	27400 (12600 - 27400)	3260 (1040 - 3260)	16.16	14.61	97
	Duct	Duct	Duct	8000	8000	11400	27400 (12600 - 27400)	3330 (1060 - 3330)	16.50	14.93	97
09+09+15	Non Duct	Non Duct	Non Duct	8000	8000	12400	28400 (12600 - 28400)	3120 (1000 - 3120)	15.46	13.98	97
	Non Duct	Non Duct	Duct	7750	7750	12900	28400 (12600 - 28400)	3190 (1020 - 3190)	15.81	14.30	97
	Non Duct	Duct	Non Duct	8000	7500	12400	27900 (12600 - 27900)	3190 (1020 - 3190)	15.81	14.30	97
	Non Duct	Duct	Duct	7750	7250	12900	27900 (12600 - 27900)	3260 (1040 - 3260)	16.16	14.61	97
	Duct	Duct	Non Duct	7500	7500	12400	27400 (12600 - 27400)	3260 (1040 - 3260)	16.16	14.61	97
	Duct	Duct	Duct	7250	7250	12900	27400 (12600 - 27400)	3330 (1060 - 3330)	16.50	14.93	97
09+09+18	Non Duct	Non Duct	Non Duct	7100	7100	14200	28400 (12600 - 28400)	3120 (1000 - 3120)	15.46	13.98	97
	Non Duct	Non Duct	Duct	7100	7100	14200	28400 (12600 - 28400)	3190 (1020 - 3190)	15.81	14.30	97
	Non Duct	Duct	Non Duct	7100	6600	14200	27900 (12600 - 27900)	3190 (1020 - 3190)	15.81	14.30	97
	Non Duct	Duct	Duct	7100	6600	14200	27900 (12600 - 27900)	3260 (1040 - 3260)	16.16	14.61	97
	Duct	Duct	Non Duct	6600	6600	14200	27400 (12600 - 27400)	3260 (1040 - 3260)	16.16	14.61	97
	Duct	Duct	Duct	6600	6600	14200	27400 (12600 - 27400)	3330 (1060 - 3330)	16.50	14.93	97
09+12+12	Non Duct	Non Duct	Non Duct	7800	10300	10300	28400 (12600 - 28400)	3120 (1000 - 3120)	15.46	13.98	97
	Non Duct	Non Duct	Duct	7800	10300	10300	28400 (12600 - 28400)	3190 (1020 - 3190)	15.81	14.30	97
	Non Duct	Duct	Duct	7800	10300	10300	28400 (12600 - 28400)	3260 (1040 - 3260)	16.16	14.61	97
	Duct	Non Duct	Non Duct	7300	10300	10300	27900 (12600 - 27900)	3190 (1020 - 3190)	15.81	14.30	97
	Duct	Non Duct	Duct	7300	10300	10300	27900 (12600 - 27900)	3260 (1040 - 3260)	16.16	14.61	97
	Duct	Duct	Duct	7300	10300	10300	27900 (12600 - 27900)	3330 (1060 - 3330)	16.50	14.93	97
09+12+15	Non Duct	Non Duct	Non Duct	7300	9700	11400	28400 (12600 - 28400)	3120 (1000 - 3120)	15.46	13.98	97
	Non Duct	Non Duct	Duct	7100	9500	11800	28400 (12600 - 28400)	3190 (1020 - 3190)	15.81	14.30	97
	Non Duct	Duct	Non Duct	7300	9700	11400	28400 (12600 - 28400)	3190 (1020 - 3190)	15.81	14.30	97
	Non Duct	Duct	Duct	7100	9500	11800	28400 (12600 - 28400)	3260 (1040 - 3260)	16.16	14.61	97
	Duct	Non Duct	Non Duct	6800	9700	11400	27900 (12600 - 27900)	3190 (1020 - 3190)	15.81	14.30	97
	Duct	Non Duct	Duct	6600	9500	11800	27900 (12600 - 27900)	3260 (1040 - 3260)	16.16	14.61	97
	Duct	Duct	Non Duct	6800	9700	11400	27900 (12600 - 27900)	3260 (1040 - 3260)	16.16	14.61	97
	Duct	Duct	Duct	6600	9500	11800	27900 (12600 - 27900)	3330 (1060 - 3330)	16.50	14.93	97

MXZ-3B30NA MXZ-3B30NA-1 HEATING

Indoor units combination	Indoor type			Heating capacity(BTU/h)				Power consumption (W)	Current(A)		P/F(%)
	A	B	C	Unit A	Unit B	Unit C	Total		208V	230V	
09	Non Duct			7800			7800 (6800 - 14400)	640 (540 - 1460)	3.24	2.93	95
09	Non Duct			10900			10900 (8600 - 15400)	1040 (780 - 1520)	5.26	4.76	95
	Duct			10900			10900 (8600 - 15400)	1100 (780 - 1520)	5.57	5.03	95
12	Non Duct			14400			14400 (8600 - 16400)	1320 (780 - 1600)	6.68	6.04	95
	Duct			13600			13600 (8600 - 16400)	1380 (780 - 1600)	6.98	6.32	95
15	Non Duct			18000			18000 (8600 - 21100)	1880 (780 - 2280)	9.51	8.60	95
	Duct			18000			18000 (8600 - 21100)	1940 (780 - 2280)	9.82	8.88	95
18	Non Duct			21600			21600 (8600 - 24900)	2360 (780 - 2770)	11.94	10.80	95
	Duct			21600			21600 (8600 - 24900)	2410 (780 - 2770)	12.20	11.03	95
24	Non Duct			23200			23200 (8600 - 27800)	2520 (780 - 3000)	12.75	11.53	95
06+06	Non Duct	Non Duct		7800	7800		15600 (11000 - 31000)	1020 (740 - 2560)	5.06	4.57	97
06+09	Non Duct	Non Duct		7800	10900		18700 (11000 - 31000)	1300 (740 - 2560)	6.44	5.83	97
	Non Duct	Duct		7800	10900		18700 (11000 - 31000)	1360 (740 - 2560)	6.74	6.10	97
06+12	Non Duct	Non Duct		7800	14400		22200 (11000 - 31000)	1680 (740 - 2560)	8.33	7.53	97
	Non Duct	Duct		7800	13600		21400 (11000 - 31000)	1740 (740 - 2560)	8.62	7.80	97
06+15	Non Duct	Non Duct		7800	18000		25800 (11000 - 33000)	2080 (740 - 2800)	10.31	9.32	97
	Non Duct	Duct		7800	18000		25800 (11000 - 33000)	2080 (740 - 2800)	10.31	9.32	97
06+18	Non Duct	Non Duct		7200	19800		27000 (11000 - 35000)	2200 (740 - 2920)	10.90	9.86	97
	Non Duct	Duct		7200	19800		27000 (11000 - 35000)	2200 (740 - 2920)	10.90	9.86	97
06+24	Non Duct	Non Duct		6800	20200		27000 (11000 - 35000)	2140 (740 - 2860)	10.61	9.59	97
09+09	Non Duct	Non Duct		10900	10900		21800 (11000 - 31000)	1580 (740 - 2560)	7.83	7.08	97
	Non Duct	Duct		10900	10900		21800 (11000 - 31000)	1640 (740 - 2560)	8.13	7.35	97
	Duct	Duct		10900	10900		21800 (11000 - 31000)	1700 (740 - 2560)	8.43	7.62	97
09+12	Non Duct	Non Duct		10900	14400		25300 (11000 - 33000)	1980 (740 - 2800)	9.81	8.87	97
	Non Duct	Duct		10900	13600		24500 (11000 - 33000)	1980 (740 - 2800)	9.81	8.87	97
	Duct	Non Duct		10900	14400		25300 (11000 - 33000)	1980 (740 - 2800)	9.81	8.87	97
	Duct	Duct		10900	13600		24500 (11000 - 33000)	1980 (740 - 2800)	9.81	8.87	97
09+15	Non Duct	Non Duct		10100	16900		27000 (11000 - 35000)	2200 (740 - 2920)	10.90	9.86	97
	Non Duct	Duct		10100	16900		27000 (11000 - 35000)	2200 (740 - 2920)	10.90	9.86	97
	Duct	Non Duct		10100	16900		27000 (11000 - 35000)	2200 (740 - 2920)	10.90	9.86	97
	Duct	Duct		10100	16900		27000 (11000 - 35000)	2200 (740 - 2920)	10.90	9.86	97
09+18	Non Duct	Non Duct		9000	18000		27000 (11000 - 35000)	2200 (740 - 2920)	10.90	9.86	97
	Non Duct	Duct		9000	18000		27000 (11000 - 35000)	2200 (740 - 2920)	10.90	9.86	97
	Duct	Non Duct		9000	18000		27000 (11000 - 35000)	2200 (740 - 2920)	10.90	9.86	97
	Duct	Duct		9000	18000		27000 (11000 - 35000)	2200 (740 - 2920)	10.90	9.86	97
09+24	Non Duct	Non Duct		7300	19700		27000 (11000 - 35000)	1980 (740 - 2740)	9.81	8.87	97
	Duct	Non Duct		7300	19700		27000 (11000 - 35000)	1980 (740 - 2740)	9.81	8.87	97
12+12	Non Duct	Non Duct		13500	13500		27000 (11000 - 35000)	2200 (740 - 2920)	10.90	9.86	97
	Non Duct	Duct		13900	13100		27000 (11000 - 35000)	2200 (740 - 2920)	10.90	9.86	97
	Duct	Duct		13500	13500		27000 (11000 - 35000)	2200 (740 - 2920)	10.90	9.86	97
12+15	Non Duct	Non Duct		12000	15000		27000 (11000 - 35000)	2160 (740 - 2860)	10.71	9.68	97
	Non Duct	Duct		12000	15000		27000 (11000 - 35000)	2160 (740 - 2860)	10.71	9.68	97
	Duct	Non Duct		11600	15400		27000 (11000 - 35000)	2160 (740 - 2860)	10.71	9.68	97
	Duct	Duct		11600	15400		27000 (11000 - 35000)	2160 (740 - 2860)	10.71	9.68	97
12+18	Non Duct	Non Duct		10800	16200		27000 (11000 - 35000)	2140 (740 - 2860)	10.61	9.59	97
	Non Duct	Duct		10800	16200		27000 (11000 - 35000)	2140 (740 - 2860)	10.61	9.59	97
	Duct	Non Duct		10400	16600		27000 (11000 - 35000)	2140 (740 - 2860)	10.61	9.59	97
	Duct	Duct		10400	16600		27000 (11000 - 35000)	2140 (740 - 2860)	10.61	9.59	97

MXZ-3B30NA MXZ-3B30NA-1 HEATING

Indoor units combination	Indoor type			Heating capacity(BTU/h)				Power consumption (W)	Current(A)		P/F(%)
	A	B	C	Unit A	Unit B	Unit C	Total		208V	230V	
15+15	Non Duct	Non Duct		13500	13500		27000 (11000 - 35000)	2120 (740 - 2800)	10.51	9.50	97
	Non Duct	Duct		13500	13500		27000 (11000 - 35000)	2120 (740 - 2800)	10.51	9.50	97
	Duct	Duct		13500	13500		27000 (11000 - 35000)	2120 (740 - 2800)	10.51	9.50	97
15+18	Non Duct	Non Duct		12300	14700		27000 (11000 - 35000)	2110 (740 - 2800)	10.46	9.46	97
	Non Duct	Duct		12300	14700		27000 (11000 - 35000)	2110 (740 - 2800)	10.46	9.46	97
	Duct	Non Duct		12300	14700		27000 (11000 - 35000)	2110 (740 - 2800)	10.46	9.46	97
	Non Duct	Duct		12300	14700		27000 (11000 - 35000)	2110 (740 - 2800)	10.46	9.46	97
18+18	Non Duct	Non Duct		13500	13500		27000 (11000 - 35000)	2100 (740 - 2800)	10.41	9.41	97
	Non Duct	Duct		13500	13500		27000 (11000 - 35000)	2100 (740 - 2800)	10.41	9.41	97
	Duct	Duct		13500	13500		27000 (11000 - 35000)	2100 (740 - 2800)	10.41	9.41	97
06+06+06	Non Duct	Non Duct	Non Duct	7800	7800	7800	23400 (11400 - 36000)	1750 (740 - 2820)	8.67	7.84	97
06+06+09	Non Duct	Non Duct	Non Duct	7800	7800	10900	26500 (11400 - 36000)	1960 (740 - 2820)	9.71	8.79	97
	Non Duct	Non Duct	Duct	7800	7800	10900	26500 (11400 - 35500)	1960 (740 - 2820)	9.71	8.79	97
06+06+12	Non Duct	Non Duct	Non Duct	7450	7450	13700	28600 (11400 - 36000)	2150 (740 - 2820)	10.66	9.64	97
	Non Duct	Non Duct	Duct	7650	7650	13300	28600 (11400 - 36000)	2150 (740 - 2820)	10.66	9.64	97
06+06+15	Non Duct	Non Duct	Non Duct	6650	6650	15300	28600 (11400 - 36000)	2150 (740 - 2820)	10.66	9.64	97
	Non Duct	Non Duct	Duct	6650	6650	15300	28600 (11400 - 36000)	2150 (740 - 2820)	10.66	9.64	97
06+06+18	Non Duct	Non Duct	Non Duct	6000	6000	16600	28600 (11400 - 36000)	2150 (740 - 2820)	10.66	9.64	97
	Non Duct	Non Duct	Duct	6000	6000	16600	28600 (11400 - 36000)	2150 (740 - 2820)	10.66	9.64	97
06+09+09	Non Duct	Non Duct	Non Duct	7600	10500	10500	28600 (11400 - 36000)	2150 (740 - 2820)	10.66	9.64	97
	Non Duct	Non Duct	Duct	7600	10500	10000	28100 (11400 - 35500)	2190 (740 - 2820)	10.85	9.82	97
	Non Duct	Duct	Duct	7600	10000	10000	27600 (11400 - 35000)	2220 (740 - 2820)	11.00	9.95	97
06+09+12	Non Duct	Non Duct	Non Duct	6800	9400	12400	28600 (11400 - 36000)	2150 (740 - 2820)	10.66	9.64	97
	Non Duct	Non Duct	Duct	6900	9700	12000	28600 (11400 - 36000)	2150 (740 - 2820)	10.66	9.64	97
	Non Duct	Duct	Non Duct	6800	8900	12400	28100 (11400 - 35500)	2190 (740 - 2820)	10.85	9.82	97
	Non Duct	Duct	Duct	6900	9200	12000	28100 (11400 - 35500)	2190 (740 - 2820)	10.85	9.82	97
06+09+15	Non Duct	Non Duct	Non Duct	6100	8500	14000	28600 (11400 - 36000)	2150 (740 - 2820)	10.66	9.64	97
	Non Duct	Non Duct	Duct	6100	8500	14000	28600 (11400 - 36000)	2150 (740 - 2820)	10.66	9.64	97
	Non Duct	Duct	Non Duct	6100	8000	14000	28100 (11400 - 35500)	2190 (740 - 2820)	10.85	9.82	97
	Non Duct	Duct	Duct	6100	8000	14000	28100 (11400 - 35500)	2190 (740 - 2820)	10.85	9.82	97
06+09+18	Non Duct	Non Duct	Non Duct	5600	7700	15300	28600 (11400 - 36000)	2150 (740 - 2820)	10.66	9.64	97
	Non Duct	Non Duct	Duct	5600	7700	15300	28600 (11400 - 36000)	2150 (740 - 2820)	10.66	9.64	97
	Non Duct	Duct	Non Duct	5600	7200	15300	28100 (11400 - 35500)	2190 (740 - 2820)	10.85	9.82	97
	Non Duct	Duct	Duct	5600	7200	15300	28100 (11400 - 35500)	2190 (740 - 2820)	10.85	9.82	97
06+12+12	Non Duct	Non Duct	Non Duct	6100	11250	11250	28600 (11400 - 36000)	2150 (740 - 2820)	10.66	9.64	97
	Non Duct	Non Duct	Duct	6200	11500	10900	28600 (11400 - 36000)	2150 (740 - 2820)	10.66	9.64	97
	Non Duct	Duct	Duct	6400	11100	11100	28600 (11400 - 36000)	2150 (740 - 2820)	10.66	9.64	97
06+12+15	Non Duct	Non Duct	Non Duct	5550	10250	12800	28600 (11400 - 36000)	2150 (740 - 2820)	10.66	9.64	97
	Non Duct	Non Duct	Duct	5550	10250	12800	28600 (11400 - 36000)	2150 (740 - 2820)	10.66	9.64	97
	Non Duct	Duct	Non Duct	5600	9900	13100	28600 (11400 - 36000)	2150 (740 - 2820)	10.66	9.64	97
	Non Duct	Duct	Duct	5600	9900	13100	28600 (11400 - 36000)	2150 (740 - 2820)	10.66	9.64	97
06+15+15	Non Duct	Non Duct	Non Duct	5100	11750	11750	28600 (11400 - 36000)	2150 (740 - 2820)	10.66	9.64	97
	Non Duct	Non Duct	Duct	5100	11750	11750	28600 (11400 - 36000)	2150 (740 - 2820)	10.66	9.64	97
	Non Duct	Duct	Duct	5100	11750	11750	28600 (11400 - 36000)	2150 (740 - 2820)	10.66	9.64	97
09+09+09	Non Duct	Non Duct	Non Duct	9500	9500	9500	28500 (11400 - 36000)	2150 (740 - 2820)	10.66	9.64	97
	Non Duct	Non Duct	Duct	9500	9500	9000	28000 (11400 - 35500)	2180 (740 - 2820)	10.80	9.77	97
	Non Duct	Duct	Duct	9500	9000	9000	27500 (11400 - 35000)	2210 (740 - 2820)	10.95	9.91	97
	Duct	Duct	Duct	9000	9000	9000	27000 (11400 - 34500)	2240 (740 - 2820)	11.10	10.04	97

MXZ-3B30NA MXZ-3B30NA-1 HEATING

Indoor units combination	Indoor type			Heating capacity(BTU/h)				Power consumption (W)	Current(A)		P/F(%)
	A	B	C	Unit A	Unit B	Unit C	Total		208V	230V	
09+09+12	Non Duct	Non Duct	Non Duct	8600	8600	11400	28600 (11400 - 36000)	2150 (740 - 2820)	10.66	9.64	97
	Non Duct	Non Duct	Duct	8800	8800	11000	28600 (11400 - 36000)	2150 (740 - 2820)	10.66	9.64	97
	Non Duct	Duct	Non Duct	8600	8100	11400	28100 (11400 - 35500)	2190 (740 - 2820)	10.85	9.82	97
	Non Duct	Duct	Duct	8800	8300	11000	28100 (11400 - 35500)	2190 (740 - 2820)	10.85	9.82	97
	Duct	Duct	Non Duct	8100	8100	11400	27600 (11400 - 35000)	2220 (740 - 2820)	11.00	9.95	97
	Duct	Duct	Duct	8300	8300	11000	27600 (11400 - 35000)	2220 (740 - 2820)	11.00	9.95	97
09+09+15	Non Duct	Non Duct	Non Duct	7800	7800	13000	28600 (11400 - 36000)	2150 (740 - 2820)	10.66	9.64	97
	Non Duct	Non Duct	Duct	7800	7800	13000	28600 (11400 - 36000)	2150 (740 - 2820)	10.66	9.64	97
	Non Duct	Duct	Non Duct	7800	7300	13000	28100 (11400 - 35500)	2190 (740 - 2820)	10.85	9.82	97
	Non Duct	Duct	Duct	7800	7300	13000	28100 (11400 - 35500)	2190 (740 - 2820)	10.85	9.82	97
	Duct	Duct	Non Duct	7300	7300	13000	27600 (11400 - 35000)	2220 (740 - 2820)	11.00	9.95	97
	Duct	Duct	Duct	7300	7300	13000	27600 (11400 - 35000)	2220 (740 - 2820)	11.00	9.95	97
09+09+18	Non Duct	Non Duct	Non Duct	7200	7200	14200	28600 (11400 - 36000)	2150 (740 - 2820)	10.66	9.64	97
	Non Duct	Non Duct	Duct	7200	7200	14200	28600 (11400 - 36000)	2150 (740 - 2820)	10.66	9.64	97
	Non Duct	Duct	Non Duct	7200	6700	14200	28100 (11400 - 35500)	2190 (740 - 2820)	10.85	9.82	97
	Non Duct	Duct	Duct	7200	6700	14200	28100 (11400 - 35500)	2190 (740 - 2820)	10.85	9.82	97
	Duct	Duct	Non Duct	6700	6700	14200	27600 (11400 - 35000)	2220 (740 - 2820)	11.00	9.95	97
	Duct	Duct	Duct	6700	6700	14200	27600 (11400 - 35000)	2220 (740 - 2820)	11.00	9.95	97
09+12+12	Non Duct	Non Duct	Non Duct	7800	10400	10400	28600 (11400 - 36000)	2150 (740 - 2820)	10.66	9.64	97
	Non Duct	Non Duct	Duct	8000	10600	10000	28600 (11400 - 36000)	2150 (740 - 2820)	10.66	9.64	97
	Non Duct	Duct	Duct	8200	10200	10200	28600 (11400 - 36000)	2150 (740 - 2820)	10.66	9.64	97
	Duct	Non Duct	Non Duct	7300	10400	10400	28100 (11400 - 35500)	2190 (740 - 2820)	10.85	9.82	97
	Duct	Non Duct	Duct	7500	10600	10000	28100 (11400 - 35500)	2190 (740 - 2820)	10.85	9.82	97
	Duct	Duct	Duct	7700	10200	10200	28100 (11400 - 35500)	2190 (740 - 2820)	10.85	9.82	97
09+12+15	Non Duct	Non Duct	Non Duct	7200	9500	11900	28600 (11400 - 36000)	2150 (740 - 2820)	10.66	9.64	97
	Non Duct	Non Duct	Duct	7200	9500	11900	28600 (11400 - 36000)	2150 (740 - 2820)	10.66	9.64	97
	Non Duct	Duct	Non Duct	7300	9200	12100	28600 (11400 - 36000)	2150 (740 - 2820)	10.66	9.64	97
	Non Duct	Duct	Duct	7300	9200	12100	28600 (11400 - 36000)	2150 (740 - 2820)	10.66	9.64	97
	Duct	Non Duct	Non Duct	6700	9500	11900	28100 (11400 - 35500)	2190 (740 - 2820)	10.85	9.82	97
	Duct	Non Duct	Duct	6700	9500	11900	28100 (11400 - 35500)	2190 (740 - 2820)	10.85	9.82	97
	Duct	Duct	Non Duct	6800	9200	12100	28100 (11400 - 35500)	2190 (740 - 2820)	10.85	9.82	97
	Duct	Duct	Duct	6800	9200	12100	28100 (11400 - 35500)	2190 (740 - 2820)	10.85	9.82	97

MXZ-4B36NA COOLING

Indoor units combination	Indoor type				Cooling capacity(BTU/h)					Power consumption (W)	Current(A)		P/F(%)
	A	B	C	D	Unit A	Unit B	Unit C	Unit D	Total		208V	230V	
06	Non Duct				6500				6500 (5200 - 6500)	580 (460 - 580)	2.94	2.65	95
09	Non Duct				9000				9000 (7200 - 9000)	800 (580 - 800)	4.05	3.66	95
	Duct				9000				9000 (7200 - 9000)	820 (600 - 820)	4.15	3.75	95
12	Non Duct				12000				12000 (7200 - 12000)	1000 (580 - 1000)	5.06	4.58	95
	Duct				12000				12000 (7200 - 12000)	1020 (600 - 1020)	5.16	4.67	95
15	Non Duct				14000				14000 (7200 - 15000)	1320 (580 - 1320)	6.68	6.04	95
	Duct				15000				15000 (7200 - 15000)	1340 (600 - 1340)	6.78	6.13	95
18	Non Duct				17200				17200 (7200 - 17200)	1570 (580 - 1570)	7.95	7.19	95
	Duct				17200				17200 (7200 - 17200)	1590 (600 - 1590)	8.05	7.28	95
24	Non Duct				22000				22000 (7200 - 22000)	2200 (580 - 2200)	11.13	10.07	95
06+06	Non Duct	Non Duct			6500	6500			13000 (12000 - 13000)	960 (920 - 960)	4.76	4.30	97
06+09	Non Duct	Non Duct			6500	9000			15500 (12000 - 15500)	1200 (920 - 1200)	5.95	5.38	97
	Non Duct	Duct			6500	9000			15500 (12000 - 15500)	1260 (940 - 1260)	6.25	5.65	97
06+12	Non Duct	Non Duct			6500	12000			18500 (12000 - 18500)	1540 (920 - 1540)	7.63	6.90	97
	Non Duct	Duct			6500	12000			18500 (12000 - 18500)	1600 (940 - 1600)	7.93	7.17	97
06+15	Non Duct	Non Duct			6500	14000			20500 (12000 - 20500)	1820 (920 - 1820)	9.02	8.16	97
	Non Duct	Duct			6500	15000			21500 (12000 - 21500)	1940 (940 - 1940)	9.62	8.70	97
06+18	Non Duct	Non Duct			6500	17200			23700 (12000 - 23700)	2440 (920 - 2440)	12.09	10.94	97
	Non Duct	Duct			6500	17200			23700 (12000 - 23700)	2460 (940 - 2460)	12.19	11.03	97
06+24	Non Duct	Non Duct			5900	20100			26000 (12000 - 26000)	2800 (920 - 2800)	13.88	12.55	97
09+09	Non Duct	Non Duct			9000	9000			18000 (12000 - 18000)	1480 (920 - 1480)	7.34	6.63	97
	Non Duct	Duct			9000	9000			18000 (12000 - 18000)	1660 (940 - 1660)	8.23	7.44	97
	Duct	Duct			9000	9000			18000 (12000 - 18000)	1840 (960 - 1840)	9.12	8.25	97
09+12	Non Duct	Non Duct			9000	12000			21000 (12000 - 21000)	1940 (920 - 1940)	9.62	8.70	97
	Non Duct	Duct			9000	12000			21000 (12000 - 21000)	1990 (940 - 1990)	9.86	8.92	97
	Duct	Non Duct			9000	12000			21000 (12000 - 20600)	1990 (940 - 1990)	9.86	8.92	97
	Duct	Duct			9000	12000			21000 (12000 - 20600)	2040 (960 - 2040)	10.11	9.14	97
09+15	Non Duct	Non Duct			9000	14000			23000 (12000 - 23000)	2500 (920 - 2500)	12.39	11.21	97
	Non Duct	Duct			9000	15000			24000 (12000 - 24000)	2520 (940 - 2520)	12.49	11.30	97
	Duct	Non Duct			9000	14000			23000 (12000 - 23000)	2520 (940 - 2520)	12.49	11.30	97
	Duct	Duct			9000	15000			24000 (12000 - 24000)	2540 (960 - 2540)	12.59	11.39	97
09+18	Non Duct	Non Duct			8900	17100			26000 (12000 - 26000)	2800 (920 - 2800)	13.88	12.55	97
	Non Duct	Duct			8900	17100			26000 (12000 - 26000)	2820 (940 - 2820)	13.98	12.64	97
	Duct	Non Duct			8900	17100			26000 (12000 - 26000)	2820 (940 - 2820)	13.98	12.64	97
	Duct	Duct			8900	17100			26000 (12000 - 26000)	2840 (960 - 2840)	14.08	12.73	97
09+24	Non Duct	Non Duct			7600	20400			28000 (12000 - 28000)	3200 (920 - 3200)	15.86	14.34	97
	Duct	Non Duct			7600	20400			28000 (12000 - 28000)	3220 (940 - 3220)	15.96	14.43	97
12+12	Non Duct	Non Duct			12000	12000			24000 (12000 - 24000)	2500 (920 - 2500)	12.39	11.21	97
	Non Duct	Duct			12000	12000			24000 (12000 - 24000)	2520 (940 - 2520)	12.49	11.30	97
	Duct	Duct			12000	12000			24000 (12000 - 24000)	2540 (960 - 2540)	12.59	11.39	97
12+15	Non Duct	Non Duct			12000	14000			26000 (12000 - 26000)	2800 (920 - 2800)	13.88	12.55	97
	Non Duct	Duct			11500	14500			26000 (12000 - 26000)	2820 (940 - 2820)	13.98	12.64	97
	Duct	Non Duct			12000	14000			26000 (12000 - 26000)	2820 (940 - 2820)	13.98	12.64	97
	Duct	Duct			11500	14500			26000 (12000 - 26000)	2840 (960 - 2840)	14.08	12.73	97
12+18	Non Duct	Non Duct			10400	15600			26000 (12000 - 26000)	2800 (920 - 2800)	13.88	12.55	97
	Non Duct	Duct			10400	15600			26000 (12000 - 26000)	2820 (940 - 2820)	13.98	12.64	97
	Duct	Non Duct			10400	15600			26000 (12000 - 26000)	2820 (940 - 2820)	13.98	12.64	97
	Duct	Duct			10400	15600			26000 (12000 - 26000)	2840 (960 - 2840)	14.08	12.73	97
15+15	Non Duct	Non Duct			13000	13000			26000 (12000 - 26000)	2800 (920 - 2800)	13.88	12.55	97
	Non Duct	Duct			13000	13000			26000 (12000 - 26000)	2820 (940 - 2820)	13.98	12.64	97
	Duct	Duct			13000	13000			26000 (12000 - 26000)	2840 (960 - 2840)	14.08	12.73	97
15+18	Non Duct	Non Duct			11700	14300			26000 (12000 - 26000)	2800 (920 - 2800)	13.88	12.55	97
	Non Duct	Duct			11800	14200			26000 (12000 - 26000)	2820 (940 - 2820)	13.98	12.64	97
	Duct	Non Duct			11700	14300			26000 (12000 - 26000)	2820 (940 - 2820)	13.98	12.64	97
	Duct	Duct			11800	14200			26000 (12000 - 26000)	2840 (960 - 2840)	14.08	12.73	97
18+18	Non Duct	Non Duct			13000	13000			26000 (12000 - 26000)	2800 (920 - 2800)	13.88	12.55	97
	Non Duct	Duct			13000	13000			26000 (12000 - 26000)	2820 (940 - 2820)	13.98	12.64	97
	Duct	Duct			13000	13000			26000 (12000 - 26000)	2840 (960 - 2840)	14.08	12.73	97

MXZ-4B36NA COOLING

Indoor units combination	Indoor type				Cooling capacity(BTU/h)					Power consumption (W)	Current(A)		P/F(%)
	A	B	C	D	Unit A	Unit B	Unit C	Unit D	Total		208V	230V	
06+06+06	Non Duct	Non Duct	Non Duct		6500	6500	6500		19500 (12600 - 19500)	1600 (1000 - 1600)	7.93	7.17	97
06+06+09	Non Duct	Non Duct	Non Duct		6500	6500	9000		22000 (12600 - 22000)	1760 (1000 - 1760)	8.72	7.89	97
	Non Duct	Non Duct	Duct		6500	6500	9000		22000 (12600 - 22000)	1940 (1020 - 1940)	9.62	8.70	97
06+06+12	Non Duct	Non Duct	Non Duct		6500	6500	12000		25000 (12600 - 25000)	2230 (1000 - 2230)	11.05	10.00	97
	Non Duct	Non Duct	Duct		6500	6500	12000		25000 (12600 - 25000)	2330 (1020 - 2330)	11.55	10.44	97
06+06+15	Non Duct	Non Duct	Non Duct		6500	6500	14000		27000 (12600 - 27000)	2530 (1000 - 2530)	12.54	11.34	97
	Non Duct	Non Duct	Duct		6500	6500	15000		28000 (12600 - 28000)	2580 (1020 - 2580)	12.79	11.56	97
06+06+18	Non Duct	Non Duct	Non Duct		6500	6500	17200		30200 (12600 - 30200)	3100 (1000 - 3100)	15.36	13.90	97
	Non Duct	Non Duct	Duct		6500	6500	17200		30200 (12600 - 30200)	3120 (1020 - 3120)	15.46	13.98	97
06+06+24	Non Duct	Non Duct	Non Duct		6000	6000	20100		32100 (12600 - 32100)	3500 (1000 - 3500)	17.35	15.69	97
06+09+09	Non Duct	Non Duct	Non Duct		6500	9000	9000		24500 (12600 - 24500)	2230 (1000 - 2230)	11.05	10.00	97
	Non Duct	Non Duct	Duct		6500	9000	9000		24500 (12600 - 24500)	2260 (1020 - 2260)	11.20	10.13	97
	Non Duct	Duct	Duct		6500	9000	9000		24500 (12600 - 24500)	2290 (1040 - 2290)	11.35	10.26	97
06+09+12	Non Duct	Non Duct	Non Duct		6500	9000	12000		27500 (12600 - 27500)	2640 (1000 - 2640)	13.08	11.83	97
	Non Duct	Non Duct	Duct		6500	9000	12000		27500 (12600 - 27500)	2660 (1020 - 2660)	13.18	11.92	97
	Non Duct	Duct	Non Duct		6500	9000	12000		27500 (12600 - 27500)	2670 (1020 - 2670)	13.23	11.97	97
	Non Duct	Duct	Duct		6500	9000	12000		27500 (12600 - 27500)	2690 (1040 - 2690)	13.33	12.06	97
06+09+15	Non Duct	Non Duct	Non Duct		6500	9000	14000		29500 (12600 - 29500)	2990 (1000 - 2990)	14.82	13.40	97
	Non Duct	Non Duct	Duct		6500	9000	15000		30500 (12600 - 30500)	3010 (1020 - 3010)	14.92	13.49	97
	Non Duct	Duct	Non Duct		6500	9000	14000		29500 (12600 - 29500)	3020 (1020 - 3020)	14.97	13.54	97
	Non Duct	Duct	Duct		6500	9000	15000		30500 (12600 - 30500)	3040 (1040 - 3040)	15.07	13.63	97
06+09+18	Non Duct	Non Duct	Non Duct		6400	8800	16900		32100 (12600 - 32100)	3500 (1000 - 3500)	17.35	15.69	97
	Non Duct	Non Duct	Duct		6400	8800	16900		32100 (12600 - 32100)	3520 (1020 - 3520)	17.45	15.78	97
	Non Duct	Duct	Non Duct		6400	8400	16900		31700 (12600 - 31700)	3530 (1020 - 3530)	17.50	15.82	97
	Non Duct	Duct	Duct		6400	8400	16900		31700 (12600 - 31700)	3550 (1040 - 3550)	17.60	15.91	97
06+09+24	Non Duct	Non Duct	Non Duct		5600	7700	18800		32100 (12600 - 32100)	3500 (1000 - 3500)	17.35	15.69	97
	Non Duct	Duct	Non Duct		5600	7300	18800		31700 (12600 - 31700)	3530 (1020 - 3530)	17.50	15.82	97
06+12+12	Non Duct	Non Duct	Non Duct		6500	12000	12000		30500 (12600 - 30500)	3150 (1000 - 3150)	15.61	14.12	97
	Non Duct	Non Duct	Duct		6500	12000	12000		30500 (12600 - 30500)	3170 (1020 - 3170)	15.71	14.21	97
	Non Duct	Duct	Duct		6500	12000	12000		30500 (12600 - 30500)	3190 (1040 - 3190)	15.81	14.30	97
06+12+15	Non Duct	Non Duct	Non Duct		6400	11900	13800		32100 (12600 - 32100)	3500 (1000 - 3500)	17.35	15.69	97
	Non Duct	Non Duct	Duct		6200	11500	14400		32100 (12600 - 32100)	3520 (1020 - 3520)	17.45	15.78	97
	Non Duct	Duct	Non Duct		6400	11900	13800		32100 (12600 - 32100)	3520 (1020 - 3520)	17.45	15.78	97
	Non Duct	Duct	Duct		6200	11500	14400		32100 (12600 - 32100)	3540 (1040 - 3540)	17.55	15.87	97
06+12+18	Non Duct	Non Duct	Non Duct		5800	10800	15500		32100 (12600 - 32100)	3500 (1000 - 3500)	17.35	15.69	97
	Non Duct	Non Duct	Duct		5800	10800	15500		32100 (12600 - 32100)	3520 (1020 - 3520)	17.45	15.78	97
	Non Duct	Duct	Non Duct		5800	10800	15500		32100 (12600 - 32100)	3520 (1020 - 3520)	17.45	15.78	97
	Non Duct	Duct	Duct		5800	10800	15500		32100 (12600 - 32100)	3540 (1040 - 3540)	17.55	15.87	97
06+15+15	Non Duct	Non Duct	Non Duct		6100	13000	13000		32100 (12600 - 32100)	3500 (1000 - 3500)	17.35	15.69	97
	Non Duct	Non Duct	Duct		5900	12700	13500		32100 (12600 - 32100)	3520 (1020 - 3520)	17.45	15.78	97
	Non Duct	Duct	Duct		5700	13200	13200		32100 (12600 - 32100)	3540 (1040 - 3540)	17.55	15.87	97
06+15+18	Non Duct	Non Duct	Non Duct		5600	11900	14600		32100 (12600 - 32100)	3500 (1000 - 3500)	17.35	15.69	97
	Non Duct	Non Duct	Duct		5600	11900	14600		32100 (12600 - 32100)	3520 (1020 - 3520)	17.45	15.78	97
	Non Duct	Duct	Non Duct		5400	12400	14300		32100 (12600 - 32100)	3520 (1020 - 3520)	17.45	15.78	97
	Non Duct	Duct	Duct		5400	12400	14300		32100 (12600 - 32100)	3540 (1040 - 3540)	17.55	15.87	97
06+18+18	Non Duct	Non Duct	Non Duct		5100	13500	13500		32100 (12600 - 32100)	3500 (1000 - 3500)	17.35	15.69	97
	Non Duct	Non Duct	Duct		5100	13500	13500		32100 (12600 - 32100)	3520 (1020 - 3520)	17.45	15.78	97
	Non Duct	Duct	Duct		5100	13500	13500		32100 (12600 - 32100)	3540 (1040 - 3540)	17.55	15.87	97
09+09+09	Non Duct	Non Duct	Non Duct		9000	9000	9000		27000 (12600 - 27000)	2530 (1000 - 2530)	12.54	11.34	97
	Non Duct	Non Duct	Duct		9000	9000	8600		26600 (12600 - 26600)	2670 (1020 - 2670)	13.23	11.97	97
	Non Duct	Duct	Duct		9000	8600	8600		26200 (12600 - 26200)	2810 (1040 - 2810)	13.93	12.60	97
	Duct	Duct	Duct		8600	8600	8600		25800 (12600 - 25800)	2950 (1060 - 2950)	14.62	13.22	97
09+09+12	Non Duct	Non Duct	Non Duct		9000	9000	12000		30000 (12600 - 30000)	3270 (1000 - 3270)	16.21	14.66	97
	Non Duct	Non Duct	Duct		9000	9000	12000		30000 (12600 - 30000)	3290 (1020 - 3290)	16.31	14.75	97
	Non Duct	Duct	Non Duct		9000	8600	12000		29600 (12600 - 29600)	3300 (1020 - 3300)	16.36	14.79	97
	Non Duct	Duct	Duct		9000	8600	12000		29600 (12600 - 29600)	3320 (1040 - 3320)	16.46	14.88	97
	Duct	Duct	Non Duct		8600	8600	12000		29200 (12600 - 29200)	3330 (1040 - 3330)	16.50	14.93	97
	Duct	Duct	Duct		8600	8600	12000		29200 (12600 - 29200)	3350 (1060 - 3350)	16.60	15.02	97

MXZ-4B36NA COOLING

Indoor units combination	Indoor type				Cooling capacity(BTU/h)					Power consumption (W)	Current(A)		P/F(%)
	A	B	C	D	Unit A	Unit B	Unit C	Unit D	Total		208V	230V	
09+09+15	Non Duct	Non Duct	Non Duct		9000	9000	14000		32000 (12600 - 32100)	3500 (1000 - 3500)	17.35	15.69	97
	Non Duct	Non Duct	Duct		8800	8800	14500		32100 (12600 - 32100)	3520 (1020 - 3520)	17.45	15.78	97
	Non Duct	Duct	Non Duct		9000	8700	14000		31700 (12600 - 31700)	3530 (1020 - 3530)	17.50	15.82	97
	Non Duct	Duct	Duct		8800	8400	14500		31700 (12600 - 31700)	3550 (1040 - 3550)	17.60	15.91	97
	Duct	Duct	Non Duct		8650	8650	14000		31300 (12600 - 31300)	3560 (1040 - 3560)	17.64	15.96	97
	Duct	Duct	Duct		8400	8400	14500		31300 (12600 - 31300)	3580 (1060 - 3580)	17.74	16.05	97
09+09+18	Non Duct	Non Duct	Non Duct		8200	8200	15700		32100 (12600 - 32100)	3500 (1000 - 3500)	17.35	15.69	97
	Non Duct	Non Duct	Duct		8100	8100	15900		32100 (12600 - 32100)	3520 (1020 - 3520)	17.45	15.78	97
	Non Duct	Duct	Non Duct		8200	7800	15700		31700 (12600 - 31700)	3530 (1020 - 3530)	17.50	15.82	97
	Non Duct	Duct	Duct		8100	7700	15900		31700 (12600 - 31700)	3550 (1040 - 3550)	17.60	15.91	97
	Duct	Duct	Non Duct		7800	7800	15700		31300 (12600 - 31300)	3560 (1040 - 3560)	17.64	15.96	97
	Duct	Duct	Duct		7700	7700	15900		31300 (12600 - 31300)	3580 (1060 - 3580)	17.74	16.05	97
09+09+24	Non Duct	Non Duct	Non Duct		6900	6900	18300		32100 (12600 - 32100)	3500 (1000 - 3500)	17.35	15.69	97
	Non Duct	Duct	Non Duct		6900	6500	18300		31700 (12600 - 31700)	3530 (1020 - 3530)	17.50	15.82	97
	Duct	Duct	Non Duct		6500	6500	18300		31300 (12600 - 31300)	3560 (1040 - 3560)	17.64	15.96	97
09+12+12	Non Duct	Non Duct	Non Duct		8700	11700	11700		32100 (12600 - 32100)	3500 (1000 - 3500)	17.35	15.69	97
	Non Duct	Non Duct	Duct		8700	11700	11700		32100 (12600 - 32100)	3520 (1020 - 3520)	17.45	15.78	97
	Non Duct	Duct	Duct		8700	11700	11700		32100 (12600 - 32100)	3540 (1040 - 3540)	17.55	15.87	97
	Duct	Non Duct	Non Duct		8300	11700	11700		31700 (12600 - 31700)	3530 (1020 - 3530)	17.50	15.82	97
	Duct	Non Duct	Duct		8300	11700	11700		31700 (12600 - 31700)	3550 (1040 - 3550)	17.60	15.91	97
	Duct	Duct	Duct		8300	11700	11700		31700 (12600 - 31700)	3570 (1060 - 3570)	17.69	16.00	97
09+12+15	Non Duct	Non Duct	Non Duct		8300	11000	12800		32100 (12600 - 32100)	3500 (1000 - 3500)	17.35	15.69	97
	Non Duct	Non Duct	Duct		8000	10700	13400		32100 (12600 - 32100)	3520 (1020 - 3520)	17.45	15.78	97
	Non Duct	Duct	Non Duct		8300	11000	12800		32100 (12600 - 32100)	3520 (1020 - 3520)	17.45	15.78	97
	Non Duct	Duct	Duct		8000	10700	13400		32100 (12600 - 32100)	3540 (1040 - 3540)	17.55	15.87	97
	Duct	Non Duct	Non Duct		7900	11000	12800		31700 (12600 - 31700)	3530 (1020 - 3530)	17.50	15.82	97
	Duct	Non Duct	Duct		7600	10700	13400		31700 (12600 - 31700)	3550 (1040 - 3550)	17.60	15.91	97
	Duct	Duct	Non Duct		7900	11000	12800		31700 (12600 - 31700)	3550 (1040 - 3550)	17.60	15.91	97
	Duct	Duct	Duct		7600	10700	13400		31700 (12600 - 31700)	3570 (1060 - 3570)	17.69	16.00	97
09+12+18	Non Duct	Non Duct	Non Duct		7500	10000	14600		32100 (12600 - 32100)	3500 (1000 - 3500)	17.35	15.69	97
	Non Duct	Non Duct	Duct		7500	10000	14600		32100 (12600 - 32100)	3520 (1020 - 3520)	17.45	15.78	97
	Non Duct	Duct	Non Duct		7500	10000	14600		32100 (12600 - 32100)	3520 (1020 - 3520)	17.45	15.78	97
	Non Duct	Duct	Duct		7500	10000	14600		32100 (12600 - 32100)	3540 (1040 - 3540)	17.55	15.87	97
	Duct	Non Duct	Non Duct		7100	10000	14600		31700 (12600 - 31700)	3530 (1020 - 3530)	17.50	15.82	97
	Duct	Non Duct	Duct		7100	10000	14600		31700 (12600 - 31700)	3550 (1040 - 3550)	17.60	15.91	97
	Duct	Duct	Non Duct		7100	10000	14600		31700 (12600 - 31700)	3530 (1040 - 3530)	17.50	15.82	97
	Duct	Duct	Duct		7100	10000	14600		31700 (12600 - 31700)	3570 (1060 - 3570)	17.69	16.00	97
09+15+15	Non Duct	Non Duct	Non Duct		7700	12200	12200		32100 (12600 - 32100)	3500 (1000 - 3500)	17.35	15.69	97
	Non Duct	Non Duct	Duct		7600	11800	12700		32100 (12600 - 32100)	3520 (1020 - 3520)	17.45	15.78	97
	Non Duct	Duct	Duct		7500	12300	12300		32100 (12600 - 32100)	3540 (1040 - 3540)	17.55	15.87	97
	Duct	Non Duct	Non Duct		7700	12000	12000		31700 (12600 - 31700)	3530 (1020 - 3530)	17.50	15.82	97
	Duct	Non Duct	Duct		7400	11700	12600		31700 (12600 - 31700)	3550 (1040 - 3550)	17.60	15.91	97
	Duct	Duct	Duct		7100	12300	12300		31700 (12600 - 31700)	3570 (1060 - 3570)	17.69	16.00	97
09+15+18	Non Duct	Non Duct	Non Duct		7200	11200	13700		32100 (12600 - 32100)	3500 (1000 - 3500)	17.35	15.69	97
	Non Duct	Non Duct	Duct		7200	11200	13700		32100 (12600 - 32100)	3520 (1020 - 3520)	17.45	15.78	97
	Non Duct	Duct	Non Duct		7000	11600	13500		32100 (12600 - 32100)	3520 (1020 - 3520)	17.45	15.78	97
	Non Duct	Duct	Duct		7000	11600	13500		32100 (12600 - 32100)	3540 (1040 - 3520)	17.55	15.87	97
	Duct	Non Duct	Non Duct		7100	11000	13600		31700 (12600 - 31700)	3530 (1020 - 3530)	17.50	15.82	97
	Duct	Non Duct	Duct		7100	11000	13600		31700 (12600 - 31700)	3550 (1040 - 3550)	17.60	15.91	97
	Duct	Duct	Non Duct		6600	11600	13500		31700 (12600 - 31700)	3550 (1040 - 3550)	17.60	15.91	97
	Duct	Duct	Duct		6600	11600	13500		31700 (12600 - 31700)	3570 (1060 - 3570)	17.69	16.00	97
09+18+18	Non Duct	Non Duct	Non Duct		6500	12800	12800		32100 (12600 - 32100)	3500 (1000 - 3500)	17.35	15.69	97
	Non Duct	Non Duct	Duct		6500	12800	12800		32100 (12600 - 32100)	3520 (1020 - 3520)	17.45	15.78	97
	Non Duct	Duct	Duct		6500	12800	12800		32100 (12600 - 32100)	3540 (1040 - 3540)	17.55	15.87	97
	Duct	Non Duct	Non Duct		6100	12800	12800		31700 (12600 - 31700)	3530 (1020 - 3530)	17.50	15.82	97
	Duct	Non Duct	Duct		6100	12800	12800		31700 (12600 - 31700)	3550 (1040 - 3550)	17.60	15.91	97
	Duct	Duct	Duct		6100	12800	12800		31700 (12600 - 31700)	3570 (1060 - 3570)	17.69	16.00	97

MXZ-4B36NA COOLING

Indoor units combination	Indoor type				Cooling capacity(BTU/h)					Power consumption (W)	Current(A)		P/F(%)
	A	B	C	D	Unit A	Unit B	Unit C	Unit D	Total		208V	230V	
12+12+12	Non Duct	Non Duct	Non Duct		10700	10700	10700		32100 (12600 - 32100)	3500 (1000 - 3500)	17.35	15.69	97
	Non Duct	Non Duct	Duct		10700	10700	10700		32100 (12600 - 32100)	3520 (1020 - 3520)	17.45	15.78	97
	Non Duct	Duct	Duct		10700	10700	10700		32100 (12600 - 32100)	3540 (1040 - 3540)	17.55	15.87	97
	Duct	Duct	Duct		10700	10700	10700		32100 (12600 - 32100)	3560 (1060 - 3560)	17.64	15.96	97
12+12+15	Non Duct	Non Duct	Non Duct		10100	10100	11900		32100 (12600 - 32100)	3500 (1000 - 3500)	17.35	15.69	97
	Non Duct	Non Duct	Duct		9900	9900	12300		32100 (12600 - 32100)	3520 (1020 - 3520)	17.45	15.78	97
	Non Duct	Duct	Non Duct		10100	10100	11900		32100 (12600 - 32100)	3520 (1020 - 3520)	17.45	15.78	97
	Non Duct	Duct	Duct		9900	9900	12300		32100 (12600 - 32100)	3540 (1040 - 3540)	17.55	15.87	97
	Duct	Duct	Non Duct		10100	10100	11900		32100 (12600 - 32100)	3540 (1040 - 3540)	17.55	15.87	97
	Duct	Duct	Duct		9900	9900	12300		32100 (12600 - 32100)	3560 (1060 - 3560)	17.64	15.96	97
12+12+18	Non Duct	Non Duct	Non Duct		9300	9300	13500		32100 (12600 - 32100)	3500 (1000 - 3500)	17.35	15.69	97
	Non Duct	Non Duct	Duct		9300	9300	13500		32100 (12600 - 32100)	3520 (1020 - 3520)	17.45	15.78	97
	Non Duct	Duct	Non Duct		9300	9300	13500		32100 (12600 - 32100)	3520 (1020 - 3520)	17.45	15.78	97
	Non Duct	Duct	Duct		9300	9300	13500		32100 (12600 - 32100)	3540 (1040 - 3540)	17.55	15.87	97
	Duct	Duct	Non Duct		9300	9300	13500		32100 (12600 - 32100)	3540 (1040 - 3540)	17.55	15.87	97
	Duct	Duct	Duct		9300	9300	13500		32100 (12600 - 32100)	3560 (1060 - 3560)	17.64	15.96	97
12+15+15	Non Duct	Non Duct	Non Duct		9700	11200	11200		32100 (12600 - 32100)	3500 (1000 - 3500)	17.35	15.69	97
	Non Duct	Non Duct	Duct		9400	11000	11700		32100 (12600 - 32100)	3520 (1020 - 3520)	17.45	15.78	97
	Non Duct	Duct	Duct		9100	11500	11500		32100 (12600 - 32100)	3540 (1040 - 3540)	17.55	15.87	97
	Duct	Non Duct	Non Duct		9700	11200	11200		32100 (12600 - 32100)	3520 (1020 - 3520)	17.45	15.78	97
	Duct	Non Duct	Duct		9400	11000	11700		32100 (12600 - 32100)	3540 (1040 - 3540)	17.55	15.87	97
	Duct	Duct	Duct		9100	11500	11500		32100 (12600 - 32100)	3560 (1060 - 3560)	17.64	15.96	97
06+06+06+06	Non Duct	Non Duct	Non Duct	Non Duct	6500	6500	6500	6500	26000 (12600 - 26000)	2080 (1000 - 2080)	10.10	9.13	99
06+06+06+09	Non Duct	Non Duct	Non Duct	Non Duct	6500	6500	6500	9000	28500 (12600 - 28500)	2390 (1000 - 2390)	11.61	10.50	99
	Non Duct	Non Duct	Non Duct	Duct	6500	6500	6500	9000	28500 (12600 - 28500)	2420 (1020 - 2420)	11.75	10.63	99
06+06+06+12	Non Duct	Non Duct	Non Duct	Non Duct	6500	6500	6500	12000	31500 (12600 - 31500)	2870 (1000 - 2870)	13.94	12.60	99
	Non Duct	Non Duct	Non Duct	Duct	6500	6500	6500	12000	31500 (12600 - 31500)	2890 (1020 - 2890)	14.03	12.69	99
06+06+06+15	Non Duct	Non Duct	Non Duct	Non Duct	6500	6500	6500	14000	33500 (12600 - 33500)	3210 (1000 - 3210)	15.59	14.10	99
	Non Duct	Non Duct	Non Duct	Duct	6500	6500	6500	15000	34500 (12600 - 34500)	3230 (1020 - 3230)	15.69	14.19	99
06+06+09+09	Non Duct	Non Duct	Non Duct	Non Duct	6500	6500	9000	9000	31000 (12600 - 31000)	2790 (1000 - 2790)	13.55	12.25	99
	Non Duct	Non Duct	Non Duct	Duct	6500	6500	9000	9000	31000 (12600 - 31000)	2820 (1020 - 2820)	13.69	12.38	99
	Non Duct	Non Duct	Duct	Duct	6500	6500	9000	9000	31000 (12600 - 31000)	2850 (1040 - 2850)	13.84	12.52	99
06+06+09+12	Non Duct	Non Duct	Non Duct	Non Duct	6500	6500	9000	12000	34000 (12600 - 34000)	3290 (1000 - 3290)	15.98	14.45	99
	Non Duct	Non Duct	Non Duct	Duct	6500	6500	9000	12000	34000 (12600 - 34000)	3310 (1020 - 3310)	16.07	14.54	99
	Non Duct	Non Duct	Duct	Non Duct	6500	6500	9000	12000	34000 (12600 - 34000)	3320 (1020 - 3320)	16.12	14.58	99
	Non Duct	Non Duct	Duct	Duct	6500	6500	9000	12000	34000 (12600 - 34000)	3340 (1040 - 3340)	16.22	14.67	99
06+06+09+15	Non Duct	Non Duct	Non Duct	Non Duct	6400	6400	8800	13800	35400 (12600 - 36400)	3760 (1000 - 3900)	18.26	16.51	99
	Non Duct	Non Duct	Non Duct	Duct	6200	6200	8600	14200	35200 (12600 - 36400)	3780 (1020 - 3920)	18.36	16.60	99
	Non Duct	Non Duct	Duct	Non Duct	6300	6300	8800	13800	35200 (12600 - 36000)	3800 (1020 - 3940)	18.45	16.69	99
	Non Duct	Non Duct	Duct	Duct	6100	6100	8600	14200	35000 (12600 - 36000)	3820 (1040 - 3960)	18.55	16.78	99
06+06+12+12	Non Duct	Non Duct	Non Duct	Non Duct	6200	6200	11500	11500	35400 (12600 - 36400)	3760 (1000 - 3900)	18.26	16.51	99
	Non Duct	Non Duct	Non Duct	Duct	6200	6200	11400	11400	35200 (12600 - 36400)	3780 (1020 - 3920)	18.36	16.60	99
	Non Duct	Non Duct	Duct	Duct	6200	6200	11300	11300	35000 (12600 - 36400)	3800 (1040 - 3940)	18.45	16.69	99
06+06+12+15	Non Duct	Non Duct	Non Duct	Non Duct	6000	6000	11200	12800	36000 (12600 - 36400)	3820 (1000 - 3900)	18.55	16.78	99
	Non Duct	Non Duct	Non Duct	Duct	5800	5800	10600	13600	35800 (12600 - 36400)	3840 (1020 - 3920)	18.65	16.86	99
	Non Duct	Non Duct	Duct	Non Duct	6000	6000	11000	12800	35800 (12600 - 36400)	3840 (1020 - 3920)	18.65	16.86	99
	Non Duct	Non Duct	Duct	Duct	5800	5800	10600	13400	35600 (12600 - 36400)	3860 (1040 - 3940)	18.75	16.95	99
06+06+15+15	Non Duct	Non Duct	Non Duct	Non Duct	5700	5700	12300	12300	36000 (12600 - 36400)	3820 (1000 - 3900)	18.55	16.78	99
	Non Duct	Non Duct	Non Duct	Duct	5500	5500	12000	12800	35800 (12600 - 36400)	3840 (1020 - 3920)	18.65	16.86	99
	Non Duct	Non Duct	Duct	Duct	5400	5400	12400	12400	35600 (12600 - 36400)	3860 (1040 - 3940)	18.75	16.95	99
06+09+09+09	Non Duct	Non Duct	Non Duct	Non Duct	6500	9000	9000	9000	33500 (12600 - 33500)	3210 (1000 - 3210)	15.59	14.10	99
	Non Duct	Non Duct	Non Duct	Duct	6500	9000	9000	9000	33500 (12600 - 33500)	3240 (1020 - 3240)	15.73	14.23	99
	Non Duct	Non Duct	Duct	Duct	6500	9000	9000	9000	33500 (12600 - 33500)	3270 (1040 - 3270)	15.88	14.36	99
	Non Duct	Duct	Duct	Duct	6500	9000	9000	9000	33500 (12600 - 33500)	3300 (1060 - 3300)	16.03	14.49	99

MXZ-4B36NA COOLING

Indoor units combination	Indoor type				Cooling capacity(BTU/h)					Power consumption (W)	Current(A)		P/F(%)
	A	B	C	D	Unit A	Unit B	Unit C	Unit D	Total		208V	230V	
06+09+09+12	Non Duct	Non Duct	Non Duct	Non Duct	6400	8700	8700	11600	35400 (12600 - 36400)	3760 (1000 - 3900)	18.26	16.51	99
	Non Duct	Non Duct	Non Duct	Duct	6300	8700	8700	11500	35200 (12600 - 36400)	3780 (1020 - 3920)	18.36	16.60	99
	Non Duct	Non Duct	Duct	Non Duct	6300	8700	8700	11500	35200 (12600 - 36000)	3800 (1020 - 3930)	18.45	16.69	99
	Non Duct	Non Duct	Duct	Duct	6200	8700	8700	11400	35000 (12600 - 36000)	3820 (1040 - 3950)	18.55	16.78	99
	Non Duct	Duct	Duct	Non Duct	6200	8700	8700	11400	35000 (12600 - 35600)	3840 (1040 - 3960)	18.65	16.86	99
	Non Duct	Duct	Duct	Duct	6200	8600	8600	11400	34800 (12600 - 35600)	3860 (1060 - 3980)	18.75	16.95	99
06+09+09+15	Non Duct	Non Duct	Non Duct	Non Duct	6100	8400	8400	13100	36000 (12600 - 36400)	3820 (1000 - 3900)	18.55	16.78	99
	Non Duct	Non Duct	Non Duct	Duct	5800	8200	8200	13600	35800 (12600 - 36400)	3840 (1020 - 3920)	18.65	16.86	99
	Non Duct	Non Duct	Duct	Non Duct	6000	8300	8300	13000	35600 (12600 - 36000)	3850 (1020 - 3930)	18.70	16.91	99
	Non Duct	Non Duct	Duct	Duct	5800	8100	8100	13600	35600 (12600 - 36000)	3870 (1040 - 3950)	18.79	17.00	99
	Non Duct	Duct	Duct	Non Duct	5900	8300	8300	12900	35400 (12600 - 35600)	3880 (1040 - 3960)	18.84	17.04	99
	Non Duct	Duct	Duct	Duct	5800	8000	8000	13400	35200 (12600 - 35600)	3900 (1060 - 3980)	18.94	17.13	99
06+09+12+12	Non Duct	Non Duct	Non Duct	Non Duct	5900	8300	10900	10900	36000 (12600 - 36400)	3820 (1000 - 3900)	18.55	16.78	99
	Non Duct	Non Duct	Non Duct	Duct	5900	8300	10900	10900	36000 (12600 - 36400)	3840 (1020 - 3920)	18.65	16.86	99
	Non Duct	Non Duct	Duct	Duct	5900	8300	10900	10900	36000 (12600 - 36400)	3860 (1040 - 3940)	18.75	16.95	99
	Non Duct	Duct	Non Duct	Non Duct	5900	8100	10800	10800	35600 (12600 - 36000)	3850 (1020 - 3930)	18.70	16.91	99
	Non Duct	Duct	Non Duct	Duct	5900	8100	10800	10800	35600 (12600 - 36000)	3870 (1040 - 3950)	18.79	17.00	99
	Non Duct	Duct	Duct	Duct	5900	8100	10800	10800	35600 (12600 - 36000)	3890 (1060 - 3970)	18.89	17.08	99
06+09+12+15	Non Duct	Non Duct	Non Duct	Non Duct	5600	7800	10500	12100	36000 (12600 - 36400)	3820 (1000 - 3900)	18.55	16.78	99
	Non Duct	Non Duct	Non Duct	Duct	5500	7600	10200	12700	36000 (12600 - 36400)	3840 (1020 - 3920)	18.65	16.86	99
	Non Duct	Non Duct	Duct	Non Duct	5600	7800	10500	12100	36000 (12600 - 36400)	3840 (1020 - 3920)	18.65	16.86	99
	Non Duct	Non Duct	Duct	Duct	5500	7600	10200	12700	36000 (12600 - 36400)	3860 (1040 - 3940)	18.75	16.95	99
	Non Duct	Duct	Non Duct	Non Duct	5600	7700	10300	12000	35600 (12600 - 36000)	3850 (1020 - 3930)	18.70	16.91	99
	Non Duct	Duct	Non Duct	Duct	5400	7500	10100	12600	35600 (12600 - 36000)	3870 (1040 - 3950)	18.79	17.00	99
	Non Duct	Duct	Duct	Non Duct	5600	7700	10300	12000	35600 (12600 - 36000)	3870 (1040 - 3950)	18.79	17.00	99
	Non Duct	Duct	Duct	Duct	5400	7500	10100	12600	35600 (12600 - 36000)	3890 (1060 - 3970)	18.89	17.08	99
09+09+09+09	Non Duct	Non Duct	Non Duct	Non Duct	8850	8850	8850	8850	35400 (12600 - 36400)	3760 (1000 - 3900)	18.26	16.51	99
	Non Duct	Non Duct	Non Duct	Duct	8850	8850	8850	8600	35150 (12600 - 36000)	3800 (1020 - 3930)	18.45	16.69	99
	Non Duct	Non Duct	Duct	Duct	8850	8850	8600	8600	34900 (12600 - 35600)	3850 (1040 - 3960)	18.70	16.91	99
	Non Duct	Duct	Duct	Duct	8850	8600	8600	8600	34650 (12600 - 35200)	3900 (1060 - 3990)	18.94	17.13	99
	Duct	Duct	Duct	Duct	8600	8600	8600	8600	34400 (12600 - 34800)	3940 (1080 - 4020)	19.13	17.30	99
09+09+09+12	Non Duct	Non Duct	Non Duct	Non Duct	8300	8300	8300	11100	36000 (12600 - 36400)	3820 (1000 - 3900)	18.55	16.78	99
	Non Duct	Non Duct	Non Duct	Duct	8300	8300	8300	11100	36000 (12600 - 36400)	3840 (1020 - 3920)	18.65	16.86	99
	Non Duct	Non Duct	Duct	Non Duct	8300	8300	7900	11100	35600 (12600 - 36000)	3850 (1020 - 3930)	18.70	16.91	99
	Non Duct	Non Duct	Duct	Duct	8300	8300	7900	11100	35600 (12600 - 36000)	3870 (1040 - 3950)	18.79	17.00	99
	Non Duct	Duct	Duct	Non Duct	8300	7900	7900	11100	35200 (12600 - 35600)	3880 (1040 - 3960)	18.84	17.04	99
	Non Duct	Duct	Duct	Duct	8300	7900	7900	11100	35200 (12600 - 35600)	3900 (1060 - 3980)	18.94	17.13	99
	Duct	Duct	Duct	Non Duct	7900	7900	7900	11100	34800 (12600 - 35200)	3910 (1060 - 3990)	18.99	17.17	99
	Duct	Duct	Duct	Duct	7900	7900	7900	11100	34800 (12600 - 35200)	3930 (1080 - 4010)	19.09	17.26	99
09+09+09+15	Non Duct	Non Duct	Non Duct	Non Duct	7900	7900	7900	12300	36000 (12600 - 36400)	3820 (1000 - 3900)	18.55	16.78	99
	Non Duct	Non Duct	Non Duct	Duct	7700	7700	7700	12900	36000 (12600 - 36400)	3840 (1020 - 3920)	18.65	16.86	99
	Non Duct	Non Duct	Duct	Non Duct	7900	7900	7500	12300	35600 (12600 - 36000)	3850 (1020 - 3930)	18.70	16.91	99
	Non Duct	Non Duct	Duct	Duct	7700	7700	7300	12900	35600 (12600 - 36000)	3870 (1040 - 3950)	18.79	17.00	99
	Non Duct	Duct	Duct	Non Duct	7900	7500	7500	12300	35200 (12600 - 35600)	3880 (1040 - 3960)	18.84	17.04	99
	Non Duct	Duct	Duct	Duct	7700	7300	7300	12900	35200 (12600 - 35600)	3900 (1060 - 3980)	18.94	17.13	99
	Duct	Duct	Duct	Non Duct	7500	7500	7500	12300	34800 (12600 - 35200)	3910 (1060 - 3990)	18.99	17.17	99
	Duct	Duct	Duct	Duct	7300	7300	7300	12900	34800 (12600 - 35200)	3930 (1080 - 4010)	19.09	17.26	99
09+09+12+12	Non Duct	Non Duct	Non Duct	Non Duct	7700	7700	10300	10300	36000 (12600 - 36400)	3820 (1000 - 3900)	18.55	16.78	99
	Non Duct	Non Duct	Non Duct	Duct	7700	7700	10300	10300	36000 (12600 - 36400)	3840 (1020 - 3920)	18.65	16.86	99
	Non Duct	Non Duct	Duct	Duct	7700	7700	10300	10300	36000 (12600 - 36400)	3860 (1040 - 3940)	18.75	16.95	99
	Non Duct	Duct	Non Duct	Non Duct	7700	7300	10300	10300	35600 (12600 - 36000)	3850 (1020 - 3930)	18.70	16.91	99
	Non Duct	Duct	Non Duct	Duct	7700	7300	10300	10300	35600 (12600 - 36000)	3870 (1040 - 3950)	18.79	17.00	99
	Non Duct	Duct	Duct	Duct	7700	7300	10300	10300	35600 (12600 - 36000)	3890 (1060 - 3970)	18.89	17.08	99
	Duct	Duct	Non Duct	Non Duct	7300	7300	10300	10300	35200 (12600 - 35600)	3880 (1040 - 3960)	18.84	17.04	99
	Duct	Duct	Non Duct	Duct	7300	7300	10300	10300	35200 (12600 - 35600)	3900 (1060 - 3980)	18.94	17.13	99
	Duct	Duct	Duct	Duct	7300	7300	10300	10300	35200 (12600 - 35600)	3920 (1080 - 4000)	19.04	17.22	99

MXZ-4B36NA HEATING

Indoor units combination	Indoor type				Heating capacity(BTU/h)					Power consumption (W)	Current(A)		P/F(%)
	A	B	C	D	Unit A	Unit B	Unit C	Unit D	Total		208V	230V	
06	Non Duct				7800				7800 (6800 - 14400)	640 (540 - 1460)	3.24	2.93	95
09	Non Duct				10900				10900 (8600 - 15400)	1040 (780 - 1520)	5.26	4.76	95
	Duct				10900				10900 (8600 - 15400)	1100 (780 - 1520)	5.57	5.03	95
12	Non Duct				14400				14400 (8600 - 16400)	1320 (780 - 1600)	6.68	6.04	95
	Duct				13600				13600 (8600 - 16400)	1380 (780 - 1600)	6.98	6.32	95
15	Non Duct				18000				18000 (8600 - 21100)	1880 (780 - 2280)	9.51	8.60	95
	Duct				18000				18000 (8600 - 21100)	1940 (780 - 2280)	9.82	8.88	95
18	Non Duct				21600				21600 (8600 - 24900)	2360 (780 - 2770)	11.94	10.80	95
	Duct				21600				21600 (8600 - 24900)	2410 (780 - 2770)	12.20	11.03	95
24	Non Duct				23200				23200 (8600 - 27800)	2520 (780 - 3000)	12.75	11.53	95
06+06	Non Duct	Non Duct			7800	7800			15600 (11000 - 31000)	1020 (740 - 2560)	5.06	4.57	97
06+09	Non Duct	Non Duct			7800	10900			18700 (11000 - 31000)	1300 (740 - 2560)	6.44	5.83	97
	Non Duct	Duct			7800	10900			18700 (11000 - 31000)	1360 (740 - 2560)	6.74	6.10	97
06+12	Non Duct	Non Duct			7800	14400			22200 (11000 - 31000)	1680 (740 - 2560)	8.33	7.53	97
	Non Duct	Duct			7800	13600			21400 (11000 - 31000)	1740 (740 - 2560)	8.62	7.80	97
06+15	Non Duct	Non Duct			7800	18000			25800 (11000 - 33000)	2080 (740 - 2800)	10.31	9.32	97
	Non Duct	Duct			7800	18000			25800 (11000 - 33000)	2080 (740 - 2800)	10.31	9.32	97
06+18	Non Duct	Non Duct			7200	19800			27000 (11000 - 35000)	2200 (740 - 2920)	10.90	9.86	97
	Non Duct	Duct			7200	19800			27000 (11000 - 35000)	2200 (740 - 2920)	10.90	9.86	97
06+24	Non Duct	Non Duct			6800	20200			27000 (11000 - 35000)	2140 (740 - 2860)	10.61	9.59	97
09+09	Non Duct	Non Duct			10900	10900			21800 (11000 - 31000)	1580 (740 - 2560)	7.83	7.08	97
	Non Duct	Duct			10900	10900			21800 (11000 - 31000)	1640 (740 - 2560)	8.13	7.35	97
	Duct	Duct			10900	10900			21800 (11000 - 31000)	1700 (740 - 2560)	8.43	7.62	97
09+12	Non Duct	Non Duct			10900	14400			25300 (11000 - 33000)	1980 (740 - 2800)	9.81	8.87	97
	Non Duct	Duct			10900	13600			24500 (11000 - 33000)	1980 (740 - 2800)	9.81	8.87	97
	Duct	Non Duct			10900	14400			25300 (11000 - 33000)	1980 (740 - 2800)	9.81	8.87	97
	Duct	Duct			10900	13600			24500 (11000 - 33000)	1980 (740 - 2800)	9.81	8.87	97
09+15	Non Duct	Non Duct			10100	16900			27000 (11000 - 35000)	2200 (740 - 2920)	10.90	9.86	97
	Non Duct	Duct			10100	16900			27000 (11000 - 35000)	2200 (740 - 2920)	10.90	9.86	97
	Duct	Non Duct			10100	16900			27000 (11000 - 35000)	2200 (740 - 2920)	10.90	9.86	97
	Duct	Duct			10100	16900			27000 (11000 - 35000)	2200 (740 - 2920)	10.90	9.86	97
09+18	Non Duct	Non Duct			9000	18000			27000 (11000 - 35000)	2200 (740 - 2920)	10.90	9.86	97
	Non Duct	Duct			9000	18000			27000 (11000 - 35000)	2200 (740 - 2920)	10.90	9.86	97
	Duct	Non Duct			9000	18000			27000 (11000 - 35000)	2200 (740 - 2920)	10.90	9.86	97
	Duct	Duct			9000	18000			27000 (11000 - 35000)	2200 (740 - 2920)	10.90	9.86	97
09+24	Non Duct	Non Duct			7300	19700			27000 (11000 - 35000)	1980 (740 - 2740)	9.81	8.87	97
	Duct	Non Duct			7300	19700			27000 (11000 - 35000)	1980 (740 - 2740)	9.81	8.87	97
12+12	Non Duct	Non Duct			13500	13500			27000 (11000 - 35000)	2200 (740 - 2920)	10.90	9.86	97
	Non Duct	Duct			13900	13100			27000 (11000 - 35000)	2200 (740 - 2920)	10.90	9.86	97
	Duct	Duct			13500	13500			27000 (11000 - 35000)	2200 (740 - 2920)	10.90	9.86	97
12+15	Non Duct	Non Duct			12000	15000			27000 (11000 - 35000)	2160 (740 - 2860)	10.71	9.68	97
	Non Duct	Duct			12000	15000			27000 (11000 - 35000)	2160 (740 - 2860)	10.71	9.68	97
	Duct	Non Duct			11600	15400			27000 (11000 - 35000)	2160 (740 - 2860)	10.71	9.68	97
	Duct	Duct			11600	15400			27000 (11000 - 35000)	2160 (740 - 2860)	10.71	9.68	97
12+18	Non Duct	Non Duct			10800	16200			27000 (11000 - 35000)	2140 (740 - 2860)	10.61	9.59	97
	Non Duct	Duct			10800	16200			27000 (11000 - 35000)	2140 (740 - 2860)	10.61	9.59	97
	Duct	Non Duct			10400	16600			27000 (11000 - 35000)	2140 (740 - 2860)	10.61	9.59	97
	Duct	Duct			10400	16600			27000 (11000 - 35000)	2140 (740 - 2860)	10.61	9.59	97
15+15	Non Duct	Non Duct			13500	13500			27000 (11000 - 35000)	2120 (740 - 2800)	10.51	9.50	97
	Non Duct	Duct			13500	13500			27000 (11000 - 35000)	2120 (740 - 2800)	10.51	9.50	97
	Duct	Duct			13500	13500			27000 (11000 - 35000)	2120 (740 - 2800)	10.51	9.50	97
15+18	Non Duct	Non Duct			12300	14700			27000 (11000 - 35000)	2110 (740 - 2800)	10.46	9.46	97
	Non Duct	Duct			12300	14700			27000 (11000 - 35000)	2110 (740 - 2800)	10.46	9.46	97
	Duct	Non Duct			12300	14700			27000 (11000 - 35000)	2110 (740 - 2800)	10.46	9.46	97
	Dcut	Duct			12300	14700			27000 (11000 - 35000)	2110 (740 - 2800)	10.46	9.46	97
18+18	Non Duct	Non Duct			13500	13500			27000 (11000 - 35000)	2100 (740 - 2800)	10.41	9.41	97
	Non Duct	Duct			13500	13500			27000 (11000 - 35000)	2100 (740 - 2800)	10.41	9.41	97
	Duct	Duct			13500	13500			27000 (11000 - 35000)	2100 (740 - 2800)	10.41	9.41	97

MXZ-4B36NA HEATING

Indoor units combination	Indoor type				Heating capacity(BTU/h)					Power consumption (W)	Current(A)		P/F(%)
	A	B	C	D	Unit A	Unit B	Unit C	Unit D	Total		208V	230V	
06+06+06	Non Duct	Non Duct	Non Duct		7800	7800	7800		23400 (11400 - 36000)	1750 (740 - 2820)	8.67	7.84	97
06+06+09	Non Duct	Non Duct	Non Duct		7800	7800	10900		26500 (11400 - 36000)	1960 (740 - 2820)	9.71	8.79	97
	Non Duct	Non Duct	Duct		7800	7800	10900		26500 (11400 - 35600)	1960 (740 - 2820)	9.71	8.79	97
06+06+12	Non Duct	Non Duct	Non Duct		7800	7800	14400		30000 (11400 - 36000)	2440 (740 - 2820)	12.09	10.94	97
	Non Duct	Non Duct	Duct		7800	7800	13600		29200 (11400 - 36000)	2440 (740 - 2820)	12.09	10.94	97
06+06+15	Non Duct	Non Duct	Non Duct		7500	7500	17400		32400 (11400 - 36000)	2640 (740 - 2820)	13.08	11.83	97
	Non Duct	Non Duct	Duct		7500	7500	17400		32400 (11400 - 36000)	2640 (740 - 2820)	13.08	11.83	97
06+06+18	Non Duct	Non Duct	Non Duct		6800	6800	18800		32400 (11400 - 36000)	2640 (740 - 2820)	13.08	11.83	97
	Non Duct	Non Duct	Duct		6800	6800	18800		32400 (11400 - 36000)	2640 (740 - 2820)	13.08	11.83	97
06+06+24	Non Duct	Non Duct	Non Duct		6500	6500	19400		32400 (11400 - 36000)	2640 (740 - 2820)	13.08	11.83	97
06+09+09	Non Duct	Non Duct	Non Duct		7800	10900	10900		29600 (11400 - 36000)	2360 (740 - 2820)	11.70	10.58	97
	Non Duct	Non Duct	Duct		7800	10900	10900		29600 (11400 - 35600)	2360 (740 - 2820)	11.70	10.58	97
	Non Duct	Duct	Duct		7800	10900	10900		29600 (11400 - 35200)	2360 (740 - 2820)	11.70	10.58	97
06+09+12	Non Duct	Non Duct	Non Duct		7600	10700	14100		32400 (11400 - 36000)	2640 (740 - 2820)	13.08	11.83	97
	Non Duct	Non Duct	Duct		7800	10900	13600		32300 (11400 - 36000)	2640 (740 - 2820)	13.08	11.83	97
	Non Duct	Duct	Non Duct		7600	10300	14100		32000 (11400 - 35600)	2640 (740 - 2820)	13.08	11.83	97
	Non Duct	Duct	Duct		7800	10500	13600		31900 (11400 - 35600)	2640 (740 - 2820)	13.08	11.83	97
06+09+15	Non Duct	Non Duct	Non Duct		6900	9600	15900		32400 (11400 - 36000)	2640 (740 - 2820)	13.08	11.83	97
	Non Duct	Non Duct	Duct		6900	9600	15900		32400 (11400 - 36000)	2640 (740 - 2820)	13.08	11.83	97
	Non Duct	Duct	Non Duct		6900	9200	15900		32000 (11400 - 35600)	2640 (740 - 2820)	13.08	11.83	97
	Non Duct	Duct	Duct		6900	9200	15900		32000 (11400 - 35600)	2640 (740 - 2820)	13.08	11.83	97
06+09+18	Non Duct	Non Duct	Non Duct		6200	8800	17400		32400 (11400 - 36000)	2640 (740 - 2820)	13.08	11.83	97
	Non Duct	Non Duct	Duct		6200	8800	17400		32400 (11400 - 36000)	2640 (740 - 2820)	13.08	11.83	97
	Non Duct	Duct	Non Duct		6200	8400	17400		32000 (11400 - 35600)	2640 (740 - 2820)	13.08	11.83	97
	Non Duct	Duct	Duct		6200	8400	17400		32000 (11400 - 35600)	2640 (740 - 2820)	13.08	11.83	97
06+09+24	Non Duct	Non Duct	Non Duct		6000	8400	18000		32400 (11400 - 36000)	2640 (740 - 2820)	13.08	11.83	97
	Non Duct	Duct	Non Duct		6000	8000	18000		32000 (11400 - 35600)	2640 (740 - 2820)	13.08	11.83	97
06+12+12	Non Duct	Non Duct	Non Duct		7000	12700	12700		32400 (11400 - 36000)	2640 (740 - 2820)	13.08	11.83	97
	Non Duct	Non Duct	Duct		7100	13000	12300		32400 (11400 - 36000)	2640 (740 - 2820)	13.08	11.83	97
	Non Duct	Duct	Duct		7200	12600	12600		32400 (11400 - 36000)	2640 (740 - 2820)	13.08	11.83	97
06+12+15	Non Duct	Non Duct	Non Duct		6300	11600	14500		32400 (11400 - 36000)	2640 (740 - 2820)	13.08	11.83	97
	Non Duct	Non Duct	Duct		6300	11600	14500		32400 (11400 - 36000)	2640 (740 - 2820)	13.08	11.83	97
	Non Duct	Duct	Non Duct		6400	11200	14800		32400 (11400 - 36000)	2640 (740 - 2820)	13.08	11.83	97
	Non Duct	Duct	Duct		6400	11200	14800		32400 (11400 - 36000)	2640 (740 - 2820)	13.08	11.83	97
06+12+18	Non Duct	Non Duct	Non Duct		5700	10700	16000		32400 (11400 - 36000)	2640 (740 - 2820)	13.08	11.83	97
	Non Duct	Non Duct	Duct		5700	10700	16000		32400 (11400 - 36000)	2640 (740 - 2820)	13.08	11.83	97
	Non Duct	Duct	Non Duct		5900	10200	16300		32400 (11400 - 36000)	2640 (740 - 2820)	13.08	11.83	97
	Non Duct	Duct	Duct		5900	10200	16300		32400 (11400 - 36000)	2640 (740 - 2820)	13.08	11.83	97
06+15+15	Non Duct	Non Duct	Non Duct		5800	13300	13300		32400 (11400 - 36000)	2640 (740 - 2820)	13.08	11.83	97
	Non Duct	Non Duct	Duct		5800	13300	13300		32400 (11400 - 36000)	2640 (740 - 2820)	13.08	11.83	97
	Non Duct	Duct	Duct		5800	13300	13300		32400 (11400 - 36000)	2640 (740 - 2820)	13.08	11.83	97
06+15+18	Non Duct	Non Duct	Non Duct		5300	12300	14800		32400 (11400 - 36000)	2640 (740 - 2820)	13.08	11.83	97
	Non Duct	Non Duct	Duct		5300	12300	14800		32400 (11400 - 36000)	2640 (740 - 2820)	13.08	11.83	97
	Non Duct	Duct	Non Duct		5300	12300	14800		32400 (11400 - 36000)	2640 (740 - 2820)	13.08	11.83	97
	Non Duct	Duct	Duct		5300	12300	14800		32400 (11400 - 36000)	2640 (740 - 2820)	13.08	11.83	97
06+18+18	Non Duct	Non Duct	Non Duct		5000	13700	13700		32400 (11400 - 36000)	2640 (740 - 2820)	13.08	11.83	97
	Non Duct	Non Duct	Duct		5000	13700	13700		32400 (11400 - 36000)	2640 (740 - 2820)	13.08	11.83	97
	Non Duct	Duct	Duct		5000	13700	13700		32400 (11400 - 36000)	2640 (740 - 2820)	13.08	11.83	97
09+09+09	Non Duct	Non Duct	Non Duct		10800	10800	10800		32400 (11400 - 36000)	2640 (740 - 2820)	13.08	11.83	97
	Non Duct	Non Duct	Duct		10800	10800	10400		32000 (11400 - 35600)	2640 (740 - 2820)	13.08	11.83	97
	Non Duct	Duct	Duct		10800	10400	10400		31600 (11400 - 35200)	2640 (740 - 2820)	13.08	11.83	97
	Duct	Duct	Duct		10400	10400	10400		31200 (11400 - 34800)	2640 (740 - 2820)	13.08	11.83	97
09+09+12	Non Duct	Non Duct	Non Duct		9800	9800	12800		32400 (11400 - 36000)	2640 (740 - 2820)	13.08	11.83	97
	Non Duct	Non Duct	Duct		10000	10000	12400		32400 (11400 - 36000)	2640 (740 - 2820)	13.08	11.83	97
	Non Duct	Duct	Non Duct		9800	9400	12800		32000 (11400 - 35600)	2640 (740 - 2820)	13.08	11.83	97
	Non Duct	Duct	Duct		10000	9600	12400		32000 (11400 - 35600)	2640 (740 - 2820)	13.08	11.83	97
	Duct	Duct	Non Duct		9400	9400	12800		31600 (11400 - 35200)	2640 (740 - 2820)	13.08	11.83	97
	Duct	Duct	Duct		9600	9600	12400		31600 (11400 - 35200)	2640 (740 - 2820)	13.08	11.83	97

MXZ-4B36NA HEATING

Indoor units combination	Indoor type				Heating capacity(BTU/h)					Power consumption (W)	Current(A)		P/F(%)
	A	B	C	D	Unit A	Unit B	Unit C	Unit D	Total		208V	230V	
09+09+15	Non Duct	Non Duct	Non Duct		8900	8900	14600		32400 (11400 - 36000)	2640 (740 - 2820)	13.08	11.83	97
	Non Duct	Non Duct	Duct		8900	8900	14600		32400 (11400 - 36000)	2640 (740 - 2820)	13.08	11.83	97
	Non Duct	Duct	Non Duct		8900	8500	14600		32000 (11400 - 35600)	2640 (740 - 2820)	13.08	11.83	97
	Non Duct	Duct	Duct		8900	8500	14600		32000 (11400 - 35600)	2640 (740 - 2820)	13.08	11.83	97
	Duct	Duct	Non Duct		8500	8500	14600		31600 (11400 - 35200)	2640 (740 - 2820)	13.08	11.83	97
	Duct	Duct	Duct		8500	8500	14600		31600 (11400 - 35200)	2640 (740 - 2820)	13.08	11.83	97
09+09+18	Non Duct	Non Duct	Non Duct		8100	8100	16200		32400 (11400 - 36000)	2640 (740 - 2820)	13.08	11.83	97
	Non Duct	Non Duct	Duct		8100	8100	16200		32400 (11400 - 36000)	2640 (740 - 2820)	13.08	11.83	97
	Non Duct	Duct	Non Duct		8100	7700	16200		32000 (11400 - 35600)	2640 (740 - 2820)	13.08	11.83	97
	Non Duct	Duct	Duct		8100	7700	16200		32000 (11400 - 35600)	2640 (740 - 2820)	13.08	11.83	97
	Duct	Duct	Non Duct		7700	7700	16200		31600 (11400 - 35200)	2640 (740 - 2820)	13.08	11.83	97
	Duct	Duct	Duct		7700	7700	16200		31600 (11400 - 35200)	2640 (740 - 2820)	13.08	11.83	97
09+09+24	Non Duct	Non Duct	Non Duct		7800	7800	16800		32400 (11400 - 36000)	2640 (740 - 2820)	13.08	11.83	97
	Non Duct	Duct	Non Duct		7800	7400	16800		32000 (11400 - 35600)	2640 (740 - 2820)	13.08	11.83	97
	Duct	Duct	Non Duct		7400	7400	16800		31600 (11400 - 35200)	2640 (740 - 2820)	13.08	11.83	97
09+12+12	Non Duct	Non Duct	Non Duct		9000	11700	11700		32400 (11400 - 36000)	2640 (740 - 2820)	13.08	11.83	97
	Non Duct	Non Duct	Duct		9100	12000	11300		32400 (11400 - 36000)	2640 (740 - 2820)	13.08	11.83	97
	Non Duct	Duct	Duct		9400	11500	11500		32400 (11400 - 36000)	2640 (740 - 2820)	13.08	11.83	97
	Duct	Non Duct	Non Duct		8600	11700	11700		32000 (11400 - 35600)	2640 (740 - 2820)	13.08	11.83	97
	Duct	Non Duct	Duct		8700	12000	11300		32000 (11400 - 35600)	2640 (740 - 2820)	13.08	11.83	97
	Duct	Duct	Duct		9000	11500	11500		32000 (11400 - 35600)	2640 (740 - 2820)	13.08	11.83	97
09+12+15	Non Duct	Non Duct	Non Duct		8200	10800	13400		32400 (11400 - 36000)	2640 (740 - 2820)	13.08	11.83	97
	Non Duct	Non Duct	Duct		8200	10800	13400		32400 (11400 - 36000)	2640 (740 - 2820)	13.08	11.83	97
	Non Duct	Duct	Non Duct		8300	10400	13700		32400 (11400 - 36000)	2640 (740 - 2820)	13.08	11.83	97
	Non Duct	Duct	Duct		8300	10400	13700		32400 (11400 - 36000)	2640 (740 - 2820)	13.08	11.83	97
	Duct	Non Duct	Non Duct		7800	10800	13400		32000 (11400 - 35600)	2640 (740 - 2820)	13.08	11.83	97
	Duct	Non Duct	Duct		7800	10800	13400		32000 (11400 - 35600)	2640 (740 - 2820)	13.08	11.83	97
	Duct	Duct	Non Duct		7900	10400	13700		32000 (11400 - 35600)	2640 (740 - 2820)	13.08	11.83	97
	Duct	Duct	Duct		7900	10400	13700		32000 (11400 - 35600)	2640 (740 - 2820)	13.08	11.83	97
09+12+18	Non Duct	Non Duct	Non Duct		7600	9900	14900		32400 (11400 - 36000)	2640 (740 - 2820)	13.08	11.83	97
	Non Duct	Non Duct	Duct		7600	9900	14900		32400 (11400 - 36000)	2640 (740 - 2820)	13.08	11.83	97
	Non Duct	Duct	Non Duct		7600	9600	15200		32400 (11400 - 36000)	2640 (740 - 2820)	13.08	11.83	97
	Non Duct	Duct	Duct		7600	9600	15200		32400 (11400 - 36000)	2640 (740 - 2820)	13.08	11.83	97
	Duct	Non Duct	Non Duct		7200	9900	14900		32000 (11400 - 35600)	2640 (740 - 2820)	13.08	11.83	97
	Duct	Non Duct	Duct		7200	9900	14900		32000 (11400 - 35600)	2640 (740 - 2820)	13.08	11.83	97
	Duct	Duct	Non Duct		7200	9600	15200		32000 (11400 - 35600)	2640 (740 - 2820)	13.08	11.83	97
	Duct	Duct	Duct		7200	9600	15200		32000 (11400 - 35600)	2640 (740 - 2820)	13.08	11.83	97
09+15+15	Non Duct	Non Duct	Non Duct		7600	12400	12400		32400 (11400 - 36000)	2640 (740 - 2820)	13.08	11.83	97
	Non Duct	Non Duct	Duct		7600	12400	12400		32400 (11400 - 36000)	2640 (740 - 2820)	13.08	11.83	97
	Non Duct	Duct	Duct		7600	12400	12400		32400 (11400 - 36000)	2640 (740 - 2820)	13.08	11.83	97
	Duct	Non Duct	Non Duct		7200	12400	12400		32000 (11400 - 35600)	2640 (740 - 2820)	13.08	11.83	97
	Duct	Non Duct	Duct		7200	12400	12400		32000 (11400 - 35600)	2640 (740 - 2820)	13.08	11.83	97
	Duct	Duct	Duct		7200	12400	12400		32000 (11400 - 35600)	2640 (740 - 2820)	13.08	11.83	97
09+15+18	Non Duct	Non Duct	Non Duct		7000	11500	13900		32400 (11400 - 36000)	2640 (740 - 2820)	13.08	11.83	97
	Non Duct	Non Duct	Duct		7000	11500	13900		32400 (11400 - 36000)	2640 (740 - 2820)	13.08	11.83	97
	Non Duct	Duct	Non Duct		7000	11500	13900		32400 (11400 - 36000)	2640 (740 - 2820)	13.08	11.83	97
	Non Duct	Duct	Duct		7000	11500	13900		32400 (11400 - 36000)	2640 (740 - 2820)	13.08	11.83	97
	Duct	Non Duct	Non Duct		6600	11500	13900		32000 (11400 - 35600)	2640 (740 - 2820)	13.08	11.83	97
	Duct	Non Duct	Duct		6600	11500	13900		32000 (11400 - 35600)	2640 (740 - 2820)	13.08	11.83	97
	Duct	Duct	Non Duct		6600	11500	13900		32000 (11400 - 35600)	2640 (740 - 2820)	13.08	11.83	97
	Duct	Duct	Duct		6600	11500	13900		32000 (11400 - 35600)	2640 (740 - 2820)	13.08	11.83	97
09+18+18	Non Duct	Non Duct	Non Duct		6600	12900	12900		32400 (11400 - 36000)	2640 (740 - 2820)	13.08	11.83	97
	Non Duct	Non Duct	Duct		6600	12900	12900		32400 (11400 - 36000)	2640 (740 - 2820)	13.08	11.83	97
	Non Duct	Duct	Duct		6600	12900	12900		32400 (11400 - 36000)	2640 (740 - 2820)	13.08	11.83	97
	Duct	Non Duct	Non Duct		6200	12900	12900		32000 (11400 - 35600)	2640 (740 - 2820)	13.08	11.83	97
	Duct	Non Duct	Duct		6200	12900	12900		32000 (11400 - 35600)	2640 (740 - 2820)	13.08	11.83	97
	Duct	Duct	Duct		6200	12900	12900		32000 (11400 - 35600)	2640 (740 - 2820)	13.08	11.83	97

MXZ-4B36NA HEATING

Indoor units combination	Indoor type				Heating capacity(BTU/h)					Power consumption (W)	Current(A)		P/F(%)
	A	B	C	D	Unit A	Unit B	Unit C	Unit D	Total		208V	230V	
12+12+12	Non Duct	Non Duct	Non Duct		10800	10800	10800		32400 (11400 - 36000)	2640 (740 - 2820)	13.08	11.83	97
	Non Duct	Non Duct	Duct		11000	11000	10400		32400 (11400 - 36000)	2640 (740 - 2820)	13.08	11.83	97
	Non Duct	Duct	Duct		11200	10600	10600		32400 (11400 - 36000)	2640 (740 - 2820)	13.08	11.83	97
	Duct	Duct	Duct		10800	10800	10800		32400 (11400 - 36000)	2640 (740 - 2820)	13.08	11.83	97
12+12+15	Non Duct	Non Duct	Non Duct		10000	10000	12400		32400 (11400 - 36000)	2640 (740 - 2820)	13.08	11.83	97
	Non Duct	Non Duct	Duct		10000	10000	12400		32400 (11400 - 36000)	2640 (740 - 2820)	13.08	11.83	97
	Non Duct	Duct	Non Duct		10100	9600	12700		32400 (11400 - 36000)	2640 (740 - 2820)	13.08	11.83	97
	Non Duct	Duct	Duct		10100	9600	12700		32400 (11400 - 36000)	2640 (740 - 2820)	13.08	11.83	97
	Duct	Duct	Non Duct		9700	9700	13000		32400 (11400 - 36000)	2640 (740 - 2820)	13.08	11.83	97
	Duct	Duct	Duct		9700	9700	13000		32400 (11400 - 36000)	2640 (740 - 2820)	13.08	11.83	97
12+12+18	Non Duct	Non Duct	Non Duct		9300	9300	13800		32400 (11400 - 36000)	2640 (740 - 2820)	13.08	11.83	97
	Non Duct	Non Duct	Duct		9300	9300	13800		32400 (11400 - 36000)	2640 (740 - 2820)	13.08	11.83	97
	Non Duct	Duct	Non Duct		9400	8900	14100		32400 (11400 - 36000)	2640 (740 - 2820)	13.08	11.83	97
	Non Duct	Duct	Duct		9400	8900	14100		32400 (11400 - 36000)	2640 (740 - 2820)	13.08	11.83	97
	Duct	Duct	Non Duct		9000	9000	14400		32400 (11400 - 36000)	2640 (740 - 2820)	13.08	11.83	97
	Duct	Duct	Duct		9000	9000	14400		32400 (11400 - 36000)	2640 (740 - 2820)	13.08	11.83	97
12+15+15	Non Duct	Non Duct	Non Duct		9000	11700	11700		32400 (11400 - 36000)	2640 (740 - 2820)	13.08	11.83	97
	Non Duct	Non Duct	Duct		9000	11700	11700		32400 (11400 - 36000)	2640 (740 - 2820)	13.08	11.83	97
	Non Duct	Duct	Duct		9000	11700	11700		32400 (11400 - 36000)	2640 (740 - 2820)	13.08	11.83	97
	Duct	Non Duct	Non Duct		9000	11700	11700		32400 (11400 - 36000)	2640 (740 - 2820)	13.08	11.83	97
	Duct	Non Duct	Duct		9000	11700	11700		32400 (11400 - 36000)	2640 (740 - 2820)	13.08	11.83	97
	Duct	Duct	Duct		9000	11700	11700		32400 (11400 - 36000)	2640 (740 - 2820)	13.08	11.83	97
06+06+06+06	Non Duct	Non Duct	Non Duct	Non Duct	7800	7800	7800	7800	31200 (11400 - 43000)	2380 (740 - 3880)	11.56	10.45	99
06+06+06+09	Non Duct	Non Duct	Non Duct	Non Duct	7800	7800	7800	10900	34300 (11400 - 43000)	2680 (740 - 3880)	13.01	11.77	99
	Non Duct	Non Duct	Non Duct	Duct	7800	7800	7800	10900	34300 (11400 - 42600)	3040 (740 - 3900)	14.76	13.35	99
06+06+06+12	Non Duct	Non Duct	Non Duct	Non Duct	7400	7400	7400	13800	36000 (11400 - 43000)	3020 (740 - 3880)	14.67	13.26	99
	Non Duct	Non Duct	Non Duct	Duct	7600	7600	7600	13200	36000 (11400 - 43000)	3040 (740 - 3900)	14.76	13.35	99
06+06+06+15	Non Duct	Non Duct	Non Duct	Non Duct	6800	6800	6800	15600	36000 (11400 - 43000)	3020 (740 - 3880)	14.67	13.26	99
	Non Duct	Non Duct	Non Duct	Duct	6800	6800	6800	15600	36000 (11400 - 43000)	3040 (740 - 3900)	14.76	13.35	99
06+06+09+09	Non Duct	Non Duct	Non Duct	Non Duct	7500	7500	10500	10500	36000 (11400 - 43000)	3020 (740 - 3880)	14.67	13.26	99
	Non Duct	Non Duct	Non Duct	Duct	7500	7500	10500	10100	35600 (11400 - 42600)	3040 (740 - 3900)	14.76	13.35	99
	Non Duct	Non Duct	Duct	Duct	7500	7500	10100	10100	35200 (11400 - 42200)	3060 (740 - 3910)	14.86	13.44	99
06+06+09+12	Non Duct	Non Duct	Non Duct	Non Duct	6900	6900	9600	12600	36000 (11400 - 43000)	3020 (740 - 3880)	14.67	13.26	99
	Non Duct	Non Duct	Non Duct	Duct	7000	7000	9800	12200	36000 (11400 - 43000)	3040 (740 - 3900)	14.76	13.35	99
	Non Duct	Non Duct	Duct	Non Duct	6900	6900	9200	12600	35600 (11400 - 42600)	3040 (740 - 3900)	14.76	13.35	99
	Non Duct	Non Duct	Duct	Duct	7000	7000	9400	12200	35600 (11400 - 42600)	3060 (740 - 3910)	14.86	13.44	99
06+06+09+15	Non Duct	Non Duct	Non Duct	Non Duct	6300	6300	8800	14600	36000 (11400 - 43000)	3020 (740 - 3880)	14.67	13.26	99
	Non Duct	Non Duct	Non Duct	Duct	6300	6300	8800	14600	36000 (11400 - 43000)	3040 (740 - 3900)	14.76	13.35	99
	Non Duct	Non Duct	Duct	Non Duct	6300	6300	8400	14600	35600 (11400 - 42600)	3040 (740 - 3900)	14.76	13.35	99
	Non Duct	Non Duct	Duct	Duct	6300	6300	8400	14600	35600 (11400 - 42600)	3060 (740 - 3910)	14.86	13.44	99
06+06+12+12	Non Duct	Non Duct	Non Duct	Non Duct	6300	6300	11700	11700	36000 (11400 - 43000)	3020 (740 - 3880)	14.67	13.26	99
	Non Duct	Non Duct	Non Duct	Duct	6400	6400	11900	11300	36000 (11400 - 43000)	3040 (740 - 3900)	14.76	13.35	99
	Non Duct	Non Duct	Duct	Duct	6600	6600	11400	11400	36000 (11400 - 43000)	3060 (740 - 3910)	14.86	13.44	99
06+06+12+15	Non Duct	Non Duct	Non Duct	Non Duct	5900	5900	10700	13500	36000 (11400 - 43000)	3020 (740 - 3880)	14.67	13.26	99
	Non Duct	Non Duct	Non Duct	Duct	5900	5900	10700	13500	36000 (11400 - 43000)	3040 (740 - 3900)	14.76	13.35	99
	Non Duct	Non Duct	Duct	Non Duct	6000	6000	10300	13700	36000 (11400 - 43000)	3040 (740 - 3900)	14.76	13.35	99
	Non Duct	Non Duct	Duct	Duct	6000	6000	10300	13700	36000 (11400 - 41200)	3060 (740 - 3910)	14.86	13.44	99
06+06+15+15	Non Duct	Non Duct	Non Duct	Non Duct	5400	5400	12600	12600	36000 (11400 - 43000)	3020 (740 - 3880)	14.67	13.26	99
	Non Duct	Non Duct	Non Duct	Duct	5400	5400	12600	12600	36000 (11400 - 43000)	3040 (740 - 3900)	14.76	13.35	99
	Non Duct	Non Duct	Duct	Duct	5400	5400	12600	12600	36000 (11400 - 43000)	3060 (740 - 3910)	14.86	13.44	99
06+09+09+09	Non Duct	Non Duct	Non Duct	Non Duct	6900	9700	9700	9700	36000 (11400 - 43000)	3020 (740 - 3880)	14.67	13.26	99
	Non Duct	Non Duct	Non Duct	Duct	6900	9700	9700	9300	35600 (11400 - 42600)	3040 (740 - 3900)	14.76	13.35	99
	Non Duct	Non Duct	Duct	Duct	6900	9700	9300	9300	35200 (11400 - 42200)	3060 (740 - 3910)	14.86	13.44	99
	Non Duct	Duct	Duct	Duct	6900	9300	9300	9300	34800 (11400 - 41800)	3080 (740 - 3930)	14.96	13.53	99

MXZ-4B36NA HEATING

Indoor units combination	Indoor type				Heating capacity(BTU/h)					Power consumption (W)	Current(A)		P/F(%)
	A	B	C	D	Unit A	Unit B	Unit C	Unit D	Total		208V	230V	
06+09+09+12	Non Duct	Non Duct	Non Duct	Non Duct	6400	8900	8900	11800	36000 (11400 - 43000)	3020 (740 - 3880)	14.67	13.26	99
	Non Duct	Non Duct	Non Duct	Duct	6400	8900	8900	11800	36000 (11400 - 43000)	3040 (740 - 3900)	14.76	13.35	99
	Non Duct	Non Duct	Duct	Non Duct	6400	8900	8500	11800	35600 (11400 - 42600)	3040 (740 - 3900)	14.76	13.35	99
	Non Duct	Non Duct	Duct	Duct	6400	8900	8500	11800	35600 (11400 - 42600)	3060 (740 - 3910)	14.86	13.44	99
	Non Duct	Duct	Duct	Non Duct	6400	8500	8500	11800	35200 (11400 - 42200)	3060 (740 - 3910)	14.86	13.44	99
	Non Duct	Duct	Duct	Duct	6400	8500	8500	11800	35200 (11400 - 42200)	3080 (740 - 3930)	14.96	13.53	99
06+09+09+15	Non Duct	Non Duct	Non Duct	Non Duct	5900	8200	8200	13700	36000 (11400 - 43000)	3020 (740 - 3880)	14.67	13.26	99
	Non Duct	Non Duct	Non Duct	Duct	5900	8200	8200	13700	36000 (11400 - 43000)	3040 (740 - 3900)	14.76	13.35	99
	Non Duct	Non Duct	Duct	Non Duct	5900	8200	7800	13700	35600 (11400 - 42600)	3040 (740 - 3900)	14.76	13.35	99
	Non Duct	Non Duct	Duct	Duct	5900	8200	7800	13700	35600 (11400 - 42600)	3060 (740 - 3910)	14.86	13.44	99
	Non Duct	Duct	Duct	Non Duct	5900	7800	7800	13700	35200 (11400 - 42200)	3060 (740 - 3910)	14.86	13.44	99
	Non Duct	Duct	Duct	Duct	5900	7800	7800	13700	35200 (11400 - 42200)	3080 (740 - 3930)	14.96	13.53	99
06+09+12+12	Non Duct	Non Duct	Non Duct	Non Duct	5900	8300	10900	10900	36000 (11400 - 43000)	3020 (740 - 3880)	14.67	13.26	99
	Non Duct	Non Duct	Non Duct	Duct	5900	8300	10900	10900	36000 (11400 - 43000)	3040 (740 - 3900)	14.76	13.35	99
	Non Duct	Non Duct	Duct	Duct	5900	8300	10900	10900	36000 (11400 - 43000)	3060 (740 - 3910)	14.86	13.44	99
	Non Duct	Duct	Non Duct	Non Duct	5900	7900	10900	10900	35600 (11400 - 42600)	3040 (740 - 3900)	14.76	13.35	99
	Non Duct	Duct	Non Duct	Duct	5900	7900	10900	10900	35600 (11400 - 42600)	3060 (740 - 3910)	14.86	13.44	99
	Non Duct	Duct	Duct	Duct	5900	7900	10900	10900	35600 (11400 - 42600)	3080 (740 - 3930)	14.96	13.53	99
06+09+12+15	Non Duct	Non Duct	Non Duct	Non Duct	5500	7700	10100	12700	36000 (11400 - 43000)	3020 (740 - 3880)	14.67	13.26	99
	Non Duct	Non Duct	Non Duct	Duct	5500	7700	10100	12700	36000 (11400 - 43000)	3040 (740 - 3900)	14.76	13.35	99
	Non Duct	Non Duct	Duct	Non Duct	5500	7700	10100	12700	36000 (11400 - 43000)	3040 (740 - 3900)	14.76	13.35	99
	Non Duct	Non Duct	Duct	Duct	5500	7700	10100	12700	36000 (11400 - 43000)	3060 (740 - 3910)	14.86	13.44	99
	Non Duct	Duct	Non Duct	Non Duct	5500	7300	10100	12700	35600 (11400 - 42600)	3040 (740 - 3900)	14.76	13.35	99
	Non Duct	Duct	Non Duct	Duct	5500	7300	10100	12700	35600 (11400 - 42600)	3060 (740 - 3910)	14.86	13.44	99
	Non Duct	Duct	Duct	Non Duct	5500	7300	10100	12700	35600 (11400 - 42600)	3060 (740 - 3910)	14.86	13.44	99
	Non Duct	Duct	Duct	Duct	5500	7300	10100	12700	35600 (11400 - 42600)	3080 (740 - 3930)	14.96	13.53	99
09+09+09+09	Non Duct	Non Duct	Non Duct	Non Duct	9000	9000	9000	9000	36000 (11400 - 43000)	3020 (740 - 3880)	14.67	13.26	99
	Non Duct	Non Duct	Non Duct	Duct	9000	9000	9000	8600	35600 (11400 - 42600)	3040 (740 - 3900)	14.76	13.35	99
	Non Duct	Non Duct	Duct	Duct	9000	9000	8600	8600	35200 (11400 - 42200)	3060 (740 - 3910)	14.86	13.44	99
	Non Duct	Duct	Duct	Duct	9000	8600	8600	8600	34800 (11400 - 41800)	3080 (740 - 3930)	14.96	13.53	99
	Duct	Duct	Duct	Duct	8600	8600	8600	8600	34400 (11400 - 41400)	3100 (740 - 3940)	15.05	13.61	99
09+09+09+12	Non Duct	Non Duct	Non Duct	Non Duct	8300	8300	8300	11100	36000 (11400 - 43000)	3020 (740 - 3880)	14.67	13.26	99
	Non Duct	Non Duct	Non Duct	Duct	8500	8500	8500	10500	36000 (11400 - 43000)	3040 (740 - 3900)	14.76	13.35	99
	Non Duct	Non Duct	Duct	Non Duct	8300	8300	7900	11100	35600 (11400 - 42600)	3040 (740 - 3900)	14.76	13.35	99
	Non Duct	Non Duct	Duct	Duct	8500	8500	8100	10500	35600 (11400 - 42600)	3060 (740 - 3910)	14.86	13.44	99
	Non Duct	Duct	Duct	Non Duct	8300	7900	7900	11100	35200 (11400 - 42200)	3060 (740 - 3910)	14.86	13.44	99
	Non Duct	Duct	Duct	Duct	8500	8100	8100	10500	35200 (11400 - 42200)	3080 (740 - 3930)	14.96	13.53	99
	Duct	Duct	Duct	Non Duct	7900	7900	7900	11100	34800 (11400 - 41800)	3080 (740 - 3930)	14.96	13.53	99
	Duct	Duct	Duct	Duct	8100	8100	8100	10500	34800 (11400 - 41800)	3100 (740 - 3940)	15.05	13.61	99
09+09+09+15	Non Duct	Non Duct	Non Duct	Non Duct	7700	7700	7700	12900	36000 (11400 - 43000)	3020 (740 - 3880)	14.67	13.26	99
	Non Duct	Non Duct	Non Duct	Duct	7700	7700	7700	12900	36000 (11400 - 43000)	3040 (740 - 3900)	14.76	13.35	99
	Non Duct	Non Duct	Duct	Non Duct	7700	7700	7300	12900	35600 (11400 - 42600)	3040 (740 - 3900)	14.76	13.35	99
	Non Duct	Non Duct	Duct	Duct	7700	7700	7300	12900	35600 (11400 - 42600)	3060 (740 - 3910)	14.86	13.44	99
	Non Duct	Duct	Duct	Non Duct	7700	7300	7300	12900	35200 (11400 - 42200)	3060 (740 - 3910)	14.86	13.44	99
	Non Duct	Duct	Duct	Duct	7700	7300	7300	12900	35200 (11400 - 42200)	3080 (740 - 3930)	14.96	13.53	99
	Duct	Duct	Duct	Non Duct	7300	7300	7300	12900	34800 (11400 - 41800)	3080 (740 - 3930)	14.96	13.53	99
	Duct	Duct	Duct	Duct	7300	7300	7300	12900	34800 (11400 - 41800)	3100 (740 - 3940)	15.05	13.61	99
09+09+12+12	Non Duct	Non Duct	Non Duct	Non Duct	7800	7800	10200	10200	36000 (11400 - 43000)	3020 (740 - 3880)	14.67	13.26	99
	Non Duct	Non Duct	Non Duct	Duct	7900	7900	10400	9800	36000 (11400 - 43000)	3040 (740 - 3900)	14.76	13.35	99
	Non Duct	Non Duct	Duct	Duct	8000	8000	10000	10000	36000 (11400 - 43000)	3060 (740 - 3910)	14.86	13.44	99
	Non Duct	Duct	Non Duct	Non Duct	7800	7400	10200	10200	35600 (11400 - 42600)	3040 (740 - 3900)	14.76	13.35	99
	Non Duct	Duct	Non Duct	Duct	7900	7500	10400	9800	35600 (11400 - 42600)	3060 (740 - 3910)	14.86	13.44	99
	Non Duct	Duct	Duct	Duct	8000	7600	10000	10000	35600 (11400 - 42600)	3080 (740 - 3930)	14.96	13.53	99
	Duct	Duct	Non Duct	Non Duct	7400	7400	10200	10200	35200 (11400 - 42200)	3060 (740 - 3910)	14.86	13.44	99
	Duct	Duct	Non Duct	Duct	7500	7500	10400	9800	35200 (11400 - 42200)	3080 (740 - 3930)	14.96	13.53	99
	Duct	Duct	Duct	Duct	7600	7600	10000	10000	35200 (11400 - 42200)	3100 (740 - 3940)	15.05	13.61	99

MXZ-4B36NA-1 COOLING

Indoor units combination	Indoor type				Cooling capacity(BTU/h)					Power consumption (W)	Current(A)		P/F(%)
	A	B	C	D	Unit A	Unit B	Unit C	Unit D	Total		208V	230V	
06	Non Duct				6500				6500 (5200 - 6500)	580 (460 - 580)	2.94	2.65	95
09	Non Duct				9000				9000 (7200 - 9000)	800 (580 - 800)	4.05	3.66	95
	Duct				9000				9000 (7200 - 9000)	820 (600 - 820)	4.15	3.75	95
12	Non Duct				12000				12000 (7200 - 12000)	1000 (580 - 1000)	5.06	4.58	95
	Duct				12000				12000 (7200 - 12000)	1020 (600 - 1020)	5.16	4.67	95
15	Non Duct				14000				14000 (7200 - 15000)	1320 (580 - 1320)	6.68	6.04	95
	Duct				15000				15000 (7200 - 15000)	1340 (600 - 1340)	6.78	6.13	95
18	Non Duct				17200				17200 (7200 - 17200)	1570 (580 - 1570)	7.95	7.19	95
	Duct				17200				17200 (7200 - 17200)	1590 (600 - 1590)	8.05	7.28	95
24	Non Duct				22000				22000 (7200 - 22000)	2200 (580 - 2200)	11.13	10.07	95
06+06	Non Duct	Non Duct			6500	6500			13000 (12000 - 13000)	960 (920 - 960)	4.76	4.30	97
06+09	Non Duct	Non Duct			6500	9000			15500 (12000 - 15500)	1200 (920 - 1200)	5.95	5.38	97
	Non Duct	Duct			6500	9000			15500 (12000 - 15500)	1260 (940 - 1260)	6.25	5.65	97
06+12	Non Duct	Non Duct			6500	12000			18500 (12000 - 18500)	1540 (920 - 1540)	7.63	6.90	97
	Non Duct	Duct			6500	12000			18500 (12000 - 18500)	1600 (940 - 1600)	7.93	7.17	97
06+15	Non Duct	Non Duct			6500	14000			20500 (12000 - 20500)	1820 (920 - 1820)	9.02	8.16	97
	Non Duct	Duct			6500	15000			21500 (12000 - 21500)	1940 (940 - 1940)	9.62	8.70	97
06+18	Non Duct	Non Duct			6500	17200			23700 (12000 - 23700)	2440 (920 - 2440)	12.09	10.94	97
	Non Duct	Duct			6500	17200			23700 (12000 - 23700)	2460 (940 - 2460)	12.19	11.03	97
06+24	Non Duct	Non Duct			5900	20100			26000 (12000 - 26000)	2800 (920 - 2800)	13.88	12.55	97
09+09	Non Duct	Non Duct			9000	9000			18000 (12000 - 18000)	1480 (920 - 1480)	7.34	6.63	97
	Non Duct	Duct			9000	9000			18000 (12000 - 18000)	1660 (940 - 1660)	8.23	7.44	97
	Duct	Duct			9000	9000			18000 (12000 - 18000)	1840 (960 - 1840)	9.12	8.25	97
09+12	Non Duct	Non Duct			9000	12000			21000 (12000 - 21000)	1940 (920 - 1940)	9.62	8.70	97
	Non Duct	Duct			9000	12000			21000 (12000 - 21000)	1990 (940 - 1990)	9.86	8.92	97
	Duct	Non Duct			9000	12000			21000 (12000 - 20600)	1990 (940 - 1990)	9.86	8.92	97
	Duct	Duct			9000	12000			21000 (12000 - 20600)	2040 (960 - 2040)	10.11	9.14	97
09+15	Non Duct	Non Duct			9000	14000			23000 (12000 - 23000)	2500 (920 - 2500)	12.39	11.21	97
	Non Duct	Duct			9000	15000			24000 (12000 - 24000)	2520 (940 - 2520)	12.49	11.30	97
	Duct	Non Duct			9000	14000			23000 (12000 - 23000)	2520 (940 - 2520)	12.49	11.30	97
	Duct	Duct			9000	15000			24000 (12000 - 24000)	2540 (960 - 2540)	12.59	11.39	97
09+18	Non Duct	Non Duct			8900	17100			26000 (12000 - 26000)	2800 (920 - 2800)	13.88	12.55	97
	Non Duct	Duct			8900	17100			26000 (12000 - 26000)	2820 (940 - 2820)	13.98	12.64	97
	Duct	Non Duct			8900	17100			26000 (12000 - 26000)	2820 (940 - 2820)	13.98	12.64	97
	Duct	Duct			8900	17100			26000 (12000 - 26000)	2840 (960 - 2840)	14.08	12.73	97
09+24	Non Duct	Non Duct			7600	20400			28000 (12000 - 28000)	3200 (920 - 3200)	15.86	14.34	97
	Duct	Non Duct			7600	20400			28000 (12000 - 28000)	3220 (940 - 3220)	15.96	14.43	97
12+12	Non Duct	Non Duct			12000	12000			24000 (12000 - 24000)	2500 (920 - 2500)	12.39	11.21	97
	Non Duct	Duct			12000	12000			24000 (12000 - 24000)	2520 (940 - 2520)	12.49	11.30	97
	Duct	Duct			12000	12000			24000 (12000 - 24000)	2540 (960 - 2540)	12.59	11.39	97
12+15	Non Duct	Non Duct			12000	14000			26000 (12000 - 26000)	2800 (920 - 2800)	13.88	12.55	97
	Non Duct	Duct			11500	14500			26000 (12000 - 26000)	2820 (940 - 2820)	13.98	12.64	97
	Duct	Non Duct			12000	14000			26000 (12000 - 26000)	2820 (940 - 2820)	13.98	12.64	97
	Duct	Duct			11500	14500			26000 (12000 - 26000)	2840 (960 - 2840)	14.08	12.73	97
12+18	Non Duct	Non Duct			10400	15600			26000 (12000 - 26000)	2800 (920 - 2800)	13.88	12.55	97
	Non Duct	Duct			10400	15600			26000 (12000 - 26000)	2820 (940 - 2820)	13.98	12.64	97
	Duct	Non Duct			10400	15600			26000 (12000 - 26000)	2820 (940 - 2820)	13.98	12.64	97
	Duct	Duct			10400	15600			26000 (12000 - 26000)	2840 (960 - 2840)	14.08	12.73	97
12+24	Non Duct	Non Duct			9900	18100			28000 (12000 - 28000)	3200 (920 - 3200)	15.86	14.34	97
	Duct	Non Duct			9900	18100			28000 (12000 - 28000)	3220 (940 - 3220)	15.96	14.43	97
15+15	Non Duct	Non Duct			13000	13000			26000 (12000 - 26000)	2800 (920 - 2800)	13.88	12.55	97
	Non Duct	Duct			13000	13000			26000 (12000 - 26000)	2820 (940 - 2820)	13.98	12.64	97
	Duct	Duct			13000	13000			26000 (12000 - 26000)	2840 (960 - 2840)	14.08	12.73	97
15+18	Non Duct	Non Duct			11700	14300			26000 (12000 - 26000)	2800 (920 - 2800)	13.88	12.55	97
	Non Duct	Duct			11800	14200			26000 (12000 - 26000)	2820 (940 - 2820)	13.98	12.64	97
	Duct	Non Duct			11700	14300			26000 (12000 - 26000)	2820 (940 - 2820)	13.98	12.64	97
	Duct	Duct			11800	14200			26000 (12000 - 26000)	2840 (960 - 2840)	14.08	12.73	97
18+18	Non Duct	Non Duct			13000	13000			26000 (12000 - 26000)	2800 (920 - 2800)	13.88	12.55	97
	Non Duct	Duct			13000	13000			26000 (12000 - 26000)	2820 (940 - 2820)	13.98	12.64	97
	Duct	Duct			13000	13000			26000 (12000 - 26000)	2840 (960 - 2840)	14.08	12.73	97

MXZ-4B36NA-1 COOLING

Indoor units combination	Indoor type				Cooling capacity(BTU/h)					Power consumption (W)	Current(A)		P/F(%)
	A	B	C	D	Unit A	Unit B	Unit C	Unit D	Total		208V	230V	
06+06+06	Non Duct	Non Duct	Non Duct		6500	6500	6500		19500 (12600 - 19500)	1600 (1000 - 1600)	7.93	7.17	97
06+06+09	Non Duct	Non Duct	Non Duct		6500	6500	9000		22000 (12600 - 22000)	1760 (1000 - 1760)	8.72	7.89	97
	Non Duct	Non Duct	Duct		6500	6500	9000		22000 (12600 - 22000)	1940 (1020 - 1940)	9.62	8.70	97
06+06+12	Non Duct	Non Duct	Non Duct		6500	6500	12000		25000 (12600 - 25000)	2230 (1000 - 2230)	11.05	10.00	97
	Non Duct	Non Duct	Duct		6500	6500	12000		25000 (12600 - 25000)	2330 (1020 - 2330)	11.55	10.44	97
06+06+15	Non Duct	Non Duct	Non Duct		6500	6500	14000		27000 (12600 - 27000)	2530 (1000 - 2530)	12.54	11.34	97
	Non Duct	Non Duct	Duct		6500	6500	15000		28000 (12600 - 28000)	2580 (1020 - 2580)	12.79	11.56	97
06+06+18	Non Duct	Non Duct	Non Duct		6500	6500	17200		30200 (12600 - 30200)	3100 (1000 - 3100)	15.36	13.90	97
	Non Duct	Non Duct	Duct		6500	6500	17200		30200 (12600 - 30200)	3120 (1020 - 3120)	15.46	13.98	97
06+06+24	Non Duct	Non Duct	Non Duct		6000	6000	20100		32100 (12600 - 32100)	3500 (1000 - 3500)	17.35	15.69	97
06+09+09	Non Duct	Non Duct	Non Duct		6500	9000	9000		24500 (12600 - 24500)	2230 (1000 - 2230)	11.05	10.00	97
	Non Duct	Non Duct	Duct		6500	9000	9000		24500 (12600 - 24500)	2260 (1020 - 2260)	11.20	10.13	97
	Non Duct	Duct	Duct		6500	9000	9000		24500 (12600 - 24500)	2290 (1040 - 2290)	11.35	10.26	97
06+09+12	Non Duct	Non Duct	Non Duct		6500	9000	12000		27500 (12600 - 27500)	2640 (1000 - 2640)	13.08	11.83	97
	Non Duct	Non Duct	Duct		6500	9000	12000		27500 (12600 - 27500)	2660 (1020 - 2660)	13.18	11.92	97
	Non Duct	Duct	Non Duct		6500	9000	12000		27500 (12600 - 27500)	2670 (1020 - 2670)	13.23	11.97	97
	Non Duct	Duct	Duct		6500	9000	12000		27500 (12600 - 27500)	2690 (1040 - 2690)	13.33	12.06	97
06+09+15	Non Duct	Non Duct	Non Duct		6500	9000	14000		29500 (12600 - 29500)	2990 (1000 - 2990)	14.82	13.40	97
	Non Duct	Non Duct	Duct		6500	9000	15000		30500 (12600 - 30500)	3010 (1020 - 3010)	14.92	13.49	97
	Non Duct	Duct	Non Duct		6500	9000	14000		29500 (12600 - 29500)	3020 (1020 - 3020)	14.97	13.54	97
	Non Duct	Duct	Duct		6500	9000	15000		30500 (12600 - 30500)	3040 (1040 - 3040)	15.07	13.63	97
06+09+18	Non Duct	Non Duct	Non Duct		6400	8800	16900		32100 (12600 - 32100)	3500 (1000 - 3500)	17.35	15.69	97
	Non Duct	Non Duct	Duct		6400	8800	16900		32100 (12600 - 32100)	3520 (1020 - 3520)	17.45	15.78	97
	Non Duct	Duct	Non Duct		6400	8400	16900		31700 (12600 - 31700)	3530 (1020 - 3530)	17.50	15.82	97
	Non Duct	Duct	Duct		6400	8400	16900		31700 (12600 - 31700)	3550 (1040 - 3550)	17.60	15.91	97
06+09+24	Non Duct	Non Duct	Non Duct		5600	7700	18800		32100 (12600 - 32100)	3500 (1000 - 3500)	17.35	15.69	97
	Non Duct	Duct	Non Duct		5600	7300	18800		31700 (12600 - 31700)	3530 (1020 - 3530)	17.50	15.82	97
06+12+12	Non Duct	Non Duct	Non Duct		6500	12000	12000		30500 (12600 - 30500)	3150 (1000 - 3150)	15.61	14.12	97
	Non Duct	Non Duct	Duct		6500	12000	12000		30500 (12600 - 30500)	3170 (1020 - 3170)	15.71	14.21	97
	Non Duct	Duct	Duct		6500	12000	12000		30500 (12600 - 30500)	3190 (1040 - 3190)	15.81	14.30	97
06+12+15	Non Duct	Non Duct	Non Duct		6400	11900	13800		32100 (12600 - 32100)	3500 (1000 - 3500)	17.35	15.69	97
	Non Duct	Non Duct	Duct		6200	11500	14400		32100 (12600 - 32100)	3520 (1020 - 3520)	17.45	15.78	97
	Non Duct	Duct	Non Duct		6400	11900	13800		32100 (12600 - 32100)	3520 (1020 - 3520)	17.45	15.78	97
	Non Duct	Duct	Duct		6200	11500	14400		32100 (12600 - 32100)	3540 (1040 - 3540)	17.55	15.87	97
06+12+18	Non Duct	Non Duct	Non Duct		5800	10800	15500		32100 (12600 - 32100)	3500 (1000 - 3500)	17.35	15.69	97
	Non Duct	Non Duct	Duct		5800	10800	15500		32100 (12600 - 32100)	3520 (1020 - 3520)	17.45	15.78	97
	Non Duct	Duct	Non Duct		5800	10800	15500		32100 (12600 - 32100)	3520 (1020 - 3520)	17.45	15.78	97
	Non Duct	Duct	Duct		5800	10800	15500		32100 (12600 - 32100)	3540 (1040 - 3540)	17.55	15.87	97
06+15+15	Non Duct	Non Duct	Non Duct		6100	13000	13000		32100 (12600 - 32100)	3500 (1000 - 3500)	17.35	15.69	97
	Non Duct	Non Duct	Duct		5900	12700	13500		32100 (12600 - 32100)	3520 (1020 - 3520)	17.45	15.78	97
	Non Duct	Duct	Duct		5700	13200	13200		32100 (12600 - 32100)	3540 (1040 - 3540)	17.55	15.87	97
06+15+18	Non Duct	Non Duct	Non Duct		5600	11900	14600		32100 (12600 - 32100)	3500 (1000 - 3500)	17.35	15.69	97
	Non Duct	Non Duct	Duct		5600	11900	14600		32100 (12600 - 32100)	3520 (1020 - 3520)	17.45	15.78	97
	Non Duct	Duct	Non Duct		5400	12400	14300		32100 (12600 - 32100)	3520 (1020 - 3520)	17.45	15.78	97
	Non Duct	Duct	Duct		5400	12400	14300		32100 (12600 - 32100)	3540 (1040 - 3540)	17.55	15.87	97
06+18+18	Non Duct	Non Duct	Non Duct		5100	13500	13500		32100 (12600 - 32100)	3500 (1000 - 3500)	17.35	15.69	97
	Non Duct	Non Duct	Duct		5100	13500	13500		32100 (12600 - 32100)	3520 (1020 - 3520)	17.45	15.78	97
	Non Duct	Duct	Duct		5100	13500	13500		32100 (12600 - 32100)	3540 (1040 - 3540)	17.55	15.87	97
09+09+09	Non Duct	Non Duct	Non Duct		9000	9000	9000		27000 (12600 - 27000)	2530 (1000 - 2530)	12.54	11.34	97
	Non Duct	Non Duct	Duct		9000	9000	8600		26600 (12600 - 26600)	2670 (1020 - 2670)	13.23	11.97	97
	Non Duct	Duct	Duct		9000	8600	8600		26200 (12600 - 26200)	2810 (1040 - 2810)	13.93	12.60	97
	Duct	Duct	Duct		8600	8600	8600		25800 (12600 - 25800)	2950 (1060 - 2950)	14.62	13.22	97
09+09+12	Non Duct	Non Duct	Non Duct		9000	9000	12000		30000 (12600 - 30000)	3270 (1000 - 3270)	16.21	14.66	97
	Non Duct	Non Duct	Duct		9000	9000	12000		30000 (12600 - 30000)	3290 (1020 - 3290)	16.31	14.75	97
	Non Duct	Duct	Non Duct		9000	8600	12000		29600 (12600 - 29600)	3300 (1020 - 3300)	16.36	14.79	97
	Non Duct	Duct	Duct		9000	8600	12000		29600 (12600 - 29600)	3320 (1040 - 3320)	16.46	14.88	97
	Duct	Duct	Non Duct		8600	8600	12000		29200 (12600 - 29200)	3330 (1040 - 3330)	16.50	14.93	97
	Duct	Duct	Duct		8600	8600	12000		29200 (12600 - 29200)	3350 (1060 - 3350)	16.60	15.02	97

MXZ-4B36NA-1 COOLING

Indoor units combination	Indoor type				Cooling capacity(BTU/h)					Power consumption (W)	Current(A)		P/F(%)
	A	B	C	D	Unit A	Unit B	Unit C	Unit D	Total		208V	230V	
09+09+15	Non Duct	Non Duct	Non Duct		9000	9000	14000		32000 (12600 - 32100)	3500 (1000 - 3500)	17.35	15.69	97
	Non Duct	Non Duct	Duct		8800	8800	14500		32100 (12600 - 32100)	3520 (1020 - 3520)	17.45	15.78	97
	Non Duct	Duct	Non Duct		9000	8700	14000		31700 (12600 - 31700)	3530 (1020 - 3530)	17.50	15.82	97
	Non Duct	Duct	Duct		8800	8400	14500		31700 (12600 - 31700)	3550 (1040 - 3550)	17.60	15.91	97
	Duct	Duct	Non Duct		8650	8650	14000		31300 (12600 - 31300)	3560 (1040 - 3560)	17.64	15.96	97
	Duct	Duct	Duct		8400	8400	14500		31300 (12600 - 31300)	3580 (1060 - 3580)	17.74	16.05	97
09+09+18	Non Duct	Non Duct	Non Duct		8200	8200	15700		32100 (12600 - 32100)	3500 (1000 - 3500)	17.35	15.69	97
	Non Duct	Non Duct	Duct		8100	8100	15900		32100 (12600 - 32100)	3520 (1020 - 3520)	17.45	15.78	97
	Non Duct	Duct	Non Duct		8200	7800	15700		31700 (12600 - 31700)	3530 (1020 - 3530)	17.50	15.82	97
	Non Duct	Duct	Duct		8100	7700	15900		31700 (12600 - 31700)	3550 (1040 - 3550)	17.60	15.91	97
	Duct	Duct	Non Duct		7800	7800	15700		31300 (12600 - 31300)	3560 (1040 - 3560)	17.64	15.96	97
	Duct	Duct	Duct		7700	7700	15900		31300 (12600 - 31300)	3580 (1060 - 3580)	17.74	16.05	97
09+09+24	Non Duct	Non Duct	Non Duct		6900	6900	18300		32100 (12600 - 32100)	3500 (1000 - 3500)	17.35	15.69	97
	Non Duct	Duct	Non Duct		6900	6500	18300		31700 (12600 - 31700)	3530 (1020 - 3530)	17.50	15.82	97
	Duct	Duct	Non Duct		6500	6500	18300		31300 (12600 - 31300)	3560 (1040 - 3560)	17.64	15.96	97
09+12+12	Non Duct	Non Duct	Non Duct		8700	11700	11700		32100 (12600 - 32100)	3500 (1000 - 3500)	17.35	15.69	97
	Non Duct	Non Duct	Duct		8700	11700	11700		32100 (12600 - 32100)	3520 (1020 - 3520)	17.45	15.78	97
	Non Duct	Duct	Duct		8700	11700	11700		32100 (12600 - 32100)	3540 (1040 - 3540)	17.55	15.87	97
	Duct	Non Duct	Non Duct		8300	11700	11700		31700 (12600 - 31700)	3530 (1020 - 3530)	17.50	15.82	97
	Duct	Non Duct	Duct		8300	11700	11700		31700 (12600 - 31700)	3550 (1040 - 3550)	17.60	15.91	97
	Duct	Duct	Duct		8300	11700	11700		31700 (12600 - 31700)	3570 (1060 - 3570)	17.69	16.00	97
09+12+15	Non Duct	Non Duct	Non Duct		8300	11000	12800		32100 (12600 - 32100)	3500 (1000 - 3500)	17.35	15.69	97
	Non Duct	Non Duct	Duct		8000	10700	13400		32100 (12600 - 32100)	3520 (1020 - 3520)	17.45	15.78	97
	Non Duct	Duct	Non Duct		8300	11000	12800		32100 (12600 - 32100)	3520 (1020 - 3520)	17.45	15.78	97
	Non Duct	Duct	Duct		8000	10700	13400		32100 (12600 - 32100)	3540 (1040 - 3540)	17.55	15.87	97
	Duct	Non Duct	Non Duct		7900	11000	12800		31700 (12600 - 31700)	3530 (1020 - 3530)	17.50	15.82	97
	Duct	Non Duct	Duct		7600	10700	13400		31700 (12600 - 31700)	3550 (1040 - 3550)	17.60	15.91	97
	Duct	Duct	Non Duct		7900	11000	12800		31700 (12600 - 31700)	3550 (1040 - 3550)	17.60	15.91	97
	Duct	Duct	Duct		7600	10700	13400		31700 (12600 - 31700)	3570 (1060 - 3570)	17.69	16.00	97
09+12+18	Non Duct	Non Duct	Non Duct		7500	10000	14600		32100 (12600 - 32100)	3500 (1000 - 3500)	17.35	15.69	97
	Non Duct	Non Duct	Duct		7500	10000	14600		32100 (12600 - 32100)	3520 (1020 - 3520)	17.45	15.78	97
	Non Duct	Duct	Non Duct		7500	10000	14600		32100 (12600 - 32100)	3520 (1020 - 3520)	17.45	15.78	97
	Non Duct	Duct	Duct		7500	10000	14600		32100 (12600 - 32100)	3540 (1040 - 3540)	17.55	15.87	97
	Duct	Non Duct	Non Duct		7100	10000	14600		31700 (12600 - 31700)	3530 (1020 - 3530)	17.50	15.82	97
	Duct	Non Duct	Duct		7100	10000	14600		31700 (12600 - 31700)	3550 (1040 - 3550)	17.60	15.91	97
	Duct	Duct	Non Duct		7100	10000	14600		31700 (12600 - 31700)	3530 (1040 - 3530)	17.50	15.82	97
	Duct	Duct	Duct		7100	10000	14600		31700 (12600 - 31700)	3570 (1060 - 3570)	17.69	16.00	97
09+15+15	Non Duct	Non Duct	Non Duct		7700	12200	12200		32100 (12600 - 32100)	3500 (1000 - 3500)	17.35	15.69	97
	Non Duct	Non Duct	Duct		7600	11800	12700		32100 (12600 - 32100)	3520 (1020 - 3520)	17.45	15.78	97
	Non Duct	Duct	Duct		7500	12300	12300		32100 (12600 - 32100)	3540 (1040 - 3540)	17.55	15.87	97
	Duct	Non Duct	Non Duct		7700	12000	12000		31700 (12600 - 31700)	3530 (1020 - 3530)	17.50	15.82	97
	Duct	Non Duct	Duct		7400	11700	12600		31700 (12600 - 31700)	3550 (1040 - 3550)	17.60	15.91	97
	Duct	Duct	Duct		7100	12300	12300		31700 (12600 - 31700)	3570 (1060 - 3570)	17.69	16.00	97
09+15+18	Non Duct	Non Duct	Non Duct		7200	11200	13700		32100 (12600 - 32100)	3500 (1000 - 3500)	17.35	15.69	97
	Non Duct	Non Duct	Duct		7200	11200	13700		32100 (12600 - 32100)	3520 (1020 - 3520)	17.45	15.78	97
	Non Duct	Duct	Non Duct		7000	11600	13500		32100 (12600 - 32100)	3520 (1020 - 3520)	17.45	15.78	97
	Non Duct	Duct	Duct		7000	11600	13500		32100 (12600 - 32100)	3540 (1040 - 3520)	17.55	15.87	97
	Duct	Non Duct	Non Duct		7100	11000	13600		31700 (12600 - 31700)	3530 (1020 - 3530)	17.50	15.82	97
	Duct	Non Duct	Duct		7100	11000	13600		31700 (12600 - 31700)	3550 (1040 - 3550)	17.60	15.91	97
	Duct	Duct	Non Duct		6600	11600	13500		31700 (12600 - 31700)	3550 (1040 - 3550)	17.60	15.91	97
	Duct	Duct	Duct		6600	11600	13500		31700 (12600 - 31700)	3570 (1060 - 3570)	17.69	16.00	97
09+18+18	Non Duct	Non Duct	Non Duct		6500	12800	12800		32100 (12600 - 32100)	3500 (1000 - 3500)	17.35	15.69	97
	Non Duct	Non Duct	Duct		6500	12800	12800		32100 (12600 - 32100)	3520 (1020 - 3520)	17.45	15.78	97
	Non Duct	Duct	Duct		6500	12800	12800		32100 (12600 - 32100)	3540 (1040 - 3540)	17.55	15.87	97
	Duct	Non Duct	Non Duct		6100	12800	12800		31700 (12600 - 31700)	3530 (1020 - 3530)	17.50	15.82	97
	Duct	Non Duct	Duct		6100	12800	12800		31700 (12600 - 31700)	3550 (1040 - 3550)	17.60	15.91	97
	Duct	Duct	Duct		6100	12800	12800		31700 (12600 - 31700)	3570 (1060 - 3570)	17.69	16.00	97

MXZ-4B36NA-1 COOLING

Indoor units combination	Indoor type				Cooling capacity(BTU/h)					Power consumption (W)	Current(A)		P/F(%)
	A	B	C	D	Unit A	Unit B	Unit C	Unit D	Total		208V	230V	
12+12+12	Non Duct	Non Duct	Non Duct		10700	10700	10700		32100 (12600 - 32100)	3500 (1000 - 3500)	17.35	15.69	97
	Non Duct	Non Duct	Duct		10700	10700	10700		32100 (12600 - 32100)	3520 (1020 - 3520)	17.45	15.78	97
	Non Duct	Duct	Duct		10700	10700	10700		32100 (12600 - 32100)	3540 (1040 - 3540)	17.55	15.87	97
	Duct	Duct	Duct		10700	10700	10700		32100 (12600 - 32100)	3560 (1060 - 3560)	17.64	15.96	97
12+12+15	Non Duct	Non Duct	Non Duct		10100	10100	11900		32100 (12600 - 32100)	3500 (1000 - 3500)	17.35	15.69	97
	Non Duct	Non Duct	Duct		9900	9900	12300		32100 (12600 - 32100)	3520 (1020 - 3520)	17.45	15.78	97
	Non Duct	Duct	Non Duct		10100	10100	11900		32100 (12600 - 32100)	3520 (1020 - 3520)	17.45	15.78	97
	Non Duct	Duct	Duct		9900	9900	12300		32100 (12600 - 32100)	3540 (1040 - 3540)	17.55	15.87	97
	Duct	Duct	Non Duct		10100	10100	11900		32100 (12600 - 32100)	3540 (1040 - 3540)	17.55	15.87	97
	Duct	Duct	Duct		9900	9900	12300		32100 (12600 - 32100)	3560 (1060 - 3560)	17.64	15.96	97
12+12+18	Non Duct	Non Duct	Non Duct		9300	9300	13500		32100 (12600 - 32100)	3500 (1000 - 3500)	17.35	15.69	97
	Non Duct	Non Duct	Duct		9300	9300	13500		32100 (12600 - 32100)	3520 (1020 - 3520)	17.45	15.78	97
	Non Duct	Duct	Non Duct		9300	9300	13500		32100 (12600 - 32100)	3520 (1020 - 3520)	17.45	15.78	97
	Non Duct	Duct	Duct		9300	9300	13500		32100 (12600 - 32100)	3540 (1040 - 3540)	17.55	15.87	97
	Duct	Duct	Non Duct		9300	9300	13500		32100 (12600 - 32100)	3540 (1040 - 3540)	17.55	15.87	97
	Duct	Duct	Duct		9300	9300	13500		32100 (12600 - 32100)	3560 (1060 - 3560)	17.64	15.96	97
12+15+15	Non Duct	Non Duct	Non Duct		9700	11200	11200		32100 (12600 - 32100)	3500 (1000 - 3500)	17.35	15.69	97
	Non Duct	Non Duct	Duct		9400	11000	11700		32100 (12600 - 32100)	3520 (1020 - 3520)	17.45	15.78	97
	Non Duct	Duct	Duct		9100	11500	11500		32100 (12600 - 32100)	3540 (1040 - 3540)	17.55	15.87	97
	Duct	Non Duct	Non Duct		9700	11200	11200		32100 (12600 - 32100)	3520 (1020 - 3520)	17.45	15.78	97
	Duct	Non Duct	Duct		9400	11000	11700		32100 (12600 - 32100)	3540 (1040 - 3540)	17.55	15.87	97
	Duct	Duct	Duct		9100	11500	11500		32100 (12600 - 32100)	3560 (1060 - 3560)	17.64	15.96	97
06+06+06+06	Non Duct	Non Duct	Non Duct	Non Duct	6500	6500	6500	6500	26000 (12600 - 26000)	2080 (1000 - 2080)	10.10	9.13	99
06+06+06+09	Non Duct	Non Duct	Non Duct	Non Duct	6500	6500	6500	9000	28500 (12600 - 28500)	2390 (1000 - 2390)	11.61	10.50	99
	Non Duct	Non Duct	Non Duct	Duct	6500	6500	6500	9000	28500 (12600 - 28500)	2420 (1020 - 2420)	11.75	10.63	99
06+06+06+12	Non Duct	Non Duct	Non Duct	Non Duct	6500	6500	6500	12000	31500 (12600 - 31500)	2870 (1000 - 2870)	13.94	12.60	99
	Non Duct	Non Duct	Non Duct	Duct	6500	6500	6500	12000	31500 (12600 - 31500)	2890 (1020 - 2890)	14.03	12.69	99
06+06+06+15	Non Duct	Non Duct	Non Duct	Non Duct	6500	6500	6500	14000	33500 (12600 - 33500)	3210 (1000 - 3210)	15.59	14.10	99
	Non Duct	Non Duct	Non Duct	Duct	6500	6500	6500	15000	34500 (12600 - 34500)	3230 (1020 - 3230)	15.69	14.19	99
06+06+09+09	Non Duct	Non Duct	Non Duct	Non Duct	6500	6500	9000	9000	31000 (12600 - 31000)	2790 (1000 - 2790)	13.55	12.25	99
	Non Duct	Non Duct	Non Duct	Duct	6500	6500	9000	9000	31000 (12600 - 31000)	2820 (1020 - 2820)	13.69	12.38	99
	Non Duct	Non Duct	Duct	Duct	6500	6500	9000	9000	31000 (12600 - 31000)	2850 (1040 - 2850)	13.84	12.52	99
06+06+09+12	Non Duct	Non Duct	Non Duct	Non Duct	6500	6500	9000	12000	34000 (12600 - 34000)	3290 (1000 - 3290)	15.98	14.45	99
	Non Duct	Non Duct	Non Duct	Duct	6500	6500	9000	12000	34000 (12600 - 34000)	3310 (1020 - 3310)	16.07	14.54	99
	Non Duct	Non Duct	Duct	Non Duct	6500	6500	9000	12000	34000 (12600 - 34000)	3320 (1020 - 3320)	16.12	14.58	99
	Non Duct	Non Duct	Duct	Duct	6500	6500	9000	12000	34000 (12600 - 34000)	3340 (1040 - 3340)	16.22	14.67	99
06+06+09+15	Non Duct	Non Duct	Non Duct	Non Duct	6400	6400	8800	13800	35400 (12600 - 36400)	3760 (1000 - 3900)	18.26	16.51	99
	Non Duct	Non Duct	Non Duct	Duct	6200	6200	8600	14200	35200 (12600 - 36400)	3780 (1020 - 3920)	18.36	16.60	99
	Non Duct	Non Duct	Duct	Non Duct	6300	6300	8800	13800	35200 (12600 - 36000)	3800 (1020 - 3940)	18.45	16.69	99
	Non Duct	Non Duct	Duct	Duct	6100	6100	8600	14200	35000 (12600 - 36000)	3820 (1040 - 3960)	18.55	16.78	99
06+06+09+18	Non Duct	Non Duct	Non Duct	Non Duct	5900	5900	8300	15900	36000 (12600 - 36400)	3820 (1000 - 3900)	18.55	16.78	99
	Non Duct	Non Duct	Non Duct	Duct	5900	5900	8300	15700	35800 (12600 - 36400)	3840 (1020 - 3920)	18.65	16.86	99
	Non Duct	Non Duct	Duct	Non Duct	5900	5900	8100	15900	35800 (12600 - 36000)	3840 (1020 - 3920)	18.65	16.86	99
	Non Duct	Non Duct	Duct	Duct	5900	5900	8100	15700	35600 (12600 - 36000)	3860 (1040 - 3940)	18.75	16.95	99
06+06+12+12	Non Duct	Non Duct	Non Duct	Non Duct	6200	6200	11500	11500	35400 (12600 - 36400)	3760 (1000 - 3900)	18.26	16.51	99
	Non Duct	Non Duct	Non Duct	Duct	6200	6200	11400	11400	35200 (12600 - 36400)	3780 (1020 - 3920)	18.36	16.60	99
	Non Duct	Non Duct	Duct	Duct	6200	6200	11300	11300	35000 (12600 - 36400)	3800 (1040 - 3940)	18.45	16.69	99
06+06+12+15	Non Duct	Non Duct	Non Duct	Non Duct	6000	6000	11200	12800	36000 (12600 - 36400)	3820 (1000 - 3900)	18.55	16.78	99
	Non Duct	Non Duct	Non Duct	Duct	5800	5800	10600	13600	35800 (12600 - 36400)	3840 (1020 - 3920)	18.65	16.86	99
	Non Duct	Non Duct	Duct	Non Duct	6000	6000	11000	12800	35800 (12600 - 36400)	3840 (1020 - 3920)	18.65	16.86	99
	Non Duct	Non Duct	Duct	Duct	5800	5800	10600	13400	35600 (12600 - 36400)	3860 (1040 - 3940)	18.75	16.95	99
06+06+15+15	Non Duct	Non Duct	Non Duct	Non Duct	5700	5700	12300	12300	36000 (12600 - 36400)	3820 (1000 - 3900)	18.55	16.78	99
	Non Duct	Non Duct	Non Duct	Duct	5500	5500	12000	12800	35800 (12600 - 36400)	3840 (1020 - 3920)	18.65	16.86	99
	Non Duct	Non Duct	Duct	Duct	5400	5400	12400	12400	35600 (12600 - 36400)	3860 (1040 - 3940)	18.75	16.95	99
06+09+09+09	Non Duct	Non Duct	Non Duct	Non Duct	6500	9000	9000	9000	33500 (12600 - 33500)	3210 (1000 - 3210)	15.59	14.10	99
	Non Duct	Non Duct	Non Duct	Duct	6500	9000	9000	9000	33500 (12600 - 33500)	3240 (1020 - 3240)	15.73	14.23	99
	Non Duct	Non Duct	Duct	Duct	6500	9000	9000	9000	33500 (12600 - 33500)	3270 (1040 - 3270)	15.88	14.36	99
	Non Duct	Duct	Duct	Duct	6500	9000	9000	9000	33500 (12600 - 33500)	3300 (1060 - 3300)	16.03	14.49	99

MXZ-4B36NA-1 COOLING

Indoor units combination	Indoor type				Cooling capacity(BTU/h)					Power consumption (W)	Current(A)		P/F(%)
	A	B	C	D	Unit A	Unit B	Unit C	Unit D	Total		208V	230V	
06+09+09+12	Non Duct	Non Duct	Non Duct	Non Duct	6400	8700	8700	11600	35400 (12600 - 36400)	3760 (1000 - 3900)	18.26	16.51	99
	Non Duct	Non Duct	Non Duct	Duct	6300	8700	8700	11500	35200 (12600 - 36400)	3780 (1020 - 3920)	18.36	16.60	99
	Non Duct	Non Duct	Duct	Non Duct	6300	8700	8700	11500	35200 (12600 - 36000)	3800 (1020 - 3930)	18.45	16.69	99
	Non Duct	Non Duct	Duct	Duct	6200	8700	8700	11400	35000 (12600 - 36000)	3820 (1040 - 3950)	18.55	16.78	99
	Non Duct	Duct	Duct	Non Duct	6200	8700	8700	11400	35000 (12600 - 35600)	3840 (1040 - 3960)	18.65	16.86	99
	Non Duct	Duct	Duct	Duct	6200	8600	8600	11400	34800 (12600 - 35600)	3860 (1060 - 3980)	18.75	16.95	99
06+09+09+15	Non Duct	Non Duct	Non Duct	Non Duct	6100	8400	8400	13100	36000 (12600 - 36400)	3820 (1000 - 3900)	18.55	16.78	99
	Non Duct	Non Duct	Non Duct	Duct	5800	8200	8200	13600	35800 (12600 - 36400)	3840 (1020 - 3920)	18.65	16.86	99
	Non Duct	Non Duct	Duct	Non Duct	6000	8300	8300	13000	35600 (12600 - 36000)	3850 (1020 - 3930)	18.70	16.91	99
	Non Duct	Non Duct	Duct	Duct	5800	8100	8100	13600	35600 (12600 - 36000)	3870 (1040 - 3950)	18.79	17.00	99
	Non Duct	Duct	Duct	Non Duct	5900	8300	8300	12900	35400 (12600 - 35600)	3880 (1040 - 3960)	18.84	17.04	99
	Non Duct	Duct	Duct	Duct	5800	8000	8000	13400	35200 (12600 - 35600)	3900 (1060 - 3980)	18.94	17.13	99
06+09+12+12	Non Duct	Non Duct	Non Duct	Non Duct	5900	8300	10900	10900	36000 (12600 - 36400)	3820 (1000 - 3900)	18.55	16.78	99
	Non Duct	Non Duct	Non Duct	Duct	5900	8300	10900	10900	36000 (12600 - 36400)	3840 (1020 - 3920)	18.65	16.86	99
	Non Duct	Non Duct	Duct	Duct	5900	8300	10900	10900	36000 (12600 - 36400)	3860 (1040 - 3940)	18.75	16.95	99
	Non Duct	Duct	Non Duct	Non Duct	5900	8100	10800	10800	35600 (12600 - 36000)	3850 (1020 - 3930)	18.70	16.91	99
	Non Duct	Duct	Non Duct	Duct	5900	8100	10800	10800	35600 (12600 - 36000)	3870 (1040 - 3950)	18.79	17.00	99
	Non Duct	Duct	Duct	Duct	5900	8100	10800	10800	35600 (12600 - 36000)	3890 (1060 - 3970)	18.89	17.08	99
06+09+12+15	Non Duct	Non Duct	Non Duct	Non Duct	5600	7800	10500	12100	36000 (12600 - 36400)	3820 (1000 - 3900)	18.55	16.78	99
	Non Duct	Non Duct	Non Duct	Duct	5500	7600	10200	12700	36000 (12600 - 36400)	3840 (1020 - 3920)	18.65	16.86	99
	Non Duct	Non Duct	Duct	Non Duct	5600	7800	10500	12100	36000 (12600 - 36400)	3840 (1020 - 3920)	18.65	16.86	99
	Non Duct	Non Duct	Duct	Duct	5500	7600	10200	12700	36000 (12600 - 36400)	3860 (1040 - 3940)	18.75	16.95	99
	Non Duct	Duct	Non Duct	Non Duct	5600	7700	10300	12000	35600 (12600 - 36000)	3850 (1020 - 3930)	18.70	16.91	99
	Non Duct	Duct	Non Duct	Duct	5400	7500	10100	12600	35600 (12600 - 36000)	3870 (1040 - 3950)	18.79	17.00	99
	Non Duct	Duct	Duct	Non Duct	5600	7700	10300	12000	35600 (12600 - 36000)	3870 (1040 - 3950)	18.79	17.00	99
	Non Duct	Duct	Duct	Duct	5400	7500	10100	12600	35600 (12600 - 36000)	3890 (1060 - 3970)	18.89	17.08	99
09+09+09+09	Non Duct	Non Duct	Non Duct	Non Duct	8850	8850	8850	8850	35400 (12600 - 36400)	3760 (1000 - 3900)	18.26	16.51	99
	Non Duct	Non Duct	Non Duct	Duct	8850	8850	8850	8600	35150 (12600 - 36000)	3800 (1020 - 3930)	18.45	16.69	99
	Non Duct	Non Duct	Duct	Duct	8850	8850	8600	8600	34900 (12600 - 35600)	3850 (1040 - 3960)	18.70	16.91	99
	Non Duct	Duct	Duct	Duct	8850	8600	8600	8600	34650 (12600 - 35200)	3900 (1060 - 3990)	18.94	17.13	99
	Duct	Duct	Duct	Duct	8600	8600	8600	8600	34400 (12600 - 34800)	3940 (1080 - 4020)	19.13	17.30	99
09+09+09+12	Non Duct	Non Duct	Non Duct	Non Duct	8300	8300	8300	11100	36000 (12600 - 36400)	3820 (1000 - 3900)	18.55	16.78	99
	Non Duct	Non Duct	Non Duct	Duct	8300	8300	8300	11100	36000 (12600 - 36400)	3840 (1020 - 3920)	18.65	16.86	99
	Non Duct	Non Duct	Duct	Non Duct	8300	8300	7900	11100	35600 (12600 - 36000)	3850 (1020 - 3930)	18.70	16.91	99
	Non Duct	Non Duct	Duct	Duct	8300	8300	7900	11100	35600 (12600 - 36000)	3870 (1040 - 3950)	18.79	17.00	99
	Non Duct	Duct	Duct	Non Duct	8300	7900	7900	11100	35200 (12600 - 35600)	3880 (1040 - 3960)	18.84	17.04	99
	Non Duct	Duct	Duct	Duct	8300	7900	7900	11100	35200 (12600 - 35600)	3900 (1060 - 3980)	18.94	17.13	99
	Duct	Duct	Duct	Non Duct	7900	7900	7900	11100	34800 (12600 - 35200)	3910 (1060 - 3990)	18.99	17.17	99
	Duct	Duct	Duct	Duct	7900	7900	7900	11100	34800 (12600 - 35200)	3930 (1080 - 4010)	19.09	17.26	99
09+09+09+15	Non Duct	Non Duct	Non Duct	Non Duct	7900	7900	7900	12300	36000 (12600 - 36400)	3820 (1000 - 3900)	18.55	16.78	99
	Non Duct	Non Duct	Non Duct	Duct	7700	7700	7700	12900	36000 (12600 - 36400)	3840 (1020 - 3920)	18.65	16.86	99
	Non Duct	Non Duct	Duct	Non Duct	7900	7900	7500	12300	35600 (12600 - 36000)	3850 (1020 - 3930)	18.70	16.91	99
	Non Duct	Non Duct	Duct	Duct	7700	7700	7300	12900	35600 (12600 - 36000)	3870 (1040 - 3950)	18.79	17.00	99
	Non Duct	Duct	Duct	Non Duct	7900	7500	7500	12300	35200 (12600 - 35600)	3880 (1040 - 3960)	18.84	17.04	99
	Non Duct	Duct	Duct	Duct	7700	7300	7300	12900	35200 (12600 - 35600)	3900 (1060 - 3980)	18.94	17.13	99
	Duct	Duct	Duct	Non Duct	7500	7500	7500	12300	34800 (12600 - 35200)	3910 (1060 - 3990)	18.99	17.17	99
	Duct	Duct	Duct	Duct	7300	7300	7300	12900	34800 (12600 - 35200)	3930 (1080 - 4010)	19.09	17.26	99
09+09+12+12	Non Duct	Non Duct	Non Duct	Non Duct	7700	7700	10300	10300	36000 (12600 - 36400)	3820 (1000 - 3900)	18.55	16.78	99
	Non Duct	Non Duct	Non Duct	Duct	7700	7700	10300	10300	36000 (12600 - 36400)	3840 (1020 - 3920)	18.65	16.86	99
	Non Duct	Non Duct	Duct	Duct	7700	7700	10300	10300	36000 (12600 - 36400)	3860 (1040 - 3940)	18.75	16.95	99
	Non Duct	Duct	Non Duct	Non Duct	7700	7300	10300	10300	35600 (12600 - 36000)	3850 (1020 - 3930)	18.70	16.91	99
	Non Duct	Duct	Non Duct	Duct	7700	7300	10300	10300	35600 (12600 - 36000)	3870 (1040 - 3950)	18.79	17.00	99
	Non Duct	Duct	Duct	Duct	7700	7300	10300	10300	35600 (12600 - 36000)	3890 (1060 - 3970)	18.89	17.08	99
	Duct	Duct	Non Duct	Non Duct	7300	7300	10300	10300	35200 (12600 - 35600)	3880 (1040 - 3960)	18.84	17.04	99
	Duct	Duct	Non Duct	Duct	7300	7300	10300	10300	35200 (12600 - 35600)	3900 (1060 - 3980)	18.94	17.13	99
	Duct	Duct	Duct	Duct	7300	7300	10300	10300	35200 (12600 - 35600)	3920 (1080 - 4000)	19.04	17.22	99

MXZ-4B36NA-1 HEATING

Indoor units combination	Indoor type				Heating capacity(BTU/h)					Power consumption (W)	Current(A)		P/F(%)
	A	B	C	D	Unit A	Unit B	Unit C	Unit D	Total		208V	230V	
06	Non Duct				7800				7800 (6800 - 14400)	640 (540 - 1460)	3.24	2.93	95
09	Non Duct				10900				10900 (8600 - 15400)	1040 (780 - 1520)	5.26	4.76	95
	Duct				10900				10900 (8600 - 15400)	1100 (780 - 1520)	5.57	5.03	95
12	Non Duct				14400				14400 (8600 - 16400)	1320 (780 - 1600)	6.68	6.04	95
	Duct				13600				13600 (8600 - 16400)	1380 (780 - 1600)	6.98	6.32	95
15	Non Duct				18000				18000 (8600 - 21100)	1880 (780 - 2280)	9.51	8.60	95
	Duct				18000				18000 (8600 - 21100)	1940 (780 - 2280)	9.82	8.88	95
18	Non Duct				21600				21600 (8600 - 24900)	2360 (780 - 2770)	11.94	10.80	95
	Duct				21600				21600 (8600 - 24900)	2410 (780 - 2770)	12.20	11.03	95
24	Non Duct				23200				23200 (8600 - 27800)	2520 (780 - 3000)	12.75	11.53	95
06+06	Non Duct	Non Duct			7800	7800			15600 (11000 - 31000)	1020 (740 - 2560)	5.06	4.57	97
06+09	Non Duct	Non Duct			7800	10900			18700 (11000 - 31000)	1300 (740 - 2560)	6.44	5.83	97
	Non Duct	Duct			7800	10900			18700 (11000 - 31000)	1360 (740 - 2560)	6.74	6.10	97
06+12	Non Duct	Non Duct			7800	14400			22200 (11000 - 31000)	1680 (740 - 2560)	8.33	7.53	97
	Non Duct	Duct			7800	13600			21400 (11000 - 31000)	1740 (740 - 2560)	8.62	7.80	97
06+15	Non Duct	Non Duct			7800	18000			25800 (11000 - 33000)	2080 (740 - 2800)	10.31	9.32	97
	Non Duct	Duct			7800	18000			25800 (11000 - 33000)	2080 (740 - 2800)	10.31	9.32	97
06+18	Non Duct	Non Duct			7200	19800			27000 (11000 - 35000)	2200 (740 - 2920)	10.90	9.86	97
	Non Duct	Duct			7200	19800			27000 (11000 - 35000)	2200 (740 - 2920)	10.90	9.86	97
06+24	Non Duct	Non Duct			6800	20200			27000 (11000 - 35000)	2140 (740 - 2860)	10.61	9.59	97
09+09	Non Duct	Non Duct			10900	10900			21800 (11000 - 31000)	1580 (740 - 2560)	7.83	7.08	97
	Non Duct	Duct			10900	10900			21800 (11000 - 31000)	1640 (740 - 2560)	8.13	7.35	97
	Duct	Duct			10900	10900			21800 (11000 - 31000)	1700 (740 - 2560)	8.43	7.62	97
09+12	Non Duct	Non Duct			10900	14400			25300 (11000 - 33000)	1980 (740 - 2800)	9.81	8.87	97
	Non Duct	Duct			10900	13600			24500 (11000 - 33000)	1980 (740 - 2800)	9.81	8.87	97
	Duct	Non Duct			10900	14400			25300 (11000 - 33000)	1980 (740 - 2800)	9.81	8.87	97
	Duct	Duct			10900	13600			24500 (11000 - 33000)	1980 (740 - 2800)	9.81	8.87	97
09+15	Non Duct	Non Duct			10100	16900			27000 (11000 - 35000)	2200 (740 - 2920)	10.90	9.86	97
	Non Duct	Duct			10100	16900			27000 (11000 - 35000)	2200 (740 - 2920)	10.90	9.86	97
	Duct	Non Duct			10100	16900			27000 (11000 - 35000)	2200 (740 - 2920)	10.90	9.86	97
	Duct	Duct			10100	16900			27000 (11000 - 35000)	2200 (740 - 2920)	10.90	9.86	97
09+18	Non Duct	Non Duct			9000	18000			27000 (11000 - 35000)	2200 (740 - 2920)	10.90	9.86	97
	Non Duct	Duct			9000	18000			27000 (11000 - 35000)	2200 (740 - 2920)	10.90	9.86	97
	Duct	Non Duct			9000	18000			27000 (11000 - 35000)	2200 (740 - 2920)	10.90	9.86	97
	Duct	Duct			9000	18000			27000 (11000 - 35000)	2200 (740 - 2920)	10.90	9.86	97
09+24	Non Duct	Non Duct			7300	19700			27000 (11000 - 35000)	1980 (740 - 2740)	9.81	8.87	97
	Duct	Non Duct			7300	19700			27000 (11000 - 35000)	1980 (740 - 2740)	9.81	8.87	97
12+12	Non Duct	Non Duct			13500	13500			27000 (11000 - 35000)	2200 (740 - 2920)	10.90	9.86	97
	Non Duct	Duct			13900	13100			27000 (11000 - 35000)	2200 (740 - 2920)	10.90	9.86	97
	Duct	Duct			13500	13500			27000 (11000 - 35000)	2200 (740 - 2920)	10.90	9.86	97
12+15	Non Duct	Non Duct			12000	15000			27000 (11000 - 35000)	2160 (740 - 2860)	10.71	9.68	97
	Non Duct	Duct			12000	15000			27000 (11000 - 35000)	2160 (740 - 2860)	10.71	9.68	97
	Duct	Non Duct			11600	15400			27000 (11000 - 35000)	2160 (740 - 2860)	10.71	9.68	97
	Duct	Duct			11600	15400			27000 (11000 - 35000)	2160 (740 - 2860)	10.71	9.68	97
12+18	Non Duct	Non Duct			10800	16200			27000 (11000 - 35000)	2140 (740 - 2860)	10.61	9.59	97
	Non Duct	Duct			10800	16200			27000 (11000 - 35000)	2140 (740 - 2860)	10.61	9.59	97
	Duct	Non Duct			10400	16600			27000 (11000 - 35000)	2140 (740 - 2860)	10.61	9.59	97
	Duct	Duct			10400	16600			27000 (11000 - 35000)	2140 (740 - 2860)	10.61	9.59	97
12+24	Non Duct	Non Duct			10300	16700			27000 (11000 - 35000)	1960 (740 - 2740)	9.71	8.79	97
	Duct	Non Duct			10000	17000			27000 (11000 - 35000)	1960 (740 - 2740)	9.71	8.79	97
15+15	Non Duct	Non Duct			13500	13500			27000 (11000 - 35000)	2120 (740 - 2800)	10.51	9.50	97
	Non Duct	Duct			13500	13500			27000 (11000 - 35000)	2120 (740 - 2800)	10.51	9.50	97
	Duct	Duct			13500	13500			27000 (11000 - 35000)	2120 (740 - 2800)	10.51	9.50	97
15+18	Non Duct	Non Duct			12300	14700			27000 (11000 - 35000)	2110 (740 - 2800)	10.46	9.46	97
	Non Duct	Duct			12300	14700			27000 (11000 - 35000)	2110 (740 - 2800)	10.46	9.46	97
	Duct	Non Duct			12300	14700			27000 (11000 - 35000)	2110 (740 - 2800)	10.46	9.46	97
	Dcut	Duct			12300	14700			27000 (11000 - 35000)	2110 (740 - 2800)	10.46	9.46	97
18+18	Non Duct	Non Duct			13500	13500			27000 (11000 - 35000)	2100 (740 - 2800)	10.41	9.41	97
	Non Duct	Duct			13500	13500			27000 (11000 - 35000)	2100 (740 - 2800)	10.41	9.41	97
	Duct	Duct			13500	13500			27000 (11000 - 35000)	2100 (740 - 2800)	10.41	9.41	97

MXZ-4B36NA-1 HEATING

Indoor units combination	Indoor type				Heating capacity(BTU/h)					Power consumption (W)	Current(A)		P/F(%)
	A	B	C	D	Unit A	Unit B	Unit C	Unit D	Total		208V	230V	
06+06+06	Non Duct	Non Duct	Non Duct		7800	7800	7800		23400 (11400 - 36000)	1750 (740 - 2820)	8.67	7.84	97
06+06+09	Non Duct	Non Duct	Non Duct		7800	7800	10900		26500 (11400 - 36000)	1960 (740 - 2820)	9.71	8.79	97
	Non Duct	Non Duct	Duct		7800	7800	10900		26500 (11400 - 35600)	1960 (740 - 2820)	9.71	8.79	97
06+06+12	Non Duct	Non Duct	Non Duct		7800	7800	14400		30000 (11400 - 36000)	2440 (740 - 2820)	12.09	10.94	97
	Non Duct	Non Duct	Duct		7800	7800	13600		29200 (11400 - 36000)	2440 (740 - 2820)	12.09	10.94	97
06+06+15	Non Duct	Non Duct	Non Duct		7500	7500	17400		32400 (11400 - 36000)	2640 (740 - 2820)	13.08	11.83	97
	Non Duct	Non Duct	Duct		7500	7500	17400		32400 (11400 - 36000)	2640 (740 - 2820)	13.08	11.83	97
06+06+18	Non Duct	Non Duct	Non Duct		6800	6800	18800		32400 (11400 - 36000)	2640 (740 - 2820)	13.08	11.83	97
	Non Duct	Non Duct	Duct		6800	6800	18800		32400 (11400 - 36000)	2640 (740 - 2820)	13.08	11.83	97
06+06+24	Non Duct	Non Duct	Non Duct		6500	6500	19400		32400 (11400 - 36000)	2640 (740 - 2820)	13.08	11.83	97
06+09+09	Non Duct	Non Duct	Non Duct		7800	10900	10900		29600 (11400 - 36000)	2360 (740 - 2820)	11.70	10.58	97
	Non Duct	Non Duct	Duct		7800	10900	10900		29600 (11400 - 35600)	2360 (740 - 2820)	11.70	10.58	97
	Non Duct	Duct	Duct		7800	10900	10900		29600 (11400 - 35200)	2360 (740 - 2820)	11.70	10.58	97
06+09+12	Non Duct	Non Duct	Non Duct		7600	10700	14100		32400 (11400 - 36000)	2640 (740 - 2820)	13.08	11.83	97
	Non Duct	Non Duct	Duct		7800	10900	13600		32300 (11400 - 36000)	2640 (740 - 2820)	13.08	11.83	97
	Non Duct	Duct	Non Duct		7600	10300	14100		32000 (11400 - 35600)	2640 (740 - 2820)	13.08	11.83	97
	Non Duct	Duct	Duct		7800	10500	13600		31900 (11400 - 35600)	2640 (740 - 2820)	13.08	11.83	97
06+09+15	Non Duct	Non Duct	Non Duct		6900	9600	15900		32400 (11400 - 36000)	2640 (740 - 2820)	13.08	11.83	97
	Non Duct	Non Duct	Duct		6900	9600	15900		32400 (11400 - 36000)	2640 (740 - 2820)	13.08	11.83	97
	Non Duct	Duct	Non Duct		6900	9200	15900		32000 (11400 - 35600)	2640 (740 - 2820)	13.08	11.83	97
	Non Duct	Duct	Duct		6900	9200	15900		32000 (11400 - 35600)	2640 (740 - 2820)	13.08	11.83	97
06+09+18	Non Duct	Non Duct	Non Duct		6200	8800	17400		32400 (11400 - 36000)	2640 (740 - 2820)	13.08	11.83	97
	Non Duct	Non Duct	Duct		6200	8800	17400		32400 (11400 - 36000)	2640 (740 - 2820)	13.08	11.83	97
	Non Duct	Duct	Non Duct		6200	8400	17400		32000 (11400 - 35600)	2640 (740 - 2820)	13.08	11.83	97
	Non Duct	Duct	Duct		6200	8400	17400		32000 (11400 - 35600)	2640 (740 - 2820)	13.08	11.83	97
06+09+24	Non Duct	Non Duct	Non Duct		6000	8400	18000		32400 (11400 - 36000)	2640 (740 - 2820)	13.08	11.83	97
	Non Duct	Duct	Non Duct		6000	8000	18000		32000 (11400 - 35600)	2640 (740 - 2820)	13.08	11.83	97
06+12+12	Non Duct	Non Duct	Non Duct		7000	12700	12700		32400 (11400 - 36000)	2640 (740 - 2820)	13.08	11.83	97
	Non Duct	Non Duct	Duct		7100	13000	12300		32400 (11400 - 36000)	2640 (740 - 2820)	13.08	11.83	97
	Non Duct	Duct	Duct		7200	12600	12600		32400 (11400 - 36000)	2640 (740 - 2820)	13.08	11.83	97
06+12+15	Non Duct	Non Duct	Non Duct		6300	11600	14500		32400 (11400 - 36000)	2640 (740 - 2820)	13.08	11.83	97
	Non Duct	Non Duct	Duct		6300	11600	14500		32400 (11400 - 36000)	2640 (740 - 2820)	13.08	11.83	97
	Non Duct	Duct	Non Duct		6400	11200	14800		32400 (11400 - 36000)	2640 (740 - 2820)	13.08	11.83	97
	Non Duct	Duct	Duct		6400	11200	14800		32400 (11400 - 36000)	2640 (740 - 2820)	13.08	11.83	97
06+12+18	Non Duct	Non Duct	Non Duct		5700	10700	16000		32400 (11400 - 36000)	2640 (740 - 2820)	13.08	11.83	97
	Non Duct	Non Duct	Duct		5700	10700	16000		32400 (11400 - 36000)	2640 (740 - 2820)	13.08	11.83	97
	Non Duct	Duct	Non Duct		5900	10200	16300		32400 (11400 - 36000)	2640 (740 - 2820)	13.08	11.83	97
	Non Duct	Duct	Duct		5900	10200	16300		32400 (11400 - 36000)	2640 (740 - 2820)	13.08	11.83	97
06+15+15	Non Duct	Non Duct	Non Duct		5800	13300	13300		32400 (11400 - 36000)	2640 (740 - 2820)	13.08	11.83	97
	Non Duct	Non Duct	Duct		5800	13300	13300		32400 (11400 - 36000)	2640 (740 - 2820)	13.08	11.83	97
	Non Duct	Duct	Duct		5800	13300	13300		32400 (11400 - 36000)	2640 (740 - 2820)	13.08	11.83	97
06+15+18	Non Duct	Non Duct	Non Duct		5300	12300	14800		32400 (11400 - 36000)	2640 (740 - 2820)	13.08	11.83	97
	Non Duct	Non Duct	Duct		5300	12300	14800		32400 (11400 - 36000)	2640 (740 - 2820)	13.08	11.83	97
	Non Duct	Duct	Non Duct		5300	12300	14800		32400 (11400 - 36000)	2640 (740 - 2820)	13.08	11.83	97
	Non Duct	Duct	Duct		5300	12300	14800		32400 (11400 - 36000)	2640 (740 - 2820)	13.08	11.83	97
06+18+18	Non Duct	Non Duct	Non Duct		5000	13700	13700		32400 (11400 - 36000)	2640 (740 - 2820)	13.08	11.83	97
	Non Duct	Non Duct	Duct		5000	13700	13700		32400 (11400 - 36000)	2640 (740 - 2820)	13.08	11.83	97
	Non Duct	Duct	Duct		5000	13700	13700		32400 (11400 - 36000)	2640 (740 - 2820)	13.08	11.83	97
09+09+09	Non Duct	Non Duct	Non Duct		10800	10800	10800		32400 (11400 - 36000)	2640 (740 - 2820)	13.08	11.83	97
	Non Duct	Non Duct	Duct		10800	10800	10400		32000 (11400 - 35600)	2640 (740 - 2820)	13.08	11.83	97
	Non Duct	Duct	Duct		10800	10400	10400		31600 (11400 - 35200)	2640 (740 - 2820)	13.08	11.83	97
	Duct	Duct	Duct		10400	10400	10400		31200 (11400 - 34800)	2640 (740 - 2820)	13.08	11.83	97
09+09+12	Non Duct	Non Duct	Non Duct		9800	9800	12800		32400 (11400 - 36000)	2640 (740 - 2820)	13.08	11.83	97
	Non Duct	Non Duct	Duct		10000	10000	12400		32400 (11400 - 36000)	2640 (740 - 2820)	13.08	11.83	97
	Non Duct	Duct	Non Duct		9800	9400	12800		32000 (11400 - 35600)	2640 (740 - 2820)	13.08	11.83	97
	Non Duct	Duct	Duct		10000	9600	12400		32000 (11400 - 35600)	2640 (740 - 2820)	13.08	11.83	97
	Duct	Duct	Non Duct		9400	9400	12800		31600 (11400 - 35200)	2640 (740 - 2820)	13.08	11.83	97
	Duct	Duct	Duct		9600	9600	12400		31600 (11400 - 35200)	2640 (740 - 2820)	13.08	11.83	97

MXZ-4B36NA-1 HEATING

Indoor units combination	Indoor type				Heating capacity(BTU/h)					Power consumption (W)	Current(A)		P/F(%)
	A	B	C	D	Unit A	Unit B	Unit C	Unit D	Total		208V	230V	
09+09+15	Non Duct	Non Duct	Non Duct		8900	8900	14600		32400 (11400 - 36000)	2640 (740 - 2820)	13.08	11.83	97
	Non Duct	Non Duct	Duct		8900	8900	14600		32400 (11400 - 36000)	2640 (740 - 2820)	13.08	11.83	97
	Non Duct	Duct	Non Duct		8900	8500	14600		32000 (11400 - 35600)	2640 (740 - 2820)	13.08	11.83	97
	Non Duct	Duct	Duct		8900	8500	14600		32000 (11400 - 35600)	2640 (740 - 2820)	13.08	11.83	97
	Duct	Duct	Non Duct		8500	8500	14600		31600 (11400 - 35200)	2640 (740 - 2820)	13.08	11.83	97
	Duct	Duct	Duct		8500	8500	14600		31600 (11400 - 35200)	2640 (740 - 2820)	13.08	11.83	97
09+09+18	Non Duct	Non Duct	Non Duct		8100	8100	16200		32400 (11400 - 36000)	2640 (740 - 2820)	13.08	11.83	97
	Non Duct	Non Duct	Duct		8100	8100	16200		32400 (11400 - 36000)	2640 (740 - 2820)	13.08	11.83	97
	Non Duct	Duct	Non Duct		8100	7700	16200		32000 (11400 - 35600)	2640 (740 - 2820)	13.08	11.83	97
	Non Duct	Duct	Duct		8100	7700	16200		32000 (11400 - 35600)	2640 (740 - 2820)	13.08	11.83	97
	Duct	Duct	Non Duct		7700	7700	16200		31600 (11400 - 35200)	2640 (740 - 2820)	13.08	11.83	97
	Duct	Duct	Duct		7700	7700	16200		31600 (11400 - 35200)	2640 (740 - 2820)	13.08	11.83	97
09+09+24	Non Duct	Non Duct	Non Duct		7800	7800	16800		32400 (11400 - 36000)	2640 (740 - 2820)	13.08	11.83	97
	Non Duct	Duct	Non Duct		7800	7400	16800		32000 (11400 - 35600)	2640 (740 - 2820)	13.08	11.83	97
	Duct	Duct	Non Duct		7400	7400	16800		31600 (11400 - 35200)	2640 (740 - 2820)	13.08	11.83	97
09+12+12	Non Duct	Non Duct	Non Duct		9000	11700	11700		32400 (11400 - 36000)	2640 (740 - 2820)	13.08	11.83	97
	Non Duct	Non Duct	Duct		9100	12000	11300		32400 (11400 - 36000)	2640 (740 - 2820)	13.08	11.83	97
	Non Duct	Duct	Duct		9400	11500	11500		32400 (11400 - 36000)	2640 (740 - 2820)	13.08	11.83	97
	Duct	Non Duct	Non Duct		8600	11700	11700		32000 (11400 - 35600)	2640 (740 - 2820)	13.08	11.83	97
	Duct	Non Duct	Duct		8700	12000	11300		32000 (11400 - 35600)	2640 (740 - 2820)	13.08	11.83	97
	Duct	Duct	Duct		9000	11500	11500		32000 (11400 - 35600)	2640 (740 - 2820)	13.08	11.83	97
09+12+15	Non Duct	Non Duct	Non Duct		8200	10800	13400		32400 (11400 - 36000)	2640 (740 - 2820)	13.08	11.83	97
	Non Duct	Non Duct	Duct		8200	10800	13400		32400 (11400 - 36000)	2640 (740 - 2820)	13.08	11.83	97
	Non Duct	Duct	Non Duct		8300	10400	13700		32400 (11400 - 36000)	2640 (740 - 2820)	13.08	11.83	97
	Non Duct	Duct	Duct		8300	10400	13700		32400 (11400 - 36000)	2640 (740 - 2820)	13.08	11.83	97
	Duct	Non Duct	Non Duct		7800	10800	13400		32000 (11400 - 35600)	2640 (740 - 2820)	13.08	11.83	97
	Duct	Non Duct	Duct		7800	10800	13400		32000 (11400 - 35600)	2640 (740 - 2820)	13.08	11.83	97
	Duct	Duct	Non Duct		7900	10400	13700		32000 (11400 - 35600)	2640 (740 - 2820)	13.08	11.83	97
	Duct	Duct	Duct		7900	10400	13700		32000 (11400 - 35600)	2640 (740 - 2820)	13.08	11.83	97
09+12+18	Non Duct	Non Duct	Non Duct		7600	9900	14900		32400 (11400 - 36000)	2640 (740 - 2820)	13.08	11.83	97
	Non Duct	Non Duct	Duct		7600	9900	14900		32400 (11400 - 36000)	2640 (740 - 2820)	13.08	11.83	97
	Non Duct	Duct	Non Duct		7600	9600	15200		32400 (11400 - 36000)	2640 (740 - 2820)	13.08	11.83	97
	Non Duct	Duct	Duct		7600	9600	15200		32400 (11400 - 36000)	2640 (740 - 2820)	13.08	11.83	97
	Duct	Non Duct	Non Duct		7200	9900	14900		32000 (11400 - 35600)	2640 (740 - 2820)	13.08	11.83	97
	Duct	Non Duct	Duct		7200	9900	14900		32000 (11400 - 35600)	2640 (740 - 2820)	13.08	11.83	97
	Duct	Duct	Non Duct		7200	9600	15200		32000 (11400 - 35600)	2640 (740 - 2820)	13.08	11.83	97
	Duct	Duct	Duct		7200	9600	15200		32000 (11400 - 35600)	2640 (740 - 2820)	13.08	11.83	97
09+15+15	Non Duct	Non Duct	Non Duct		7600	12400	12400		32400 (11400 - 36000)	2640 (740 - 2820)	13.08	11.83	97
	Non Duct	Non Duct	Duct		7600	12400	12400		32400 (11400 - 36000)	2640 (740 - 2820)	13.08	11.83	97
	Non Duct	Duct	Duct		7600	12400	12400		32400 (11400 - 36000)	2640 (740 - 2820)	13.08	11.83	97
	Duct	Non Duct	Non Duct		7200	12400	12400		32000 (11400 - 35600)	2640 (740 - 2820)	13.08	11.83	97
	Duct	Non Duct	Duct		7200	12400	12400		32000 (11400 - 35600)	2640 (740 - 2820)	13.08	11.83	97
	Duct	Duct	Duct		7200	12400	12400		32000 (11400 - 35600)	2640 (740 - 2820)	13.08	11.83	97
09+15+18	Non Duct	Non Duct	Non Duct		7000	11500	13900		32400 (11400 - 36000)	2640 (740 - 2820)	13.08	11.83	97
	Non Duct	Non Duct	Duct		7000	11500	13900		32400 (11400 - 36000)	2640 (740 - 2820)	13.08	11.83	97
	Non Duct	Duct	Non Duct		7000	11500	13900		32400 (11400 - 36000)	2640 (740 - 2820)	13.08	11.83	97
	Non Duct	Duct	Duct		7000	11500	13900		32400 (11400 - 36000)	2640 (740 - 2820)	13.08	11.83	97
	Duct	Non Duct	Non Duct		6600	11500	13900		32000 (11400 - 35600)	2640 (740 - 2820)	13.08	11.83	97
	Duct	Non Duct	Duct		6600	11500	13900		32000 (11400 - 35600)	2640 (740 - 2820)	13.08	11.83	97
	Duct	Duct	Non Duct		6600	11500	13900		32000 (11400 - 35600)	2640 (740 - 2820)	13.08	11.83	97
	Duct	Duct	Duct		6600	11500	13900		32000 (11400 - 35600)	2640 (740 - 2820)	13.08	11.83	97
09+18+18	Non Duct	Non Duct	Non Duct		6600	12900	12900		32400 (11400 - 36000)	2640 (740 - 2820)	13.08	11.83	97
	Non Duct	Non Duct	Duct		6600	12900	12900		32400 (11400 - 36000)	2640 (740 - 2820)	13.08	11.83	97
	Non Duct	Duct	Duct		6600	12900	12900		32400 (11400 - 36000)	2640 (740 - 2820)	13.08	11.83	97
	Duct	Non Duct	Non Duct		6200	12900	12900		32000 (11400 - 35600)	2640 (740 - 2820)	13.08	11.83	97
	Duct	Non Duct	Duct		6200	12900	12900		32000 (11400 - 35600)	2640 (740 - 2820)	13.08	11.83	97
	Duct	Duct	Duct		6200	12900	12900		32000 (11400 - 35600)	2640 (740 - 2820)	13.08	11.83	97

MXZ-4B36NA-1 HEATING

Indoor units combination	Indoor type				Heating capacity(BTU/h)					Power consumption (W)	Current(A)		P/F(%)
	A	B	C	D	Unit A	Unit B	Unit C	Unit D	Total		208V	230V	
12+12+12	Non Duct	Non Duct	Non Duct		10800	10800	10800		32400 (11400 - 36000)	2640 (740 - 2820)	13.08	11.83	97
	Non Duct	Non Duct	Duct		11000	11000	10400		32400 (11400 - 36000)	2640 (740 - 2820)	13.08	11.83	97
	Non Duct	Duct	Duct		11200	10600	10600		32400 (11400 - 36000)	2640 (740 - 2820)	13.08	11.83	97
	Duct	Duct	Duct		10800	10800	10800		32400 (11400 - 36000)	2640 (740 - 2820)	13.08	11.83	97
12+12+15	Non Duct	Non Duct	Non Duct		10000	10000	12400		32400 (11400 - 36000)	2640 (740 - 2820)	13.08	11.83	97
	Non Duct	Non Duct	Duct		10000	10000	12400		32400 (11400 - 36000)	2640 (740 - 2820)	13.08	11.83	97
	Non Duct	Duct	Non Duct		10100	9600	12700		32400 (11400 - 36000)	2640 (740 - 2820)	13.08	11.83	97
	Non Duct	Duct	Duct		10100	9600	12700		32400 (11400 - 36000)	2640 (740 - 2820)	13.08	11.83	97
	Duct	Duct	Non Duct		9700	9700	13000		32400 (11400 - 36000)	2640 (740 - 2820)	13.08	11.83	97
	Duct	Duct	Duct		9700	9700	13000		32400 (11400 - 36000)	2640 (740 - 2820)	13.08	11.83	97
12+12+18	Non Duct	Non Duct	Non Duct		9300	9300	13800		32400 (11400 - 36000)	2640 (740 - 2820)	13.08	11.83	97
	Non Duct	Non Duct	Duct		9300	9300	13800		32400 (11400 - 36000)	2640 (740 - 2820)	13.08	11.83	97
	Non Duct	Duct	Non Duct		9400	8900	14100		32400 (11400 - 36000)	2640 (740 - 2820)	13.08	11.83	97
	Non Duct	Duct	Duct		9400	8900	14100		32400 (11400 - 36000)	2640 (740 - 2820)	13.08	11.83	97
	Duct	Duct	Non Duct		9000	9000	14400		32400 (11400 - 36000)	2640 (740 - 2820)	13.08	11.83	97
	Duct	Duct	Duct		9000	9000	14400		32400 (11400 - 36000)	2640 (740 - 2820)	13.08	11.83	97
12+15+15	Non Duct	Non Duct	Non Duct		9000	11700	11700		32400 (11400 - 36000)	2640 (740 - 2820)	13.08	11.83	97
	Non Duct	Non Duct	Duct		9000	11700	11700		32400 (11400 - 36000)	2640 (740 - 2820)	13.08	11.83	97
	Non Duct	Duct	Duct		9000	11700	11700		32400 (11400 - 36000)	2640 (740 - 2820)	13.08	11.83	97
	Duct	Non Duct	Non Duct		9000	11700	11700		32400 (11400 - 36000)	2640 (740 - 2820)	13.08	11.83	97
	Duct	Non Duct	Duct		9000	11700	11700		32400 (11400 - 36000)	2640 (740 - 2820)	13.08	11.83	97
	Duct	Duct	Duct		9000	11700	11700		32400 (11400 - 36000)	2640 (740 - 2820)	13.08	11.83	97
06+06+06+06	Non Duct	Non Duct	Non Duct	Non Duct	7800	7800	7800	7800	31200 (11400 - 43000)	2380 (740 - 3880)	11.56	10.45	99
06+06+06+09	Non Duct	Non Duct	Non Duct	Non Duct	7800	7800	7800	10900	34300 (11400 - 43000)	2680 (740 - 3880)	13.01	11.77	99
	Non Duct	Non Duct	Non Duct	Duct	7800	7800	7800	10900	34300 (11400 - 42600)	3040 (740 - 3900)	14.76	13.35	99
06+06+06+12	Non Duct	Non Duct	Non Duct	Non Duct	7400	7400	7400	13800	36000 (11400 - 43000)	3020 (740 - 3880)	14.67	13.26	99
	Non Duct	Non Duct	Non Duct	Duct	7600	7600	7600	13200	36000 (11400 - 43000)	3040 (740 - 3900)	14.76	13.35	99
06+06+06+15	Non Duct	Non Duct	Non Duct	Non Duct	6800	6800	6800	15600	36000 (11400 - 43000)	3020 (740 - 3880)	14.67	13.26	99
	Non Duct	Non Duct	Non Duct	Duct	6800	6800	6800	15600	36000 (11400 - 43000)	3040 (740 - 3900)	14.76	13.35	99
06+06+09+09	Non Duct	Non Duct	Non Duct	Non Duct	7500	7500	10500	10500	36000 (11400 - 43000)	3020 (740 - 3880)	14.67	13.26	99
	Non Duct	Non Duct	Non Duct	Duct	7500	7500	10500	10100	35600 (11400 - 42600)	3040 (740 - 3900)	14.76	13.35	99
	Non Duct	Non Duct	Duct	Duct	7500	7500	10100	10100	35200 (11400 - 42200)	3060 (740 - 3910)	14.86	13.44	99
06+06+09+12	Non Duct	Non Duct	Non Duct	Non Duct	6900	6900	9600	12600	36000 (11400 - 43000)	3020 (740 - 3880)	14.67	13.26	99
	Non Duct	Non Duct	Non Duct	Duct	7000	7000	9800	12200	36000 (11400 - 43000)	3040 (740 - 3900)	14.76	13.35	99
	Non Duct	Non Duct	Duct	Non Duct	6900	6900	9200	12600	35600 (11400 - 42600)	3040 (740 - 3900)	14.76	13.35	99
	Non Duct	Non Duct	Duct	Duct	7000	7000	9400	12200	35600 (11400 - 42600)	3060 (740 - 3910)	14.86	13.44	99
06+06+09+15	Non Duct	Non Duct	Non Duct	Non Duct	6300	6300	8800	14600	36000 (11400 - 43000)	3020 (740 - 3880)	14.67	13.26	99
	Non Duct	Non Duct	Non Duct	Duct	6300	6300	8800	14600	36000 (11400 - 43000)	3040 (740 - 3900)	14.76	13.35	99
	Non Duct	Non Duct	Duct	Non Duct	6300	6300	8400	14600	35600 (11400 - 42600)	3040 (740 - 3900)	14.76	13.35	99
	Non Duct	Non Duct	Duct	Duct	6300	6300	8400	14600	35600 (11400 - 42600)	3060 (740 - 3910)	14.86	13.44	99
06+06+09+18	Non Duct	Non Duct	Non Duct	Non Duct	5800	5800	8200	16200	36000 (11400 - 43000)	3020 (740 - 3880)	14.67	13.26	99
	Non Duct	Non Duct	Non Duct	Duct	5800	5800	8200	16200	36000 (11400 - 43000)	3040 (740 - 3900)	14.76	13.35	99
	Non Duct	Non Duct	Duct	Non Duct	5800	5800	7800	16200	35600 (11400 - 42600)	3040 (740 - 3900)	14.76	13.35	99
	Non Duct	Non Duct	Duct	Duct	5800	5800	7800	16200	35600 (11400 - 42600)	3060 (740 - 3910)	14.86	13.44	99
06+06+12+12	Non Duct	Non Duct	Non Duct	Non Duct	6300	6300	11700	11700	36000 (11400 - 43000)	3020 (740 - 3880)	14.67	13.26	99
	Non Duct	Non Duct	Non Duct	Duct	6400	6400	11900	11300	36000 (11400 - 43000)	3040 (740 - 3900)	14.76	13.35	99
	Non Duct	Non Duct	Duct	Duct	6600	6600	11400	11400	36000 (11400 - 43000)	3060 (740 - 3910)	14.86	13.44	99
06+06+12+15	Non Duct	Non Duct	Non Duct	Non Duct	5900	5900	10700	13500	36000 (11400 - 43000)	3020 (740 - 3880)	14.67	13.26	99
	Non Duct	Non Duct	Non Duct	Duct	5900	5900	10700	13500	36000 (11400 - 43000)	3040 (740 - 3900)	14.76	13.35	99
	Non Duct	Non Duct	Duct	Non Duct	6000	6000	10300	13700	36000 (11400 - 43000)	3040 (740 - 3900)	14.76	13.35	99
	Non Duct	Non Duct	Duct	Duct	6000	6000	10300	13700	36000 (11400 - 41200)	3060 (740 - 3910)	14.86	13.44	99
06+06+15+15	Non Duct	Non Duct	Non Duct	Non Duct	5400	5400	12600	12600	36000 (11400 - 43000)	3020 (740 - 3880)	14.67	13.26	99
	Non Duct	Non Duct	Non Duct	Duct	5400	5400	12600	12600	36000 (11400 - 43000)	3040 (740 - 3900)	14.76	13.35	99
	Non Duct	Non Duct	Duct	Duct	5400	5400	12600	12600	36000 (11400 - 43000)	3060 (740 - 3910)	14.86	13.44	99
06+09+09+09	Non Duct	Non Duct	Non Duct	Non Duct	6900	9700	9700	9700	36000 (11400 - 43000)	3020 (740 - 3880)	14.67	13.26	99
	Non Duct	Non Duct	Non Duct	Duct	6900	9700	9700	9300	35600 (11400 - 42600)	3040 (740 - 3900)	14.76	13.35	99
	Non Duct	Non Duct	Duct	Duct	6900	9700	9300	9300	35200 (11400 - 42200)	3060 (740 - 3910)	14.86	13.44	99
	Non Duct	Duct	Duct	Duct	6900	9300	9300	9300	34800 (11400 - 41800)	3080 (740 - 3930)	14.96	13.53	99

MXZ-4B36NA-1 HEATING

Indoor units combination	Indoor type				Heating capacity(BTU/h)					Power consumption (W)	Current(A)		P/F(%)
	A	B	C	D	Unit A	Unit B	Unit C	Unit D	Total		208V	230V	
06+09+09+12	Non Duct	Non Duct	Non Duct	Non Duct	6400	8900	8900	11800	36000 (11400 - 43000)	3020 (740 - 3880)	14.67	13.26	99
	Non Duct	Non Duct	Non Duct	Duct	6400	8900	8900	11800	36000 (11400 - 43000)	3040 (740 - 3900)	14.76	13.35	99
	Non Duct	Non Duct	Duct	Non Duct	6400	8900	8500	11800	35600 (11400 - 42600)	3040 (740 - 3900)	14.76	13.35	99
	Non Duct	Non Duct	Duct	Duct	6400	8900	8500	11800	35600 (11400 - 42600)	3060 (740 - 3910)	14.86	13.44	99
	Non Duct	Duct	Duct	Non Duct	6400	8500	8500	11800	35200 (11400 - 42200)	3060 (740 - 3910)	14.86	13.44	99
	Non Duct	Duct	Duct	Duct	6400	8500	8500	11800	35200 (11400 - 42200)	3080 (740 - 3930)	14.96	13.53	99
06+09+09+15	Non Duct	Non Duct	Non Duct	Non Duct	5900	8200	8200	13700	36000 (11400 - 43000)	3020 (740 - 3880)	14.67	13.26	99
	Non Duct	Non Duct	Non Duct	Duct	5900	8200	8200	13700	36000 (11400 - 43000)	3040 (740 - 3900)	14.76	13.35	99
	Non Duct	Non Duct	Duct	Non Duct	5900	8200	7800	13700	35600 (11400 - 42600)	3040 (740 - 3900)	14.76	13.35	99
	Non Duct	Non Duct	Duct	Duct	5900	8200	7800	13700	35600 (11400 - 42600)	3060 (740 - 3910)	14.86	13.44	99
	Non Duct	Duct	Duct	Non Duct	5900	7800	7800	13700	35200 (11400 - 42200)	3060 (740 - 3910)	14.86	13.44	99
	Non Duct	Duct	Duct	Duct	5900	7800	7800	13700	35200 (11400 - 42200)	3080 (740 - 3930)	14.96	13.53	99
06+09+12+12	Non Duct	Non Duct	Non Duct	Non Duct	5900	8300	10900	10900	36000 (11400 - 43000)	3020 (740 - 3880)	14.67	13.26	99
	Non Duct	Non Duct	Non Duct	Duct	5900	8300	10900	10900	36000 (11400 - 43000)	3040 (740 - 3900)	14.76	13.35	99
	Non Duct	Non Duct	Duct	Duct	5900	8300	10900	10900	36000 (11400 - 43000)	3060 (740 - 3910)	14.86	13.44	99
	Non Duct	Duct	Non Duct	Non Duct	5900	7900	10900	10900	35600 (11400 - 42600)	3040 (740 - 3900)	14.76	13.35	99
	Non Duct	Duct	Non Duct	Duct	5900	7900	10900	10900	35600 (11400 - 42600)	3060 (740 - 3910)	14.86	13.44	99
	Non Duct	Duct	Duct	Duct	5900	7900	10900	10900	35600 (11400 - 42600)	3080 (740 - 3930)	14.96	13.53	99
06+09+12+15	Non Duct	Non Duct	Non Duct	Non Duct	5500	7700	10100	12700	36000 (11400 - 43000)	3020 (740 - 3880)	14.67	13.26	99
	Non Duct	Non Duct	Non Duct	Duct	5500	7700	10100	12700	36000 (11400 - 43000)	3040 (740 - 3900)	14.76	13.35	99
	Non Duct	Non Duct	Duct	Non Duct	5500	7700	10100	12700	36000 (11400 - 43000)	3040 (740 - 3900)	14.76	13.35	99
	Non Duct	Non Duct	Duct	Duct	5500	7700	10100	12700	36000 (11400 - 43000)	3060 (740 - 3910)	14.86	13.44	99
	Non Duct	Duct	Non Duct	Non Duct	5500	7300	10100	12700	35600 (11400 - 42600)	3040 (740 - 3900)	14.76	13.35	99
	Non Duct	Duct	Non Duct	Duct	5500	7300	10100	12700	35600 (11400 - 42600)	3060 (740 - 3910)	14.86	13.44	99
	Non Duct	Duct	Duct	Non Duct	5500	7300	10100	12700	35600 (11400 - 42600)	3060 (740 - 3910)	14.86	13.44	99
	Non Duct	Duct	Duct	Duct	5500	7300	10100	12700	35600 (11400 - 42600)	3080 (740 - 3930)	14.96	13.53	99
09+09+09+09	Non Duct	Non Duct	Non Duct	Non Duct	9000	9000	9000	9000	36000 (11400 - 43000)	3020 (740 - 3880)	14.67	13.26	99
	Non Duct	Non Duct	Non Duct	Duct	9000	9000	9000	8600	35600 (11400 - 42600)	3040 (740 - 3900)	14.76	13.35	99
	Non Duct	Non Duct	Duct	Duct	9000	9000	8600	8600	35200 (11400 - 42200)	3060 (740 - 3910)	14.86	13.44	99
	Non Duct	Duct	Duct	Duct	9000	8600	8600	8600	34800 (11400 - 41800)	3080 (740 - 3930)	14.96	13.53	99
	Duct	Duct	Duct	Duct	8600	8600	8600	8600	34400 (11400 - 41400)	3100 (740 - 3940)	15.05	13.61	99
09+09+09+12	Non Duct	Non Duct	Non Duct	Non Duct	8300	8300	8300	11100	36000 (11400 - 43000)	3020 (740 - 3880)	14.67	13.26	99
	Non Duct	Non Duct	Non Duct	Duct	8500	8500	8500	10500	36000 (11400 - 43000)	3040 (740 - 3900)	14.76	13.35	99
	Non Duct	Non Duct	Duct	Non Duct	8300	8300	7900	11100	35600 (11400 - 42600)	3040 (740 - 3900)	14.76	13.35	99
	Non Duct	Non Duct	Duct	Duct	8500	8500	8100	10500	35600 (11400 - 42600)	3060 (740 - 3910)	14.86	13.44	99
	Non Duct	Duct	Duct	Non Duct	8300	7900	7900	11100	35200 (11400 - 42200)	3060 (740 - 3910)	14.86	13.44	99
	Non Duct	Duct	Duct	Duct	8500	8100	8100	10500	35200 (11400 - 42200)	3080 (740 - 3930)	14.96	13.53	99
	Duct	Duct	Duct	Non Duct	7900	7900	7900	11100	34800 (11400 - 41800)	3080 (740 - 3930)	14.96	13.53	99
	Duct	Duct	Duct	Duct	8100	8100	8100	10500	34800 (11400 - 41800)	3100 (740 - 3940)	15.05	13.61	99
09+09+09+15	Non Duct	Non Duct	Non Duct	Non Duct	7700	7700	7700	12900	36000 (11400 - 43000)	3020 (740 - 3880)	14.67	13.26	99
	Non Duct	Non Duct	Non Duct	Duct	7700	7700	7700	12900	36000 (11400 - 43000)	3040 (740 - 3900)	14.76	13.35	99
	Non Duct	Non Duct	Duct	Non Duct	7700	7700	7300	12900	35600 (11400 - 42600)	3040 (740 - 3900)	14.76	13.35	99
	Non Duct	Non Duct	Duct	Duct	7700	7700	7300	12900	35600 (11400 - 42600)	3060 (740 - 3910)	14.86	13.44	99
	Non Duct	Duct	Duct	Non Duct	7700	7300	7300	12900	35200 (11400 - 42200)	3060 (740 - 3910)	14.86	13.44	99
	Non Duct	Duct	Duct	Duct	7700	7300	7300	12900	35200 (11400 - 42200)	3080 (740 - 3930)	14.96	13.53	99
	Duct	Duct	Duct	Non Duct	7300	7300	7300	12900	34800 (11400 - 41800)	3080 (740 - 3930)	14.96	13.53	99
	Duct	Duct	Duct	Duct	7300	7300	7300	12900	34800 (11400 - 41800)	3100 (740 - 3940)	15.05	13.61	99
09+09+12+12	Non Duct	Non Duct	Non Duct	Non Duct	7800	7800	10200	10200	36000 (11400 - 43000)	3020 (740 - 3880)	14.67	13.26	99
	Non Duct	Non Duct	Non Duct	Duct	7900	7900	10400	9800	36000 (11400 - 43000)	3040 (740 - 3900)	14.76	13.35	99
	Non Duct	Non Duct	Duct	Duct	8000	8000	10000	10000	36000 (11400 - 43000)	3060 (740 - 3910)	14.86	13.44	99
	Non Duct	Duct	Non Duct	Non Duct	7800	7400	10200	10200	35600 (11400 - 42600)	3040 (740 - 3900)	14.76	13.35	99
	Non Duct	Duct	Non Duct	Duct	7900	7500	10400	9800	35600 (11400 - 42600)	3060 (740 - 3910)	14.86	13.44	99
	Non Duct	Duct	Duct	Duct	8000	7600	10000	10000	35600 (11400 - 42600)	3080 (740 - 3930)	14.96	13.53	99
	Duct	Duct	Non Duct	Non Duct	7400	7400	10200	10200	35200 (11400 - 42200)	3060 (740 - 3910)	14.86	13.44	99
	Duct	Duct	Non Duct	Duct	7500	7500	10400	9800	35200 (11400 - 42200)	3080 (740 - 3930)	14.96	13.53	99
	Duct	Duct	Duct	Duct	7600	7600	10000	10000	35200 (11400 - 42200)	3100 (740 - 3940)	15.05	13.61	99

MXZ-5B42NA COOLING

Indoor units combination	Indoor type					Cooling Capacity (BTU/h)						Outdoor unit power consumption (W)	Current (A)	Current (A)	Power factor (%)
	Unit A	Unit B	Unit C	Unit D	Unit E	Unit A	Unit B	Unit C	Unit D	Unit E	Total		208V	230V	
06	Non Duct					6500					6500 (5200-6500)	880 (860-880)	4.27	3.86	99
09	Non Duct					9000					9000 (7200-9000)	910 (890-910)	4.42	4.00	99
09	Duct					8800					8800 (7200-9000)	930 (890-930)	4.52	4.08	99
12	Non Duct					12000					12000 (7200-12000)	970 (890-970)	4.71	4.26	99
12	Duct					11800					11800 (7200-12000)	990 (890-990)	4.81	4.35	99
15	Non Duct					14000					14000 (7200-14000)	1040 (890-1040)	5.05	4.57	99
15	Duct					14800					14800 (7200-15000)	1060 (890-1060)	5.15	4.66	99
18	Non Duct					17200					17200 (7200-17200)	1520 (890-1520)	7.38	6.68	99
18	Duct					17000					17000 (7200-17200)	1540 (890-1540)	7.48	6.76	99
24	Non Duct					22000					22000 (7200-22000)	1790 (810-1790)	8.69	7.86	99
06+06	Non Duct	Non Duct				6500	6500				13000 (12000-13000)	970 (930-970)	4.71	4.26	99
06+09	Non Duct	Non Duct				6200	9300				15500 (12000-15500)	1210 (930-1210)	5.88	5.31	99
06+09	Non Duct	Duct				6400	9100				15500 (12000-15500)	1270 (950-1270)	6.17	5.58	99
06+12	Non Duct	Non Duct				6200	12400				18600 (12000-18500)	1550 (930-1550)	7.53	6.81	99
06+12	Non Duct	Duct				6400	12200				18600 (12000-18500)	1610 (950-1610)	7.82	7.07	99
06+15	Non Duct	Non Duct				5900	14700				20600 (12000-20500)	1830 (930-1830)	8.89	8.04	99
06+15	Non Duct	Duct				6400	15200				21600 (12000-21500)	1950 (950-1950)	9.47	8.56	99
06+18	Non Duct	Non Duct				6000	17800				23800 (12000-23700)	2450 (930-2450)	11.90	10.76	99
06+18	Non Duct	Duct				6200	17600				23800 (12000-23700)	2470 (950-2470)	11.99	10.85	99
06+24	Non Duct	Non Duct				5200	20800				26000 (12000-26000)	2810 (930-2810)	13.65	12.34	99
09+09	Non Duct	Non Duct				9000	9000				18000 (12000-18000)	1490 (930-1490)	7.24	6.54	99
09+09	Non Duct	Duct				9200	8800				18000 (12000-18000)	1670 (950-1670)	8.11	7.33	99
09+09	Duct	Duct				8800	8800				17600 (12000-18000)	1850 (970-1850)	8.98	8.12	99
09+12	Non Duct	Non Duct				9000	12000				21000 (12000-21000)	1950 (930-1950)	9.47	8.56	99
09+12	Non Duct	Duct				9200	11800				21000 (12000-21000)	2000 (950-2000)	9.71	8.78	99
09+12	Duct	Non Duct				8800	12200				21000 (12000-21000)	2000 (950-2000)	9.71	8.78	99
09+12	Duct	Duct				8800	11800				20600 (12000-21000)	2050 (970-2050)	9.96	9.00	99
09+15	Non Duct	Non Duct				8700	14400				23100 (12000-23000)	2510 (930-2510)	12.19	11.02	99
09+15	Non Duct	Duct				9200	14800				24000 (12000-24000)	2530 (950-2530)	12.29	11.11	99
09+15	Duct	Non Duct				8500	14600				23100 (12000-23000)	2530 (950-2530)	12.29	11.11	99
09+15	Duct	Duct				8800	14800				23600 (12000-24000)	2550 (970-2550)	12.38	11.20	99
09+18	Non Duct	Non Duct				8700	17400				26100 (12000-26000)	2810 (930-2810)	13.65	12.34	99
09+18	Non Duct	Duct				8900	17200				26100 (12000-26000)	2830 (950-2830)	13.74	12.43	99
09+18	Duct	Non Duct				8500	17600				26100 (12000-26000)	2830 (950-2830)	13.74	12.43	99
09+18	Duct	Duct				8500	17200				25700 (12000-26000)	2850 (970-2850)	13.84	12.52	99
09+24	Non Duct	Non Duct				7700	20400				28100 (12000-28000)	3210 (930-3210)	15.59	14.10	99
09+24	Duct	Non Duct				7500	20600				28100 (12000-28000)	3230 (950-3230)	15.69	14.19	99
12+12	Non Duct	Non Duct				12000	12000				24000 (12000-24000)	2510 (930-2510)	12.19	11.02	99
12+12	Non Duct	Duct				12200	11800				24000 (12000-24000)	2530 (950-2530)	12.29	11.11	99
12+12	Duct	Duct				11800	11800				23600 (12000-24000)	2550 (970-2550)	12.38	11.20	99
12+15	Non Duct	Non Duct				11600	14500				26100 (12000-26000)	2810 (930-2810)	13.65	12.34	99
12+15	Non Duct	Duct				11800	14300				26100 (12000-26000)	2830 (950-2830)	13.74	12.43	99
12+15	Duct	Non Duct				11400	14700				26100 (12000-26000)	2830 (950-2830)	13.74	12.43	99
12+15	Duct	Duct				11400	14300				25700 (12000-26000)	2850 (970-2850)	13.84	12.52	99
12+18	Non Duct	Non Duct				10400	15600				26000 (12000-26000)	2810 (930-2810)	13.65	12.34	99
12+18	Non Duct	Duct				10600	15400				26000 (12000-26000)	2830 (950-2830)	13.74	12.43	99
12+18	Duct	Non Duct				10200	15800				26000 (12000-26000)	2830 (950-2830)	13.74	12.43	99
12+18	Duct	Duct				10200	15400				25600 (12000-26000)	2850 (970-2850)	13.84	12.52	99
12+24	Non Duct	Non Duct				9400	18700				28100 (12000-28000)	3210 (930-3210)	15.59	14.10	99
12+24	Duct	Non Duct				9200	18900				28100 (12000-28000)	3230 (950-3230)	15.69	14.19	99
15+15	Non Duct	Non Duct				13000	13000				26000 (12000-26000)	2810 (930-2810)	13.65	12.34	99

MXZ-5B42NA COOLING

Indoor units combination	Indoor type					Cooling Capacity (BTU/h)						Outdoor unit power consumption (W)	Current (A)	Current (A)	Power factor (%)
	Unit A	Unit B	Unit C	Unit D	Unit E	Unit A	Unit B	Unit C	Unit D	Unit E	Total		208V	230V	
15+15	Non Duct	Duct				13200	12800				26000 (12000-26000)	2830 (950-2830)	13.74	12.43	99
15+15	Duct	Duct				12800	12800				25600 (12000-26000)	2850 (970-2850)	13.84	12.52	99
15+18	Non Duct	Non Duct				11900	14200				26100 (12000-26000)	2810 (930-2810)	13.65	12.34	99
15+18	Non Duct	Duct				12100	14000				26100 (12000-26000)	2830 (950-2830)	13.74	12.43	99
15+18	Duct	Non Duct				11700	14400				26100 (12000-26000)	2830 (950-2830)	13.74	12.43	99
15+18	Duct	Duct				11700	14000				25700 (12000-26000)	2850 (970-2850)	13.84	12.52	99
15+24	Non Duct	Non Duct				10800	17300				28100 (12000-28000)	3210 (930-3210)	15.59	14.10	99
15+24	Duct	Non Duct				10600	17500				28100 (12000-28000)	3230 (950-3230)	15.69	14.19	99
18+18	Non Duct	Non Duct				13000	13000				26000 (12000-26000)	2810 (930-2810)	13.65	12.34	99
18+18	Non Duct	Duct				13200	12800				26000 (12000-26000)	2830 (950-2830)	13.74	12.43	99
18+18	Duct	Duct				12800	12800				25600 (12000-26000)	2850 (970-2850)	13.84	12.52	99
18+24	Non Duct	Non Duct				12000	16000				28000 (12000-28000)	3210 (930-3210)	15.59	14.10	99
18+24	Duct	Non Duct				11800	16200				28000 (12000-28000)	3230 (950-3230)	15.69	14.19	99
24+24	Non Duct	Non Duct				15000	15000				30000 (12000-30000)	3230 (930-3230)	15.69	14.19	99
06+06+06	Non Duct	Non Duct	Non Duct			6500	6500	6500			19500 (12600-19500)	1610 (1010-1610)	7.82	7.07	99
06+06+09	Non Duct	Non Duct	Non Duct			6300	6300	9500			22100 (12600-22000)	1770 (1010-1770)	8.60	7.77	99
06+06+09	Non Duct	Non Duct	Duct			6400	6400	9300			22100 (12600-22000)	1950 (1030-1950)	9.47	8.56	99
06+06+12	Non Duct	Non Duct	Non Duct			6300	6300	12500			25100 (12600-25000)	2240 (1010-2240)	10.88	9.84	99
06+06+12	Non Duct	Non Duct	Duct			6400	6400	12300			25100 (12600-25000)	2340 (1030-2340)	11.36	10.28	99
06+06+15	Non Duct	Non Duct	Non Duct			6000	6000	15000			27000 (12600-27000)	2540 (1010-2540)	12.33	11.16	99
06+06+15	Non Duct	Non Duct	Duct			6400	6400	15400			28200 (12600-28000)	2590 (1030-2590)	12.58	11.37	99
06+06+18	Non Duct	Non Duct	Non Duct			6100	6100	18200			30400 (12600-30200)	3110 (1010-3110)	15.10	13.66	99
06+06+18	Non Duct	Non Duct	Duct			6200	6200	18000			30400 (12600-30200)	3130 (1030-3130)	15.20	13.75	99
06+06+24	Non Duct	Non Duct	Non Duct			5400	5400	21400			32200 (12600-32100)	3510 (1010-3510)	17.05	15.42	99
06+09+09	Non Duct	Non Duct	Non Duct			6200	9200	9200			24600 (12600-24500)	2240 (1010-2240)	10.88	9.84	99
06+09+09	Non Duct	Non Duct	Duct			6300	9300	9000			24600 (12600-24500)	2270 (1030-2270)	11.02	9.97	99
06+09+09	Non Duct	Duct	Duct			6600	9000	9000			24600 (12600-24500)	2300 (1050-2300)	11.17	10.10	99
06+09+12	Non Duct	Non Duct	Non Duct			6200	9200	12300			27700 (12600-27500)	2650 (1010-2650)	12.87	11.64	99
06+09+12	Non Duct	Non Duct	Duct			6300	9300	12100			27700 (12600-27500)	2670 (1030-2670)	12.97	11.73	99
06+09+12	Non Duct	Duct	Non Duct			6300	9000	12400			27700 (12600-27500)	2680 (1030-2680)	13.01	11.77	99
06+09+12	Non Duct	Duct	Duct			6600	9000	12100			27700 (12600-27500)	2700 (1050-2700)	13.11	11.86	99
06+09+15	Non Duct	Non Duct	Non Duct			5900	8900	14800			29600 (12600-29500)	3000 (1010-3000)	14.57	13.18	99
06+09+15	Non Duct	Non Duct	Duct			6200	9300	15100			30600 (12600-30500)	3020 (1030-3020)	14.67	13.26	99
06+09+15	Non Duct	Duct	Non Duct			6000	8700	14900			29600 (12600-29500)	3030 (1030-3030)	14.71	13.31	99
06+09+15	Non Duct	Duct	Duct			6500	9000	15100			30600 (12600-30500)	3050 (1050-3050)	14.81	13.39	99
06+09+18	Non Duct	Non Duct	Non Duct			5900	8800	17600			32300 (12600-32100)	3510 (1010-3510)	17.05	15.42	99
06+09+18	Non Duct	Non Duct	Duct			6000	8900	17400			32300 (12600-32100)	3530 (1030-3530)	17.14	15.50	99
06+09+18	Non Duct	Duct	Non Duct			5900	8500	17400			31800 (12600-31700)	3540 (1030-3540)	17.19	15.55	99
06+09+18	Non Duct	Duct	Duct			6200	8500	17100			31800 (12600-31700)	3560 (1050-3560)	17.29	15.63	99
06+09+24	Non Duct	Non Duct	Non Duct			5000	7500	19800			32300 (12600-32100)	3510 (1010-3510)	17.05	15.42	99
06+09+24	Non Duct	Duct	Non Duct			5000	7200	19700			31900 (12600-31700)	3540 (1030-3540)	17.19	15.55	99
06+12+12	Non Duct	Non Duct	Non Duct			6100	12200	12200			30500 (12600-30500)	3160 (1010-3160)	15.35	13.88	99
06+12+12	Non Duct	Non Duct	Duct			6200	12300	12000			30500 (12600-30500)	3180 (1030-3180)	15.44	13.97	99
06+12+12	Non Duct	Duct	Duct			6500	12000	12000			30500 (12600-30500)	3200 (1050-3200)	15.54	14.05	99
06+12+15	Non Duct	Non Duct	Non Duct			5900	11700	14600			32200 (12600-32100)	3510 (1010-3510)	17.05	15.42	99
06+12+15	Non Duct	Non Duct	Duct			6000	11800	14400			32200 (12600-32100)	3530 (1030-3530)	17.14	15.50	99
06+12+15	Non Duct	Duct	Non Duct			6000	11500	14700			32200 (12600-32100)	3530 (1030-3530)	17.14	15.50	99
06+12+15	Non Duct	Duct	Duct			6300	11500	14400			32200 (12600-32100)	3550 (1050-3550)	17.24	15.59	99
06+12+18	Non Duct	Non Duct	Non Duct			5400	10700	16100			32200 (12600-32100)	3510 (1010-3510)	17.05	15.42	99
06+12+18	Non Duct	Non Duct	Duct			5500	10800	15900			32200 (12600-32100)	3530 (1030-3530)	17.14	15.50	99
06+12+18	Non Duct	Duct	Non Duct			5500	10500	16200			32200 (12600-32100)	3530 (1030-3530)	17.14	15.50	99

MXZ-5B42NA COOLING

Indoor units combination	Indoor type					Cooling Capacity (BTU/h)						Outdoor unit power consumption (W)	Current (A)	Current (A)	Power factor (%)
	Unit A	Unit B	Unit C	Unit D	Unit E	Unit A	Unit B	Unit C	Unit D	Unit E	Total		208V	230V	
06+12+18	Non Duct	Duct	Duct			5800	10500	15900			32200 (12600-32100)	3550 (1050-3550)	17.24	15.59	99
06+12+24	Non Duct	Non Duct	Non Duct			4600	9200	18400			32200 (12600-32100)	3510 (1010-3510)	17.05	15.42	99
06+12+24	Non Duct	Duct	Non Duct			4700	9000	18500			32200 (12600-32100)	3530 (1030-3530)	17.14	15.50	99
06+15+15	Non Duct	Non Duct	Non Duct			5400	13400	13400			32200 (12600-32100)	3510 (1010-3510)	17.05	15.42	99
06+15+15	Non Duct	Non Duct	Duct			5500	13500	13200			32200 (12600-32100)	3530 (1030-3530)	17.14	15.50	99
06+15+15	Non Duct	Duct	Duct			5800	13200	13200			32200 (12600-32100)	3550 (1050-3550)	17.24	15.59	99
06+15+18	Non Duct	Non Duct	Non Duct			5000	12400	14900			32300 (12600-32100)	3510 (1010-3510)	17.05	15.42	99
06+15+18	Non Duct	Non Duct	Duct			5100	12500	14700			32300 (12600-32100)	3530 (1030-3530)	17.14	15.50	99
06+15+18	Non Duct	Duct	Non Duct			5100	12200	15000			32300 (12600-32100)	3530 (1030-3530)	17.14	15.50	99
06+15+18	Non Duct	Duct	Duct			5400	12200	14700			32300 (12600-32100)	3550 (1050-3550)	17.24	15.59	99
06+15+24	Non Duct	Non Duct	Non Duct			4300	10700	17200			32200 (12600-32100)	3510 (1010-3510)	17.05	15.42	99
06+15+24	Non Duct	Duct	Non Duct			4400	10500	17300			32200 (12600-32100)	3530 (1030-3530)	17.14	15.50	99
06+18+18	Non Duct	Non Duct	Non Duct			4600	13800	13800			32200 (12600-32100)	3510 (1010-3510)	17.05	15.42	99
06+18+18	Non Duct	Non Duct	Duct			4700	13900	13600			32200 (12600-32100)	3530 (1030-3530)	17.14	15.50	99
06+18+18	Non Duct	Duct	Duct			5000	13600	13600			32200 (12600-32100)	3550 (1050-3550)	17.24	15.59	99
06+18+24	Non Duct	Non Duct	Non Duct			4100	12100	16100			32300 (12600-32100)	3510 (1010-3510)	17.05	15.42	99
06+18+24	Non Duct	Duct	Non Duct			4200	11900	16200			32300 (12600-32100)	3530 (1030-3530)	17.14	15.50	99
09+09+09	Non Duct	Non Duct	Non Duct			9000	9000	9000			27000 (12600-27000)	2540 (1010-2540)	12.33	11.16	99
09+09+09	Non Duct	Non Duct	Duct			9000	9000	8700			26700 (12600-26600)	2680 (1030-2680)	13.01	11.77	99
09+09+09	Non Duct	Duct	Duct			9200	8600	8600			26400 (12600-26200)	2820 (1050-2820)	13.69	12.38	99
09+09+09	Duct	Duct	Duct			8400	8400	8400			25200 (12600-25800)	2960 (1070-2960)	14.37	13.00	99
09+09+12	Non Duct	Non Duct	Non Duct			9000	9000	12000			30000 (12600-30000)	3280 (1010-3280)	15.93	14.40	99
09+09+12	Non Duct	Non Duct	Duct			9100	9100	11800			30000 (12600-30000)	3300 (1030-3300)	16.03	14.49	99
09+09+12	Non Duct	Duct	Non Duct			9000	8700	12000			29700 (12600-29600)	3310 (1030-3310)	16.07	14.54	99
09+09+12	Non Duct	Duct	Duct			9300	8700	11700			29700 (12600-29600)	3330 (1050-3330)	16.17	14.62	99
09+09+12	Duct	Duct	Non Duct			8600	8600	12100			29300 (12600-29200)	3340 (1050-3340)	16.22	14.67	99
09+09+12	Duct	Duct	Duct			8600	8600	11500			28700 (12600-29200)	3360 (1070-3360)	16.32	14.76	99
09+09+15	Non Duct	Non Duct	Non Duct			8800	8800	14600			32200 (12600-32000)	3510 (1010-3510)	17.05	15.42	99
09+09+15	Non Duct	Non Duct	Duct			8900	8900	14400			32200 (12600-32100)	3530 (1030-3530)	17.14	15.50	99
09+09+15	Non Duct	Duct	Non Duct			8800	8500	14600			31900 (12600-31700)	3540 (1030-3540)	17.19	15.55	99
09+09+15	Non Duct	Duct	Duct			9100	8500	14300			31900 (12600-31700)	3560 (1050-3560)	17.29	15.63	99
09+09+15	Duct	Duct	Non Duct			8400	8400	14700			31500 (12600-31300)	3570 (1050-3570)	17.34	15.68	99
09+09+15	Duct	Duct	Duct			8400	8400	14100			30900 (12600-31300)	3590 (1070-3590)	17.43	15.77	99
09+09+18	Non Duct	Non Duct	Non Duct			8100	8100	16100			32300 (12600-32100)	3510 (1010-3510)	17.05	15.42	99
09+09+18	Non Duct	Non Duct	Duct			8200	8200	15900			32300 (12600-32100)	3530 (1030-3530)	17.14	15.50	99
09+09+18	Non Duct	Duct	Non Duct			8100	7800	16000			31900 (12600-31700)	3540 (1030-3540)	17.19	15.55	99
09+09+18	Non Duct	Duct	Duct			8400	7800	15700			31900 (12600-31700)	3560 (1050-3560)	17.29	15.63	99
09+09+18	Duct	Duct	Non Duct			7700	7700	16100			31500 (12600-31300)	3570 (1050-3570)	17.34	15.68	99
09+09+18	Duct	Duct	Duct			7700	7700	15500			30900 (12600-31300)	3590 (1070-3590)	17.43	15.77	99
09+09+24	Non Duct	Non Duct	Non Duct			6900	6900	18400			32200 (12600-32100)	3510 (1010-3510)	17.05	15.42	99
09+09+24	Non Duct	Duct	Non Duct			6900	6600	18300			31800 (12600-31700)	3530 (1030-3530)	17.14	15.50	99
09+09+24	Duct	Duct	Non Duct			6600	6600	18300			31500 (12600-31300)	3550 (1050-3550)	17.24	15.59	99
09+12+12	Non Duct	Non Duct	Non Duct			8800	11700	11700			32200 (12600-32100)	3510 (1010-3510)	17.05	15.42	99
09+12+12	Non Duct	Non Duct	Duct			8900	11800	11500			32200 (12600-32100)	3530 (1030-3530)	17.14	15.50	99
09+12+12	Non Duct	Duct	Duct			9200	11500	11500			32200 (12600-32100)	3550 (1050-3550)	17.24	15.59	99
09+12+12	Duct	Non Duct	Non Duct			8500	11700	11700			31900 (12600-31700)	3540 (1030-3540)	17.19	15.55	99
09+12+12	Duct	Non Duct	Duct			8500	12000	11400			31900 (12600-31700)	3560 (1050-3560)	17.29	15.63	99
09+12+12	Duct	Duct	Duct			8500	11400	11400			31300 (12600-31700)	3580 (1070-3580)	17.39	15.72	99
09+12+15	Non Duct	Non Duct	Non Duct			8100	10700	13400			32200 (12600-32100)	3510 (1010-3510)	17.05	15.42	99
09+12+15	Non Duct	Non Duct	Duct			8200	10800	13200			32200 (12600-32100)	3530 (1030-3530)	17.14	15.50	99
09+12+15	Non Duct	Duct	Non Duct			8200	10500	13500			32200 (12600-32100)	3530 (1030-3530)	17.14	15.50	99

MXZ-5B42NA COOLING

Indoor units combination	Indoor type					Cooling Capacity (BTU/h)						Outdoor unit power consumption (W)	Current (A)	Current (A)	Power factor (%)
	Unit A	Unit B	Unit C	Unit D	Unit E	Unit A	Unit B	Unit C	Unit D	Unit E	Total		208V	230V	
09+12+15	Non Duct	Duct	Duct			8500	10500	13200			32200 (12600-32100)	3550 (1050-3550)	17.24	15.59	99
09+12+15	Duct	Non Duct	Non Duct			7800	10700	13400			31900 (12600-31700)	3540 (1030-3540)	17.19	15.55	99
09+12+15	Duct	Non Duct	Duct			7800	11000	13100			31900 (12600-31700)	3560 (1050-3560)	17.29	15.63	99
09+12+15	Duct	Duct	Non Duct			7800	10400	13700			31900 (12600-31700)	3560 (1050-3560)	17.29	15.63	99
09+12+15	Duct	Duct	Duct			7800	10400	13100			31300 (12600-31700)	3580 (1070-3580)	17.39	15.72	99
09+12+18	Non Duct	Non Duct	Non Duct			7500	9900	14900			32300 (12600-32100)	3510 (1010-3510)	17.05	15.42	99
09+12+18	Non Duct	Non Duct	Duct			7600	10000	14700			32300 (12600-32100)	3530 (1030-3530)	17.14	15.50	99
09+12+18	Non Duct	Duct	Non Duct			7600	9700	15000			32300 (12600-32100)	3530 (1030-3530)	17.14	15.50	99
09+12+18	Non Duct	Duct	Duct			7900	9700	14700			32300 (12600-32100)	3550 (1050-3550)	17.24	15.59	99
09+12+18	Duct	Non Duct	Non Duct			7200	9900	14800			31900 (12600-31700)	3540 (1030-3540)	17.19	15.55	99
09+12+18	Duct	Non Duct	Duct			7200	10200	14500			31900 (12600-31700)	3560 (1050-3560)	17.29	15.63	99
09+12+18	Duct	Duct	Non Duct			7200	9600	15100			31900 (12600-31700)	3540 (1050-3540)	17.19	15.55	99
09+12+18	Duct	Duct	Duct			7200	9600	14500			31300 (12600-31700)	3580 (1070-3580)	17.39	15.72	99
09+12+24	Non Duct	Non Duct	Non Duct			6500	8600	17200			32300 (12600-32100)	3510 (1010-3510)	17.05	15.42	99
09+12+24	Non Duct	Duct	Non Duct			6500	8300	17100			31900 (12600-31700)	3530 (1030-3530)	17.14	15.50	99
09+12+24	Duct	Non Duct	Non Duct			6200	8600	17100			31900 (12600-31700)	3530 (1030-3530)	17.14	15.50	99
09+12+24	Duct	Duct	Non Duct			6100	8200	17100			31400 (12600-31300)	3550 (1050-3550)	17.24	15.59	99
09+15+15	Non Duct	Non Duct	Non Duct			7500	12400	12400			32300 (12600-32100)	3510 (1010-3510)	17.05	15.42	99
09+15+15	Non Duct	Non Duct	Duct			7600	12500	12200			32300 (12600-32100)	3530 (1030-3530)	17.14	15.50	99
09+15+15	Non Duct	Duct	Duct			7900	12200	12200			32300 (12600-32100)	3550 (1050-3550)	17.24	15.59	99
09+15+15	Duct	Non Duct	Non Duct			7200	12300	12300			31800 (12600-31700)	3540 (1030-3540)	17.19	15.55	99
09+15+15	Duct	Non Duct	Duct			7200	12600	12000			31800 (12600-31700)	3560 (1050-3560)	17.29	15.63	99
09+15+15	Duct	Duct	Duct			7200	12000	12000			31200 (12600-31700)	3580 (1070-3580)	17.39	15.72	99
09+15+18	Non Duct	Non Duct	Non Duct			6900	11500	13800			32200 (12600-32100)	3510 (1010-3510)	17.05	15.42	99
09+15+18	Non Duct	Non Duct	Duct			7000	11600	13600			32200 (12600-32100)	3530 (1030-3530)	17.14	15.50	99
09+15+18	Non Duct	Duct	Non Duct			7000	11300	13900			32200 (12600-32100)	3530 (1030-3530)	17.14	15.50	99
09+15+18	Non Duct	Duct	Duct			7300	11300	13600			32200 (12600-32100)	3550 (1050-3550)	17.24	15.59	99
09+15+18	Duct	Non Duct	Non Duct			6600	11500	13700			31800 (12600-31700)	3540 (1030-3540)	17.19	15.55	99
09+15+18	Duct	Non Duct	Duct			6600	11800	13400			31800 (12600-31700)	3560 (1050-3560)	17.29	15.63	99
09+15+18	Duct	Duct	Non Duct			6600	11200	14000			31800 (12600-31700)	3560 (1050-3560)	17.29	15.63	99
09+15+18	Duct	Duct	Duct			6600	11200	13400			31200 (12600-31700)	3580 (1070-3580)	17.39	15.72	99
09+15+24	Non Duct	Non Duct	Non Duct			6100	10100	16100			32300 (12600-32100)	3510 (1010-3510)	17.05	15.42	99
09+15+24	Non Duct	Duct	Non Duct			6100	9800	16000			31900 (12600-31700)	3530 (1030-3530)	17.14	15.50	99
09+15+24	Duct	Non Duct	Non Duct			5800	10100	16000			31900 (12600-31700)	3530 (1030-3530)	17.14	15.50	99
09+15+24	Duct	Duct	Non Duct			5700	9600	16100			31400 (12600-31300)	3550 (1050-3550)	17.24	15.59	99
09+18+18	Non Duct	Non Duct	Non Duct			6500	12900	12900			32300 (12600-32100)	3510 (1010-3510)	17.05	15.42	99
09+18+18	Non Duct	Non Duct	Duct			6600	13000	12700			32300 (12600-32100)	3530 (1030-3530)	17.14	15.50	99
09+18+18	Non Duct	Duct	Duct			6900	12700	12700			32300 (12600-32100)	3550 (1050-3550)	17.24	15.59	99
09+18+18	Duct	Non Duct	Non Duct			6200	12800	12800			31800 (12600-31700)	3530 (1030-3530)	17.14	15.50	99
09+18+18	Duct	Non Duct	Duct			6200	13100	12500			31800 (12600-31700)	3560 (1050-3560)	17.29	15.63	99
09+18+18	Duct	Duct	Duct			6200	12500	12500			31200 (12600-31700)	3580 (1070-3580)	17.39	15.72	99
09+18+24	Non Duct	Non Duct	Non Duct			5700	11400	15200			32300 (12600-32100)	3510 (1010-3510)	17.05	15.42	99
09+18+24	Non Duct	Duct	Non Duct			5700	11000	15100			31800 (12600-31700)	3530 (1030-3530)	17.14	15.50	99
09+18+24	Duct	Non Duct	Non Duct			5400	11300	15100			31800 (12600-31700)	3530 (1030-3530)	17.14	15.50	99
09+18+24	Duct	Duct	Non Duct			5400	10900	15200			31500 (12600-31300)	3550 (1050-3550)	17.24	15.59	99
12+12+12	Non Duct	Non Duct	Non Duct			10700	10700	10700			32100 (12600-32100)	3510 (1010-3510)	17.05	15.42	99
12+12+12	Non Duct	Non Duct	Duct			10800	10800	10500			32100 (12600-32100)	3530 (1030-3530)	17.14	15.50	99
12+12+12	Non Duct	Duct	Duct			11100	10500	10500			32100 (12600-32100)	3550 (1050-3550)	17.24	15.59	99
12+12+12	Duct	Duct	Duct			10500	10500	10500			31500 (12600-32100)	3570 (1070-3570)	17.34	15.68	99
12+12+15	Non Duct	Non Duct	Non Duct			9900	9900	12400			32200 (12600-32100)	3510 (1010-3510)	17.05	15.42	99
12+12+15	Non Duct	Non Duct	Duct			10000	10000	12200			32200 (12600-32100)	3530 (1030-3530)	17.14	15.50	99

MXZ-5B42NA COOLING

Indoor units combination	Indoor type					Cooling Capacity (BTU/h)						Outdoor unit power consumption (W)	Current (A)	Current (A)	Power factor (%)
	Unit A	Unit B	Unit C	Unit D	Unit E	Unit A	Unit B	Unit C	Unit D	Unit E	Total		208V	230V	
12+12+15	Non Duct	Duct	Non Duct			10000	9700	12500			32200 (12600-32100)	3530 (1030-3530)	17.14	15.50	99
12+12+15	Non Duct	Duct	Duct			10300	9700	12200			32200 (12600-32100)	3550 (1050-3550)	17.24	15.59	99
12+12+15	Duct	Duct	Non Duct			9700	9700	12800			32200 (12600-32100)	3550 (1050-3550)	17.24	15.59	99
12+12+15	Duct	Duct	Duct			9700	9700	12200			31600 (12600-32100)	3570 (1070-3570)	17.34	15.68	99
12+12+18	Non Duct	Non Duct	Non Duct			9200	9200	13800			32200 (12600-32100)	3510 (1010-3510)	17.05	15.42	99
12+12+18	Non Duct	Non Duct	Duct			9300	9300	13600			32200 (12600-32100)	3530 (1030-3530)	17.14	15.50	99
12+12+18	Non Duct	Duct	Non Duct			9300	9000	13900			32200 (12600-32100)	3530 (1030-3530)	17.14	15.50	99
12+12+18	Non Duct	Duct	Duct			9600	9000	13600			32200 (12600-32100)	3550 (1050-3550)	17.24	15.59	99
12+12+18	Duct	Duct	Non Duct			9000	9000	14200			32200 (12600-32100)	3550 (1050-3550)	17.24	15.59	99
12+12+18	Duct	Duct	Duct			9000	9000	13600			31600 (12600-32100)	3570 (1070-3570)	17.34	15.68	99
12+12+24	Non Duct	Non Duct	Non Duct			8100	8100	16100			32300 (12600-32100)	3510 (1010-3510)	17.05	15.42	99
12+12+24	Non Duct	Duct	Non Duct			8200	7900	16200			32300 (12600-32100)	3530 (1030-3530)	17.14	15.50	99
12+12+24	Duct	Duct	Non Duct			7900	7900	16500			32300 (12600-32100)	3550 (1050-3550)	17.24	15.59	99
12+15+15	Non Duct	Non Duct	Non Duct			9200	11500	11500			32200 (12600-32100)	3510 (1010-3510)	17.05	15.42	99
12+15+15	Non Duct	Non Duct	Duct			9300	11600	11300			32200 (12600-32100)	3530 (1030-3530)	17.14	15.50	99
12+15+15	Non Duct	Duct	Duct			9600	11300	11300			32200 (12600-32100)	3550 (1050-3550)	17.24	15.59	99
12+15+15	Duct	Non Duct	Non Duct			9000	11600	11600			32200 (12600-32100)	3530 (1030-3530)	17.14	15.50	99
12+15+15	Duct	Non Duct	Duct			9000	11900	11300			32200 (12600-32100)	3550 (1050-3550)	17.24	15.59	99
12+15+15	Duct	Duct	Duct			9000	11300	11300			31600 (12600-32100)	3570 (1070-3570)	17.34	15.68	99
12+15+18	Non Duct	Non Duct	Non Duct			8600	10700	12900			32200 (12600-32100)	3510 (1010-3510)	17.05	15.42	99
12+15+18	Non Duct	Non Duct	Duct			8700	10800	12700			32200 (12600-32100)	3530 (1030-3530)	17.14	15.50	99
12+15+18	Non Duct	Duct	Non Duct			8700	10500	13000			32200 (12600-32100)	3530 (1030-3530)	17.14	15.50	99
12+15+18	Non Duct	Duct	Duct			9000	10500	12700			32200 (12600-32100)	3550 (1050-3550)	17.24	15.59	99
12+15+18	Duct	Non Duct	Non Duct			8400	10800	13000			32200 (12600-32100)	3530 (1030-3530)	17.14	15.50	99
12+15+18	Duct	Non Duct	Duct			8400	11100	12700			32200 (12600-32100)	3550 (1050-3550)	17.24	15.59	99
12+15+18	Duct	Duct	Non Duct			8400	10500	13300			32200 (12600-32100)	3550 (1050-3550)	17.24	15.59	99
12+15+18	Duct	Duct	Duct			8400	10500	12700			31600 (12600-32100)	3570 (1070-3570)	17.34	15.68	99
12+15+24	Non Duct	Non Duct	Non Duct			7600	9500	15200			32300 (12600-32100)	3510 (1010-3510)	17.05	15.42	99
12+15+24	Non Duct	Duct	Non Duct			7700	9300	15300			32300 (12600-32100)	3530 (1030-3530)	17.14	15.50	99
12+15+24	Duct	Non Duct	Non Duct			7400	9600	15300			32300 (12600-32100)	3530 (1030-3530)	17.14	15.50	99
12+15+24	Duct	Duct	Non Duct			7400	9300	15600			32300 (12600-32100)	3550 (1050-3550)	17.24	15.59	99
12+18+18	Non Duct	Non Duct	Non Duct			8100	12100	12100			32300 (12600-32100)	3510 (1010-3510)	17.05	15.42	99
12+18+18	Non Duct	Non Duct	Duct			8200	12200	11900			32300 (12600-32100)	3530 (1030-3530)	17.14	15.50	99
12+18+18	Non Duct	Duct	Duct			8500	11900	11900			32300 (12600-32100)	3550 (1050-3550)	17.24	15.59	99
12+18+18	Duct	Non Duct	Non Duct			7900	12200	12200			32300 (12600-32100)	3530 (1030-3530)	17.14	15.50	99
12+18+18	Duct	Non Duct	Duct			7900	12500	11900			32300 (12600-32100)	3550 (1050-3550)	17.24	15.59	99
12+18+18	Duct	Duct	Duct			7900	11900	11900			31700 (12600-32100)	3570 (1070-3570)	17.34	15.68	99
15+15+15	Non Duct	Non Duct	Non Duct			10700	10700	10700			32100 (12600-32100)	3510 (1010-3510)	17.05	15.42	99
15+15+15	Non Duct	Non Duct	Duct			10800	10800	10500			32100 (12600-32100)	3530 (1030-3530)	17.14	15.50	99
15+15+15	Non Duct	Duct	Duct			11100	10500	10500			32100 (12600-32100)	3550 (1050-3550)	17.24	15.59	99
15+15+15	Duct	Duct	Duct			10500	10500	10500			31500 (12600-32100)	3570 (1070-3570)	17.34	15.68	99
15+15+18	Non Duct	Non Duct	Non Duct			10100	10100	12100			32300 (12600-32100)	3510 (1010-3510)	17.05	15.42	99
15+15+18	Non Duct	Non Duct	Duct			10200	10200	11900			32300 (12600-32100)	3530 (1030-3530)	17.14	15.50	99
15+15+18	Non Duct	Duct	Non Duct			10200	9900	12200			32300 (12600-32100)	3530 (1030-3530)	17.14	15.50	99
15+15+18	Non Duct	Duct	Duct			10500	9900	11900			32300 (12600-32100)	3550 (1050-3550)	17.24	15.59	99
15+15+18	Duct	Duct	Non Duct			9900	9900	12500			32300 (12600-32100)	3550 (1050-3550)	17.24	15.59	99
15+15+18	Duct	Duct	Duct			9900	9900	11900			31700 (12600-32100)	3570 (1070-3570)	17.34	15.68	99
15+18+18	Non Duct	Non Duct	Non Duct			9500	11400	11400			32300 (12600-32100)	3510 (1010-3510)	17.05	15.42	99
15+18+18	Non Duct	Non Duct	Duct			9600	11500	11200			32300 (12600-32100)	3530 (1030-3530)	17.14	15.50	99
15+18+18	Non Duct	Duct	Duct			9900	11200	11200			32300 (12600-32100)	3550 (1050-3550)	17.24	15.59	99
15+18+18	Duct	Non Duct	Non Duct			9300	11500	11500			32300 (12600-32100)	3530 (1030-3530)	17.14	15.50	99

MXZ-5B42NA COOLING

Indoor units combination	Indoor type					Cooling Capacity (BTU/h)						Outdoor unit power consumption (W)	Current (A)	Current (A)	Power factor (%)
	Unit A	Unit B	Unit C	Unit D	Unit E	Unit A	Unit B	Unit C	Unit D	Unit E	Total		208V	230V	
15+18+18	Duct	Non Duct	Duct			9300	11800	11200			32300 (12600-32100)	3550 (1050-3550)	17.24	15.59	99
15+18+18	Duct	Duct	Duct			9300	11200	11200			31700 (12600-32100)	3570 (1070-3570)	17.34	15.68	99
06+06+06+06	Non Duct	Non Duct	Non Duct	Non Duct		6500	6500	6500	6500		26000 (12600-26000)	2090 (1010-2090)	10.15	9.18	99
06+06+06+09	Non Duct	Non Duct	Non Duct	Non Duct		6400	6400	6400	9500		28700 (12600-28500)	2400 (1010-2400)	11.66	10.54	99
06+06+06+09	Non Duct	Non Duct	Non Duct	Duct		6400	6400	6400	9300		28500 (12600-28500)	2430 (1030-2430)	11.80	10.67	99
06+06+06+12	Non Duct	Non Duct	Non Duct	Non Duct		6300	6300	6300	12600		31500 (12600-31500)	2880 (1010-2880)	13.99	12.65	99
06+06+06+12	Non Duct	Non Duct	Non Duct	Duct		6400	6400	6400	12400		31600 (12600-31500)	2900 (1030-2900)	14.08	12.74	99
06+06+06+15	Non Duct	Non Duct	Non Duct	Non Duct		6100	6100	6100	15300		33600 (12600-33500)	3220 (1010-3220)	15.64	14.14	99
06+06+06+15	Non Duct	Non Duct	Non Duct	Duct		6400	6400	6400	15500		34700 (12600-34500)	3240 (1030-3240)	15.73	14.23	99
06+06+06+18	Non Duct	Non Duct	Non Duct	Non Duct		5600	5600	5600	16800		33600 (12600-33500)	3220 (1010-3220)	15.64	14.14	99
06+06+06+18	Non Duct	Non Duct	Non Duct	Duct		5900	5900	5900	17100		34800 (12600-34500)	3240 (1030-3240)	15.73	14.23	99
06+06+06+24	Non Duct	Non Duct	Non Duct	Non Duct		4800	4800	4800	19200		33600 (12600-33500)	3220 (1010-3220)	15.64	14.14	99
06+06+09+09	Non Duct	Non Duct	Non Duct	Non Duct		6200	6200	9300	9300		31000 (12600-31000)	2800 (1010-2800)	13.60	12.30	99
06+06+09+09	Non Duct	Non Duct	Non Duct	Duct		6300	6300	9400	9100		31100 (12600-31000)	2830 (1030-2830)	13.74	12.43	99
06+06+09+09	Non Duct	Non Duct	Duct	Duct		6400	6400	9100	9100		31000 (12600-31000)	2860 (1050-2860)	13.89	12.56	99
06+06+09+12	Non Duct	Non Duct	Non Duct	Non Duct		6200	6200	9300	12400		34100 (12600-34000)	3300 (1010-3300)	16.03	14.49	99
06+06+09+12	Non Duct	Non Duct	Non Duct	Duct		6300	6300	9400	12200		34200 (12600-34000)	3320 (1030-3320)	16.12	14.58	99
06+06+09+12	Non Duct	Non Duct	Duct	Non Duct		6300	6300	9100	12500		34200 (12600-34000)	3330 (1030-3330)	16.17	14.62	99
06+06+09+12	Non Duct	Non Duct	Duct	Duct		6400	6400	9100	12200		34100 (12600-34000)	3350 (1050-3350)	16.27	14.71	99
06+06+09+15	Non Duct	Non Duct	Non Duct	Non Duct		5900	5900	8900	14800		35500 (12600-35400)	3770 (1010-3770)	18.31	16.56	99
06+06+09+15	Non Duct	Non Duct	Non Duct	Duct		6000	6000	8900	14500		35400 (12600-35200)	3790 (1030-3790)	18.41	16.64	99
06+06+09+15	Non Duct	Non Duct	Duct	Non Duct		6000	6000	8600	14800		35400 (12600-35200)	3810 (1030-3810)	18.50	16.73	99
06+06+09+15	Non Duct	Non Duct	Duct	Duct		6100	6100	8600	14400		35200 (12600-35000)	3830 (1050-3830)	18.60	16.82	99
06+06+09+18	Non Duct	Non Duct	Non Duct	Non Duct		5600	5600	8400	16700		36300 (12600-36000)	3830 (1010-3830)	18.60	16.82	99
06+06+09+18	Non Duct	Non Duct	Non Duct	Duct		5600	5600	8400	16400		36000 (12600-35800)	3850 (1030-3850)	18.70	16.91	99
06+06+09+18	Non Duct	Non Duct	Duct	Non Duct		5600	5600	8100	16600		35900 (12600-35800)	3850 (1030-3850)	18.70	16.91	99
06+06+09+18	Non Duct	Non Duct	Duct	Duct		5700	5700	8100	16300		35800 (12600-35600)	3870 (1050-3870)	18.79	17.00	99
06+06+09+24	Non Duct	Non Duct	Non Duct	Non Duct		5100	5100	7600	20300		38100 (12600-38000)	3830 (1010-3830)	18.60	16.82	99
06+06+09+24	Non Duct	Non Duct	Duct	Non Duct		5200	5200	7400	20400		38200 (12600-38000)	3850 (1030-3850)	18.70	16.91	99
06+06+12+12	Non Duct	Non Duct	Non Duct	Non Duct		5900	5900	11800	11800		35400 (12600-35400)	3770 (1010-3770)	18.31	16.56	99
06+06+12+12	Non Duct	Non Duct	Non Duct	Duct		6000	6000	11800	11600		35400 (12600-35200)	3790 (1030-3790)	18.41	16.64	99
06+06+12+12	Non Duct	Non Duct	Duct	Duct		6100	6100	11500	11500		35200 (12600-35000)	3810 (1050-3810)	18.50	16.73	99
06+06+12+15	Non Duct	Non Duct	Non Duct	Non Duct		5600	5600	11100	13900		36200 (12600-36000)	3830 (1010-3830)	18.60	16.82	99
06+06+12+15	Non Duct	Non Duct	Non Duct	Duct		5600	5600	11100	13600		35900 (12600-35800)	3850 (1030-3850)	18.70	16.91	99
06+06+12+15	Non Duct	Non Duct	Duct	Non Duct		5600	5600	10900	13900		36000 (12600-35800)	3850 (1030-3850)	18.70	16.91	99
06+06+12+15	Non Duct	Non Duct	Duct	Duct		5700	5700	10800	13500		35700 (12600-35600)	3870 (1050-3870)	18.79	17.00	99
06+06+12+18	Non Duct	Non Duct	Non Duct	Non Duct		5200	5200	10300	15500		36200 (12600-36000)	3830 (1010-3830)	18.60	16.82	99
06+06+12+18	Non Duct	Non Duct	Non Duct	Duct		5200	5200	10300	15200		35900 (12600-35800)	3850 (1030-3850)	18.70	16.91	99
06+06+12+18	Non Duct	Non Duct	Duct	Non Duct		5200	5200	10100	15500		36000 (12600-35800)	3850 (1030-3850)	18.70	16.91	99
06+06+12+18	Non Duct	Non Duct	Duct	Duct		5300	5300	10000	15100		35700 (12600-35600)	3870 (1050-3870)	18.79	17.00	99
06+06+12+24	Non Duct	Non Duct	Non Duct	Non Duct		4800	4800	9500	19000		38100 (12600-38000)	3830 (1010-3830)	18.60	16.82	99
06+06+12+24	Non Duct	Non Duct	Duct	Non Duct		4900	4900	9300	19100		38200 (12600-38000)	3850 (1030-3850)	18.70	16.91	99
06+06+15+15	Non Duct	Non Duct	Non Duct	Non Duct		5200	5200	12900	12900		36200 (12600-36000)	3830 (1010-3830)	18.60	16.82	99
06+06+15+15	Non Duct	Non Duct	Non Duct	Duct		5200	5200	12900	12600		35900 (12600-35800)	3850 (1030-3850)	18.70	16.91	99
06+06+15+15	Non Duct	Non Duct	Duct	Duct		5300	5300	12600	12600		35800 (12600-35600)	3870 (1050-3870)	18.79	17.00	99
06+06+15+18	Non Duct	Non Duct	Non Duct	Non Duct		4800	4800	12000	14400		36000 (12600-36000)	3830 (1010-3830)	18.60	16.82	99
06+06+15+18	Non Duct	Non Duct	Non Duct	Duct		4900	4900	12000	14200		36000 (12600-35800)	3850 (1030-3850)	18.70	16.91	99
06+06+15+18	Non Duct	Non Duct	Duct	Non Duct		4900	4900	11800	14400		36000 (12600-35800)	3850 (1030-3850)	18.70	16.91	99
06+06+15+18	Non Duct	Non Duct	Duct	Duct		5000	5000	11700	14100		35800 (12600-35600)	3870 (1050-3870)	18.79	17.00	99
06+06+15+24	Non Duct	Non Duct	Non Duct	Non Duct		4500	4500	11200	17900		38100 (12600-38000)	3830 (1010-3830)	18.60	16.82	99
06+06+15+24	Non Duct	Non Duct	Duct	Non Duct		4600	4600	11000	18000		38200 (12600-38000)	3850 (1030-3850)	18.70	16.91	99

MXZ-5B42NA COOLING

Indoor units combination	Indoor type					Cooling Capacity (BTU/h)						Outdoor unit power consumption (W)	Current (A)	Current (A)	Power factor (%)
	Unit A	Unit B	Unit C	Unit D	Unit E	Unit A	Unit B	Unit C	Unit D	Unit E	Total		208V	230V	
06+06+18+18	Non Duct	Non Duct	Non Duct	Non Duct		4500	4500	13500	13500		36000 (12600-36000)	3830 (1010-3830)	18.60	16.82	99
06+06+18+18	Non Duct	Non Duct	Non Duct	Duct		4600	4600	13500	13300		36000 (12600-35800)	3850 (1030-3850)	18.70	16.91	99
06+06+18+18	Non Duct	Non Duct	Duct	Duct		4700	4700	13200	13200		35800 (12600-35600)	3870 (1050-3870)	18.79	17.00	99
06+09+09+09	Non Duct	Non Duct	Non Duct	Non Duct		6100	9200	9200	9200		33700 (12600-33500)	3220 (1010-3220)	15.64	14.14	99
06+09+09+09	Non Duct	Non Duct	Non Duct	Duct		6200	9300	9300	9000		33800 (12600-33500)	3250 (1030-3250)	15.78	14.27	99
06+09+09+09	Non Duct	Non Duct	Duct	Duct		6300	9400	9000	9000		33700 (12600-33500)	3280 (1050-3280)	15.93	14.40	99
06+09+09+09	Non Duct	Duct	Duct	Duct		6700	9000	9000	9000		33700 (12600-33500)	3310 (1070-3310)	16.07	14.54	99
06+09+09+12	Non Duct	Non Duct	Non Duct	Non Duct		5900	8900	8900	11800		35500 (12600-35400)	3770 (1010-3770)	18.31	16.56	99
06+09+09+12	Non Duct	Non Duct	Non Duct	Duct		6000	8900	8900	11600		35400 (12600-35200)	3790 (1030-3790)	18.41	16.64	99
06+09+09+12	Non Duct	Non Duct	Duct	Non Duct		6000	8900	8600	11800		35300 (12600-35200)	3810 (1030-3810)	18.50	16.73	99
06+09+09+12	Non Duct	Non Duct	Duct	Duct		6100	9000	8600	11500		35200 (12600-35000)	3830 (1050-3830)	18.60	16.82	99
06+09+09+12	Non Duct	Duct	Duct	Non Duct		6100	8600	8600	11900		35200 (12600-35000)	3850 (1050-3850)	18.70	16.91	99
06+09+09+12	Non Duct	Duct	Duct	Duct		6400	8500	8500	11400		34800 (12600-34800)	3870 (1070-3870)	18.79	17.00	99
06+09+09+15	Non Duct	Non Duct	Non Duct	Non Duct		5600	8400	8400	13900		36300 (12600-36000)	3830 (1010-3830)	18.60	16.82	99
06+09+09+15	Non Duct	Non Duct	Non Duct	Duct		5600	8400	8400	13600		36000 (12600-35800)	3850 (1030-3850)	18.70	16.91	99
06+09+09+15	Non Duct	Non Duct	Duct	Non Duct		5600	8300	8100	13800		35800 (12600-35600)	3860 (1030-3860)	18.75	16.95	99
06+09+09+15	Non Duct	Non Duct	Duct	Duct		5700	8500	8100	13500		35800 (12600-35600)	3880 (1050-3880)	18.84	17.04	99
06+09+09+15	Non Duct	Duct	Duct	Non Duct		5700	8000	8000	13900		35600 (12600-35400)	3890 (1050-3890)	18.89	17.08	99
06+09+09+15	Non Duct	Duct	Duct	Duct		6100	8000	8000	13400		35500 (12600-35200)	3910 (1070-3910)	18.99	17.17	99
06+09+09+18	Non Duct	Non Duct	Non Duct	Non Duct		5200	7800	7800	15500		36300 (12600-36000)	3830 (1010-3830)	18.60	16.82	99
06+09+09+18	Non Duct	Non Duct	Non Duct	Duct		5200	7800	7800	15200		36000 (12600-35800)	3850 (1030-3850)	18.70	16.91	99
06+09+09+18	Non Duct	Non Duct	Duct	Non Duct		5200	7700	7500	15400		35800 (12600-35600)	3860 (1030-3860)	18.75	16.95	99
06+09+09+18	Non Duct	Non Duct	Duct	Duct		5300	7900	7500	15100		35800 (12600-35600)	3880 (1050-3880)	18.84	17.04	99
06+09+09+18	Non Duct	Duct	Duct	Non Duct		5300	7400	7400	15400		35500 (12600-35400)	3890 (1050-3890)	18.89	17.08	99
06+09+09+18	Non Duct	Duct	Duct	Duct		5700	7400	7400	14900		35400 (12600-35200)	3910 (1070-3910)	18.99	17.17	99
06+09+09+24	Non Duct	Non Duct	Non Duct	Non Duct		4800	7200	7200	19000		38200 (12600-38000)	3830 (1010-3830)	18.60	16.82	99
06+09+09+24	Non Duct	Non Duct	Duct	Non Duct		4900	7200	7000	19100		38200 (12600-38000)	3850 (1030-3850)	18.70	16.91	99
06+09+09+24	Non Duct	Duct	Duct	Non Duct		5000	7000	7000	19200		38200 (12600-38000)	3850 (1050-3850)	18.70	16.91	99
06+09+12+12	Non Duct	Non Duct	Non Duct	Non Duct		5600	8400	11100	11100		36200 (12600-36000)	3830 (1010-3830)	18.60	16.82	99
06+09+12+12	Non Duct	Non Duct	Non Duct	Duct		5700	8400	11200	10900		36200 (12600-36000)	3850 (1030-3850)	18.70	16.91	99
06+09+12+12	Non Duct	Non Duct	Duct	Duct		5800	8600	10900	10900		36200 (12600-36000)	3870 (1050-3870)	18.79	17.00	99
06+09+12+12	Non Duct	Duct	Non Duct	Non Duct		5600	8100	11100	11100		35900 (12600-35600)	3860 (1030-3860)	18.75	16.95	99
06+09+12+12	Non Duct	Duct	Non Duct	Duct		5700	8100	11200	10800		35800 (12600-35600)	3880 (1050-3880)	18.84	17.04	99
06+09+12+12	Non Duct	Duct	Duct	Duct		6100	8100	10800	10800		35800 (12600-35600)	3900 (1070-3900)	18.94	17.13	99
06+09+12+15	Non Duct	Non Duct	Non Duct	Non Duct		5200	7800	10300	12900		36200 (12600-36000)	3830 (1010-3830)	18.60	16.82	99
06+09+12+15	Non Duct	Non Duct	Non Duct	Duct		5300	7800	10400	12700		36200 (12600-36000)	3850 (1030-3850)	18.70	16.91	99
06+09+12+15	Non Duct	Non Duct	Duct	Non Duct		5300	7800	10100	13000		36200 (12600-36000)	3850 (1030-3850)	18.70	16.91	99
06+09+12+15	Non Duct	Non Duct	Duct	Duct		5400	8000	10100	12700		36200 (12600-36000)	3870 (1050-3870)	18.79	17.00	99
06+09+12+15	Non Duct	Duct	Non Duct	Non Duct		5200	7500	10300	12800		35800 (12600-35600)	3860 (1030-3860)	18.75	16.95	99
06+09+12+15	Non Duct	Duct	Non Duct	Duct		5300	7500	10400	12600		35800 (12600-35600)	3880 (1050-3880)	18.84	17.04	99
06+09+12+15	Non Duct	Duct	Duct	Non Duct		5300	7500	10000	13000		35800 (12600-35600)	3880 (1050-3880)	18.84	17.04	99
06+09+12+15	Non Duct	Duct	Duct	Duct		5700	7500	10000	12600		35800 (12600-35600)	3900 (1070-3900)	18.94	17.13	99
06+09+12+18	Non Duct	Non Duct	Non Duct	Non Duct		4800	7200	9600	14400		36000 (12600-36000)	3830 (1010-3830)	18.60	16.82	99
06+09+12+18	Non Duct	Non Duct	Non Duct	Duct		4900	7300	9700	14200		36100 (12600-36000)	3850 (1030-3850)	18.70	16.91	99
06+09+12+18	Non Duct	Non Duct	Duct	Non Duct		4900	7300	9400	14500		36100 (12600-36000)	3850 (1030-3850)	18.70	16.91	99
06+09+12+18	Non Duct	Non Duct	Duct	Duct		5000	7400	9400	14200		36000 (12600-36000)	3870 (1050-3870)	18.79	17.00	99
06+09+12+18	Non Duct	Duct	Non Duct	Non Duct		4900	7000	9600	14400		35900 (12600-35600)	3860 (1030-3860)	18.75	16.95	99
06+09+12+18	Non Duct	Duct	Non Duct	Duct		5000	7000	9700	14100		35800 (12600-35600)	3880 (1050-3880)	18.84	17.04	99
06+09+12+18	Non Duct	Duct	Duct	Non Duct		5000	7000	9300	14500		35800 (12600-35600)	3880 (1050-3880)	18.84	17.04	99
06+09+12+18	Non Duct	Duct	Duct	Duct		5400	7000	9300	14100		35800 (12600-35600)	3900 (1070-3900)	18.94	17.13	99
06+09+12+24	Non Duct	Non Duct	Non Duct	Non Duct		4500	6800	9000	17900		38200 (12600-38000)	3830 (1010-3830)	18.60	16.82	99

MXZ-5B42NA COOLING

Indoor units combination	Indoor type					Cooling Capacity (BTU/h)						Outdoor unit power consumption (W)	Current (A)	Current (A)	Power factor (%)
	Unit A	Unit B	Unit C	Unit D	Unit E	Unit A	Unit B	Unit C	Unit D	Unit E	Total		208V	230V	
06+09+12+24	Non Duct	Non Duct	Duct	Non Duct		4600	6800	8800	18000		38200 (12600-38000)	3850 (1030-3850)	18.70	16.91	99
06+09+12+24	Non Duct	Duct	Non Duct	Non Duct		4600	6600	9100	18000		38300 (12600-38000)	3850 (1030-3850)	18.70	16.91	99
06+09+12+24	Non Duct	Duct	Duct	Non Duct		4700	6600	8800	18100		38200 (12600-38000)	3850 (1050-3850)	18.70	16.91	99
06+09+15+15	Non Duct	Non Duct	Non Duct	Non Duct		4800	7200	12000	12000		36000 (12600-36000)	3830 (1010-3830)	18.60	16.82	99
06+09+15+15	Non Duct	Non Duct	Non Duct	Duct		4900	7300	12100	11800		36100 (12600-36000)	3850 (1030-3850)	18.70	16.91	99
06+09+15+15	Non Duct	Non Duct	Duct	Duct		5000	7400	11700	11700		35800 (12600-35600)	3860 (1050-3860)	18.75	16.95	99
06+09+15+15	Non Duct	Duct	Non Duct	Non Duct		4900	7000	12000	12000		35900 (12600-35600)	3880 (1030-3880)	18.84	17.04	99
06+09+15+15	Non Duct	Duct	Non Duct	Duct		5000	7000	12100	11700		35800 (12600-35600)	3880 (1050-3880)	18.84	17.04	99
06+09+15+15	Non Duct	Duct	Duct	Duct		5400	7000	11700	11700		35800 (12600-35600)	3880 (1070-3880)	18.84	17.04	99
06+09+15+18	Non Duct	Non Duct	Non Duct	Non Duct		4500	6800	11300	13500		36100 (12600-36000)	3830 (1010-3830)	18.60	16.82	99
06+09+15+18	Non Duct	Non Duct	Non Duct	Duct		4600	6900	11400	13300		36200 (12600-36000)	3850 (1030-3850)	18.70	16.91	99
06+09+15+18	Non Duct	Non Duct	Duct	Non Duct		4600	6900	11100	13600		36200 (12600-36000)	3850 (1030-3850)	18.70	16.91	99
06+09+15+18	Non Duct	Non Duct	Duct	Duct		4700	6900	11000	13200		35800 (12600-35600)	3860 (1050-3860)	18.75	16.95	99
06+09+15+18	Non Duct	Duct	Non Duct	Non Duct		4600	6500	11200	13500		35800 (12600-35600)	3880 (1030-3880)	18.84	17.04	99
06+09+15+18	Non Duct	Duct	Non Duct	Duct		4700	6500	11400	13200		35800 (12600-35600)	3880 (1050-3880)	18.84	17.04	99
06+09+15+18	Non Duct	Duct	Duct	Non Duct		4700	6500	11000	13600		35800 (12600-35600)	3880 (1050-3880)	18.84	17.04	99
06+09+15+18	Non Duct	Duct	Duct	Duct		5100	6500	11000	13200		35800 (12600-35600)	3880 (1070-3880)	18.84	17.04	99
06+09+18+18	Non Duct	Non Duct	Non Duct	Non Duct		4300	6400	12800	12800		36300 (12600-36000)	3830 (1010-3830)	18.60	16.82	99
06+09+18+18	Non Duct	Non Duct	Non Duct	Duct		4400	6500	12800	12600		36300 (12600-36000)	3850 (1030-3850)	18.70	16.91	99
06+09+18+18	Non Duct	Non Duct	Duct	Duct		4400	6500	12400	12400		35700 (12600-35600)	3860 (1050-3860)	18.75	16.95	99
06+09+18+18	Non Duct	Duct	Non Duct	Non Duct		4300	6100	12700	12700		35800 (12600-35600)	3880 (1030-3880)	18.84	17.04	99
06+09+18+18	Non Duct	Duct	Non Duct	Duct		4400	6100	12800	12400		35700 (12600-35600)	3880 (1050-3880)	18.84	17.04	99
06+09+18+18	Non Duct	Duct	Duct	Duct		4800	6100	12400	12400		35700 (12600-35600)	3880 (1070-3880)	18.84	17.04	99
06+12+12+12	Non Duct	Non Duct	Non Duct	Non Duct		5200	10300	10300	10300		36100 (12600-36000)	3830 (1010-3830)	18.60	16.82	99
06+12+12+12	Non Duct	Non Duct	Non Duct	Duct		5300	10400	10400	10100		36200 (12600-36000)	3850 (1030-3850)	18.70	16.91	99
06+12+12+12	Non Duct	Non Duct	Duct	Duct		5300	10400	10000	10000		35700 (12600-35600)	3860 (1050-3860)	18.75	16.95	99
06+12+12+12	Non Duct	Duct	Duct	Duct		5700	10000	10000	10000		35700 (12600-35600)	3860 (1070-3860)	18.75	16.95	99
06+12+12+15	Non Duct	Non Duct	Non Duct	Non Duct		4800	9600	9600	12000		36000 (12600-36000)	3830 (1010-3830)	18.60	16.82	99
06+12+12+15	Non Duct	Non Duct	Non Duct	Duct		4900	9700	9700	11800		36100 (12600-36000)	3850 (1030-3850)	18.70	16.91	99
06+12+12+15	Non Duct	Non Duct	Duct	Non Duct		4900	9600	9300	12000		35800 (12600-35600)	3860 (1030-3860)	18.75	16.95	99
06+12+12+15	Non Duct	Non Duct	Duct	Duct		5000	9700	9300	11700		35700 (12600-35600)	3860 (1050-3860)	18.75	16.95	99
06+12+12+15	Non Duct	Duct	Duct	Non Duct		5000	9300	9300	12100		35700 (12600-35600)	3860 (1050-3860)	18.75	16.95	99
06+12+12+15	Non Duct	Duct	Duct	Duct		5400	9300	9300	11700		35700 (12600-35600)	3860 (1070-3860)	18.75	16.95	99
06+12+12+18	Non Duct	Non Duct	Non Duct	Non Duct		4500	9000	9000	13500		36000 (12600-36000)	3830 (1010-3830)	18.60	16.82	99
06+12+12+18	Non Duct	Non Duct	Non Duct	Duct		4600	9100	9100	13300		36100 (12600-36000)	3850 (1030-3850)	18.70	16.91	99
06+12+12+18	Non Duct	Non Duct	Duct	Non Duct		4600	9000	8700	13500		35800 (12600-35600)	3860 (1030-3860)	18.75	16.95	99
06+12+12+18	Non Duct	Non Duct	Duct	Duct		4700	9100	8700	13200		35700 (12600-35600)	3860 (1050-3860)	18.75	16.95	99
06+12+12+18	Non Duct	Duct	Duct	Non Duct		4700	8700	8700	13600		35700 (12600-35600)	3860 (1050-3860)	18.75	16.95	99
06+12+12+18	Non Duct	Duct	Duct	Duct		5100	8700	8700	13200		35700 (12600-35600)	3860 (1070-3860)	18.75	16.95	99
06+12+15+15	Non Duct	Non Duct	Non Duct	Non Duct		4500	9000	11300	11300		36100 (12600-36000)	3830 (1010-3830)	18.60	16.82	99
06+12+15+15	Non Duct	Non Duct	Non Duct	Duct		4600	9100	11400	11100		36200 (12600-36000)	3850 (1030-3850)	18.70	16.91	99
06+12+15+15	Non Duct	Non Duct	Duct	Duct		4700	9100	11000	11000		35800 (12600-35600)	3860 (1050-3860)	18.75	16.95	99
06+12+15+15	Non Duct	Duct	Non Duct	Non Duct		4600	8700	11200	11200		35700 (12600-35600)	3860 (1030-3860)	18.75	16.95	99
06+12+15+15	Non Duct	Duct	Non Duct	Duct		4700	8700	11400	11000		35800 (12600-35600)	3860 (1050-3860)	18.75	16.95	99
06+12+15+15	Non Duct	Duct	Duct	Duct		5100	8700	11000	11000		35800 (12600-35600)	3860 (1070-3860)	18.75	16.95	99
06+12+15+18	Non Duct	Non Duct	Non Duct	Non Duct		4300	8500	10600	12800		36200 (12600-36000)	3830 (1010-3830)	18.60	16.82	99
06+12+15+18	Non Duct	Non Duct	Non Duct	Duct		4400	8600	10700	12600		36300 (12600-36000)	3850 (1030-3850)	18.70	16.91	99
06+12+15+18	Non Duct	Non Duct	Duct	Non Duct		4400	8600	10400	12800		36200 (12600-36000)	3850 (1030-3850)	18.70	16.91	99
06+12+15+18	Non Duct	Non Duct	Duct	Duct		4400	8600	10300	12400		35700 (12600-35600)	3860 (1050-3860)	18.75	16.95	99
06+12+15+18	Non Duct	Duct	Non Duct	Non Duct		4300	8200	10600	12700		35800 (12600-35600)	3860 (1030-3860)	18.75	16.95	99
06+12+15+18	Non Duct	Duct	Non Duct	Duct		4400	8200	10700	12400		35700 (12600-35600)	3860 (1050-3860)	18.75	16.95	99

MXZ-5B42NA COOLING

Indoor units combination	Indoor type					Cooling Capacity (BTU/h)						Outdoor unit power consumption (W)	Current (A)	Current (A)	Power factor (%)
	Unit A	Unit B	Unit C	Unit D	Unit E	Unit A	Unit B	Unit C	Unit D	Unit E	Total		208V	230V	
06+12+15+18	Non Duct	Duct	Duct	Non Duct		4400	8200	10300	12800		35700 (12600-35600)	3860 (1050-3860)	18.75	16.95	99
06+12+15+18	Non Duct	Duct	Duct	Duct		4800	8200	10300	12400		35700 (12600-35600)	3860 (1070-3860)	18.75	16.95	99
06+15+15+15	Non Duct	Non Duct	Non Duct	Non Duct		4300	10600	10600	10600		36100 (12600-36000)	3830 (1010-3830)	18.60	16.82	99
06+15+15+15	Non Duct	Non Duct	Non Duct	Duct		4400	10700	10700	10400		36200 (12600-36000)	3850 (1030-3850)	18.70	16.91	99
06+15+15+15	Non Duct	Non Duct	Duct	Duct		4400	10700	10300	10300		35700 (12600-35600)	3860 (1050-3860)	18.75	16.95	99
06+15+15+15	Non Duct	Duct	Duct	Duct		4800	10300	10300	10300		35700 (12600-35600)	3860 (1070-3860)	18.75	16.95	99
09+09+09+09	Non Duct	Non Duct	Non Duct	Non Duct		8900	8900	8900	8900		35600 (12600-35400)	3770 (1010-3770)	18.31	16.56	99
09+09+09+09	Non Duct	Non Duct	Non Duct	Duct		8900	8900	8900	8600		35300 (12600-35150)	3810 (1030-3810)	18.50	16.73	99
09+09+09+09	Non Duct	Non Duct	Duct	Duct		9000	9000	8600	8600		35200 (12600-34900)	3860 (1050-3860)	18.75	16.95	99
09+09+09+09	Non Duct	Duct	Duct	Duct		9300	8500	8500	8500		34800 (12600-34650)	3910 (1070-3910)	18.99	17.17	99
09+09+09+09	Duct	Duct	Duct	Duct		8400	8400	8400	8400		33600 (12600-34400)	3950 (1090-3950)	19.18	17.35	99
09+09+09+12	Non Duct	Non Duct	Non Duct	Non Duct		8400	8400	8400	11100		36300 (12600-36000)	3830 (1010-3830)	18.60	16.82	99
09+09+09+12	Non Duct	Non Duct	Non Duct	Duct		8400	8400	8400	10900		36100 (12600-36000)	3850 (1030-3850)	18.70	16.91	99
09+09+09+12	Non Duct	Non Duct	Duct	Non Duct		8300	8300	8100	11100		35800 (12600-35600)	3860 (1030-3860)	18.75	16.95	99
09+09+09+12	Non Duct	Non Duct	Duct	Duct		8500	8500	8100	10800		35900 (12600-35600)	3880 (1050-3880)	18.84	17.04	99
09+09+09+12	Non Duct	Duct	Duct	Non Duct		8400	8000	8000	11100		35500 (12600-35200)	3890 (1050-3890)	18.89	17.08	99
09+09+09+12	Non Duct	Duct	Duct	Duct		8800	8000	8000	10700		35500 (12600-35200)	3910 (1070-3910)	18.99	17.17	99
09+09+09+12	Duct	Duct	Duct	Non Duct		7900	7900	7900	11400		35100 (12600-34800)	3920 (1070-3920)	19.04	17.22	99
09+09+09+12	Duct	Duct	Duct	Duct		7900	7900	7900	10600		34300 (12600-34800)	3940 (1090-3940)	19.13	17.30	99
09+09+09+15	Non Duct	Non Duct	Non Duct	Non Duct		7800	7800	7800	12900		36300 (12600-36000)	3830 (1010-3830)	18.60	16.82	99
09+09+09+15	Non Duct	Non Duct	Non Duct	Duct		7800	7800	7800	12700		36100 (12600-36000)	3850 (1030-3850)	18.70	16.91	99
09+09+09+15	Non Duct	Non Duct	Duct	Non Duct		7700	7700	7500	12800		35700 (12600-35600)	3860 (1030-3860)	18.75	16.95	99
09+09+09+15	Non Duct	Non Duct	Duct	Duct		7900	7900	7500	12600		35900 (12600-35600)	3880 (1050-3880)	18.84	17.04	99
09+09+09+15	Non Duct	Duct	Duct	Non Duct		7800	7400	7400	12800		35400 (12600-35200)	3890 (1050-3890)	18.89	17.08	99
09+09+09+15	Non Duct	Duct	Duct	Duct		8200	7400	7400	12400		35400 (12600-35200)	3910 (1070-3910)	18.99	17.17	99
09+09+09+15	Duct	Duct	Duct	Non Duct		7300	7300	7300	13100		35000 (12600-34800)	3920 (1070-3920)	19.04	17.22	99
09+09+09+15	Duct	Duct	Duct	Duct		7300	7300	7300	12300		34200 (12600-34800)	3940 (1090-3940)	19.13	17.30	99
09+09+09+18	Non Duct	Non Duct	Non Duct	Non Duct		7200	7200	7200	14400		36000 (12600-36000)	3830 (1010-3830)	18.60	16.82	99
09+09+09+18	Non Duct	Non Duct	Non Duct	Duct		7300	7300	7300	14200		36100 (12600-36000)	3850 (1030-3850)	18.70	16.91	99
09+09+09+18	Non Duct	Non Duct	Duct	Non Duct		7200	7200	7000	14400		35800 (12600-35600)	3860 (1030-3860)	18.75	16.95	99
09+09+09+18	Non Duct	Non Duct	Duct	Duct		7400	7400	7000	14100		35900 (12600-35600)	3880 (1050-3880)	18.84	17.04	99
09+09+09+18	Non Duct	Duct	Duct	Non Duct		7300	6900	6900	14300		35400 (12600-35200)	3890 (1050-3890)	18.89	17.08	99
09+09+09+18	Non Duct	Duct	Duct	Duct		7700	6900	6900	13900		35400 (12600-35200)	3910 (1070-3910)	18.99	17.17	99
09+09+09+18	Duct	Duct	Duct	Non Duct		6800	6800	6800	14600		35000 (12600-34800)	3920 (1070-3920)	19.04	17.22	99
09+09+09+18	Duct	Duct	Duct	Duct		6800	6800	6800	13800		34200 (12600-34800)	3940 (1090-3940)	19.13	17.30	99
09+09+09+24	Non Duct	Non Duct	Non Duct	Non Duct		6800	6800	6800	17900		38300 (12600-38000)	3830 (1010-3830)	18.60	16.82	99
09+09+09+24	Non Duct	Non Duct	Duct	Non Duct		6800	6800	6600	18000		38200 (12600-38000)	3850 (1030-3850)	18.70	16.91	99
09+09+09+24	Non Duct	Duct	Duct	Non Duct		7000	6600	6600	18100		38300 (12600-38000)	3850 (1050-3850)	18.70	16.91	99
09+09+09+24	Duct	Duct	Duct	Non Duct		6600	6600	6600	18500		38300 (12600-38000)	3850 (1070-3850)	18.70	16.91	99
09+09+12+12	Non Duct	Non Duct	Non Duct	Non Duct		7800	7800	10300	10300		36200 (12600-36000)	3830 (1010-3830)	18.60	16.82	99
09+09+12+12	Non Duct	Non Duct	Non Duct	Duct		7800	7800	10400	10100		36100 (12600-36000)	3850 (1030-3850)	18.70	16.91	99
09+09+12+12	Non Duct	Non Duct	Duct	Duct		8000	8000	10100	10100		36200 (12600-36000)	3870 (1050-3870)	18.79	17.00	99
09+09+12+12	Non Duct	Duct	Non Duct	Non Duct		7700	7500	10300	10300		35800 (12600-35600)	3860 (1030-3860)	18.75	16.95	99
09+09+12+12	Non Duct	Duct	Non Duct	Duct		7900	7500	10400	10000		35800 (12600-35600)	3880 (1050-3880)	18.84	17.04	99
09+09+12+12	Non Duct	Duct	Duct	Duct		8300	7500	10000	10000		35800 (12600-35600)	3900 (1070-3900)	18.94	17.13	99
09+09+12+12	Duct	Duct	Non Duct	Non Duct		7400	7400	10300	10300		35400 (12600-35200)	3890 (1050-3890)	18.89	17.08	99
09+09+12+12	Duct	Duct	Non Duct	Duct		7400	7400	10700	9900		35400 (12600-35200)	3910 (1070-3910)	18.99	17.17	99
09+09+12+12	Duct	Duct	Duct	Duct		7400	7400	9900	9900		34600 (12600-35200)	3930 (1090-3930)	19.09	17.26	99
09+09+12+15	Non Duct	Non Duct	Non Duct	Non Duct		7200	7200	9600	12000		36000 (12600-36000)	3830 (1010-3830)	18.60	16.82	99
09+09+12+15	Non Duct	Non Duct	Non Duct	Duct		7300	7300	9700	11800		36100 (12600-36000)	3850 (1030-3850)	18.70	16.91	99
09+09+12+15	Non Duct	Non Duct	Duct	Non Duct		7300	7300	9400	12100		36100 (12600-36000)	3850 (1030-3850)	18.70	16.91	99

MXZ-5B42NA COOLING

Indoor units combination	Indoor type					Cooling Capacity (BTU/h)						Outdoor unit power consumption (W)	Current (A)	Current (A)	Power factor (%)
	Unit A	Unit B	Unit C	Unit D	Unit E	Unit A	Unit B	Unit C	Unit D	Unit E	Total		208V	230V	
09+09+12+15	Non Duct	Non Duct	Duct	Duct		7400	7400	9400	11800		36000 (12600-36000)	3870 (1050-3870)	18.79	17.00	99
09+09+12+15	Non Duct	Duct	Non Duct	Non Duct		7300	7000	9700	12100		36100 (12600-36000)	3870 (1030-3870)	18.79	17.00	99
09+09+12+15	Non Duct	Duct	Non Duct	Duct		7400	7000	9800	11800		36000 (12600-36000)	3870 (1050-3870)	18.79	17.00	99
09+09+12+15	Non Duct	Duct	Duct	Non Duct		7400	7000	9400	12200		36000 (12600-36000)	3870 (1050-3870)	18.79	17.00	99
09+09+12+15	Non Duct	Duct	Duct	Duct		7800	7000	9300	11700		35800 (12600-35600)	3860 (1070-3860)	18.75	16.95	99
09+09+12+15	Duct	Duct	Non Duct	Non Duct		7000	7000	9700	12100		35800 (12600-35600)	3860 (1050-3860)	18.75	16.95	99
09+09+12+15	Duct	Duct	Non Duct	Duct		7000	7000	10100	11700		35800 (12600-35600)	3860 (1070-3860)	18.75	16.95	99
09+09+12+15	Duct	Duct	Duct	Non Duct		7000	7000	9300	12500		35800 (12600-35600)	3860 (1070-3860)	18.75	16.95	99
09+09+12+15	Duct	Duct	Duct	Duct		7000	7000	9400	11800		35200 (12600-36000)	3870 (1090-3870)	18.79	17.00	99
09+09+12+18	Non Duct	Non Duct	Non Duct	Non Duct		6800	6800	9000	13500		36100 (12600-36000)	3870 (1010-3870)	18.79	17.00	99
09+09+12+18	Non Duct	Non Duct	Non Duct	Duct		6900	6900	9100	13300		36200 (12600-36000)	3870 (1030-3870)	18.79	17.00	99
09+09+12+18	Non Duct	Non Duct	Duct	Non Duct		6900	6900	8800	13600		36200 (12600-36000)	3870 (1030-3870)	18.79	17.00	99
09+09+12+18	Non Duct	Non Duct	Duct	Duct		7000	7000	8800	13300		36100 (12600-36000)	3870 (1050-3870)	18.79	17.00	99
09+09+12+18	Non Duct	Duct	Non Duct	Non Duct		6900	6600	9100	13600		36200 (12600-36000)	3870 (1030-3870)	18.79	17.00	99
09+09+12+18	Non Duct	Duct	Non Duct	Duct		7000	6600	9200	13300		36100 (12600-36000)	3870 (1050-3870)	18.79	17.00	99
09+09+12+18	Non Duct	Duct	Duct	Non Duct		7000	6600	8800	13700		36100 (12600-36000)	3870 (1050-3870)	18.79	17.00	99
09+09+12+18	Non Duct	Duct	Duct	Duct		7400	6600	8800	13300		36100 (12600-36000)	3870 (1070-3870)	18.79	17.00	99
09+09+12+18	Duct	Duct	Non Duct	Non Duct		6600	6600	9200	13700		36100 (12600-36000)	3870 (1050-3870)	18.79	17.00	99
09+09+12+18	Duct	Duct	Non Duct	Duct		6600	6600	9600	13300		36100 (12600-36000)	3870 (1070-3870)	18.79	17.00	99
09+09+12+18	Duct	Duct	Duct	Non Duct		6600	6600	8800	14100		36100 (12600-36000)	3870 (1070-3870)	18.79	17.00	99
09+09+12+18	Duct	Duct	Duct	Duct		6600	6600	8800	13300		35300 (12600-36000)	3870 (1090-3870)	18.79	17.00	99
09+09+15+15	Non Duct	Non Duct	Non Duct	Non Duct		6800	6800	11300	11300		36200 (12600-36000)	3830 (1010-3830)	18.60	16.82	99
09+09+15+15	Non Duct	Non Duct	Non Duct	Duct		6900	6900	11400	11100		36300 (12600-36000)	3850 (1030-3850)	18.70	16.91	99
09+09+15+15	Non Duct	Non Duct	Duct	Duct		7000	7000	11100	11100		36200 (12600-36000)	3870 (1050-3870)	18.79	17.00	99
09+09+15+15	Non Duct	Duct	Non Duct	Non Duct		6800	6500	11200	11200		35700 (12600-35600)	3860 (1030-3860)	18.75	16.95	99
09+09+15+15	Non Duct	Duct	Non Duct	Duct		6900	6500	11400	11000		35800 (12600-35600)	3880 (1050-3880)	18.84	17.04	99
09+09+15+15	Non Duct	Duct	Duct	Duct		7300	6500	11000	11000		35800 (12600-35600)	3900 (1070-3900)	18.94	17.13	99
09+09+15+15	Duct	Duct	Non Duct	Non Duct		6400	6400	11200	11200		35200 (12600-35200)	3890 (1050-3890)	18.89	17.08	99
09+09+15+15	Duct	Duct	Non Duct	Duct		6400	6400	11600	10800		35200 (12600-35200)	3910 (1070-3910)	18.99	17.17	99
09+09+15+15	Duct	Duct	Duct	Duct		6500	6500	11000	11000		35000 (12600-35600)	3900 (1090-3900)	18.94	17.13	99
09+09+15+18	Non Duct	Non Duct	Non Duct	Non Duct		6400	6400	10600	12800		36200 (12600-36000)	3870 (1010-3870)	18.79	17.00	99
09+09+15+18	Non Duct	Non Duct	Non Duct	Duct		6500	6500	10700	12600		36300 (12600-36000)	3870 (1030-3870)	18.79	17.00	99
09+09+15+18	Non Duct	Non Duct	Duct	Non Duct		6500	6500	10400	12800		36200 (12600-36000)	3870 (1030-3870)	18.79	17.00	99
09+09+15+18	Non Duct	Non Duct	Duct	Duct		6600	6600	10400	12600		36200 (12600-36000)	3870 (1050-3870)	18.79	17.00	99
09+09+15+18	Non Duct	Duct	Non Duct	Non Duct		6500	6200	10700	12800		36200 (12600-36000)	3870 (1030-3870)	18.79	17.00	99
09+09+15+18	Non Duct	Duct	Non Duct	Duct		6600	6200	10800	12600		36200 (12600-36000)	3870 (1050-3870)	18.79	17.00	99
09+09+15+18	Non Duct	Duct	Duct	Non Duct		6600	6200	10400	13000		36200 (12600-36000)	3870 (1050-3870)	18.79	17.00	99
09+09+15+18	Non Duct	Duct	Duct	Duct		7000	6200	10400	12600		36200 (12600-36000)	3870 (1070-3870)	18.79	17.00	99
09+09+15+18	Duct	Duct	Non Duct	Non Duct		6200	6200	10800	13000		36200 (12600-36000)	3870 (1050-3870)	18.79	17.00	99
09+09+15+18	Duct	Duct	Non Duct	Duct		6200	6200	11200	12600		36200 (12600-36000)	3870 (1070-3870)	18.79	17.00	99
09+09+15+18	Duct	Duct	Duct	Non Duct		6200	6200	10400	13400		36200 (12600-36000)	3870 (1070-3870)	18.79	17.00	99
09+09+15+18	Duct	Duct	Duct	Duct		6200	6200	10400	12600		35400 (12600-36000)	3870 (1090-3870)	18.79	17.00	99
09+12+12+12	Non Duct	Non Duct	Non Duct	Non Duct		7200	9600	9600	9600		36000 (12600-36000)	3830 (1010-3830)	18.60	16.82	99
09+12+12+12	Non Duct	Non Duct	Non Duct	Duct		7300	9700	9700	9400		36100 (12600-36000)	3850 (1030-3850)	18.70	16.91	99
09+12+12+12	Non Duct	Non Duct	Duct	Duct		7400	9800	9400	9400		36000 (12600-36000)	3870 (1050-3870)	18.79	17.00	99
09+12+12+12	Non Duct	Duct	Duct	Duct		7800	9300	9300	9300		35700 (12600-35600)	3860 (1070-3860)	18.75	16.95	99
09+12+12+12	Duct	Non Duct	Non Duct	Non Duct		6900	9500	9500	9500		35400 (12600-35200)	3890 (1030-3890)	18.89	17.08	99
09+12+12+12	Duct	Non Duct	Non Duct	Duct		6900	9600	9600	9200		35300 (12600-35200)	3910 (1050-3910)	18.99	17.17	99
09+12+12+12	Duct	Non Duct	Duct	Duct		7000	10100	9300	9300		35700 (12600-35600)	3900 (1070-3900)	18.94	17.13	99
09+12+12+12	Duct	Duct	Duct	Duct		7000	9300	9300	9300		34900 (12600-35600)	3860 (1090-3860)	18.75	16.95	99
09+12+12+15	Non Duct	Non Duct	Non Duct	Non Duct		6800	9000	9000	11300		36100 (12600-36000)	3870 (1010-3870)	18.79	17.00	99

MXZ-5B42NA COOLING

Indoor units combination	Indoor type					Cooling Capacity (BTU/h)						Outdoor unit power consumption (W)	Current (A)	Current (A)	Power factor (%)
	Unit A	Unit B	Unit C	Unit D	Unit E	Unit A	Unit B	Unit C	Unit D	Unit E	Total		208V	230V	
09+12+12+15	Non Duct	Non Duct	Non Duct	Duct		6900	9100	9100	11100		36200 (12600-36000)	3870 (1030-3870)	18.79	17.00	99
09+12+12+15	Non Duct	Non Duct	Duct	Non Duct		6900	9100	8800	11400		36200 (12600-36000)	3870 (1030-3870)	18.79	17.00	99
09+12+12+15	Non Duct	Non Duct	Duct	Duct		7000	9200	8800	11100		36100 (12600-36000)	3870 (1050-3870)	18.79	17.00	99
09+12+12+15	Non Duct	Duct	Duct	Non Duct		7000	8800	8800	11500		36100 (12600-36000)	3870 (1050-3870)	18.79	17.00	99
09+12+12+15	Non Duct	Duct	Duct	Duct		7400	8800	8800	11100		36100 (12600-36000)	3870 (1070-3870)	18.79	17.00	99
09+12+12+15	Duct	Non Duct	Non Duct	Non Duct		6600	9100	9100	11400		36200 (12600-36000)	3870 (1030-3870)	18.79	17.00	99
09+12+12+15	Duct	Non Duct	Non Duct	Duct		6600	9200	9200	11100		36100 (12600-36000)	3870 (1050-3870)	18.79	17.00	99
09+12+12+15	Duct	Non Duct	Duct	Non Duct		6600	9200	8800	11500		36100 (12600-36000)	3870 (1050-3870)	18.79	17.00	99
09+12+12+15	Duct	Non Duct	Duct	Duct		6600	9600	8800	11100		36100 (12600-36000)	3870 (1070-3870)	18.79	17.00	99
09+12+12+15	Duct	Duct	Duct	Non Duct		6600	8800	8800	11900		36100 (12600-36000)	3870 (1070-3870)	18.79	17.00	99
09+12+12+15	Duct	Duct	Duct	Duct		6600	8800	8800	11100		35300 (12600-36000)	3870 (1090-3870)	18.79	17.00	99
09+12+12+18	Non Duct	Non Duct	Non Duct	Non Duct		6400	8500	8500	12800		36200 (12600-36000)	3870 (1010-3870)	18.79	17.00	99
09+12+12+18	Non Duct	Non Duct	Non Duct	Duct		6500	8600	8600	12600		36300 (12600-36000)	3870 (1030-3870)	18.79	17.00	99
09+12+12+18	Non Duct	Non Duct	Duct	Non Duct		6500	8600	8300	12800		36200 (12600-36000)	3870 (1030-3870)	18.79	17.00	99
09+12+12+18	Non Duct	Non Duct	Duct	Duct		6600	8700	8300	12600		36200 (12600-36000)	3870 (1050-3870)	18.79	17.00	99
09+12+12+18	Non Duct	Duct	Duct	Non Duct		6600	8300	8300	13000		36200 (12600-36000)	3870 (1050-3870)	18.79	17.00	99
09+12+12+18	Non Duct	Duct	Duct	Duct		7000	8300	8300	12600		36200 (12600-36000)	3870 (1070-3870)	18.79	17.00	99
09+12+12+18	Duct	Non Duct	Non Duct	Non Duct		6200	8600	8600	12800		36200 (12600-36000)	3870 (1030-3870)	18.79	17.00	99
09+12+12+18	Duct	Non Duct	Non Duct	Duct		6200	8700	8700	12600		36200 (12600-36000)	3870 (1050-3870)	18.79	17.00	99
09+12+12+18	Duct	Non Duct	Duct	Non Duct		6200	8700	8300	13000		36200 (12600-36000)	3870 (1050-3870)	18.79	17.00	99
09+12+12+18	Duct	Non Duct	Duct	Duct		6200	9100	8300	12600		36200 (12600-36000)	3870 (1070-3870)	18.79	17.00	99
09+12+12+18	Duct	Duct	Duct	Non Duct		6200	8300	8300	13400		36200 (12600-36000)	3870 (1070-3870)	18.79	17.00	99
09+12+12+18	Duct	Duct	Duct	Duct		6200	8300	8300	12600		35400 (12600-36000)	3870 (1090-3870)	18.79	17.00	99
09+12+15+15	Non Duct	Non Duct	Non Duct	Non Duct		6400	8500	10600	10600		36100 (12600-36000)	3870 (1010-3870)	18.79	17.00	99
09+12+15+15	Non Duct	Non Duct	Non Duct	Duct		6500	8600	10700	10400		36200 (12600-36000)	3870 (1030-3870)	18.79	17.00	99
09+12+15+15	Non Duct	Non Duct	Duct	Duct		6600	8700	10400	10400		36100 (12600-36000)	3870 (1050-3870)	18.79	17.00	99
09+12+15+15	Non Duct	Duct	Non Duct	Non Duct		6500	8300	10700	10700		36200 (12600-36000)	3870 (1030-3870)	18.79	17.00	99
09+12+15+15	Non Duct	Duct	Non Duct	Duct		6600	8300	10800	10400		36100 (12600-36000)	3870 (1050-3870)	18.79	17.00	99
09+12+15+15	Non Duct	Duct	Duct	Duct		7000	8300	10400	10400		36100 (12600-36000)	3870 (1070-3870)	18.79	17.00	99
09+12+15+15	Duct	Non Duct	Non Duct	Non Duct		6200	8600	10700	10700		36200 (12600-36000)	3870 (1030-3870)	18.79	17.00	99
09+12+15+15	Duct	Non Duct	Non Duct	Duct		6200	8700	10800	10400		36100 (12600-36000)	3870 (1050-3870)	18.79	17.00	99
09+12+15+15	Duct	Non Duct	Duct	Duct		6200	9100	10400	10400		36100 (12600-36000)	3870 (1070-3870)	18.79	17.00	99
09+12+15+15	Duct	Duct	Non Duct	Non Duct		6200	8300	10800	10800		36100 (12600-36000)	3870 (1050-3870)	18.79	17.00	99
09+12+15+15	Duct	Duct	Non Duct	Duct		6200	8300	11200	10400		36100 (12600-36000)	3870 (1070-3870)	18.79	17.00	99
09+12+15+15	Duct	Duct	Duct	Duct		6200	8300	10400	10400		35300 (12600-36000)	3870 (1090-3870)	18.79	17.00	99
12+12+12+12	Non Duct	Non Duct	Non Duct	Non Duct		9000	9000	9000	9000		36000 (12600-36000)	3870 (1010-3870)	18.79	17.00	99
12+12+12+12	Non Duct	Non Duct	Non Duct	Duct		9100	9100	9100	8800		36100 (12600-36000)	3870 (1030-3870)	18.79	17.00	99
12+12+12+12	Non Duct	Non Duct	Duct	Duct		9200	9200	8800	8800		36000 (12600-36000)	3870 (1050-3870)	18.79	17.00	99
12+12+12+12	Non Duct	Duct	Duct	Duct		9600	8800	8800	8800		36000 (12600-36000)	3870 (1070-3870)	18.79	17.00	99
12+12+12+12	Duct	Duct	Duct	Duct		8800	8800	8800	8800		35200 (12600-36000)	3870 (1090-3870)	18.79	17.00	99
12+12+12+15	Non Duct	Non Duct	Non Duct	Non Duct		8500	8500	8500	10600		36100 (12600-36000)	3870 (1010-3870)	18.79	17.00	99
12+12+12+15	Non Duct	Non Duct	Non Duct	Duct		8600	8600	8600	10400		36200 (12600-36000)	3870 (1030-3870)	18.79	17.00	99
12+12+12+15	Non Duct	Non Duct	Duct	Non Duct		8600	8600	8300	10700		36200 (12600-36000)	3870 (1030-3870)	18.79	17.00	99
12+12+12+15	Non Duct	Non Duct	Duct	Duct		8700	8700	8300	10400		36100 (12600-36000)	3870 (1050-3870)	18.79	17.00	99
12+12+12+15	Non Duct	Duct	Duct	Non Duct		8700	8300	8300	10800		36100 (12600-36000)	3870 (1050-3870)	18.79	17.00	99
12+12+12+15	Non Duct	Duct	Duct	Duct		9100	8300	8300	10400		36100 (12600-36000)	3870 (1070-3870)	18.79	17.00	99
12+12+12+15	Duct	Duct	Duct	Non Duct		8300	8300	8300	11200		36100 (12600-36000)	3870 (1070-3870)	18.79	17.00	99
12+12+12+15	Duct	Duct	Duct	Duct		8300	8300	8300	10400		35300 (12600-36000)	3870 (1090-3870)	18.79	17.00	99
06+06+06+06+06	Non Duct	Non Duct	Non Duct	Non Duct	Non Duct	6200	6200	6200	6200	6200	31000 (12600-31000)	3850 (1010-3850)	18.70	16.91	99
06+06+06+06+09	Non Duct	Non Duct	Non Duct	Non Duct	Non Duct	6100	6100	6100	6100	9200	33600 (12600-33500)	4000 (1010-4000)	19.43	17.57	99
06+06+06+06+09	Non Duct	Non Duct	Non Duct	Non Duct	Duct	6200	6200	6200	6200	9000	33800 (12600-33500)	3800 (1030-3800)	18.45	16.69	99

MXZ-5B42NA COOLING

Indoor units combination	Indoor type					Cooling Capacity (BTU/h)						Outdoor unit power consumption (W)	Current (A)	Current (A)	Power factor (%)
	Unit A	Unit B	Unit C	Unit D	Unit E	Unit A	Unit B	Unit C	Unit D	Unit E	Total		208V	230V	
06+06+06+06+12	Non Duct	Non Duct	Non Duct	Non Duct	Non Duct	6400	6400	6400	6400	12700	38300 (12600-38000)	4500 (1010-4500)	21.85	19.76	99
06+06+06+06+12	Non Duct	Non Duct	Non Duct	Non Duct	Duct	6300	6300	6300	6300	12200	37400 (12600-37000)	4300 (1030-4300)	20.88	18.88	99
06+06+06+06+15	Non Duct	Non Duct	Non Duct	Non Duct	Non Duct	6000	6000	6000	6000	15000	39000 (12600-39000)	4400 (1010-4400)	21.37	19.32	99
06+06+06+06+15	Non Duct	Non Duct	Non Duct	Non Duct	Duct	5900	5900	5900	5900	14500	38100 (12600-38000)	4200 (1030-4200)	20.40	18.45	99
06+06+06+06+18	Non Duct	Non Duct	Non Duct	Non Duct	Non Duct	5900	5900	5900	5900	17600	41200 (12600-41000)	4800 (1010-4800)	23.31	21.08	99
06+06+06+06+18	Non Duct	Non Duct	Non Duct	Non Duct	Duct	5800	5800	5800	5800	17000	40200 (12600-40000)	4600 (1030-4600)	22.34	20.20	99
06+06+06+06+24	Non Duct	Non Duct	Non Duct	Non Duct	Non Duct	5200	5200	5200	5200	20800	41600 (12600-41500)	4850 (1010-4850)	23.55	21.30	99
06+06+06+09+09	Non Duct	Non Duct	Non Duct	Non Duct	Non Duct	6400	6400	6400	9500	9500	38200 (12600-38000)	4500 (1010-4500)	21.85	19.76	99
06+06+06+09+09	Non Duct	Non Duct	Non Duct	Non Duct	Duct	6300	6300	6300	9300	9100	37300 (12600-37000)	4300 (1030-4300)	20.88	18.88	99
06+06+06+09+09	Non Duct	Non Duct	Non Duct	Duct	Duct	6200	6200	6200	8800	8800	36200 (12600-36000)	4100 (1050-4100)	19.91	18.01	99
06+06+06+09+12	Non Duct	Non Duct	Non Duct	Non Duct	Non Duct	6300	6300	6300	9400	12500	40800 (12600-40500)	4600 (1010-4600)	22.34	20.20	99
06+06+06+09+12	Non Duct	Non Duct	Non Duct	Non Duct	Duct	6200	6200	6200	9200	12000	39800 (12600-39500)	4400 (1030-4400)	21.37	19.32	99
06+06+06+09+12	Non Duct	Non Duct	Non Duct	Duct	Non Duct	6200	6200	6200	9000	12300	39900 (12600-39500)	4400 (1030-4400)	21.37	19.32	99
06+06+06+09+12	Non Duct	Non Duct	Non Duct	Duct	Duct	6100	6100	6100	8700	11700	38700 (12600-38500)	4200 (1050-4200)	20.40	18.45	99
06+06+06+09+15	Non Duct	Non Duct	Non Duct	Non Duct	Non Duct	5900	5900	5900	8800	14700	41200 (12600-41000)	4800 (1010-4800)	23.31	21.08	99
06+06+06+09+15	Non Duct	Non Duct	Non Duct	Non Duct	Duct	5800	5800	5800	8700	14100	40200 (12600-40000)	4600 (1030-4600)	22.34	20.20	99
06+06+06+09+15	Non Duct	Non Duct	Non Duct	Duct	Non Duct	5800	5800	5800	8400	14400	40200 (12600-40000)	4600 (1030-4600)	22.34	20.20	99
06+06+06+09+15	Non Duct	Non Duct	Non Duct	Duct	Duct	5800	5800	5800	8200	13800	39400 (12600-39000)	4400 (1050-4400)	21.37	19.32	99
06+06+06+09+18	Non Duct	Non Duct	Non Duct	Non Duct	Non Duct	5600	5600	5600	8300	16600	41700 (12600-41500)	4900 (1010-4900)	23.80	21.52	99
06+06+06+09+18	Non Duct	Non Duct	Non Duct	Non Duct	Duct	5500	5500	5500	8200	16000	40700 (12600-40500)	4700 (1030-4700)	22.82	20.64	99
06+06+06+09+18	Non Duct	Non Duct	Non Duct	Duct	Non Duct	5500	5500	5500	7900	16300	40700 (12600-40500)	4700 (1030-4700)	22.82	20.64	99
06+06+06+09+18	Non Duct	Non Duct	Non Duct	Duct	Duct	5500	5500	5500	7700	15600	39800 (12600-39500)	4500 (1050-4500)	21.85	19.76	99
06+06+06+09+24	Non Duct	Non Duct	Non Duct	Non Duct	Non Duct	4900	4900	4900	7400	19600	41700 (12600-41500)	4750 (1010-4750)	23.07	20.86	99
06+06+06+09+24	Non Duct	Non Duct	Non Duct	Duct	Non Duct	4900	4900	4900	7000	19200	40900 (12600-40500)	4550 (1030-4550)	22.10	19.98	99
06+06+06+12+12	Non Duct	Non Duct	Non Duct	Non Duct	Non Duct	5900	5900	5900	11800	11800	41300 (12600-41000)	4800 (1010-4800)	23.31	21.08	99
06+06+06+12+12	Non Duct	Non Duct	Non Duct	Non Duct	Duct	5800	5800	5800	11500	11300	40200 (12600-40000)	4600 (1030-4600)	22.34	20.20	99
06+06+06+12+12	Non Duct	Non Duct	Non Duct	Duct	Duct	5600	5600	5600	10700	10700	38200 (12600-38000)	4400 (1050-4400)	21.37	19.32	99
06+06+06+12+15	Non Duct	Non Duct	Non Duct	Non Duct	Non Duct	5600	5600	5600	11100	13900	41800 (12600-41500)	4900 (1010-4900)	23.80	21.52	99
06+06+06+12+15	Non Duct	Non Duct	Non Duct	Non Duct	Duct	5500	5500	5500	10900	13300	40700 (12600-40500)	4700 (1030-4700)	22.82	20.64	99
06+06+06+12+15	Non Duct	Non Duct	Non Duct	Duct	Non Duct	5500	5500	5500	10600	13600	40700 (12600-40500)	4700 (1030-4700)	22.82	20.64	99
06+06+06+12+15	Non Duct	Non Duct	Non Duct	Duct	Duct	5500	5500	5500	10400	13000	39900 (12600-39500)	4500 (1050-4500)	21.85	19.76	99
06+06+06+12+18	Non Duct	Non Duct	Non Duct	Non Duct	Non Duct	5200	5200	5200	10400	15600	41600 (12600-41500)	4850 (1010-4850)	23.55	21.30	99
06+06+06+12+18	Non Duct	Non Duct	Non Duct	Non Duct	Duct	5200	5200	5200	10200	15000	40800 (12600-40500)	4650 (1030-4650)	22.58	20.42	99
06+06+06+12+18	Non Duct	Non Duct	Non Duct	Duct	Non Duct	5200	5200	5200	10000	15300	40900 (12600-40500)	4650 (1030-4650)	22.58	20.42	99
06+06+06+12+18	Non Duct	Non Duct	Non Duct	Duct	Duct	5100	5100	5100	9700	14700	39700 (12600-39500)	4450 (1050-4450)	21.61	19.54	99
06+06+06+15+15	Non Duct	Non Duct	Non Duct	Non Duct	Non Duct	5200	5200	5200	13000	13000	41600 (12600-41500)	4850 (1010-4850)	23.55	21.30	99
06+06+06+15+15	Non Duct	Non Duct	Non Duct	Non Duct	Duct	5200	5200	5200	12800	12500	40900 (12600-40500)	4650 (1030-4650)	22.58	20.42	99
06+06+06+15+15	Non Duct	Non Duct	Non Duct	Duct	Duct	5100	5100	5100	12200	12200	39700 (12600-39500)	4450 (1050-4450)	21.61	19.54	99
06+06+06+15+18	Non Duct	Non Duct	Non Duct	Non Duct	Non Duct	4900	4900	4900	12300	14700	41700 (12600-41500)	4750 (1010-4750)	23.07	20.86	99
06+06+06+15+18	Non Duct	Non Duct	Non Duct	Non Duct	Duct	4900	4900	4900	12000	14100	40800 (12600-40500)	4550 (1030-4550)	22.10	19.98	99
06+06+06+15+18	Non Duct	Non Duct	Non Duct	Duct	Non Duct	4900	4900	4900	11800	14400	40900 (12600-40500)	4550 (1030-4550)	22.10	19.98	99
06+06+06+15+18	Non Duct	Non Duct	Non Duct	Duct	Duct	4800	4800	4800	11500	13800	39700 (12600-39500)	4350 (1050-4350)	21.12	19.10	99
06+06+09+09+09	Non Duct	Non Duct	Non Duct	Non Duct	Non Duct	6300	6300	9400	9400	9400	40800 (12600-40500)	4850 (1010-4850)	23.55	21.30	99
06+06+09+09+09	Non Duct	Non Duct	Non Duct	Non Duct	Duct	6200	6200	9200	9200	9000	39800 (12600-39500)	4650 (1030-4650)	22.58	20.42	99
06+06+09+09+09	Non Duct	Non Duct	Non Duct	Duct	Duct	6100	6100	9100	8700	8700	38700 (12600-38500)	4450 (1050-4450)	21.61	19.54	99
06+06+09+09+09	Non Duct	Non Duct	Duct	Duct	Duct	6100	6100	8500	8500	8500	37700 (12600-37500)	4250 (1070-4250)	20.64	18.66	99
06+06+09+09+12	Non Duct	Non Duct	Non Duct	Non Duct	Non Duct	5900	5900	8800	8800	11800	41200 (12600-41000)	4800 (1010-4800)	23.31	21.08	99
06+06+09+09+12	Non Duct	Non Duct	Non Duct	Non Duct	Duct	5800	5800	8700	8700	11300	40300 (12600-40000)	4600 (1030-4600)	22.34	20.20	99
06+06+09+09+12	Non Duct	Non Duct	Non Duct	Duct	Non Duct	5800	5800	8700	8400	11500	40200 (12600-40000)	4600 (1030-4600)	22.34	20.20	99
06+06+09+09+12	Non Duct	Non Duct	Non Duct	Duct	Duct	5800	5800	8500	8200	11000	39300 (12600-39000)	4400 (1050-4400)	21.37	19.32	99
06+06+09+09+12	Non Duct	Non Duct	Duct	Duct	Non Duct	5800	5800	8200	8200	11300	39300 (12600-39000)	4400 (1050-4400)	21.37	19.32	99

MXZ-5B42NA COOLING

Indoor units combination	Indoor type					Cooling Capacity (BTU/h)						Outdoor unit power consumption (W)	Current (A)	Current (A)	Power factor (%)
	Unit A	Unit B	Unit C	Unit D	Unit E	Unit A	Unit B	Unit C	Unit D	Unit E	Total		208V	230V	
06+06+09+09+12	Non Duct	Non Duct	Duct	Duct	Duct	5800	5800	8000	8000	10700	38300 (12600-38000)	4200 (1070-4200)	20.40	18.45	99
06+06+09+09+15	Non Duct	Non Duct	Non Duct	Non Duct	Non Duct	5600	5600	8300	8300	13900	41700 (12600-41500)	4900 (1010-4900)	23.80	21.52	99
06+06+09+09+15	Non Duct	Non Duct	Non Duct	Non Duct	Duct	5500	5500	8200	8200	13300	40700 (12600-40500)	4700 (1030-4700)	22.82	20.64	99
06+06+09+09+15	Non Duct	Non Duct	Non Duct	Duct	Non Duct	5500	5500	8200	7900	13600	40700 (12600-40500)	4700 (1030-4700)	22.82	20.64	99
06+06+09+09+15	Non Duct	Non Duct	Non Duct	Duct	Duct	5500	5500	8100	7700	13000	39800 (12600-39500)	4500 (1050-4500)	21.85	19.76	99
06+06+09+09+15	Non Duct	Non Duct	Duct	Duct	Non Duct	5500	5500	7700	7700	13400	39800 (12600-39500)	4500 (1050-4500)	21.85	19.76	99
06+06+09+09+15	Non Duct	Non Duct	Duct	Duct	Duct	5500	5500	7500	7500	12700	38700 (12600-38500)	4300 (1070-4300)	20.88	18.88	99
06+06+09+09+18	Non Duct	Non Duct	Non Duct	Non Duct	Non Duct	5200	5200	7800	7800	15600	41600 (12600-41500)	4850 (1010-4850)	23.55	21.30	99
06+06+09+09+18	Non Duct	Non Duct	Non Duct	Non Duct	Duct	5200	5200	7700	7700	15000	40800 (12600-40500)	4650 (1030-4650)	22.58	20.42	99
06+06+09+09+18	Non Duct	Non Duct	Non Duct	Duct	Non Duct	5200	5200	7700	7400	15300	40800 (12600-40500)	4650 (1030-4650)	22.58	20.42	99
06+06+09+09+18	Non Duct	Non Duct	Non Duct	Duct	Duct	5100	5100	7600	7300	14700	39800 (12600-39500)	4450 (1050-4450)	21.61	19.54	99
06+06+09+09+18	Non Duct	Non Duct	Duct	Duct	Non Duct	5100	5100	7300	7300	15000	39800 (12600-39500)	4450 (1050-4450)	21.61	19.54	99
06+06+09+09+18	Non Duct	Non Duct	Duct	Duct	Duct	5200	5200	7100	7100	14300	38900 (12600-38500)	4250 (1070-4250)	20.64	18.66	99
06+06+09+12+12	Non Duct	Non Duct	Non Duct	Non Duct	Non Duct	5600	5600	8300	11100	11100	41700 (12600-41500)	4900 (1010-4900)	23.80	21.52	99
06+06+09+12+12	Non Duct	Non Duct	Non Duct	Non Duct	Duct	5500	5500	8200	10900	10600	40700 (12600-40500)	4700 (1030-4700)	22.82	20.64	99
06+06+09+12+12	Non Duct	Non Duct	Non Duct	Duct	Duct	5500	5500	8100	10400	10400	39900 (12600-39500)	4500 (1050-4500)	21.85	19.76	99
06+06+09+12+12	Non Duct	Non Duct	Duct	Non Duct	Non Duct	5500	5500	7900	10900	10900	40700 (12600-40500)	4700 (1030-4700)	22.82	20.64	99
06+06+09+12+12	Non Duct	Non Duct	Duct	Non Duct	Duct	5500	5500	7700	10700	10400	39800 (12600-39500)	4500 (1050-4500)	21.85	19.76	99
06+06+09+12+12	Non Duct	Non Duct	Duct	Duct	Duct	5500	5500	7500	10100	10100	38700 (12600-38500)	4300 (1070-4300)	20.88	18.88	99
06+06+09+12+15	Non Duct	Non Duct	Non Duct	Non Duct	Non Duct	5200	5200	7800	10400	13000	41600 (12600-41500)	4850 (1010-4850)	23.55	21.30	99
06+06+09+12+15	Non Duct	Non Duct	Non Duct	Non Duct	Duct	5200	5200	7700	10200	12500	40800 (12600-40500)	4650 (1030-4650)	22.58	20.42	99
06+06+09+12+15	Non Duct	Non Duct	Non Duct	Duct	Non Duct	5200	5200	7700	10000	12800	40900 (12600-40500)	4650 (1030-4650)	22.58	20.42	99
06+06+09+12+15	Non Duct	Non Duct	Non Duct	Duct	Duct	5100	5100	7600	9700	12200	39700 (12600-39500)	4450 (1050-4450)	21.61	19.54	99
06+06+09+12+15	Non Duct	Non Duct	Duct	Non Duct	Non Duct	5200	5200	7400	10200	12800	40800 (12600-40500)	4650 (1030-4650)	22.58	20.42	99
06+06+09+12+15	Non Duct	Non Duct	Duct	Non Duct	Duct	5100	5100	7300	10100	12200	39800 (12600-39500)	4450 (1050-4450)	21.61	19.54	99
06+06+09+12+15	Non Duct	Non Duct	Duct	Duct	Non Duct	5100	5100	7300	9700	12500	39700 (12600-39500)	4450 (1050-4450)	21.61	19.54	99
06+06+09+12+15	Non Duct	Non Duct	Duct	Duct	Duct	5200	5200	7100	9500	11900	38900 (12600-38500)	4250 (1070-4250)	20.64	18.66	99
06+06+09+12+18	Non Duct	Non Duct	Non Duct	Non Duct	Non Duct	4900	4900	7400	9800	14700	41700 (12600-41500)	4750 (1010-4750)	23.07	20.86	99
06+06+09+12+18	Non Duct	Non Duct	Non Duct	Non Duct	Duct	4900	4900	7200	9600	14100	40700 (12600-40500)	4550 (1030-4550)	22.10	19.98	99
06+06+09+12+18	Non Duct	Non Duct	Non Duct	Duct	Non Duct	4900	4900	7200	9400	14400	40800 (12600-40500)	4550 (1030-4550)	22.10	19.98	99
06+06+09+12+18	Non Duct	Non Duct	Non Duct	Duct	Duct	4800	4800	7200	9100	13800	39700 (12600-39500)	4350 (1050-4350)	21.12	19.10	99
06+06+09+12+18	Non Duct	Non Duct	Duct	Non Duct	Non Duct	4900	4900	7000	9600	14400	40800 (12600-40500)	4550 (1030-4550)	22.10	19.98	99
06+06+09+12+18	Non Duct	Non Duct	Duct	Non Duct	Duct	4800	4800	6800	9500	13800	39700 (12600-39500)	4350 (1050-4350)	21.12	19.10	99
06+06+09+12+18	Non Duct	Non Duct	Duct	Duct	Non Duct	4800	4800	6800	9100	14100	39600 (12600-39500)	4350 (1050-4350)	21.12	19.10	99
06+06+09+12+18	Non Duct	Non Duct	Duct	Duct	Duct	4900	4900	6600	8900	13400	38700 (12600-38500)	4150 (1070-4150)	20.15	18.23	99
06+06+09+15+15	Non Duct	Non Duct	Non Duct	Non Duct	Non Duct	5100	5100	7600	12600	12600	43000 (12600-42600)	4750 (1010-4750)	23.07	20.86	99
06+06+09+15+15	Non Duct	Non Duct	Non Duct	Non Duct	Duct	5000	5000	7400	12300	12100	41800 (12600-41600)	4550 (1030-4550)	22.10	19.98	99
06+06+09+15+15	Non Duct	Non Duct	Non Duct	Duct	Duct	5000	5000	7300	11800	11800	40900 (12600-40600)	4350 (1050-4350)	21.12	19.10	99
06+06+09+15+15	Non Duct	Non Duct	Duct	Non Duct	Non Duct	5000	5000	7200	12300	12300	41800 (12600-41600)	4550 (1030-4550)	22.10	19.98	99
06+06+09+15+15	Non Duct	Non Duct	Duct	Non Duct	Duct	5000	5000	7000	12100	11800	40900 (12600-40600)	4350 (1050-4350)	21.12	19.10	99
06+06+09+15+15	Non Duct	Non Duct	Duct	Duct	Duct	5000	5000	6800	11500	11500	39800 (12600-39600)	4150 (1070-4150)	20.15	18.23	99
06+06+12+12+12	Non Duct	Non Duct	Non Duct	Non Duct	Non Duct	5200	5200	10400	10400	10400	41600 (12600-41500)	4850 (1010-4850)	23.55	21.30	99
06+06+12+12+12	Non Duct	Non Duct	Non Duct	Non Duct	Duct	5200	5200	10200	10200	10000	40800 (12600-40500)	4650 (1030-4650)	22.58	20.42	99
06+06+12+12+12	Non Duct	Non Duct	Non Duct	Duct	Duct	5100	5100	10100	9700	9700	39700 (12600-39500)	4450 (1050-4450)	21.61	19.54	99
06+06+12+12+12	Non Duct	Non Duct	Duct	Duct	Duct	5200	5200	9500	9500	9500	38900 (12600-38500)	4250 (1070-4250)	20.64	18.66	99
06+06+12+12+15	Non Duct	Non Duct	Non Duct	Non Duct	Non Duct	4900	4900	9800	9800	12300	41700 (12600-41500)	4750 (1010-4750)	23.07	20.86	99
06+06+12+12+15	Non Duct	Non Duct	Non Duct	Non Duct	Duct	4900	4900	9600	9600	11800	40800 (12600-40500)	4550 (1030-4550)	22.10	19.98	99
06+06+12+12+15	Non Duct	Non Duct	Non Duct	Duct	Non Duct	4900	4900	9600	9400	12000	40800 (12600-40500)	4550 (1030-4550)	22.10	19.98	99
06+06+12+12+15	Non Duct	Non Duct	Non Duct	Duct	Duct	4800	4800	9500	9100	11500	39700 (12600-39500)	4350 (1050-4350)	21.12	19.10	99
06+06+12+12+15	Non Duct	Non Duct	Duct	Duct	Non Duct	4800	4800	9100	9100	11800	39600 (12600-39500)	4350 (1050-4350)	21.12	19.10	99
06+06+12+12+15	Non Duct	Non Duct	Duct	Duct	Duct	4900	4900	8900	8900	11200	38800 (12600-38500)	4150 (1070-4150)	20.15	18.23	99

MXZ-5B42NA COOLING

Indoor units combination	Indoor type					Cooling Capacity (BTU/h)						Outdoor unit power consumption (W)	Current (A)	Current (A)	Power factor (%)
	Unit A	Unit B	Unit C	Unit D	Unit E	Unit A	Unit B	Unit C	Unit D	Unit E	Total		208V	230V	
06+09+09+09+09	Non Duct	Non Duct	Non Duct	Non Duct	Non Duct	5800	8750	8750	8750	8750	40800 (12600-43000)	4800 (1010-4800)	23.31	21.08	99
06+09+09+09+09	Non Duct	Non Duct	Non Duct	Non Duct	Duct	5800	8600	8600	8600	8400	40000 (12600-39800)	4600 (1030-4600)	22.34	20.20	99
06+09+09+09+09	Non Duct	Non Duct	Non Duct	Duct	Duct	5700	8500	8500	8200	8200	39100 (12600-38800)	4400 (1050-4400)	21.37	19.32	99
06+09+09+09+09	Non Duct	Non Duct	Duct	Duct	Duct	5700	8400	7900	7900	7900	37800 (12600-37800)	4200 (1070-4200)	20.40	18.45	99
06+09+09+09+09	Non Duct	Duct	Duct	Duct	Duct	6100	7700	7700	7700	7700	36900 (12600-36800)	4000 (1090-4000)	19.43	17.57	99
06+09+09+09+12	Non Duct	Non Duct	Non Duct	Non Duct	Non Duct	5600	8300	8300	8300	11100	41600 (12600-41500)	4900 (1010-4900)	23.80	21.52	99
06+09+09+09+12	Non Duct	Non Duct	Non Duct	Non Duct	Duct	5500	8200	8200	8200	10600	40700 (12600-40500)	4700 (1030-4700)	22.82	20.64	99
06+09+09+09+12	Non Duct	Non Duct	Non Duct	Duct	Non Duct	5500	8200	8200	7900	10900	40700 (12600-40500)	4700 (1030-4700)	22.82	20.64	99
06+09+09+09+12	Non Duct	Non Duct	Non Duct	Duct	Duct	5500	8100	8100	7700	10400	39800 (12600-39500)	4500 (1050-4500)	21.85	19.76	99
06+09+09+09+12	Non Duct	Non Duct	Duct	Duct	Non Duct	5500	8100	7700	7700	10700	39700 (12600-39500)	4500 (1050-4500)	21.85	19.76	99
06+09+09+09+12	Non Duct	Non Duct	Duct	Duct	Duct	5500	8000	7500	7500	10100	38600 (12600-38500)	4300 (1070-4300)	20.88	18.88	99
06+09+09+09+12	Non Duct	Duct	Duct	Duct	Non Duct	5500	7500	7500	7500	10600	38600 (12600-38500)	4300 (1070-4300)	20.88	18.88	99
06+09+09+09+12	Non Duct	Duct	Duct	Duct	Duct	5800	7300	7300	7300	9800	37500 (12600-37500)	4100 (1090-4100)	19.91	18.01	99
06+09+09+09+15	Non Duct	Non Duct	Non Duct	Non Duct	Non Duct	5200	7800	7800	7800	13000	41600 (12600-41500)	4850 (1010-4850)	23.55	21.30	99
06+09+09+09+15	Non Duct	Non Duct	Non Duct	Non Duct	Duct	5200	7700	7700	7700	12500	40800 (12600-40500)	4650 (1030-4650)	22.58	20.42	99
06+09+09+09+15	Non Duct	Non Duct	Non Duct	Duct	Non Duct	5200	7700	7700	7400	12800	40800 (12600-40500)	4650 (1030-4650)	22.58	20.42	99
06+09+09+09+15	Non Duct	Non Duct	Non Duct	Duct	Duct	5100	7600	7600	7300	12200	39800 (12600-39500)	4450 (1050-4450)	21.61	19.54	99
06+09+09+09+15	Non Duct	Non Duct	Duct	Duct	Non Duct	5100	7600	7300	7300	12500	39800 (12600-39500)	4450 (1050-4450)	21.61	19.54	99
06+09+09+09+15	Non Duct	Non Duct	Duct	Duct	Duct	5200	7600	7100	7100	11900	38900 (12600-38500)	4250 (1070-4250)	20.64	18.66	99
06+09+09+09+15	Non Duct	Duct	Duct	Duct	Non Duct	5200	7100	7100	7100	12400	38900 (12600-38500)	4250 (1070-4250)	20.64	18.66	99
06+09+09+09+15	Non Duct	Duct	Duct	Duct	Duct	5500	6900	6900	6900	11600	37800 (12600-37500)	4050 (1090-4050)	19.67	17.79	99
06+09+09+09+18	Non Duct	Non Duct	Non Duct	Non Duct	Non Duct	4900	7400	7400	7400	14700	41800 (12600-41500)	4750 (1010-4750)	23.07	20.86	99
06+09+09+09+18	Non Duct	Non Duct	Non Duct	Non Duct	Duct	4900	7200	7200	7200	14100	40600 (12600-40500)	4550 (1030-4550)	22.10	19.98	99
06+09+09+09+18	Non Duct	Non Duct	Non Duct	Duct	Non Duct	4900	7200	7200	7000	14400	40700 (12600-40500)	4550 (1030-4550)	22.10	19.98	99
06+09+09+09+18	Non Duct	Non Duct	Non Duct	Duct	Duct	4800	7200	7200	6800	13800	39800 (12600-39500)	4350 (1050-4350)	21.12	19.10	99
06+09+09+09+18	Non Duct	Non Duct	Duct	Duct	Non Duct	4800	7200	6800	6800	14100	39700 (12600-39500)	4350 (1050-4350)	21.12	19.10	99
06+09+09+09+18	Non Duct	Non Duct	Duct	Duct	Duct	4900	7100	6600	6600	13400	38600 (12600-38500)	4150 (1070-4150)	20.15	18.23	99
06+09+09+09+18	Non Duct	Duct	Duct	Duct	Non Duct	4900	6600	6600	6600	13900	38600 (12600-38500)	4150 (1070-4150)	20.15	18.23	99
06+09+09+09+18	Non Duct	Duct	Duct	Duct	Duct	5300	6500	6500	6500	13100	37900 (12600-37500)	3950 (1090-3950)	19.18	17.35	99
06+09+09+12+12	Non Duct	Non Duct	Non Duct	Non Duct	Non Duct	5200	7800	7800	10400	10400	41600 (12600-41500)	4850 (1010-4850)	23.55	21.30	99
06+09+09+12+12	Non Duct	Non Duct	Non Duct	Non Duct	Duct	5200	7700	7700	10200	10000	40800 (12600-40500)	4650 (1030-4650)	22.58	20.42	99
06+09+09+12+12	Non Duct	Non Duct	Non Duct	Duct	Duct	5100	7600	7600	9700	9700	39700 (12600-39500)	4450 (1050-4450)	21.61	19.54	99
06+09+09+12+12	Non Duct	Non Duct	Duct	Non Duct	Non Duct	5200	7700	7400	10200	10200	40700 (12600-40500)	4650 (1030-4650)	22.58	20.42	99
06+09+09+12+12	Non Duct	Non Duct	Duct	Non Duct	Duct	5100	7600	7300	10100	9700	39800 (12600-39500)	4450 (1050-4450)	21.61	19.54	99
06+09+09+12+12	Non Duct	Non Duct	Duct	Duct	Duct	5200	7600	7100	9500	9500	38900 (12600-38500)	4250 (1070-4250)	20.64	18.66	99
06+09+09+12+12	Non Duct	Duct	Duct	Non Duct	Non Duct	5100	7300	7300	10100	10100	39900 (12600-39500)	4450 (1050-4450)	21.61	19.54	99
06+09+09+12+12	Non Duct	Duct	Duct	Non Duct	Duct	5200	7100	7100	10000	9500	38900 (12600-38500)	4250 (1070-4250)	20.64	18.66	99
06+09+09+12+12	Non Duct	Duct	Duct	Duct	Duct	5500	6900	6900	9200	9200	37700 (12600-37500)	4050 (1090-4050)	19.67	17.79	99
06+09+09+12+15	Non Duct	Non Duct	Non Duct	Non Duct	Non Duct	4900	7400	7400	9800	12300	41800 (12600-41500)	4750 (1010-4750)	23.07	20.86	99
06+09+09+12+15	Non Duct	Non Duct	Non Duct	Non Duct	Duct	4900	7200	7200	9600	11800	40700 (12600-40500)	4550 (1030-4550)	22.10	19.98	99
06+09+09+12+15	Non Duct	Non Duct	Non Duct	Duct	Non Duct	4900	7200	7200	9400	12000	40700 (12600-40500)	4550 (1030-4550)	22.10	19.98	99
06+09+09+12+15	Non Duct	Non Duct	Non Duct	Duct	Duct	4800	7200	7200	9100	11500	39800 (12600-39500)	4350 (1050-4350)	21.12	19.10	99
06+09+09+12+15	Non Duct	Non Duct	Duct	Non Duct	Non Duct	4900	7200	7000	9600	12000	40700 (12600-40500)	4550 (1030-4550)	22.10	19.98	99
06+09+09+12+15	Non Duct	Non Duct	Duct	Non Duct	Duct	4800	7200	6800	9500	11500	39800 (12600-39500)	4350 (1050-4350)	21.12	19.10	99
06+09+09+12+15	Non Duct	Non Duct	Duct	Duct	Non Duct	4800	7200	6800	9100	11800	39700 (12600-39500)	4350 (1050-4350)	21.12	19.10	99
06+09+09+12+15	Non Duct	Non Duct	Duct	Duct	Duct	4900	7100	6600	8900	11200	38700 (12600-38500)	4150 (1070-4150)	20.15	18.23	99
06+09+09+12+15	Non Duct	Duct	Duct	Non Duct	Non Duct	4800	6800	6800	9500	11800	39700 (12600-39500)	4350 (1050-4350)	21.12	19.10	99
06+09+09+12+15	Non Duct	Duct	Duct	Non Duct	Duct	4900	6600	6600	9400	11200	38700 (12600-38500)	4150 (1070-4150)	20.15	18.23	99
06+09+09+12+15	Non Duct	Duct	Duct	Duct	Non Duct	4900	6600	6600	8900	11700	38700 (12600-38500)	4150 (1070-4150)	20.15	18.23	99
06+09+09+12+15	Non Duct	Duct	Duct	Duct	Duct	5300	6500	6500	8700	10900	37900 (12600-37500)	3950 (1090-3950)	19.18	17.35	99
06+09+12+12+12	Non Duct	Non Duct	Non Duct	Non Duct	Non Duct	4900	7400	9800	9800	9800	41700 (12600-41500)	4750 (1010-4750)	23.07	20.86	99

MXZ-5B42NA COOLING

Indoor units combination	Indoor type					Cooling Capacity (BTU/h)						Outdoor unit power consumption (W)	Current (A)	Current (A)	Power factor (%)
	Unit A	Unit B	Unit C	Unit D	Unit E	Unit A	Unit B	Unit C	Unit D	Unit E	Total		208V	230V	
06+09+12+12+12	Non Duct	Non Duct	Non Duct	Non Duct	Duct	4900	7200	9600	9600	9400	40700 (12600-40500)	4550 (1030-4550)	22.10	19.98	99
06+09+12+12+12	Non Duct	Non Duct	Non Duct	Duct	Duct	4800	7200	9500	9100	9100	39700 (12600-39500)	4350 (1050-4350)	21.12	19.10	99
06+09+12+12+12	Non Duct	Non Duct	Duct	Duct	Duct	4900	7100	8900	8900	8900	38700 (12600-38500)	4150 (1070-4150)	20.15	18.23	99
06+09+12+12+12	Non Duct	Duct	Non Duct	Non Duct	Non Duct	4900	7000	9600	9600	9600	40700 (12600-40500)	4550 (1030-4550)	22.10	19.98	99
06+09+12+12+12	Non Duct	Duct	Non Duct	Non Duct	Duct	4800	6800	9500	9500	9100	39700 (12600-39500)	4350 (1050-4350)	21.12	19.10	99
06+09+12+12+12	Non Duct	Duct	Non Duct	Duct	Duct	4900	6600	9400	8900	8900	38700 (12600-38500)	4150 (1070-4150)	20.15	18.23	99
06+09+12+12+12	Non Duct	Duct	Duct	Duct	Duct	5300	6500	8700	8700	8700	37900 (12600-37500)	3950 (1090-3950)	19.18	17.35	99
09+09+09+09+09	Non Duct	Non Duct	Non Duct	Non Duct	Non Duct	8300	8300	8300	8300	8300	41500 (12600-41500)	4900 (1010-4900)	23.80	21.52	99
09+09+09+09+09	Non Duct	Non Duct	Non Duct	Non Duct	Duct	8400	8400	8400	8400	8200	41800 (12600-41600)	4700 (1030-4700)	22.82	20.64	99
09+09+09+09+09	Non Duct	Non Duct	Non Duct	Duct	Duct	8300	8300	8300	8000	8000	40900 (12600-40600)	4500 (1050-4500)	21.85	19.76	99
09+09+09+09+09	Non Duct	Non Duct	Duct	Duct	Duct	8300	8300	7800	7800	7800	40000 (12600-39600)	4300 (1070-4300)	20.88	18.88	99
09+09+09+09+09	Non Duct	Duct	Duct	Duct	Duct	8600	7600	7600	7600	7600	39000 (12600-38600)	4100 (1090-4100)	19.91	18.01	99
09+09+09+09+09	Duct	Duct	Duct	Duct	Duct	7440	7440	7440	7440	7440	37200 (12600-41000)	3960 (1110-3960)	19.23	17.39	99
09+09+09+09+12	Non Duct	Non Duct	Non Duct	Non Duct	Non Duct	7800	7800	7800	7800	10400	41600 (12600-41500)	4850 (1010-4850)	23.55	21.30	99
09+09+09+09+12	Non Duct	Non Duct	Non Duct	Non Duct	Duct	7700	7700	7700	7700	10000	40800 (12600-40500)	4650 (1030-4650)	22.58	20.42	99
09+09+09+09+12	Non Duct	Non Duct	Non Duct	Duct	Non Duct	7700	7700	7700	7400	10200	40700 (12600-40500)	4650 (1030-4650)	22.58	20.42	99
09+09+09+09+12	Non Duct	Non Duct	Non Duct	Duct	Duct	7600	7600	7600	7300	9700	39800 (12600-39500)	4450 (1050-4450)	21.61	19.54	99
09+09+09+09+12	Non Duct	Non Duct	Duct	Duct	Non Duct	7600	7600	7300	7300	10100	39900 (12600-39500)	4450 (1050-4450)	21.61	19.54	99
09+09+09+09+12	Non Duct	Non Duct	Duct	Duct	Duct	7600	7600	7100	7100	9500	38900 (12600-38500)	4250 (1070-4250)	20.64	18.66	99
09+09+09+09+12	Non Duct	Duct	Duct	Duct	Non Duct	7600	7100	7100	7100	10000	38900 (12600-38500)	4250 (1070-4250)	20.64	18.66	99
09+09+09+09+12	Non Duct	Duct	Duct	Duct	Duct	7900	6900	6900	6900	9200	37800 (12600-37500)	4050 (1090-4050)	19.67	17.79	99
09+09+09+09+12	Duct	Duct	Duct	Duct	Non Duct	6900	6900	6900	6900	10200	37800 (12600-37500)	4050 (1090-4050)	19.67	17.79	99
09+09+09+09+12	Duct	Duct	Duct	Duct	Duct	6900	6900	6900	6900	9200	36800 (12600-37500)	3850 (1110-3850)	18.70	16.91	99
09+09+09+09+15	Non Duct	Non Duct	Non Duct	Non Duct	Non Duct	7400	7400	7400	7400	12300	41900 (12600-41500)	4750 (1010-4750)	23.07	20.86	99
09+09+09+09+15	Non Duct	Non Duct	Non Duct	Non Duct	Duct	7200	7200	7200	7200	11800	40600 (12600-40500)	4550 (1030-4550)	22.10	19.98	99
09+09+09+09+15	Non Duct	Non Duct	Non Duct	Duct	Non Duct	7200	7200	7200	7000	12000	40600 (12600-40500)	4550 (1030-4550)	22.10	19.98	99
09+09+09+09+15	Non Duct	Non Duct	Non Duct	Duct	Duct	7200	7200	7200	6800	11500	39900 (12600-39500)	4350 (1050-4350)	21.12	19.10	99
09+09+09+09+15	Non Duct	Non Duct	Duct	Duct	Non Duct	7200	7200	6800	6800	11800	39800 (12600-39500)	4350 (1050-4350)	21.12	19.10	99
09+09+09+09+15	Non Duct	Non Duct	Duct	Duct	Duct	7100	7100	6600	6600	11200	38600 (12600-38500)	4150 (1070-4150)	20.15	18.23	99
09+09+09+09+15	Non Duct	Duct	Duct	Duct	Non Duct	7100	6600	6600	6600	11700	38600 (12600-38500)	4150 (1070-4150)	20.15	18.23	99
09+09+09+09+15	Non Duct	Duct	Duct	Duct	Duct	7500	6500	6500	6500	10900	37900 (12600-37500)	3950 (1090-3950)	19.18	17.35	99
09+09+09+09+15	Duct	Duct	Duct	Duct	Non Duct	6500	6500	6500	6500	11900	37900 (12600-37500)	3950 (1090-3950)	19.18	17.35	99
09+09+09+09+15	Duct	Duct	Duct	Duct	Duct	6500	6500	6500	6500	10900	36900 (12600-37500)	4750 (1110-4750)	23.07	20.86	99
09+09+09+12+12	Non Duct	Non Duct	Non Duct	Non Duct	Non Duct	7400	7400	7400	9800	9800	41800 (12600-41500)	4750 (1010-4750)	23.07	20.86	99
09+09+09+12+12	Non Duct	Non Duct	Non Duct	Non Duct	Duct	7200	7200	7200	9600	9400	40600 (12600-40500)	4550 (1030-4550)	22.10	19.98	99
09+09+09+12+12	Non Duct	Non Duct	Non Duct	Duct	Duct	7200	7200	7200	9100	9100	39800 (12600-39500)	4350 (1050-4350)	21.12	19.10	99
09+09+09+12+12	Non Duct	Non Duct	Duct	Non Duct	Non Duct	7200	7200	7000	9600	9600	40600 (12600-40500)	4550 (1030-4550)	22.10	19.98	99
09+09+09+12+12	Non Duct	Non Duct	Duct	Non Duct	Duct	7200	7200	6800	9500	9100	39800 (12600-39500)	4350 (1050-4350)	21.12	19.10	99
09+09+09+12+12	Non Duct	Non Duct	Duct	Duct	Duct	7100	7100	6600	8900	8900	38600 (12600-38500)	4150 (1070-4150)	20.15	18.23	99
09+09+09+12+12	Non Duct	Duct	Duct	Non Duct	Non Duct	7200	6800	6800	9500	9500	39800 (12600-39500)	4350 (1050-4350)	21.12	19.10	99
09+09+09+12+12	Non Duct	Duct	Duct	Non Duct	Duct	7100	6600	6600	9400	8900	38600 (12600-38500)	4150 (1070-4150)	20.15	18.23	99
09+09+09+12+12	Non Duct	Duct	Duct	Duct	Duct	7500	6500	6500	8700	8700	37900 (12600-37500)	3950 (1090-3950)	19.18	17.35	99
09+09+09+12+12	Duct	Duct	Duct	Non Duct	Non Duct	6600	6600	6600	9400	9400	38600 (12600-38500)	4150 (1070-4150)	20.15	18.23	99
09+09+09+12+12	Duct	Duct	Duct	Non Duct	Duct	6500	6500	6500	9700	8700	37900 (12600-37500)	3950 (1090-3950)	19.18	17.35	99
09+09+09+12+12	Duct	Duct	Duct	Duct	Duct	6500	6500	6500	8700	8700	36900 (12600-37500)	3750 (1110-3750)	18.21	16.47	99

MXZ-5B42NA HEATING

Indoor units combination	Indoor type					Heating Capacity (BTU/h)						Outdoor unit power consumption (W)	Current (A)	Current (A)	Power factor (%)
	Unit A	Unit B	Unit C	Unit D	Unit E	Unit A	Unit B	Unit C	Unit D	Unit E	Total		208V	230V	
06	Non Duct					7800					7800 (6800-14400)	880 (860-1210)	4.27	3.86	99
09	Non Duct					10900					10900 (8600-15400)	970 (940-1340)	4.71	4.26	99
09	Duct					10500					10500 (8600-15400)	1030 (940-1340)	5.00	4.52	99
12	Non Duct					14400					14400 (8600-16400)	1230 (940-1490)	5.97	5.40	99
12	Duct					13200					13200 (8600-16400)	1290 (940-1490)	6.26	5.67	99
15	Non Duct					18000					18000 (8600-21100)	1810 (940-2480)	8.79	7.95	99
15	Duct					17600					17600 (8600-21100)	1870 (940-2480)	9.08	8.21	99
18	Non Duct					21600					21600 (8600-24900)	2680 (940-3610)	13.01	11.77	99
18	Duct					21200					21200 (8600-24900)	2740 (940-3610)	13.31	12.03	99
24	Non Duct					23200					23200 (8600-27800)	1760 (830-2290)	8.55	7.73	99
06+06	Non Duct	Non Duct				7800	7800				15600 (11000-31000)	1030 (750-2570)	5.00	4.52	99
06+09	Non Duct	Non Duct				7500	11300				18800 (11000-31000)	1310 (750-2570)	6.36	5.75	99
06+09	Non Duct	Duct				7900	10900				18800 (11000-31000)	1370 (750-2570)	6.65	6.02	99
06+12	Non Duct	Non Duct				7400	14800				22200 (11000-31000)	1690 (750-2570)	8.21	7.42	99
06+12	Non Duct	Duct				7600	13900				21500 (11000-31000)	1750 (750-2570)	8.50	7.69	99
06+15	Non Duct	Non Duct				7400	18500				25900 (11000-33000)	2090 (750-2810)	10.15	9.18	99
06+15	Non Duct	Duct				7800	18100				25900 (11000-33000)	2090 (750-2810)	10.15	9.18	99
06+18	Non Duct	Non Duct				6800	20300				27100 (11000-35000)	2210 (750-2930)	10.73	9.71	99
06+18	Non Duct	Duct				7200	19900				27100 (11000-35000)	2210 (750-2930)	10.73	9.71	99
06+24	Non Duct	Non Duct				5400	21600				27000 (11000-35000)	2150 (750-2870)	10.44	9.44	99
09+09	Non Duct	Non Duct				10900	10900				21800 (11000-31000)	1590 (750-2570)	7.72	6.98	99
09+09	Non Duct	Duct				11300	10500				21800 (11000-31000)	1650 (750-2570)	8.01	7.25	99
09+09	Duct	Duct				10500	10500				21000 (11000-31000)	1710 (750-2570)	8.30	7.51	99
09+12	Non Duct	Non Duct				10900	14500				25400 (11000-33000)	1990 (750-2810)	9.66	8.74	99
09+12	Non Duct	Duct				10900	13600				24500 (11000-33000)	1990 (750-2810)	9.66	8.74	99
09+12	Duct	Non Duct				10500	14900				25400 (11000-33000)	1990 (750-2810)	9.66	8.74	99
09+12	Duct	Duct				10100	13600				23700 (11000-33000)	1990 (750-2810)	9.66	8.74	99
09+15	Non Duct	Non Duct				10200	16900				27100 (11000-35000)	2210 (750-2930)	10.73	9.71	99
09+15	Non Duct	Duct				10600	16500				27100 (11000-35000)	2210 (750-2930)	10.73	9.71	99
09+15	Duct	Non Duct				9800	17300				27100 (11000-35000)	2210 (750-2930)	10.73	9.71	99
09+15	Duct	Duct				9800	16500				26300 (11000-35000)	2210 (750-2930)	10.73	9.71	99
09+18	Non Duct	Non Duct				9000	18000				27000 (11000-35000)	2210 (750-2930)	10.73	9.71	99
09+18	Non Duct	Duct				9400	17600				27000 (11000-35000)	2210 (750-2930)	10.73	9.71	99
09+18	Duct	Non Duct				8600	18400				27000 (11000-35000)	2210 (750-2930)	10.73	9.71	99
09+18	Duct	Duct				8600	17600				26200 (11000-35000)	2210 (750-2930)	10.73	9.71	99
09+24	Non Duct	Non Duct				7400	19700				27100 (11000-35000)	1990 (750-2750)	9.66	8.74	99
09+24	Duct	Non Duct				7000	20100				27100 (11000-35000)	1990 (750-2750)	9.66	8.74	99
12+12	Non Duct	Non Duct				13500	13500				27000 (11000-35000)	2210 (750-2930)	10.73	9.71	99
12+12	Non Duct	Duct				13900	13100				27000 (11000-35000)	2210 (750-2930)	10.73	9.71	99
12+12	Duct	Duct				13100	13100				26200 (11000-35000)	2210 (750-2930)	10.73	9.71	99
12+15	Non Duct	Non Duct				12000	15000				27000 (11000-35000)	2170 (750-2870)	10.54	9.53	99
12+15	Non Duct	Duct				12400	14600				27000 (11000-35000)	2170 (750-2870)	10.54	9.53	99
12+15	Duct	Non Duct				11600	15400				27000 (11000-35000)	2170 (750-2870)	10.54	9.53	99
12+15	Duct	Duct				11600	14600				26200 (11000-35000)	2170 (750-2870)	10.54	9.53	99
12+18	Non Duct	Non Duct				10800	16200				27000 (11000-35000)	2150 (750-2870)	10.44	9.44	99
12+18	Non Duct	Duct				11200	15800				27000 (11000-35000)	2150 (750-2870)	10.44	9.44	99
12+18	Duct	Non Duct				10400	16600				27000 (11000-35000)	2150 (750-2870)	10.44	9.44	99
12+18	Duct	Duct				10400	15800				26200 (11000-35000)	2150 (750-2870)	10.44	9.44	99
12+24	Non Duct	Non Duct				9000	18000				27000 (11000-35000)	1970 (750-2750)	9.57	8.65	99
12+24	Duct	Non Duct				8600	18400				27000 (11000-35000)	1970 (750-2750)	9.57	8.65	99
15+15	Non Duct	Non Duct				13500	13500				27000 (11000-35000)	2130 (750-2810)	10.34	9.35	99

MXZ-5B42NA HEATING

Indoor units combination	Indoor type					Heating Capacity (BTU/h)						Outdoor unit power consumption (W)	Current (A)	Current (A)	Power factor (%)
	Unit A	Unit B	Unit C	Unit D	Unit E	Unit A	Unit B	Unit C	Unit D	Unit E	Total		208V	230V	
15+15	Non Duct	Duct				13900	13100				27000 (11000-35000)	2130 (750-2810)	10.34	9.35	99
15+15	Duct	Duct				13100	13100				26200 (11000-35000)	2130 (750-2810)	10.34	9.35	99
15+18	Non Duct	Non Duct				12300	14800				27100 (11000-35000)	2120 (750-2810)	10.30	9.31	99
15+18	Non Duct	Duct				12700	14400				27100 (11000-35000)	2120 (750-2810)	10.30	9.31	99
15+18	Duct	Non Duct				11900	15200				27100 (11000-35000)	2120 (750-2810)	10.30	9.31	99
15+18	Duct	Duct				11900	14400				26300 (11000-35000)	2120 (750-2810)	10.30	9.31	99
15+24	Non Duct	Non Duct				10400	16700				27100 (11000-35000)	2110 (750-2810)	10.25	9.27	99
15+24	Duct	Non Duct				10000	17100				27100 (11000-35000)	2110 (750-2810)	10.25	9.27	99
18+18	Non Duct	Non Duct				13500	13500				27000 (11000-35000)	2110 (750-2810)	10.25	9.27	99
18+18	Non Duct	Duct				13900	13100				27000 (11000-35000)	2110 (750-2810)	10.25	9.27	99
18+18	Duct	Duct				13100	13100				26200 (11000-35000)	2110 (750-2810)	10.25	9.27	99
18+24	Non Duct	Non Duct				11600	15500				27100 (11000-35000)	2110 (750-2810)	10.25	9.27	99
18+24	Duct	Non Duct				11200	15900				27100 (11000-35000)	2110 (750-2810)	10.25	9.27	99
24+24	Non Duct	Non Duct				13500	13500				27000 (11000-35000)	2110 (750-2810)	10.25	9.27	99
06+06+06	Non Duct	Non Duct	Non Duct			7800	7800	7800			23400 (11400-36000)	1760 (750-2830)	8.55	7.73	99
06+06+09	Non Duct	Non Duct	Non Duct			7600	7600	11400			26600 (11400-36000)	1970 (750-2830)	9.57	8.65	99
06+06+09	Non Duct	Non Duct	Duct			7800	7800	11000			26600 (11400-35600)	1970 (750-2830)	9.57	8.65	99
06+06+12	Non Duct	Non Duct	Non Duct			7500	7500	15000			30000 (11400-36000)	2450 (750-2830)	11.90	10.76	99
06+06+12	Non Duct	Non Duct	Duct			7500	7500	14200			29200 (11400-36000)	2450 (750-2830)	11.90	10.76	99
06+06+15	Non Duct	Non Duct	Non Duct			7200	7200	18000			32400 (11400-36000)	2650 (750-2830)	12.87	11.64	99
06+06+15	Non Duct	Non Duct	Duct			7400	7400	17600			32400 (11400-36000)	2650 (750-2830)	12.87	11.64	99
06+06+18	Non Duct	Non Duct	Non Duct			6500	6500	19500			32500 (11400-36000)	2650 (750-2830)	12.87	11.64	99
06+06+18	Non Duct	Non Duct	Duct			6700	6700	19100			32500 (11400-36000)	2650 (750-2830)	12.87	11.64	99
06+06+24	Non Duct	Non Duct	Non Duct			5400	5400	21600			32400 (11400-36000)	2650 (750-2830)	12.87	11.64	99
06+09+09	Non Duct	Non Duct	Non Duct			7400	11100	11100			29600 (11400-36000)	2370 (750-2830)	11.51	10.41	99
06+09+09	Non Duct	Non Duct	Duct			7600	11300	10700			29600 (11400-35600)	2370 (750-2830)	11.51	10.41	99
06+09+09	Non Duct	Duct	Duct			8200	10700	10700			29600 (11400-35200)	2370 (750-2830)	11.51	10.41	99
06+09+12	Non Duct	Non Duct	Non Duct			7200	10800	14400			32400 (11400-36000)	2650 (750-2830)	12.87	11.64	99
06+09+12	Non Duct	Non Duct	Duct			7400	11000	14000			32400 (11400-36000)	2650 (750-2830)	12.87	11.64	99
06+09+12	Non Duct	Duct	Non Duct			7400	10300	14500			32200 (11400-35600)	2650 (750-2830)	12.87	11.64	99
06+09+12	Non Duct	Duct	Duct			7900	10300	13800			32000 (11400-35600)	2650 (750-2830)	12.87	11.64	99
06+09+15	Non Duct	Non Duct	Non Duct			6500	9800	16200			32500 (11400-36000)	2650 (750-2830)	12.87	11.64	99
06+09+15	Non Duct	Non Duct	Duct			6700	10000	15800			32500 (11400-36000)	2650 (750-2830)	12.87	11.64	99
06+09+15	Non Duct	Duct	Non Duct			6600	9200	16200			32000 (11400-35600)	2650 (750-2830)	12.87	11.64	99
06+09+15	Non Duct	Duct	Duct			7200	9200	15600			32000 (11400-35600)	2650 (750-2830)	12.87	11.64	99
06+09+18	Non Duct	Non Duct	Non Duct			5900	8900	17700			32500 (11400-36000)	2650 (750-2830)	12.87	11.64	99
06+09+18	Non Duct	Non Duct	Duct			6100	9100	17300			32500 (11400-36000)	2650 (750-2830)	12.87	11.64	99
06+09+18	Non Duct	Duct	Non Duct			6100	8400	17700			32200 (11400-35600)	2650 (750-2830)	12.87	11.64	99
06+09+18	Non Duct	Duct	Duct			6700	8400	17100			32200 (11400-35600)	2650 (750-2830)	12.87	11.64	99
06+09+24	Non Duct	Non Duct	Non Duct			5000	7500	20000			32500 (11400-36000)	2650 (750-2830)	12.87	11.64	99
06+09+24	Non Duct	Duct	Non Duct			5200	7000	19900			32100 (11400-35600)	2650 (750-2830)	12.87	11.64	99
06+12+12	Non Duct	Non Duct	Non Duct			6500	13000	13000			32500 (11400-36000)	2650 (750-2830)	12.87	11.64	99
06+12+12	Non Duct	Non Duct	Duct			6700	13200	12600			32500 (11400-36000)	2650 (750-2830)	12.87	11.64	99
06+12+12	Non Duct	Duct	Duct			7300	12600	12600			32500 (11400-36000)	2650 (750-2830)	12.87	11.64	99
06+12+15	Non Duct	Non Duct	Non Duct			5900	11800	14800			32500 (11400-36000)	2650 (750-2830)	12.87	11.64	99
06+12+15	Non Duct	Non Duct	Duct			6100	12000	14400			32500 (11400-36000)	2650 (750-2830)	12.87	11.64	99
06+12+15	Non Duct	Duct	Non Duct			6100	11400	15000			32500 (11400-36000)	2650 (750-2830)	12.87	11.64	99
06+12+15	Non Duct	Duct	Duct			6700	11400	14400			32500 (11400-36000)	2650 (750-2830)	12.87	11.64	99
06+12+18	Non Duct	Non Duct	Non Duct			5400	10800	16200			32400 (11400-36000)	2650 (750-2830)	12.87	11.64	99
06+12+18	Non Duct	Non Duct	Duct			5600	11000	15800			32400 (11400-36000)	2650 (750-2830)	12.87	11.64	99
06+12+18	Non Duct	Duct	Non Duct			5600	10400	16400			32400 (11400-36000)	2650 (750-2830)	12.87	11.64	99

MXZ-5B42NA HEATING

Indoor units combination	Indoor type					Heating Capacity (BTU/h)						Outdoor unit power consumption (W)	Current (A)	Current (A)	Power factor (%)
	Unit A	Unit B	Unit C	Unit D	Unit E	Unit A	Unit B	Unit C	Unit D	Unit E	Total		208V	230V	
06+12+18	Non Duct	Duct	Duct			6200	10400	15800			32400 (11400-36000)	2650 (750-2830)	12.87	11.64	99
06+12+24	Non Duct	Non Duct	Non Duct			4700	9300	18600			32600 (11400-36000)	2650 (750-2830)	12.87	11.64	99
06+12+24	Non Duct	Duct	Non Duct			4900	8900	18800			32600 (11400-36000)	2650 (750-2830)	12.87	11.64	99
06+15+15	Non Duct	Non Duct	Non Duct			5400	13500	13500			32400 (11400-36000)	2650 (750-2830)	12.87	11.64	99
06+15+15	Non Duct	Non Duct	Duct			5600	13700	13100			32400 (11400-36000)	2650 (750-2830)	12.87	11.64	99
06+15+15	Non Duct	Duct	Duct			6200	13100	13100			32400 (11400-36000)	2650 (750-2830)	12.87	11.64	99
06+15+18	Non Duct	Non Duct	Non Duct			5000	12500	15000			32500 (11400-36000)	2650 (750-2830)	12.87	11.64	99
06+15+18	Non Duct	Non Duct	Duct			5200	12700	14600			32500 (11400-36000)	2650 (750-2830)	12.87	11.64	99
06+15+18	Non Duct	Duct	Non Duct			5200	12100	15200			32500 (11400-36000)	2650 (750-2830)	12.87	11.64	99
06+15+18	Non Duct	Duct	Duct			5800	12100	14600			32500 (11400-36000)	2650 (750-2830)	12.87	11.64	99
06+15+24	Non Duct	Non Duct	Non Duct			4400	10800	17300			32500 (11400-36000)	2650 (750-2830)	12.87	11.64	99
06+15+24	Non Duct	Duct	Non Duct			4600	10400	17500			32500 (11400-36000)	2650 (750-2830)	12.87	11.64	99
06+18+18	Non Duct	Non Duct	Non Duct			4700	13900	13900			32500 (11400-36000)	2650 (750-2830)	12.87	11.64	99
06+18+18	Non Duct	Non Duct	Duct			4900	14100	13500			32500 (11400-36000)	2650 (750-2830)	12.87	11.64	99
06+18+18	Non Duct	Duct	Duct			5500	13500	13500			32500 (11400-36000)	2650 (750-2830)	12.87	11.64	99
06+18+24	Non Duct	Non Duct	Non Duct			4100	12200	16200			32500 (11400-36000)	2650 (750-2830)	12.87	11.64	99
06+18+24	Non Duct	Duct	Non Duct			4300	11800	16400			32500 (11400-36000)	2650 (750-2830)	12.87	11.64	99
09+09+09	Non Duct	Non Duct	Non Duct			10800	10800	10800			32400 (11400-36000)	2650 (750-2830)	12.87	11.64	99
09+09+09	Non Duct	Non Duct	Duct			10900	10900	10300			32100 (11400-35600)	2650 (750-2830)	12.87	11.64	99
09+09+09	Non Duct	Duct	Duct			11400	10200	10200			31800 (11400-35200)	2650 (750-2830)	12.87	11.64	99
09+09+09	Duct	Duct	Duct			10000	10000	10000			30000 (11400-34800)	2650 (750-2830)	12.87	11.64	99
09+09+12	Non Duct	Non Duct	Non Duct			9800	9800	13000			32600 (11400-36000)	2650 (750-2830)	12.87	11.64	99
09+09+12	Non Duct	Non Duct	Duct			10000	10000	12600			32600 (11400-36000)	2650 (750-2830)	12.87	11.64	99
09+09+12	Non Duct	Duct	Non Duct			9800	9200	13000			32000 (11400-35600)	2650 (750-2830)	12.87	11.64	99
09+09+12	Non Duct	Duct	Duct			10400	9200	12400			32000 (11400-35600)	2650 (750-2830)	12.87	11.64	99
09+09+12	Duct	Duct	Non Duct			9100	9100	13500			31700 (11400-35200)	2650 (750-2830)	12.87	11.64	99
09+09+12	Duct	Duct	Duct			9100	9100	12300			30500 (11400-35200)	2650 (750-2830)	12.87	11.64	99
09+09+15	Non Duct	Non Duct	Non Duct			8900	8900	14800			32600 (11400-36000)	2650 (750-2830)	12.87	11.64	99
09+09+15	Non Duct	Non Duct	Duct			9100	9100	14400			32600 (11400-36000)	2650 (750-2830)	12.87	11.64	99
09+09+15	Non Duct	Duct	Non Duct			9000	8400	14800			32200 (11400-35600)	2650 (750-2830)	12.87	11.64	99
09+09+15	Non Duct	Duct	Duct			9600	8400	14200			32200 (11400-35600)	2650 (750-2830)	12.87	11.64	99
09+09+15	Duct	Duct	Non Duct			8300	8300	15200			31800 (11400-35200)	2650 (750-2830)	12.87	11.64	99
09+09+15	Duct	Duct	Duct			8300	8300	14000			30600 (11400-35200)	2650 (750-2830)	12.87	11.64	99
09+09+18	Non Duct	Non Duct	Non Duct			8100	8100	16200			32400 (11400-36000)	2650 (750-2830)	12.87	11.64	99
09+09+18	Non Duct	Non Duct	Duct			8300	8300	15800			32400 (11400-36000)	2650 (750-2830)	12.87	11.64	99
09+09+18	Non Duct	Duct	Non Duct			8200	7600	16200			32000 (11400-35600)	2650 (750-2830)	12.87	11.64	99
09+09+18	Non Duct	Duct	Duct			8800	7600	15600			32000 (11400-35600)	2650 (750-2830)	12.87	11.64	99
09+09+18	Duct	Duct	Non Duct			7500	7500	16600			31600 (11400-35200)	2650 (750-2830)	12.87	11.64	99
09+09+18	Duct	Duct	Duct			7500	7500	15400			30400 (11400-35200)	2650 (750-2830)	12.87	11.64	99
09+09+24	Non Duct	Non Duct	Non Duct			7000	7000	18600			32600 (11400-36000)	2650 (750-2830)	12.87	11.64	99
09+09+24	Non Duct	Duct	Non Duct			7100	6500	18500			32100 (11400-35600)	2650 (750-2830)	12.87	11.64	99
09+09+24	Duct	Duct	Non Duct			6400	6400	18900			31700 (11400-35200)	2650 (750-2830)	12.87	11.64	99
09+12+12	Non Duct	Non Duct	Non Duct			8900	11800	11800			32500 (11400-36000)	2650 (750-2830)	12.87	11.64	99
09+12+12	Non Duct	Non Duct	Duct			9100	12000	11400			32500 (11400-36000)	2650 (750-2830)	12.87	11.64	99
09+12+12	Non Duct	Duct	Duct			9700	11400	11400			32500 (11400-36000)	2650 (750-2830)	12.87	11.64	99
09+12+12	Duct	Non Duct	Non Duct			8400	11900	11900			32200 (11400-35600)	2650 (750-2830)	12.87	11.64	99
09+12+12	Duct	Non Duct	Duct			8400	12500	11300			32200 (11400-35600)	2650 (750-2830)	12.87	11.64	99
09+12+12	Duct	Duct	Duct			8400	11300	11300			31000 (11400-35600)	2650 (750-2830)	12.87	11.64	99
09+12+15	Non Duct	Non Duct	Non Duct			8100	10800	13500			32400 (11400-36000)	2650 (750-2830)	12.87	11.64	99
09+12+15	Non Duct	Non Duct	Duct			1100	1300	1000			3400 (11400-36000)	2650 (750-2830)	12.87	11.64	99
09+12+15	Non Duct	Duct	Non Duct			8300	10400	13700			32400 (11400-36000)	2650 (750-2830)	12.87	11.64	99

MXZ-5B42NA HEATING

Indoor units combination	Indoor type					Heating Capacity (BTU/h)						Outdoor unit power consumption (W)	Current (A)	Current (A)	Power factor (%)
	Unit A	Unit B	Unit C	Unit D	Unit E	Unit A	Unit B	Unit C	Unit D	Unit E	Total		208V	230V	
09+12+15	Non Duct	Duct	Duct			8900	10400	13100			32400 (11400-36000)	2650 (750-2830)	12.87	11.64	99
09+12+15	Duct	Non Duct	Non Duct			7600	10900	13600			32100 (11400-35600)	2650 (750-2830)	12.87	11.64	99
09+12+15	Duct	Non Duct	Duct			7600	11500	13000			32100 (11400-35600)	2650 (750-2830)	12.87	11.64	99
09+12+15	Duct	Duct	Non Duct			7600	10300	14200			32100 (11400-35600)	2650 (750-2830)	12.87	11.64	99
09+12+15	Duct	Duct	Duct			7600	10300	13000			30900 (11400-35600)	2650 (750-2830)	12.87	11.64	99
09+12+18	Non Duct	Non Duct	Non Duct			7500	10000	15000			32500 (11400-36000)	2650 (750-2830)	12.87	11.64	99
09+12+18	Non Duct	Non Duct	Duct			7700	10200	14600			32500 (11400-36000)	2650 (750-2830)	12.87	11.64	99
09+12+18	Non Duct	Duct	Non Duct			7700	9600	15200			32500 (11400-36000)	2650 (750-2830)	12.87	11.64	99
09+12+18	Non Duct	Duct	Duct			8300	9600	14600			32500 (11400-36000)	2650 (750-2830)	12.87	11.64	99
09+12+18	Duct	Non Duct	Non Duct			7000	10100	15000			32100 (11400-35600)	2650 (750-2830)	12.87	11.64	99
09+12+18	Duct	Non Duct	Duct			7000	10700	14400			32100 (11400-35600)	2650 (750-2830)	12.87	11.64	99
09+12+18	Duct	Duct	Non Duct			7000	9500	15600			32100 (11400-35600)	2650 (750-2830)	12.87	11.64	99
09+12+18	Duct	Duct	Duct			7000	9500	14400			30900 (11400-35600)	2650 (750-2830)	12.87	11.64	99
09+12+24	Non Duct	Non Duct	Non Duct			6500	8700	17300			32500 (11400-36000)	2650 (750-2830)	12.87	11.64	99
09+12+24	Non Duct	Duct	Non Duct			6700	8300	17500			32500 (11400-36000)	2650 (750-2830)	12.87	11.64	99
09+12+24	Duct	Non Duct	Non Duct			6100	8900	17500			32500 (11400-36000)	2650 (750-2830)	12.87	11.64	99
09+12+24	Duct	Duct	Non Duct			6000	8200	17900			32100 (11400-35600)	2650 (750-2830)	12.87	11.64	99
09+15+15	Non Duct	Non Duct	Non Duct			7500	12500	12500			32500 (11400-36000)	2650 (750-2830)	12.87	11.64	99
09+15+15	Non Duct	Non Duct	Duct			7700	12700	12100			32500 (11400-36000)	2650 (750-2830)	12.87	11.64	99
09+15+15	Non Duct	Duct	Duct			8300	12100	12100			32500 (11400-36000)	2650 (750-2830)	12.87	11.64	99
09+15+15	Duct	Non Duct	Non Duct			7000	12600	12600			32200 (11400-35600)	2650 (750-2830)	12.87	11.64	99
09+15+15	Duct	Non Duct	Duct			7000	13200	12000			32200 (11400-35600)	2650 (750-2830)	12.87	11.64	99
09+15+15	Duct	Duct	Duct			7000	12000	12000			31000 (11400-35600)	2650 (750-2830)	12.87	11.64	99
09+15+18	Non Duct	Non Duct	Non Duct			7000	11600	13900			32500 (11400-36000)	2650 (750-2830)	12.87	11.64	99
09+15+18	Non Duct	Non Duct	Duct			7200	11800	13500			32500 (11400-36000)	2650 (750-2830)	12.87	11.64	99
09+15+18	Non Duct	Duct	Non Duct			7200	11200	14100			32500 (11400-36000)	2650 (750-2830)	12.87	11.64	99
09+15+18	Non Duct	Duct	Duct			7800	11200	13500			32500 (11400-36000)	2650 (750-2830)	12.87	11.64	99
09+15+18	Duct	Non Duct	Non Duct			6500	11700	14000			32200 (11400-35600)	2650 (750-2830)	12.87	11.64	99
09+15+18	Duct	Non Duct	Duct			6500	12300	13400			32200 (11400-35600)	2650 (750-2830)	12.87	11.64	99
09+15+18	Duct	Duct	Non Duct			6500	11100	14600			32200 (11400-35600)	2650 (750-2830)	12.87	11.64	99
09+15+18	Duct	Duct	Duct			6600	11200	13500			31300 (11400-35600)	2650 (750-2830)	12.87	11.64	99
09+15+24	Non Duct	Non Duct	Non Duct			6100	10200	16200			32500 (11400-36000)	2650 (750-2830)	12.87	11.64	99
09+15+24	Non Duct	Duct	Non Duct			6300	9800	16400			32500 (11400-36000)	2650 (750-2830)	12.87	11.64	99
09+15+24	Duct	Non Duct	Non Duct			5700	10400	16400			32500 (11400-36000)	2650 (750-2830)	12.87	11.64	99
09+15+24	Duct	Duct	Non Duct			5600	9600	16800			32000 (11400-35600)	2650 (750-2830)	12.87	11.64	99
09+18+18	Non Duct	Non Duct	Non Duct			6500	13000	13000			32500 (11400-36000)	2650 (750-2830)	12.87	11.64	99
09+18+18	Non Duct	Non Duct	Duct			6700	13200	12600			32500 (11400-36000)	2650 (750-2830)	12.87	11.64	99
09+18+18	Non Duct	Duct	Duct			7200	12400	12400			32000 (11400-36000)	2650 (750-2830)	12.87	11.64	99
09+18+18	Duct	Non Duct	Non Duct			6000	13000	13000			32000 (11400-35600)	2650 (750-2830)	12.87	11.64	99
09+18+18	Duct	Non Duct	Duct			6000	13600	12400			32000 (11400-35600)	2650 (750-2830)	12.87	11.64	99
09+18+18	Duct	Duct	Duct			6000	12400	12400			30800 (11400-35600)	2650 (750-2830)	12.87	11.64	99
09+18+24	Non Duct	Non Duct	Non Duct			5800	11500	15300			32600 (11400-36000)	2650 (750-2830)	12.87	11.64	99
09+18+24	Non Duct	Duct	Non Duct			6000	11100	15500			32600 (11400-36000)	2650 (750-2830)	12.87	11.64	99
09+18+24	Duct	Non Duct	Non Duct			5400	11700	15500			32600 (11400-36000)	2650 (750-2830)	12.87	11.64	99
09+18+24	Duct	Duct	Non Duct			5300	10900	15900			32100 (11400-35600)	2650 (750-2830)	12.87	11.64	99
12+12+12	Non Duct	Non Duct	Non Duct			10800	10800	10800			32400 (11400-36000)	2650 (750-2830)	12.87	11.64	99
12+12+12	Non Duct	Non Duct	Duct			11000	11000	10400			32400 (11400-36000)	2650 (750-2830)	12.87	11.64	99
12+12+12	Non Duct	Duct	Duct			11600	10400	10400			32400 (11400-36000)	2650 (750-2830)	12.87	11.64	99
12+12+12	Duct	Duct	Duct			10400	10400	10400			31200 (11400-36000)	2650 (750-2830)	12.87	11.64	99
12+12+15	Non Duct	Non Duct	Non Duct			10000	10000	12500			32500 (11400-36000)	2650 (750-2830)	12.87	11.64	99
12+12+15	Non Duct	Non Duct	Duct			10200	10200	12100			32500 (11400-36000)	2650 (750-2830)	12.87	11.64	99

MXZ-5B42NA HEATING

Indoor units combination	Indoor type					Heating Capacity (BTU/h)						Outdoor unit power consumption (W)	Current (A)	Current (A)	Power factor (%)
	Unit A	Unit B	Unit C	Unit D	Unit E	Unit A	Unit B	Unit C	Unit D	Unit E	Total		208V	230V	
12+12+15	Non Duct	Duct	Non Duct			10200	9600	12700			32500 (11400-36000)	2650 (750-2830)	12.87	11.64	99
12+12+15	Non Duct	Duct	Duct			10800	9600	12100			32500 (11400-36000)	2650 (750-2830)	12.87	11.64	99
12+12+15	Duct	Duct	Non Duct			9600	9600	13300			32500 (11400-36000)	2650 (750-2830)	12.87	11.64	99
12+12+15	Duct	Duct	Duct			9600	9600	12100			31300 (11400-36000)	2650 (750-2830)	12.87	11.64	99
12+12+18	Non Duct	Non Duct	Non Duct			9300	9300	13900			32500 (11400-36000)	2650 (750-2830)	12.87	11.64	99
12+12+18	Non Duct	Non Duct	Duct			9500	9500	13500			32500 (11400-36000)	2650 (750-2830)	12.87	11.64	99
12+12+18	Non Duct	Duct	Non Duct			9500	8900	14100			32500 (11400-36000)	2650 (750-2830)	12.87	11.64	99
12+12+18	Non Duct	Duct	Duct			10100	8900	13500			32500 (11400-36000)	2650 (750-2830)	12.87	11.64	99
12+12+18	Duct	Duct	Non Duct			8900	8900	14700			32500 (11400-36000)	2650 (750-2830)	12.87	11.64	99
12+12+18	Duct	Duct	Duct			8900	8900	13500			31300 (11400-36000)	2650 (750-2830)	12.87	11.64	99
12+12+24	Non Duct	Non Duct	Non Duct			8100	8100	16200			32400 (11400-36000)	2650 (750-2830)	12.87	11.64	99
12+12+24	Non Duct	Duct	Non Duct			8300	7700	16400			32400 (11400-36000)	2650 (750-2830)	12.87	11.64	99
12+12+24	Duct	Duct	Non Duct			7600	7600	16800			32000 (11400-35600)	2650 (750-2830)	12.87	11.64	99
12+15+15	Non Duct	Non Duct	Non Duct			9300	11600	11600			32500 (11400-36000)	2650 (750-2830)	12.87	11.64	99
12+15+15	Non Duct	Non Duct	Duct			9500	11800	11200			32500 (11400-36000)	2650 (750-2830)	12.87	11.64	99
12+15+15	Non Duct	Duct	Duct			10000	11100	11100			32200 (11400-36000)	2650 (750-2830)	12.87	11.64	99
12+15+15	Duct	Non Duct	Non Duct			8800	11700	11700			32200 (11400-36000)	2650 (750-2830)	12.87	11.64	99
12+15+15	Duct	Non Duct	Duct			8800	12300	11100			32200 (11400-36000)	2650 (750-2830)	12.87	11.64	99
12+15+15	Duct	Duct	Duct			8900	11200	11200			31300 (11400-36000)	2650 (750-2830)	12.87	11.64	99
12+15+18	Non Duct	Non Duct	Non Duct			8700	10800	13000			32500 (11400-36000)	2650 (750-2830)	12.87	11.64	99
12+15+18	Non Duct	Non Duct	Duct			8900	11000	12600			32500 (11400-36000)	2650 (750-2830)	12.87	11.64	99
12+15+18	Non Duct	Duct	Non Duct			8900	10400	13200			32500 (11400-36000)	2650 (750-2830)	12.87	11.64	99
12+15+18	Non Duct	Duct	Duct			9400	10300	12400			32100 (11400-36000)	2650 (750-2830)	12.87	11.64	99
12+15+18	Duct	Non Duct	Non Duct			8200	10900	13000			32100 (11400-36000)	2650 (750-2830)	12.87	11.64	99
12+15+18	Duct	Non Duct	Duct			8200	11500	12400			32100 (11400-36000)	2650 (750-2830)	12.87	11.64	99
12+15+18	Duct	Duct	Non Duct			8200	10300	13600			32100 (11400-36000)	2650 (750-2830)	12.87	11.64	99
12+15+18	Duct	Duct	Duct			8300	10400	12600			31300 (11400-36000)	2650 (750-2830)	12.87	11.64	99
12+15+24	Non Duct	Non Duct	Non Duct			7700	9600	15300			32600 (11400-36000)	2650 (750-2830)	12.87	11.64	99
12+15+24	Non Duct	Duct	Non Duct			7900	9200	15500			32600 (11400-36000)	2650 (750-2830)	12.87	11.64	99
12+15+24	Duct	Non Duct	Non Duct			7300	9800	15500			32600 (11400-36000)	2650 (750-2830)	12.87	11.64	99
12+15+24	Duct	Duct	Non Duct			7200	9100	15900			32200 (11400-35600)	2650 (750-2830)	12.87	11.64	99
12+18+18	Non Duct	Non Duct	Non Duct			8100	12200	12200			32500 (11400-36000)	2650 (750-2830)	12.87	11.64	99
12+18+18	Non Duct	Non Duct	Duct			8300	12400	11800			32500 (11400-36000)	2650 (750-2830)	12.87	11.64	99
12+18+18	Non Duct	Duct	Duct			8800	11600	11600			32000 (11400-36000)	2650 (750-2830)	12.87	11.64	99
12+18+18	Duct	Non Duct	Non Duct			7600	12200	12200			32000 (11400-36000)	2650 (750-2830)	12.87	11.64	99
12+18+18	Duct	Non Duct	Duct			7600	12800	11600			32000 (11400-36000)	2650 (750-2830)	12.87	11.64	99
12+18+18	Duct	Duct	Duct			7700	11800	11800			31300 (11400-36000)	2650 (750-2830)	12.87	11.64	99
15+15+15	Non Duct	Non Duct	Non Duct			10800	10800	10800			32400 (11400-36000)	2650 (750-2830)	12.87	11.64	99
15+15+15	Non Duct	Non Duct	Duct			11000	11000	10400			32400 (11400-36000)	2650 (750-2830)	12.87	11.64	99
15+15+15	Non Duct	Duct	Duct			11600	10400	10400			32400 (11400-36000)	2650 (750-2830)	12.87	11.64	99
15+15+15	Duct	Duct	Duct			10400	10400	10400			31200 (11400-36000)	2650 (750-2830)	12.87	11.64	99
15+15+18	Non Duct	Non Duct	Non Duct			10200	10200	12200			32600 (11400-36000)	2650 (750-2830)	12.87	11.64	99
15+15+18	Non Duct	Non Duct	Duct			10400	10400	11800			32600 (11400-36000)	2650 (750-2830)	12.87	11.64	99
15+15+18	Non Duct	Duct	Non Duct			10400	9800	12400			32600 (11400-36000)	2650 (750-2830)	12.87	11.64	99
15+15+18	Non Duct	Duct	Duct			10800	9600	11600			32000 (11400-36000)	2650 (750-2830)	12.87	11.64	99
15+15+18	Duct	Duct	Non Duct			9600	9600	12800			32000 (11400-36000)	2650 (750-2830)	12.87	11.64	99
15+15+18	Duct	Duct	Duct			9600	9600	11600			30800 (11400-36000)	2650 (750-2830)	12.87	11.64	99
15+18+18	Non Duct	Non Duct	Non Duct			9600	11500	11500			32600 (11400-36000)	2650 (750-2830)	12.87	11.64	99
15+18+18	Non Duct	Non Duct	Duct			9800	11700	11100			32600 (11400-36000)	2650 (750-2830)	12.87	11.64	99
15+18+18	Non Duct	Duct	Duct			10300	10900	10900			32100 (11400-36000)	2650 (750-2830)	12.87	11.64	99
15+18+18	Duct	Non Duct	Non Duct			9100	11500	11500			32100 (11400-36000)	2650 (750-2830)	12.87	11.64	99

MXZ-5B42NA HEATING

Indoor units combination	Indoor type					Heating Capacity (BTU/h)						Outdoor unit power consumption (W)	Current (A)	Current (A)	Power factor (%)
	Unit A	Unit B	Unit C	Unit D	Unit E	Unit A	Unit B	Unit C	Unit D	Unit E	Total		208V	230V	
15+18+18	Duct	Non Duct	Duct			9100	12100	10900			32100 (11400-36000)	2650 (750-2830)	12.87	11.64	99
15+18+18	Duct	Duct	Duct			9200	11100	11100			31400 (11400-36000)	2650 (750-2830)	12.87	11.64	99
06+06+06+06	Non Duct	Non Duct	Non Duct	Non Duct		7800	7800	7800	7800		31200 (11400-43000)	2390 (750-3890)	11.61	10.50	99
06+06+06+09	Non Duct	Non Duct	Non Duct	Non Duct		7700	7700	7700	11500		34600 (11400-43000)	2690 (750-3890)	13.06	11.81	99
06+06+06+09	Non Duct	Non Duct	Non Duct	Duct		7800	7800	7800	11100		34500 (11400-42600)	3050 (750-3910)	14.81	13.39	99
06+06+06+12	Non Duct	Non Duct	Non Duct	Non Duct		7200	7200	7200	14400		36000 (11400-43000)	3030 (750-3890)	14.71	13.31	99
06+06+06+12	Non Duct	Non Duct	Non Duct	Duct		7400	7400	7400	14000		36200 (11400-42600)	3050 (750-3910)	14.81	13.39	99
06+06+06+15	Non Duct	Non Duct	Non Duct	Non Duct		6600	6600	6600	16400		36200 (11400-43000)	3030 (750-3890)	14.71	13.31	99
06+06+06+15	Non Duct	Non Duct	Non Duct	Duct		6700	6700	6700	16000		36100 (11400-42600)	3050 (750-3910)	14.81	13.39	99
06+06+06+18	Non Duct	Non Duct	Non Duct	Non Duct		6000	6000	6000	18000		36000 (11400-43000)	3030 (750-3890)	14.71	13.31	99
06+06+06+18	Non Duct	Non Duct	Non Duct	Duct		6200	6200	6200	17600		36200 (11400-42600)	3050 (750-3910)	14.81	13.39	99
06+06+06+24	Non Duct	Non Duct	Non Duct	Non Duct		5200	5200	5200	20600		36200 (11400-43000)	3030 (750-3890)	14.71	13.31	99
06+06+09+09	Non Duct	Non Duct	Non Duct	Non Duct		7200	7200	10800	10800		36000 (11400-43000)	3030 (750-3890)	14.71	13.31	99
06+06+09+09	Non Duct	Non Duct	Non Duct	Duct		7300	7300	10900	10300		35800 (11400-42600)	3050 (750-3910)	14.81	13.39	99
06+06+09+09	Non Duct	Non Duct	Duct	Duct		7500	7500	10200	10200		35400 (11400-42200)	3070 (750-3930)	14.91	13.48	99
06+06+09+12	Non Duct	Non Duct	Non Duct	Non Duct		6600	6600	9900	13100		36200 (11400-43000)	3030 (750-3890)	14.71	13.31	99
06+06+09+12	Non Duct	Non Duct	Non Duct	Duct		6700	6700	9900	12600		35900 (11400-42600)	3050 (750-3910)	14.81	13.39	99
06+06+09+12	Non Duct	Non Duct	Duct	Non Duct		6700	6700	9400	13100		35900 (11400-42600)	3050 (750-3910)	14.81	13.39	99
06+06+09+12	Non Duct	Non Duct	Duct	Duct		6800	6800	9200	12400		35200 (11400-42200)	3070 (750-3930)	14.91	13.48	99
06+06+09+15	Non Duct	Non Duct	Non Duct	Non Duct		6000	6000	9000	15000		36000 (11400-43000)	3030 (750-3890)	14.71	13.31	99
06+06+09+15	Non Duct	Non Duct	Non Duct	Duct		6100	6100	9100	14500		35800 (11400-42600)	3050 (750-3910)	14.81	13.39	99
06+06+09+15	Non Duct	Non Duct	Duct	Non Duct		6100	6100	8500	15000		35700 (11400-42600)	3050 (750-3910)	14.81	13.39	99
06+06+09+15	Non Duct	Non Duct	Duct	Duct		6300	6300	8400	14300		35300 (11400-42200)	3070 (750-3930)	14.91	13.48	99
06+06+09+18	Non Duct	Non Duct	Non Duct	Non Duct		5600	5600	8400	16700		36300 (11400-43000)	3030 (750-3890)	14.71	13.31	99
06+06+09+18	Non Duct	Non Duct	Non Duct	Duct		5700	5700	8400	16100		35900 (11400-42600)	3050 (750-3910)	14.81	13.39	99
06+06+09+18	Non Duct	Non Duct	Duct	Non Duct		5700	5700	7900	16600		35900 (11400-42600)	3050 (750-3910)	14.81	13.39	99
06+06+09+18	Non Duct	Non Duct	Duct	Duct		5900	5900	7800	15900		35500 (11400-42200)	3070 (750-3930)	14.91	13.48	99
06+06+09+24	Non Duct	Non Duct	Non Duct	Non Duct		4800	4800	7200	19200		36000 (11400-43000)	3030 (750-3890)	14.71	13.31	99
06+06+09+24	Non Duct	Non Duct	Duct	Non Duct		4900	4900	6800	19200		35800 (11400-42600)	3050 (750-3910)	14.81	13.39	99
06+06+12+12	Non Duct	Non Duct	Non Duct	Non Duct		6000	6000	12000	12000		36000 (11400-43000)	3030 (750-3890)	14.71	13.31	99
06+06+12+12	Non Duct	Non Duct	Non Duct	Duct		6100	6100	12100	11500		35800 (11400-42600)	3050 (750-3910)	14.81	13.39	99
06+06+12+12	Non Duct	Non Duct	Duct	Duct		6300	6300	11400	11400		35400 (11400-42200)	3070 (750-3930)	14.91	13.48	99
06+06+12+15	Non Duct	Non Duct	Non Duct	Non Duct		5600	5600	11100	13900		36200 (11400-43000)	3030 (750-3890)	14.71	13.31	99
06+06+12+15	Non Duct	Non Duct	Non Duct	Duct		5700	5700	11100	13300		35800 (11400-42600)	3050 (750-3910)	14.81	13.39	99
06+06+12+15	Non Duct	Non Duct	Duct	Non Duct		5700	5700	10600	13900		35900 (11400-42600)	3050 (750-3910)	14.81	13.39	99
06+06+12+15	Non Duct	Non Duct	Duct	Duct		5900	5900	10500	13200		35500 (11400-42200)	3070 (750-3930)	14.91	13.48	99
06+06+12+18	Non Duct	Non Duct	Non Duct	Non Duct		5200	5200	10300	15500		36200 (11400-43000)	3030 (750-3890)	14.71	13.31	99
06+06+12+18	Non Duct	Non Duct	Non Duct	Duct		5300	5300	10400	14900		35900 (11400-42600)	3050 (750-3910)	14.81	13.39	99
06+06+12+18	Non Duct	Non Duct	Duct	Non Duct		5300	5300	9800	15400		35800 (11400-42600)	3050 (750-3910)	14.81	13.39	99
06+06+12+18	Non Duct	Non Duct	Duct	Duct		5500	5500	9700	14700		35400 (11400-42200)	3070 (750-3930)	14.91	13.48	99
06+06+12+24	Non Duct	Non Duct	Non Duct	Non Duct		4500	4500	9000	18000		36000 (11400-43000)	3030 (750-3890)	14.71	13.31	99
06+06+12+24	Non Duct	Non Duct	Duct	Non Duct		4600	4600	8500	18000		35700 (11400-42600)	3050 (750-3910)	14.81	13.39	99
06+06+15+15	Non Duct	Non Duct	Non Duct	Non Duct		5200	5200	12900	12900		36200 (11400-43000)	3030 (750-3890)	14.71	13.31	99
06+06+15+15	Non Duct	Non Duct	Non Duct	Duct		5300	5300	12900	12400		35900 (11400-42600)	3050 (750-3910)	14.81	13.39	99
06+06+15+15	Non Duct	Non Duct	Duct	Duct		5500	5500	12200	12200		35400 (11400-42200)	3070 (750-3930)	14.91	13.48	99
06+06+15+18	Non Duct	Non Duct	Non Duct	Non Duct		4800	4800	12000	14400		36000 (11400-43000)	3030 (750-3890)	14.71	13.31	99
06+06+15+18	Non Duct	Non Duct	Non Duct	Duct		4900	4900	12100	13900		35800 (11400-42600)	3050 (750-3910)	14.81	13.39	99
06+06+15+18	Non Duct	Non Duct	Duct	Non Duct		4900	4900	11500	14400		35700 (11400-42600)	3050 (750-3910)	14.81	13.39	99
06+06+15+18	Non Duct	Non Duct	Duct	Duct		5100	5100	11400	13700		35300 (11400-42200)	3070 (750-3930)	14.91	13.48	99
06+06+15+24	Non Duct	Non Duct	Non Duct	Non Duct		4300	4300	10600	17000		36200 (11400-43000)	3030 (750-3890)	14.71	13.31	99
06+06+15+24	Non Duct	Non Duct	Duct	Non Duct		4400	4400	10100	16900		35800 (11400-42600)	3050 (750-3910)	14.81	13.39	99

MXZ-5B42NA HEATING

Indoor units combination	Indoor type					Heating Capacity (BTU/h)						Outdoor unit power consumption (W)	Current (A)	Current (A)	Power factor (%)
	Unit A	Unit B	Unit C	Unit D	Unit E	Unit A	Unit B	Unit C	Unit D	Unit E	Total		208V	230V	
06+06+18+18	Non Duct	Non Duct	Non Duct	Non Duct		4500	4500	13500	13500		36000 (11400-43000)	3030 (750-3890)	14.71	13.31	99
06+06+18+18	Non Duct	Non Duct	Non Duct	Duct		4600	4600	13500	13000		35700 (11400-42600)	3050 (750-3910)	14.81	13.39	99
06+06+18+18	Non Duct	Non Duct	Duct	Duct		4800	4800	12800	12800		35200 (11400-42200)	3070 (750-3930)	14.91	13.48	99
06+09+09+09	Non Duct	Non Duct	Non Duct	Non Duct		6600	9900	9900	9900		36300 (11400-43000)	3030 (750-3890)	14.71	13.31	99
06+09+09+09	Non Duct	Non Duct	Non Duct	Duct		6700	9900	9900	9400		35900 (11400-42600)	3050 (750-3910)	14.81	13.39	99
06+09+09+09	Non Duct	Non Duct	Duct	Duct		6800	10000	9200	9200		35200 (11400-42200)	3070 (750-3930)	14.91	13.48	99
06+09+09+09	Non Duct	Duct	Duct	Duct		7600	9100	9100	9100		34900 (11400-41800)	3090 (750-3950)	15.01	13.57	99
06+09+09+12	Non Duct	Non Duct	Non Duct	Non Duct		6000	9000	9000	12000		36000 (11400-43000)	3030 (750-3890)	14.71	13.31	99
06+09+09+12	Non Duct	Non Duct	Non Duct	Duct		6200	9200	9200	11600		36200 (11400-42600)	3050 (750-3910)	14.81	13.39	99
06+09+09+12	Non Duct	Non Duct	Duct	Non Duct		6100	9100	8500	12100		35800 (11400-42600)	3050 (750-3910)	14.81	13.39	99
06+09+09+12	Non Duct	Non Duct	Duct	Duct		6400	9300	8500	11500		35700 (11400-42200)	3070 (750-3930)	14.91	13.48	99
06+09+09+12	Non Duct	Duct	Duct	Non Duct		6300	8400	8400	12200		35300 (11400-42200)	3070 (750-3930)	14.91	13.48	99
06+09+09+12	Non Duct	Duct	Duct	Duct		7100	8400	8400	11400		35300 (11400-41800)	3090 (750-3950)	15.01	13.57	99
06+09+09+15	Non Duct	Non Duct	Non Duct	Non Duct		5600	8400	8400	13900		36300 (11400-43000)	3030 (750-3890)	14.71	13.31	99
06+09+09+15	Non Duct	Non Duct	Non Duct	Duct		5700	8500	8500	13500		36200 (11400-42600)	3050 (750-3910)	14.81	13.39	99
06+09+09+15	Non Duct	Non Duct	Duct	Non Duct		5700	8400	7900	13900		35900 (11400-42600)	3050 (750-3910)	14.81	13.39	99
06+09+09+15	Non Duct	Non Duct	Duct	Duct		5900	8700	7900	13300		35800 (11400-42200)	3070 (750-3930)	14.91	13.48	99
06+09+09+15	Non Duct	Duct	Duct	Non Duct		5900	7800	7800	14000		35500 (11400-42200)	3070 (750-3930)	14.91	13.48	99
06+09+09+15	Non Duct	Duct	Duct	Duct		6800	8000	8000	13500		36300 (11400-41800)	3090 (750-3950)	15.01	13.57	99
06+09+09+18	Non Duct	Non Duct	Non Duct	Non Duct		5200	7800	7800	15500		36300 (11400-43000)	3030 (750-3890)	14.71	13.31	99
06+09+09+18	Non Duct	Non Duct	Non Duct	Duct		5300	7800	7800	14900		35800 (11400-42600)	3050 (750-3910)	14.81	13.39	99
06+09+09+18	Non Duct	Non Duct	Duct	Non Duct		5300	7800	7300	15400		35800 (11400-42600)	3050 (750-3910)	14.81	13.39	99
06+09+09+18	Non Duct	Non Duct	Duct	Duct		5500	8000	7200	14700		35400 (11400-42200)	3070 (750-3930)	14.91	13.48	99
06+09+09+18	Non Duct	Duct	Duct	Non Duct		5500	7200	7200	15500		35400 (11400-42200)	3070 (750-3930)	14.91	13.48	99
06+09+09+18	Non Duct	Duct	Duct	Duct		6200	7100	7100	14600		35000 (11400-41800)	3090 (750-3950)	15.01	13.57	99
06+09+09+24	Non Duct	Non Duct	Non Duct	Non Duct		4500	6800	6800	18000		36100 (11400-43000)	3030 (750-3890)	14.71	13.31	99
06+09+09+24	Non Duct	Non Duct	Duct	Non Duct		4600	6900	6300	18000		35800 (11400-42600)	3050 (750-3910)	14.81	13.39	99
06+09+09+24	Non Duct	Duct	Duct	Non Duct		4800	6200	6200	18000		35200 (11400-42200)	3070 (750-3930)	14.91	13.48	99
06+09+12+12	Non Duct	Non Duct	Non Duct	Non Duct		5600	8400	11100	11100		36200 (11400-43000)	3030 (750-3890)	14.71	13.31	99
06+09+12+12	Non Duct	Non Duct	Non Duct	Duct		5700	8500	11300	10700		36200 (11400-42600)	3050 (750-3910)	14.81	13.39	99
06+09+12+12	Non Duct	Non Duct	Duct	Duct		6000	8800	10700	10700		36200 (11400-42200)	3070 (750-3930)	14.91	13.48	99
06+09+12+12	Non Duct	Duct	Non Duct	Non Duct		5700	7900	11100	11100		35800 (11400-42600)	3050 (750-3910)	14.81	13.39	99
06+09+12+12	Non Duct	Duct	Non Duct	Duct		5900	7900	11400	10600		35800 (11400-42200)	3070 (750-3930)	14.91	13.48	99
06+09+12+12	Non Duct	Duct	Duct	Duct		6700	7900	10600	10600		35800 (11400-41800)	3090 (750-3950)	15.01	13.57	99
06+09+12+15	Non Duct	Non Duct	Non Duct	Non Duct		5200	7800	10300	12900		36200 (11400-43000)	3030 (750-3890)	14.71	13.31	99
06+09+12+15	Non Duct	Non Duct	Non Duct	Duct		5300	7900	10500	12500		36200 (11400-42600)	3050 (750-3910)	14.81	13.39	99
06+09+12+15	Non Duct	Non Duct	Duct	Non Duct		5300	7900	9900	13000		36100 (11400-42600)	3050 (750-3910)	14.81	13.39	99
06+09+12+15	Non Duct	Non Duct	Duct	Duct		5600	8200	9900	12500		36200 (11400-42200)	3070 (750-3930)	14.91	13.48	99
06+09+12+15	Non Duct	Duct	Non Duct	Non Duct		5300	7300	10400	12900		35900 (11400-42600)	3050 (750-3910)	14.81	13.39	99
06+09+12+15	Non Duct	Duct	Non Duct	Duct		5500	7300	10600	12400		35800 (11400-42200)	3070 (750-3930)	14.91	13.48	99
06+09+12+15	Non Duct	Duct	Duct	Non Duct		5500	7300	9800	13200		35800 (11400-42200)	3070 (750-3930)	14.91	13.48	99
06+09+12+15	Non Duct	Duct	Duct	Duct		6300	7300	9800	12400		35800 (11400-41800)	3090 (750-3950)	15.01	13.57	99
06+09+12+18	Non Duct	Non Duct	Non Duct	Non Duct		4800	7200	9600	14400		36000 (11400-43000)	3030 (750-3890)	14.71	13.31	99
06+09+12+18	Non Duct	Non Duct	Non Duct	Duct		4900	7300	9700	13900		35800 (11400-42600)	3050 (750-3910)	14.81	13.39	99
06+09+12+18	Non Duct	Non Duct	Duct	Non Duct		4900	7300	9100	14400		35700 (11400-42600)	3050 (750-3910)	14.81	13.39	99
06+09+12+18	Non Duct	Non Duct	Duct	Duct		5100	7500	9000	13700		35300 (11400-42200)	3070 (750-3930)	14.91	13.48	99
06+09+12+18	Non Duct	Duct	Non Duct	Non Duct		4900	6800	9700	14400		35800 (11400-42600)	3050 (750-3910)	14.81	13.39	99
06+09+12+18	Non Duct	Duct	Non Duct	Duct		5100	6700	9800	13700		35300 (11400-42200)	3070 (750-3930)	14.91	13.48	99
06+09+12+18	Non Duct	Duct	Duct	Non Duct		5100	6700	9000	14500		35300 (11400-42200)	3070 (750-3930)	14.91	13.48	99
06+09+12+18	Non Duct	Duct	Duct	Duct		5900	6600	8900	13600		35000 (11400-41800)	3090 (750-3950)	15.01	13.57	99
06+09+12+24	Non Duct	Non Duct	Non Duct	Non Duct		4300	6400	8500	17000		36200 (11400-43000)	3030 (750-3890)	14.71	13.31	99

MXZ-5B42NA HEATING

Indoor units combination	Indoor type					Heating Capacity (BTU/h)						Outdoor unit power consumption (W)	Current (A)	Current (A)	Power factor (%)
	Unit A	Unit B	Unit C	Unit D	Unit E	Unit A	Unit B	Unit C	Unit D	Unit E	Total		208V	230V	
06+09+12+24	Non Duct	Non Duct	Duct	Non Duct		4400	6500	8000	16900		35800 (11400-42600)	3050 (750-3910)	14.81	13.39	99
06+09+12+24	Non Duct	Duct	Non Duct	Non Duct		4400	5900	8600	16900		35800 (11400-42600)	3050 (750-3910)	14.81	13.39	99
06+09+12+24	Non Duct	Duct	Duct	Non Duct		4600	5900	7900	17000		35400 (11400-42200)	3070 (750-3930)	14.91	13.48	99
06+09+15+15	Non Duct	Non Duct	Non Duct	Non Duct		4800	7200	12000	12000		36000 (11400-43000)	3030 (750-3890)	14.71	13.31	99
06+09+15+15	Non Duct	Non Duct	Non Duct	Duct		4900	7300	12100	11500		35800 (11400-42600)	3050 (750-3910)	14.81	13.39	99
06+09+15+15	Non Duct	Non Duct	Duct	Duct		5100	7500	11400	11400		35400 (11400-42200)	3070 (750-3930)	14.91	13.48	99
06+09+15+15	Non Duct	Duct	Non Duct	Non Duct		4900	6800	12100	12100		35900 (11400-42600)	3050 (750-3910)	14.81	13.39	99
06+09+15+15	Non Duct	Duct	Non Duct	Duct		5100	6700	12200	11400		35400 (11400-42200)	3070 (750-3930)	14.91	13.48	99
06+09+15+15	Non Duct	Duct	Duct	Duct		5900	6600	11200	11200		34900 (11400-41800)	3090 (750-3950)	15.01	13.57	99
06+09+15+18	Non Duct	Non Duct	Non Duct	Non Duct		4500	6800	11300	13500		36100 (11400-43000)	3030 (750-3890)	14.71	13.31	99
06+09+15+18	Non Duct	Non Duct	Non Duct	Duct		4600	6900	11300	13000		35800 (11400-42600)	3050 (750-3910)	14.81	13.39	99
06+09+15+18	Non Duct	Non Duct	Duct	Non Duct		4600	6900	10800	13500		35800 (11400-42600)	3050 (750-3910)	14.81	13.39	99
06+09+15+18	Non Duct	Non Duct	Duct	Duct		4800	7000	10600	12800		35200 (11400-42200)	3070 (750-3930)	14.91	13.48	99
06+09+15+18	Non Duct	Duct	Non Duct	Non Duct		4600	6300	11300	13500		35700 (11400-42600)	3050 (750-3910)	14.81	13.39	99
06+09+15+18	Non Duct	Duct	Non Duct	Duct		4800	6200	11400	12800		35200 (11400-42200)	3070 (750-3930)	14.91	13.48	99
06+09+15+18	Non Duct	Duct	Duct	Non Duct		4800	6200	10600	13600		35200 (11400-42200)	3070 (750-3930)	14.91	13.48	99
06+09+15+18	Non Duct	Duct	Duct	Duct		5600	6200	10500	12700		35000 (11400-41800)	3090 (750-3950)	15.01	13.57	99
06+09+18+18	Non Duct	Non Duct	Non Duct	Non Duct		4300	6400	12800	12800		36300 (11400-43000)	3030 (750-3890)	14.71	13.31	99
06+09+18+18	Non Duct	Non Duct	Non Duct	Duct		4400	6500	12700	12200		35800 (11400-42600)	3050 (750-3910)	14.81	13.39	99
06+09+18+18	Non Duct	Non Duct	Duct	Duct		4600	6700	12100	12100		35500 (11400-42200)	3070 (750-3930)	14.91	13.48	99
06+09+18+18	Non Duct	Duct	Non Duct	Non Duct		4400	5900	12700	12700		35700 (11400-42600)	3050 (750-3910)	14.81	13.39	99
06+09+18+18	Non Duct	Duct	Non Duct	Duct		4600	5900	12900	12100		35500 (11400-42200)	3070 (750-3930)	14.91	13.48	99
06+09+18+18	Non Duct	Duct	Duct	Duct		5300	5800	11900	11900		34900 (11400-41800)	3090 (750-3950)	15.01	13.57	99
06+12+12+12	Non Duct	Non Duct	Non Duct	Non Duct		5200	10300	10300	10300		36100 (11400-43000)	3030 (750-3890)	14.71	13.31	99
06+12+12+12	Non Duct	Non Duct	Non Duct	Duct		5300	10400	10400	9800		35900 (11400-42600)	3050 (750-3910)	14.81	13.39	99
06+12+12+12	Non Duct	Non Duct	Duct	Duct		5500	10500	9700	9700		35400 (11400-42200)	3070 (750-3930)	14.91	13.48	99
06+12+12+12	Non Duct	Duct	Duct	Duct		6200	9600	9600	9600		35000 (11400-41800)	3090 (750-3950)	15.01	13.57	99
06+12+12+15	Non Duct	Non Duct	Non Duct	Non Duct		4800	9600	9600	12000		36000 (11400-43000)	3030 (750-3890)	14.71	13.31	99
06+12+12+15	Non Duct	Non Duct	Non Duct	Duct		4900	9700	9700	11500		35800 (11400-42600)	3050 (750-3910)	14.81	13.39	99
06+12+12+15	Non Duct	Non Duct	Duct	Non Duct		4900	9700	9100	12100		35800 (11400-42600)	3050 (750-3910)	14.81	13.39	99
06+12+12+15	Non Duct	Non Duct	Duct	Duct		5100	9800	9000	11400		35300 (11400-42200)	3070 (750-3930)	14.91	13.48	99
06+12+12+15	Non Duct	Duct	Duct	Non Duct		5100	9000	9000	12200		35300 (11400-42200)	3070 (750-3930)	14.91	13.48	99
06+12+12+15	Non Duct	Duct	Duct	Duct		5900	8900	8900	11200		34900 (11400-41800)	3090 (750-3950)	15.01	13.57	99
06+12+12+18	Non Duct	Non Duct	Non Duct	Non Duct		4500	9000	9000	13500		36000 (11400-43000)	3030 (750-3890)	14.71	13.31	99
06+12+12+18	Non Duct	Non Duct	Non Duct	Duct		4600	9100	9100	13000		35800 (11400-42600)	3050 (750-3910)	14.81	13.39	99
06+12+12+18	Non Duct	Non Duct	Duct	Non Duct		4600	9100	8500	13500		35700 (11400-42600)	3050 (750-3910)	14.81	13.39	99
06+12+12+18	Non Duct	Non Duct	Duct	Duct		4800	9200	8400	12800		35200 (11400-42200)	3070 (750-3930)	14.91	13.48	99
06+12+12+18	Non Duct	Duct	Duct	Non Duct		4800	8400	8400	13600		35200 (11400-42200)	3070 (750-3930)	14.91	13.48	99
06+12+12+18	Non Duct	Duct	Duct	Duct		5600	8300	8300	12700		34900 (11400-41800)	3090 (750-3950)	15.01	13.57	99
06+12+15+15	Non Duct	Non Duct	Non Duct	Non Duct		4500	9000	11300	11300		36100 (11400-43000)	3030 (750-3890)	14.71	13.31	99
06+12+15+15	Non Duct	Non Duct	Non Duct	Duct		4600	9100	11300	10800		35800 (11400-42600)	3050 (750-3910)	14.81	13.39	99
06+12+15+15	Non Duct	Non Duct	Duct	Duct		4800	9200	10600	10600		35200 (11400-42200)	3070 (750-3930)	14.91	13.48	99
06+12+15+15	Non Duct	Duct	Non Duct	Non Duct		4600	8500	11300	11300		35700 (11400-42600)	3050 (750-3910)	14.81	13.39	99
06+12+15+15	Non Duct	Duct	Non Duct	Duct		4800	8400	11400	10600		35200 (11400-42200)	3070 (750-3930)	14.91	13.48	99
06+12+15+15	Non Duct	Duct	Duct	Duct		5600	8300	10500	10500		34900 (11400-41800)	3090 (750-3950)	15.01	13.57	99
06+12+15+18	Non Duct	Non Duct	Non Duct	Non Duct		4300	8500	10600	12800		36200 (11400-43000)	3030 (750-3890)	14.71	13.31	99
06+12+15+18	Non Duct	Non Duct	Non Duct	Duct		4400	8600	10700	12200		35900 (11400-42600)	3050 (750-3910)	14.81	13.39	99
06+12+15+18	Non Duct	Non Duct	Duct	Non Duct		4400	8600	10100	12700		35800 (11400-42600)	3050 (750-3910)	14.81	13.39	99
06+12+15+18	Non Duct	Non Duct	Duct	Duct		4600	8700	10000	12100		35400 (11400-42200)	3070 (750-3930)	14.91	13.48	99
06+12+15+18	Non Duct	Duct	Non Duct	Non Duct		4400	8000	10700	12700		35800 (11400-42600)	3050 (750-3910)	14.81	13.39	99
06+12+15+18	Non Duct	Duct	Non Duct	Duct		4600	7900	10800	12100		35400 (11400-42200)	3070 (750-3930)	14.91	13.48	99

MXZ-5B42NA HEATING

Indoor units combination	Indoor type					Heating Capacity (BTU/h)						Outdoor unit power consumption (W)	Current (A)	Current (A)	Power factor (%)
	Unit A	Unit B	Unit C	Unit D	Unit E	Unit A	Unit B	Unit C	Unit D	Unit E	Total		208V	230V	
06+12+15+18	Non Duct	Duct	Duct	Non Duct		4600	7900	10000	12900		35400 (11400-42200)	3070 (750-3930)	14.91	13.48	99
06+12+15+18	Non Duct	Duct	Duct	Duct		5300	7800	9900	11900		34900 (11400-41800)	3090 (750-3950)	15.01	13.57	99
06+15+15+15	Non Duct	Non Duct	Non Duct	Non Duct		4300	10600	10600	10600		36100 (11400-43000)	3030 (750-3890)	14.71	13.31	99
06+15+15+15	Non Duct	Non Duct	Non Duct	Duct		4400	10700	10700	10100		35900 (11400-42600)	3050 (750-3910)	14.81	13.39	99
06+15+15+15	Non Duct	Non Duct	Duct	Duct		4600	10800	10000	10000		35400 (11400-42200)	3070 (750-3930)	14.91	13.48	99
06+15+15+15	Non Duct	Duct	Duct	Duct		5300	9900	9900	9900		35000 (11400-41800)	3090 (750-3950)	15.01	13.57	99
09+09+09+09	Non Duct	Non Duct	Non Duct	Non Duct		9000	9000	9000	9000		36000 (11400-43000)	3030 (750-3890)	14.71	13.31	99
09+09+09+09	Non Duct	Non Duct	Non Duct	Duct		9100	9100	9100	8500		35800 (11400-42600)	3050 (750-3910)	14.81	13.39	99
09+09+09+09	Non Duct	Non Duct	Duct	Duct		9200	9200	8400	8400		35200 (11400-42200)	3070 (750-3930)	14.91	13.48	99
09+09+09+09	Non Duct	Duct	Duct	Duct		9900	8300	8300	8300		34800 (11400-41800)	3090 (750-3950)	15.01	13.57	99
09+09+09+09	Duct	Duct	Duct	Duct		8200	8200	8200	8200		32800 (11400-41400)	3110 (750-3970)	15.10	13.66	99
09+09+09+12	Non Duct	Non Duct	Non Duct	Non Duct		8400	8400	8400	11100		36300 (11400-43000)	3030 (750-3890)	14.71	13.31	99
09+09+09+12	Non Duct	Non Duct	Non Duct	Duct		8500	8500	8500	10700		36200 (11400-42600)	3050 (750-3910)	14.81	13.39	99
09+09+09+12	Non Duct	Non Duct	Duct	Non Duct		8400	8400	7900	11100		35800 (11400-42600)	3050 (750-3910)	14.81	13.39	99
09+09+09+12	Non Duct	Non Duct	Duct	Duct		8700	8700	7900	10600		35900 (11400-42200)	3070 (750-3930)	14.91	13.48	99
09+09+09+12	Non Duct	Duct	Duct	Non Duct		8600	7800	7800	11300		35500 (11400-42200)	3070 (750-3930)	14.91	13.48	99
09+09+09+12	Non Duct	Duct	Duct	Duct		9300	7700	7700	10400		35100 (11400-41800)	3090 (750-3950)	15.01	13.57	99
09+09+09+12	Duct	Duct	Duct	Non Duct		7700	7700	7700	12000		35100 (11400-41800)	3090 (750-3950)	15.01	13.57	99
09+09+09+12	Duct	Duct	Duct	Duct		8000	8000	8000	10700		34700 (11400-41400)	3110 (750-3970)	15.10	13.66	99
09+09+09+15	Non Duct	Non Duct	Non Duct	Non Duct		7800	7800	7800	12900		36300 (11400-43000)	3030 (750-3890)	14.71	13.31	99
09+09+09+15	Non Duct	Non Duct	Non Duct	Duct		7800	7800	7800	12400		35800 (11400-42600)	3050 (750-3910)	14.81	13.39	99
09+09+09+15	Non Duct	Non Duct	Duct	Non Duct		7800	7800	7300	12900		35800 (11400-42600)	3050 (750-3910)	14.81	13.39	99
09+09+09+15	Non Duct	Non Duct	Duct	Duct		8000	8000	7200	12200		35400 (11400-42200)	3070 (750-3930)	14.91	13.48	99
09+09+09+15	Non Duct	Duct	Duct	Non Duct		8000	7200	7200	13000		35400 (11400-42200)	3070 (750-3930)	14.91	13.48	99
09+09+09+15	Non Duct	Duct	Duct	Duct		8700	7100	7100	12100		35000 (11400-41800)	3090 (750-3950)	15.01	13.57	99
09+09+09+15	Duct	Duct	Duct	Non Duct		7100	7100	7100	13700		35000 (11400-41800)	3090 (750-3950)	15.01	13.57	99
09+09+09+15	Duct	Duct	Duct	Duct		7400	7400	7400	12500		34700 (11400-41400)	3110 (750-3970)	15.10	13.66	99
09+09+09+18	Non Duct	Non Duct	Non Duct	Non Duct		7200	7200	7200	14400		36000 (11400-43000)	3030 (750-3890)	14.71	13.31	99
09+09+09+18	Non Duct	Non Duct	Non Duct	Duct		7300	7300	7300	13900		35800 (11400-42600)	3050 (750-3910)	14.81	13.39	99
09+09+09+18	Non Duct	Non Duct	Duct	Non Duct		7300	7300	6800	14400		35800 (11400-42600)	3050 (750-3910)	14.81	13.39	99
09+09+09+18	Non Duct	Non Duct	Duct	Duct		7500	7500	6700	13700		35400 (11400-42200)	3070 (750-3930)	14.91	13.48	99
09+09+09+18	Non Duct	Duct	Duct	Non Duct		7500	6700	6700	14500		35400 (11400-42200)	3070 (750-3930)	14.91	13.48	99
09+09+09+18	Non Duct	Duct	Duct	Duct		8200	6600	6600	13600		35000 (11400-41800)	3090 (750-3950)	15.01	13.57	99
09+09+09+18	Duct	Duct	Duct	Non Duct		6600	6600	6600	15200		35000 (11400-41800)	3090 (750-3950)	15.01	13.57	99
09+09+09+18	Duct	Duct	Duct	Duct		6500	6500	6500	13400		32900 (11400-41400)	3110 (750-3970)	15.10	13.66	99
09+09+09+24	Non Duct	Non Duct	Non Duct	Non Duct		6400	6400	6400	17000		36200 (11400-43000)	3030 (750-3890)	14.71	13.31	99
09+09+09+24	Non Duct	Non Duct	Duct	Non Duct		6500	6500	5900	16900		35800 (11400-42600)	3050 (750-3910)	14.81	13.39	99
09+09+09+24	Non Duct	Duct	Duct	Non Duct		6700	5900	5900	17000		35500 (11400-42200)	3070 (750-3930)	14.91	13.48	99
09+09+09+24	Duct	Duct	Duct	Non Duct		5800	5800	5800	17600		35000 (11400-41800)	3090 (750-3950)	15.01	13.57	99
09+09+12+12	Non Duct	Non Duct	Non Duct	Non Duct		7800	7800	10300	10300		36200 (11400-43000)	3030 (750-3890)	14.71	13.31	99
09+09+12+12	Non Duct	Non Duct	Non Duct	Duct		7800	7800	10400	9800		35800 (11400-42600)	3050 (750-3910)	14.81	13.39	99
09+09+12+12	Non Duct	Non Duct	Duct	Duct		8000	8000	9700	9700		35400 (11400-42200)	3070 (750-3930)	14.91	13.48	99
09+09+12+12	Non Duct	Duct	Non Duct	Non Duct		7800	7300	10400	10400		35900 (11400-42600)	3050 (750-3910)	14.81	13.39	99
09+09+12+12	Non Duct	Duct	Non Duct	Duct		8000	7200	10500	9700		35400 (11400-42200)	3070 (750-3930)	14.91	13.48	99
09+09+12+12	Non Duct	Duct	Duct	Duct		8700	7100	9600	9600		35000 (11400-41800)	3090 (750-3950)	15.01	13.57	99
09+09+12+12	Duct	Duct	Non Duct	Non Duct		7200	7200	10500	10500		35400 (11400-42200)	3070 (750-3930)	14.91	13.48	99
09+09+12+12	Duct	Duct	Non Duct	Duct		7100	7100	11200	9600		35000 (11400-41800)	3090 (750-3950)	15.01	13.57	99
09+09+12+12	Duct	Duct	Duct	Duct		7000	7000	9500	9500		33000 (11400-41400)	3110 (750-3970)	15.10	13.66	99
09+09+12+15	Non Duct	Non Duct	Non Duct	Non Duct		7200	7200	9600	12000		36000 (11400-43000)	3030 (750-3890)	14.71	13.31	99
09+09+12+15	Non Duct	Non Duct	Non Duct	Duct		7300	7300	9700	11500		35800 (11400-42600)	3050 (750-3910)	14.81	13.39	99
09+09+12+15	Non Duct	Non Duct	Duct	Non Duct		7300	7300	9100	12100		35800 (11400-42600)	3050 (750-3910)	14.81	13.39	99

MXZ-5B42NA HEATING

Indoor units combination	Indoor type					Heating Capacity (BTU/h)						Outdoor unit power consumption (W)	Current (A)	Current (A)	Power factor (%)
	Unit A	Unit B	Unit C	Unit D	Unit E	Unit A	Unit B	Unit C	Unit D	Unit E	Total		208V	230V	
09+09+12+15	Non Duct	Non Duct	Duct	Duct		7500	7500	9000	11400		35400 (11400-42200)	3070 (750-3930)	14.91	13.48	99
09+09+12+15	Non Duct	Duct	Non Duct	Non Duct		7300	6800	9700	12100		35900 (11400-42600)	3050 (750-3910)	14.81	13.39	99
09+09+12+15	Non Duct	Duct	Non Duct	Duct		7500	6700	9800	11400		35400 (11400-42200)	3070 (750-3930)	14.91	13.48	99
09+09+12+15	Non Duct	Duct	Duct	Non Duct		7500	6700	9000	12200		35400 (11400-42200)	3070 (750-3930)	14.91	13.48	99
09+09+12+15	Non Duct	Duct	Duct	Duct		8200	6600	8900	11200		34900 (11400-41800)	3090 (750-3950)	15.01	13.57	99
09+09+12+15	Duct	Duct	Non Duct	Non Duct		6700	6700	9800	12200		35400 (11400-42200)	3070 (750-3930)	14.91	13.48	99
09+09+12+15	Duct	Duct	Non Duct	Duct		6600	6600	10500	11200		34900 (11400-41800)	3090 (750-3950)	15.01	13.57	99
09+09+12+15	Duct	Duct	Duct	Non Duct		6600	6600	8900	12800		34900 (11400-41800)	3090 (750-3950)	15.01	13.57	99
09+09+12+15	Duct	Duct	Duct	Duct		6500	6500	8800	11100		32900 (11400-41400)	3110 (750-3970)	15.10	13.66	99
09+09+12+18	Non Duct	Non Duct	Non Duct	Non Duct		6800	6800	9000	13500		36100 (11400-43000)	3030 (750-3890)	14.71	13.31	99
09+09+12+18	Non Duct	Non Duct	Non Duct	Duct		6900	6900	9100	13000		35900 (11400-42600)	3050 (750-3910)	14.81	13.39	99
09+09+12+18	Non Duct	Non Duct	Duct	Non Duct		6900	6900	8500	13500		35800 (11400-42600)	3050 (750-3910)	14.81	13.39	99
09+09+12+18	Non Duct	Non Duct	Duct	Duct		7000	7000	8400	12800		35200 (11400-42200)	3070 (750-3930)	14.91	13.48	99
09+09+12+18	Non Duct	Duct	Non Duct	Non Duct		6900	6300	9100	13500		35800 (11400-42600)	3050 (750-3910)	14.81	13.39	99
09+09+12+18	Non Duct	Duct	Non Duct	Duct		7000	6200	9200	12800		35200 (11400-42200)	3070 (750-3930)	14.91	13.48	99
09+09+12+18	Non Duct	Duct	Duct	Non Duct		7000	6200	8400	13600		35200 (11400-42200)	3070 (750-3930)	14.91	13.48	99
09+09+12+18	Non Duct	Duct	Duct	Duct		7800	6200	8300	12700		35000 (11400-41800)	3090 (750-3950)	15.01	13.57	99
09+09+12+18	Duct	Duct	Non Duct	Non Duct		6200	6200	9200	13600		35200 (11400-42200)	3070 (750-3930)	14.91	13.48	99
09+09+12+18	Duct	Duct	Non Duct	Duct		6200	6200	9900	12700		35000 (11400-41800)	3090 (750-3950)	15.01	13.57	99
09+09+12+18	Duct	Duct	Duct	Non Duct		6200	6200	8300	14300		35000 (11400-41800)	3090 (750-3950)	15.01	13.57	99
09+09+12+18	Duct	Duct	Duct	Duct		6100	6100	8200	12500		32900 (11400-41400)	3110 (750-3970)	15.10	13.66	99
09+09+15+15	Non Duct	Non Duct	Non Duct	Non Duct		6800	6800	11300	11300		36200 (11400-43000)	3030 (750-3890)	14.71	13.31	99
09+09+15+15	Non Duct	Non Duct	Non Duct	Duct		6900	6900	11300	10800		35900 (11400-42600)	3050 (750-3910)	14.81	13.39	99
09+09+15+15	Non Duct	Non Duct	Duct	Duct		7000	7000	10600	10600		35200 (11400-42200)	3070 (750-3930)	14.91	13.48	99
09+09+15+15	Non Duct	Duct	Non Duct	Non Duct		6900	6300	11300	11300		35800 (11400-42600)	3050 (750-3910)	14.81	13.39	99
09+09+15+15	Non Duct	Duct	Non Duct	Duct		7000	6200	11400	10600		35200 (11400-42200)	3070 (750-3930)	14.91	13.48	99
09+09+15+15	Non Duct	Duct	Duct	Duct		7800	6200	10500	10500		35000 (11400-41800)	3090 (750-3950)	15.01	13.57	99
09+09+15+15	Duct	Duct	Non Duct	Non Duct		6200	6200	11400	11400		35200 (11400-42200)	3070 (750-3930)	14.91	13.48	99
09+09+15+15	Duct	Duct	Non Duct	Duct		6200	6200	12100	10500		35000 (11400-41800)	3090 (750-3950)	15.01	13.57	99
09+09+15+15	Duct	Duct	Duct	Duct		6100	6100	10400	10400		33000 (11400-41400)	3110 (750-3970)	15.10	13.66	99
09+09+15+18	Non Duct	Non Duct	Non Duct	Non Duct		6400	6400	10600	12800		36200 (11400-43000)	3030 (750-3890)	14.71	13.31	99
09+09+15+18	Non Duct	Non Duct	Non Duct	Duct		6500	6500	10700	12200		35900 (11400-42600)	3050 (750-3910)	14.81	13.39	99
09+09+15+18	Non Duct	Non Duct	Duct	Non Duct		6500	6500	10100	12700		35800 (11400-42600)	3050 (750-3910)	14.81	13.39	99
09+09+15+18	Non Duct	Non Duct	Duct	Duct		6700	6700	10000	12100		35500 (11400-42200)	3070 (750-3930)	14.91	13.48	99
09+09+15+18	Non Duct	Duct	Non Duct	Non Duct		6500	5900	10700	12700		35800 (11400-42600)	3050 (750-3910)	14.81	13.39	99
09+09+15+18	Non Duct	Duct	Non Duct	Duct		6700	5900	10800	12100		35500 (11400-42200)	3070 (750-3930)	14.91	13.48	99
09+09+15+18	Non Duct	Duct	Duct	Non Duct		6700	5900	10000	12900		35500 (11400-42200)	3070 (750-3930)	14.91	13.48	99
09+09+15+18	Non Duct	Duct	Duct	Duct		7400	5800	9900	11900		35000 (11400-41800)	3090 (750-3950)	15.01	13.57	99
09+09+15+18	Duct	Duct	Non Duct	Non Duct		5900	5900	10800	12900		35500 (11400-42200)	3070 (750-3930)	14.91	13.48	99
09+09+15+18	Duct	Duct	Non Duct	Duct		5800	5800	11500	11900		35000 (11400-41800)	3090 (750-3950)	15.01	13.57	99
09+09+15+18	Duct	Duct	Duct	Non Duct		5800	5800	9900	13500		35000 (11400-41800)	3090 (750-3950)	15.01	13.57	99
09+09+15+18	Duct	Duct	Duct	Duct		5700	5700	9800	11800		33000 (11400-41400)	3110 (750-3970)	15.10	13.66	99
09+12+12+12	Non Duct	Non Duct	Non Duct	Non Duct		7200	9600	9600	9600		36000 (11400-43000)	3030 (750-3890)	14.71	13.31	99
09+12+12+12	Non Duct	Non Duct	Non Duct	Duct		7300	9700	9700	9100		35800 (11400-42600)	3050 (750-3910)	14.81	13.39	99
09+12+12+12	Non Duct	Non Duct	Duct	Duct		7500	9800	9000	9000		35300 (11400-42200)	3070 (750-3930)	14.91	13.48	99
09+12+12+12	Non Duct	Duct	Duct	Duct		8200	8900	8900	8900		34900 (11400-41800)	3090 (750-3950)	15.01	13.57	99
09+12+12+12	Duct	Non Duct	Non Duct	Non Duct		6800	9700	9700	9700		35900 (11400-42600)	3050 (750-3910)	14.81	13.39	99
09+12+12+12	Duct	Non Duct	Non Duct	Duct		6700	9800	9800	9000		35300 (11400-42200)	3070 (750-3930)	14.91	13.48	99
09+12+12+12	Duct	Non Duct	Duct	Duct		6600	10500	8900	8900		34900 (11400-41800)	3090 (750-3950)	15.01	13.57	99
09+12+12+12	Duct	Duct	Duct	Duct		6500	8800	8800	8800		32900 (11400-41400)	3110 (750-3970)	15.10	13.66	99
09+12+12+15	Non Duct	Non Duct	Non Duct	Non Duct		6800	9000	9000	11300		36100 (11400-43000)	3030 (750-3890)	14.71	13.31	99

MXZ-5B42NA HEATING

Indoor units combination	Indoor type					Heating Capacity (BTU/h)						Outdoor unit power consumption (W)	Current (A)	Current (A)	Power factor (%)
	Unit A	Unit B	Unit C	Unit D	Unit E	Unit A	Unit B	Unit C	Unit D	Unit E	Total		208V	230V	
09+12+12+15	Non Duct	Non Duct	Non Duct	Duct		6900	9100	9100	10800		35900 (11400-42600)	3050 (750-3910)	14.81	13.39	99
09+12+12+15	Non Duct	Non Duct	Duct	Non Duct		6900	9100	8500	11300		35800 (11400-42600)	3050 (750-3910)	14.81	13.39	99
09+12+12+15	Non Duct	Non Duct	Duct	Duct		7000	9200	8400	10600		35200 (11400-42200)	3070 (750-3930)	14.91	13.48	99
09+12+12+15	Non Duct	Duct	Duct	Non Duct		7000	8400	8400	11400		35200 (11400-42200)	3070 (750-3930)	14.91	13.48	99
09+12+12+15	Non Duct	Duct	Duct	Duct		7800	8300	8300	10500		34900 (11400-41800)	3090 (750-3950)	15.01	13.57	99
09+12+12+15	Duct	Non Duct	Non Duct	Non Duct		6300	9100	9100	11300		35800 (11400-42600)	3050 (750-3910)	14.81	13.39	99
09+12+12+15	Duct	Non Duct	Non Duct	Duct		6200	9200	9200	10600		35200 (11400-42200)	3070 (750-3930)	14.91	13.48	99
09+12+12+15	Duct	Non Duct	Duct	Non Duct		6200	9200	8400	11400		35200 (11400-42200)	3070 (750-3930)	14.91	13.48	99
09+12+12+15	Duct	Non Duct	Duct	Duct		6200	9900	8300	10500		34900 (11400-41800)	3090 (750-3950)	15.01	13.57	99
09+12+12+15	Duct	Duct	Duct	Non Duct		6200	8300	8300	12100		34900 (11400-41800)	3090 (750-3950)	15.01	13.57	99
09+12+12+15	Duct	Duct	Duct	Duct		6100	8200	8200	10400		32900 (11400-41400)	3110 (750-3970)	15.10	13.66	99
09+12+12+18	Non Duct	Non Duct	Non Duct	Non Duct		6400	8500	8500	12800		36200 (11400-43000)	3030 (750-3890)	14.71	13.31	99
09+12+12+18	Non Duct	Non Duct	Non Duct	Duct		6500	8600	8600	12200		35900 (11400-42600)	3050 (750-3910)	14.81	13.39	99
09+12+12+18	Non Duct	Non Duct	Duct	Non Duct		6500	8600	8000	12700		35800 (11400-42600)	3050 (750-3910)	14.81	13.39	99
09+12+12+18	Non Duct	Non Duct	Duct	Duct		6700	8700	7900	12100		35400 (11400-42200)	3070 (750-3930)	14.91	13.48	99
09+12+12+18	Non Duct	Duct	Duct	Non Duct		6700	7900	7900	12900		35400 (11400-42200)	3070 (750-3930)	14.91	13.48	99
09+12+12+18	Non Duct	Duct	Duct	Duct		7400	7800	7800	11900		34900 (11400-41800)	3090 (750-3950)	15.01	13.57	99
09+12+12+18	Duct	Non Duct	Non Duct	Non Duct		5900	8600	8600	12700		35800 (11400-42600)	3050 (750-3910)	14.81	13.39	99
09+12+12+18	Duct	Non Duct	Non Duct	Duct		5900	8700	8700	12100		35400 (11400-42200)	3070 (750-3930)	14.91	13.48	99
09+12+12+18	Duct	Non Duct	Duct	Non Duct		5900	8700	7900	12900		35400 (11400-42200)	3070 (750-3930)	14.91	13.48	99
09+12+12+18	Duct	Non Duct	Duct	Duct		5800	9400	7800	11900		34900 (11400-41800)	3090 (750-3950)	15.01	13.57	99
09+12+12+18	Duct	Duct	Duct	Non Duct		5800	7800	7800	13500		34900 (11400-41800)	3090 (750-3950)	15.01	13.57	99
09+12+12+18	Duct	Duct	Duct	Duct		5700	7700	7700	11800		32900 (11400-41400)	3110 (750-3970)	15.10	13.66	99
09+12+15+15	Non Duct	Non Duct	Non Duct	Non Duct		6400	8500	10600	10600		36100 (11400-43000)	3030 (750-3890)	14.71	13.31	99
09+12+15+15	Non Duct	Non Duct	Non Duct	Duct		6500	8600	10700	10100		35900 (11400-42600)	3050 (750-3910)	14.81	13.39	99
09+12+15+15	Non Duct	Non Duct	Duct	Duct		6700	8700	10000	10000		35400 (11400-42200)	3070 (750-3930)	14.91	13.48	99
09+12+15+15	Non Duct	Duct	Non Duct	Non Duct		6500	8000	10700	10700		35900 (11400-42600)	3050 (750-3910)	14.81	13.39	99
09+12+15+15	Non Duct	Duct	Non Duct	Duct		6700	7900	10800	10000		35400 (11400-42200)	3070 (750-3930)	14.91	13.48	99
09+12+15+15	Non Duct	Duct	Duct	Duct		7400	7800	9900	9900		35000 (11400-41800)	3090 (750-3950)	15.01	13.57	99
09+12+15+15	Duct	Non Duct	Non Duct	Non Duct		5900	8600	10700	10700		35900 (11400-42600)	3050 (750-3910)	14.81	13.39	99
09+12+15+15	Duct	Non Duct	Non Duct	Duct		5900	8700	10800	10000		35400 (11400-42200)	3070 (750-3930)	14.91	13.48	99
09+12+15+15	Duct	Non Duct	Duct	Duct		5800	9400	9900	9900		35000 (11400-41800)	3090 (750-3950)	15.01	13.57	99
09+12+15+15	Duct	Duct	Non Duct	Non Duct		5900	7900	10800	10800		35400 (11400-42200)	3070 (750-3930)	14.91	13.48	99
09+12+15+15	Duct	Duct	Non Duct	Duct		5800	7800	11500	9900		35000 (11400-41800)	3090 (750-3950)	15.01	13.57	99
09+12+15+15	Duct	Duct	Duct	Duct		5700	7700	9800	9800		33000 (11400-41400)	3110 (750-3970)	15.10	13.66	99
12+12+12+12	Non Duct	Non Duct	Non Duct	Non Duct		9000	9000	9000	9000		36000 (11400-43000)	3030 (750-3890)	14.71	13.31	99
12+12+12+12	Non Duct	Non Duct	Non Duct	Duct		9100	9100	9100	8500		35800 (11400-42600)	3050 (750-3910)	14.81	13.39	99
12+12+12+12	Non Duct	Non Duct	Duct	Duct		9200	9200	8400	8400		35200 (11400-42200)	3070 (750-3930)	14.91	13.48	99
12+12+12+12	Non Duct	Duct	Duct	Duct		9900	8300	8300	8300		34800 (11400-41800)	3090 (750-3950)	15.01	13.57	99
12+12+12+12	Duct	Duct	Duct	Duct		8200	8200	8200	8200		32800 (11400-41400)	3110 (750-3970)	15.10	13.66	99
12+12+12+15	Non Duct	Non Duct	Non Duct	Non Duct		8500	8500	8500	10600		36100 (11400-43000)	3030 (750-3890)	14.71	13.31	99
12+12+12+15	Non Duct	Non Duct	Non Duct	Duct		8600	8600	8600	10100		35900 (11400-42600)	3050 (750-3910)	14.81	13.39	99
12+12+12+15	Non Duct	Non Duct	Duct	Non Duct		8600	8600	8000	10700		35900 (11400-42600)	3050 (750-3910)	14.81	13.39	99
12+12+12+15	Non Duct	Non Duct	Duct	Duct		8700	8700	7900	10000		35300 (11400-42200)	3070 (750-3930)	14.91	13.48	99
12+12+12+15	Non Duct	Duct	Duct	Non Duct		8700	7900	7900	10800		35300 (11400-42200)	3070 (750-3930)	14.91	13.48	99
12+12+12+15	Non Duct	Duct	Duct	Duct		9400	7800	7800	9900		34900 (11400-41800)	3090 (750-3950)	15.01	13.57	99
12+12+12+15	Duct	Duct	Duct	Non Duct		7800	7800	7800	11500		34900 (11400-41800)	3090 (750-3950)	15.01	13.57	99
12+12+12+15	Duct	Duct	Duct	Duct		7700	7700	7700	9800		32900 (11400-41400)	3110 (750-3970)	15.10	13.66	99
06+06+06+06+06	Non Duct	Non Duct	Non Duct	Non Duct	Non Duct	7600	7600	7600	7600	7600	38000 (11400-48000)	3300 (750-4500)	16.03	14.49	99
06+06+06+06+09	Non Duct	Non Duct	Non Duct	Non Duct	Non Duct	7200	7200	7200	7200	10800	39600 (11400-49500)	3550 (750-4650)	17.24	15.59	99
06+06+06+06+09	Non Duct	Non Duct	Non Duct	Non Duct	Duct	7200	7200	7200	7200	10200	39000 (11400-49100)	3520 (750-4670)	17.09	15.46	99

MXZ-5B42NA HEATING

Indoor units combination	Indoor type					Heating Capacity (BTU/h)						Outdoor unit power consumption (W)	Current (A)	Current (A)	Power factor (%)
	Unit A	Unit B	Unit C	Unit D	Unit E	Unit A	Unit B	Unit C	Unit D	Unit E	Total		208V	230V	
06+06+06+06+12	Non Duct	Non Duct	Non Duct	Non Duct	Non Duct	6900	6900	6900	6900	13800	41400 (11400-50500)	3600 (750-4750)	17.48	15.81	99
06+06+06+06+12	Non Duct	Non Duct	Non Duct	Non Duct	Duct	6900	6900	6900	6900	13100	40700 (11400-50100)	3570 (750-4770)	17.34	15.68	99
06+06+06+06+15	Non Duct	Non Duct	Non Duct	Non Duct	Non Duct	6600	6600	6600	6600	16400	42800 (11400-53600)	3650 (750-5100)	17.73	16.03	99
06+06+06+06+15	Non Duct	Non Duct	Non Duct	Non Duct	Duct	6600	6600	6600	6600	15700	42100 (11400-53200)	3620 (750-5120)	17.58	15.90	99
06+06+06+06+18	Non Duct	Non Duct	Non Duct	Non Duct	Non Duct	6500	6500	6500	6500	19400	45400 (11400-53600)	3770 (750-5100)	18.31	16.56	99
06+06+06+06+18	Non Duct	Non Duct	Non Duct	Non Duct	Duct	6500	6500	6500	6500	18700	44700 (11400-53200)	3740 (750-5120)	18.16	16.43	99
06+06+06+06+24	Non Duct	Non Duct	Non Duct	Non Duct	Non Duct	5800	5800	5800	5800	23000	46200 (11400-53600)	3770 (750-5100)	18.31	16.56	99
06+06+06+09+09	Non Duct	Non Duct	Non Duct	Non Duct	Non Duct	6900	6900	6900	10300	10300	41300 (11400-53600)	3600 (750-5100)	17.48	15.81	99
06+06+06+09+09	Non Duct	Non Duct	Non Duct	Non Duct	Duct	6900	6900	6900	10200	9700	40600 (11400-53200)	3570 (750-5120)	17.34	15.68	99
06+06+06+09+09	Non Duct	Non Duct	Non Duct	Duct	Duct	6900	6900	6900	9500	9500	39700 (11400-52800)	3540 (750-5140)	17.19	15.55	99
06+06+06+09+12	Non Duct	Non Duct	Non Duct	Non Duct	Non Duct	6600	6600	6600	9900	13100	42800 (11400-53600)	3650 (750-5100)	17.73	16.03	99
06+06+06+09+12	Non Duct	Non Duct	Non Duct	Non Duct	Duct	6600	6600	6600	9800	12500	42100 (11400-53200)	3620 (750-5120)	17.58	15.90	99
06+06+06+09+12	Non Duct	Non Duct	Non Duct	Duct	Non Duct	6600	6600	6600	9300	13000	42100 (11400-53200)	3620 (750-5120)	17.58	15.90	99
06+06+06+09+12	Non Duct	Non Duct	Non Duct	Duct	Duct	6600	6600	6600	9100	12200	41100 (11400-52800)	3590 (750-5140)	17.43	15.77	99
06+06+06+09+15	Non Duct	Non Duct	Non Duct	Non Duct	Non Duct	6500	6500	6500	9700	16200	45400 (11400-53600)	3780 (750-5100)	18.36	16.60	99
06+06+06+09+15	Non Duct	Non Duct	Non Duct	Non Duct	Duct	6500	6500	6500	9700	15500	44700 (11400-53200)	3750 (750-5120)	18.21	16.47	99
06+06+06+09+15	Non Duct	Non Duct	Non Duct	Duct	Non Duct	6500	6500	6500	9200	16000	44700 (11400-53200)	3750 (750-5120)	18.21	16.47	99
06+06+06+09+15	Non Duct	Non Duct	Non Duct	Duct	Duct	6500	6500	6500	9000	15200	43700 (11400-52800)	3720 (750-5140)	18.07	16.34	99
06+06+06+09+18	Non Duct	Non Duct	Non Duct	Non Duct	Non Duct	6100	6100	6100	9100	18200	45600 (11400-53600)	3800 (750-5100)	18.45	16.69	99
06+06+06+09+18	Non Duct	Non Duct	Non Duct	Non Duct	Duct	6100	6100	6100	9100	17500	44900 (11400-53200)	3770 (750-5120)	18.31	16.56	99
06+06+06+09+18	Non Duct	Non Duct	Non Duct	Duct	Non Duct	6100	6100	6100	8600	18000	44900 (11400-53200)	3770 (750-5120)	18.31	16.56	99
06+06+06+09+18	Non Duct	Non Duct	Non Duct	Duct	Duct	6200	6200	6200	8400	17200	44200 (11400-52800)	3740 (750-5140)	18.16	16.43	99
06+06+06+09+24	Non Duct	Non Duct	Non Duct	Non Duct	Non Duct	5500	5500	5500	8200	21700	46400 (11400-53600)	3770 (750-5100)	18.31	16.56	99
06+06+06+09+24	Non Duct	Non Duct	Non Duct	Duct	Non Duct	5500	5500	5500	7600	21400	45500 (11400-53200)	3740 (750-5120)	18.16	16.43	99
06+06+06+12+12	Non Duct	Non Duct	Non Duct	Non Duct	Non Duct	6500	6500	6500	13000	13000	45500 (11400-53600)	3780 (750-5100)	18.36	16.60	99
06+06+06+12+12	Non Duct	Non Duct	Non Duct	Non Duct	Duct	6500	6500	6500	12800	12300	44600 (11400-53200)	3750 (750-5120)	18.21	16.47	99
06+06+06+12+12	Non Duct	Non Duct	Non Duct	Duct	Duct	6500	6500	6500	12100	12100	43700 (11400-52800)	3720 (750-5140)	18.07	16.34	99
06+06+06+12+15	Non Duct	Non Duct	Non Duct	Non Duct	Non Duct	6100	6100	6100	12200	15200	45700 (11400-53600)	3800 (750-5100)	18.45	16.69	99
06+06+06+12+15	Non Duct	Non Duct	Non Duct	Non Duct	Duct	6100	6100	6100	12100	14500	44900 (11400-53200)	3770 (750-5120)	18.31	16.56	99
06+06+06+12+15	Non Duct	Non Duct	Non Duct	Duct	Non Duct	6100	6100	6100	11600	15000	44900 (11400-53200)	3770 (750-5120)	18.31	16.56	99
06+06+06+12+15	Non Duct	Non Duct	Non Duct	Duct	Duct	6200	6200	6200	11400	14300	44300 (11400-52800)	3740 (750-5140)	18.16	16.43	99
06+06+06+12+18	Non Duct	Non Duct	Non Duct	Non Duct	Non Duct	5700	5700	5700	11400	17100	45600 (11400-53600)	3800 (750-5100)	18.45	16.69	99
06+06+06+12+18	Non Duct	Non Duct	Non Duct	Non Duct	Duct	5900	5900	5900	11600	16900	46200 (11400-53200)	3770 (750-5120)	18.31	16.56	99
06+06+06+12+18	Non Duct	Non Duct	Non Duct	Duct	Non Duct	5800	5800	5800	10900	17100	45400 (11400-53200)	3770 (750-5120)	18.31	16.56	99
06+06+06+12+18	Non Duct	Non Duct	Non Duct	Duct	Duct	5900	5900	5900	10700	16300	44700 (11400-52800)	3740 (750-5140)	18.16	16.43	99
06+06+06+15+15	Non Duct	Non Duct	Non Duct	Non Duct	Non Duct	5800	5800	5800	14400	14400	46200 (11400-53600)	3800 (750-5100)	18.45	16.69	99
06+06+06+15+15	Non Duct	Non Duct	Non Duct	Non Duct	Duct	5800	5800	5800	14300	13800	45500 (11400-53200)	3770 (750-5120)	18.31	16.56	99
06+06+06+15+15	Non Duct	Non Duct	Non Duct	Duct	Duct	5900	5900	5900	13500	13500	44700 (11400-52800)	3740 (750-5140)	18.16	16.43	99
06+06+06+15+18	Non Duct	Non Duct	Non Duct	Non Duct	Non Duct	5500	5500	5500	13600	16300	46400 (11400-53600)	3770 (750-5100)	18.31	16.56	99
06+06+06+15+18	Non Duct	Non Duct	Non Duct	Non Duct	Duct	5500	5500	5500	13400	15600	45500 (11400-53200)	3740 (750-5120)	18.16	16.43	99
06+06+06+15+18	Non Duct	Non Duct	Non Duct	Duct	Non Duct	5500	5500	5500	12900	16100	45500 (11400-53200)	3740 (750-5120)	18.16	16.43	99
06+06+06+15+18	Non Duct	Non Duct	Non Duct	Duct	Duct	5500	5500	5500	12700	15300	44500 (11400-52800)	3710 (750-5140)	18.02	16.29	99
06+06+09+09+09	Non Duct	Non Duct	Non Duct	Non Duct	Non Duct	6600	6600	9900	9900	9900	42900 (11400-53600)	3650 (750-5100)	17.73	16.03	99
06+06+09+09+09	Non Duct	Non Duct	Non Duct	Non Duct	Duct	6600	6600	9800	9800	9300	42100 (11400-53200)	3620 (750-5120)	17.58	15.90	99
06+06+09+09+09	Non Duct	Non Duct	Non Duct	Duct	Duct	6600	6600	9800	9100	9100	41200 (11400-52800)	3590 (750-5140)	17.43	15.77	99
06+06+09+09+09	Non Duct	Non Duct	Duct	Duct	Duct	6800	6800	8900	8900	8900	40300 (11400-52400)	3560 (750-5160)	17.29	15.63	99
06+06+09+09+12	Non Duct	Non Duct	Non Duct	Non Duct	Non Duct	6500	6500	9700	9700	13000	45400 (11400-53600)	3780 (750-5100)	18.36	16.60	99
06+06+09+09+12	Non Duct	Non Duct	Non Duct	Non Duct	Duct	6500	6500	9700	9700	12300	44700 (11400-53200)	3750 (750-5120)	18.21	16.47	99
06+06+09+09+12	Non Duct	Non Duct	Non Duct	Duct	Non Duct	6500	6500	9700	9200	12800	44700 (11400-53200)	3750 (750-5120)	18.21	16.47	99
06+06+09+09+12	Non Duct	Non Duct	Non Duct	Duct	Duct	6500	6500	9700	9000	12100	43800 (11400-52800)	3720 (750-5140)	18.07	16.34	99
06+06+09+09+12	Non Duct	Non Duct	Duct	Duct	Non Duct	6500	6500	9000	9000	12800	43800 (11400-52800)	3720 (750-5140)	18.07	16.34	99

MXZ-5B42NA HEATING

Indoor units combination	Indoor type					Heating Capacity (BTU/h)						Outdoor unit power consumption (W)	Current (A)	Current (A)	Power factor (%)
	Unit A	Unit B	Unit C	Unit D	Unit E	Unit A	Unit B	Unit C	Unit D	Unit E	Total		208V	230V	
06+06+09+09+12	Non Duct	Non Duct	Duct	Duct	Duct	6800	6800	8800	8800	11900	43100 (11400-52400)	3690 (750-5160)	17.92	16.21	99
06+06+09+09+15	Non Duct	Non Duct	Non Duct	Non Duct	Non Duct	6100	6100	9100	9100	15200	45600 (11400-53600)	3800 (750-5100)	18.45	16.69	99
06+06+09+09+15	Non Duct	Non Duct	Non Duct	Non Duct	Duct	6100	6100	9100	9100	14500	44900 (11400-53200)	3770 (750-5120)	18.31	16.56	99
06+06+09+09+15	Non Duct	Non Duct	Non Duct	Duct	Non Duct	6100	6100	9100	8600	15000	44900 (11400-53200)	3770 (750-5120)	18.31	16.56	99
06+06+09+09+15	Non Duct	Non Duct	Non Duct	Duct	Duct	6200	6200	9100	8400	14300	44200 (11400-52800)	3740 (750-5140)	18.16	16.43	99
06+06+09+09+15	Non Duct	Non Duct	Duct	Duct	Non Duct	6200	6200	8400	8400	14900	44100 (11400-52800)	3740 (750-5140)	18.16	16.43	99
06+06+09+09+15	Non Duct	Non Duct	Duct	Duct	Duct	6400	6400	8300	8300	14000	43400 (11400-52400)	3710 (750-5160)	18.02	16.29	99
06+06+09+09+18	Non Duct	Non Duct	Non Duct	Non Duct	Non Duct	5800	5800	8700	8700	17300	46300 (11400-53600)	3770 (750-5100)	18.31	16.56	99
06+06+09+09+18	Non Duct	Non Duct	Non Duct	Non Duct	Duct	5800	5800	8600	8600	16600	45400 (11400-53200)	3740 (750-5120)	18.16	16.43	99
06+06+09+09+18	Non Duct	Non Duct	Non Duct	Duct	Non Duct	5800	5800	8600	8100	17100	45400 (11400-53200)	3740 (750-5120)	18.16	16.43	99
06+06+09+09+18	Non Duct	Non Duct	Non Duct	Duct	Duct	5900	5900	8600	8000	16300	44700 (11400-52800)	3710 (750-5140)	18.02	16.29	99
06+06+09+09+18	Non Duct	Non Duct	Duct	Duct	Non Duct	5900	5900	8000	8000	17000	44800 (11400-52800)	3710 (750-5140)	18.02	16.29	99
06+06+09+09+18	Non Duct	Non Duct	Duct	Duct	Duct	6100	6100	7800	7800	16000	43800 (11400-52400)	3680 (750-5160)	17.87	16.16	99
06+06+09+12+12	Non Duct	Non Duct	Non Duct	Non Duct	Non Duct	6100	6100	9100	12200	12200	45700 (11400-53600)	3800 (750-5100)	18.45	16.69	99
06+06+09+12+12	Non Duct	Non Duct	Non Duct	Non Duct	Duct	6100	6100	9100	12100	11600	45000 (11400-53200)	3770 (750-5120)	18.31	16.56	99
06+06+09+12+12	Non Duct	Non Duct	Non Duct	Duct	Duct	6200	6200	9100	11400	11400	44300 (11400-52800)	3740 (750-5140)	18.16	16.43	99
06+06+09+12+12	Non Duct	Non Duct	Duct	Non Duct	Non Duct	6100	6100	8600	12100	12100	45000 (11400-53200)	3770 (750-5120)	18.31	16.56	99
06+06+09+12+12	Non Duct	Non Duct	Duct	Non Duct	Duct	6200	6200	8400	12000	11400	44200 (11400-52800)	3740 (750-5140)	18.16	16.43	99
06+06+09+12+12	Non Duct	Non Duct	Duct	Duct	Duct	6400	6400	8300	11100	11100	43300 (11400-52400)	3710 (750-5160)	18.02	16.29	99
06+06+09+12+15	Non Duct	Non Duct	Non Duct	Non Duct	Non Duct	5800	5800	8700	11500	14400	46200 (11400-53600)	3770 (750-5100)	18.31	16.56	99
06+06+09+12+15	Non Duct	Non Duct	Non Duct	Non Duct	Duct	5800	5800	8600	11400	13800	45400 (11400-53200)	3740 (750-5120)	18.16	16.43	99
06+06+09+12+15	Non Duct	Non Duct	Non Duct	Duct	Non Duct	5800	5800	8600	10900	14300	45400 (11400-53200)	3740 (750-5120)	18.16	16.43	99
06+06+09+12+15	Non Duct	Non Duct	Non Duct	Duct	Duct	5900	5900	8600	10700	13500	44600 (11400-52800)	3710 (750-5140)	18.02	16.29	99
06+06+09+12+15	Non Duct	Non Duct	Duct	Non Duct	Non Duct	5800	5800	8100	11400	14300	45400 (11400-53200)	3740 (750-5120)	18.16	16.43	99
06+06+09+12+15	Non Duct	Non Duct	Duct	Non Duct	Duct	5900	5900	8000	11400	13500	44700 (11400-52800)	3710 (750-5140)	18.02	16.29	99
06+06+09+12+15	Non Duct	Non Duct	Duct	Duct	Non Duct	5900	5900	8000	10700	14200	44700 (11400-52800)	3710 (750-5140)	18.02	16.29	99
06+06+09+12+15	Non Duct	Non Duct	Duct	Duct	Duct	6100	6100	7800	10500	13300	43800 (11400-52400)	3680 (750-5160)	17.87	16.16	99
06+06+09+12+18	Non Duct	Non Duct	Non Duct	Non Duct	Non Duct	5500	5500	8200	10900	16300	46400 (11400-53600)	3770 (750-5100)	18.31	16.56	99
06+06+09+12+18	Non Duct	Non Duct	Non Duct	Non Duct	Duct	5500	5500	8100	10800	15600	45500 (11400-53200)	3740 (750-5120)	18.16	16.43	99
06+06+09+12+18	Non Duct	Non Duct	Non Duct	Duct	Non Duct	5500	5500	8100	10300	16100	45500 (11400-53200)	3740 (750-5120)	18.16	16.43	99
06+06+09+12+18	Non Duct	Non Duct	Non Duct	Duct	Duct	5500	5500	8200	10100	15300	44600 (11400-52800)	3710 (750-5140)	18.02	16.29	99
06+06+09+12+18	Non Duct	Non Duct	Duct	Non Duct	Non Duct	5500	5500	7600	10800	16100	45500 (11400-53200)	3740 (750-5120)	18.16	16.43	99
06+06+09+12+18	Non Duct	Non Duct	Duct	Non Duct	Duct	5500	5500	7500	10800	15300	44600 (11400-52800)	3710 (750-5140)	18.02	16.29	99
06+06+09+12+18	Non Duct	Non Duct	Duct	Duct	Non Duct	5500	5500	7500	10100	16000	44600 (11400-52800)	3710 (750-5140)	18.02	16.29	99
06+06+09+12+18	Non Duct	Non Duct	Duct	Duct	Duct	5800	5800	7300	9900	15000	43800 (11400-52400)	3680 (750-5160)	17.87	16.16	99
06+06+09+15+15	Non Duct	Non Duct	Non Duct	Non Duct	Non Duct	5500	5500	8200	13600	13600	46400 (11400-53600)	3770 (750-5100)	18.31	16.56	99
06+06+09+15+15	Non Duct	Non Duct	Non Duct	Non Duct	Duct	5500	5500	8100	13400	12900	45400 (11400-53200)	3740 (750-5120)	18.16	16.43	99
06+06+09+15+15	Non Duct	Non Duct	Non Duct	Duct	Duct	5500	5500	8200	12700	12700	44600 (11400-52800)	3710 (750-5140)	18.02	16.29	99
06+06+09+15+15	Non Duct	Non Duct	Duct	Non Duct	Non Duct	5500	5500	7600	13400	13400	45400 (11400-53200)	3740 (750-5120)	18.16	16.43	99
06+06+09+15+15	Non Duct	Non Duct	Duct	Non Duct	Duct	5500	5500	7500	13400	12700	44600 (11400-52800)	3710 (750-5140)	18.02	16.29	99
06+06+09+15+15	Non Duct	Non Duct	Duct	Duct	Duct	5800	5800	7300	12500	12500	43900 (11400-52400)	3680 (750-5160)	17.87	16.16	99
06+06+12+12+12	Non Duct	Non Duct	Non Duct	Non Duct	Non Duct	5800	5800	11500	11500	11500	46100 (11400-53600)	3770 (750-5100)	18.31	16.56	99
06+06+12+12+12	Non Duct	Non Duct	Non Duct	Non Duct	Duct	5800	5800	11400	11400	10900	45300 (11400-53200)	3740 (750-5120)	18.16	16.43	99
06+06+12+12+12	Non Duct	Non Duct	Non Duct	Duct	Duct	5900	5900	11400	10700	10700	44600 (11400-52800)	3710 (750-5140)	18.02	16.29	99
06+06+12+12+12	Non Duct	Non Duct	Duct	Duct	Duct	6100	6100	10500	10500	10500	43700 (11400-52400)	3680 (750-5160)	17.87	16.16	99
06+06+12+12+15	Non Duct	Non Duct	Non Duct	Non Duct	Non Duct	5500	5500	10900	10900	13600	46400 (11400-53600)	3770 (750-5100)	18.31	16.56	99
06+06+12+12+15	Non Duct	Non Duct	Non Duct	Non Duct	Duct	5500	5500	10800	10800	12900	45500 (11400-53200)	3740 (750-5120)	18.16	16.43	99
06+06+12+12+15	Non Duct	Non Duct	Non Duct	Duct	Non Duct	5500	5500	10800	10300	13400	45500 (11400-53200)	3740 (750-5120)	18.16	16.43	99
06+06+12+12+15	Non Duct	Non Duct	Non Duct	Duct	Duct	5500	5500	10800	10100	12700	44600 (11400-52800)	3710 (750-5140)	18.02	16.29	99
06+06+12+12+15	Non Duct	Non Duct	Duct	Duct	Non Duct	5500	5500	10100	10100	13400	44600 (11400-52800)	3710 (750-5140)	18.02	16.29	99
06+06+12+12+15	Non Duct	Non Duct	Duct	Duct	Duct	5800	5800	9900	9900	12500	43900 (11400-52400)	3680 (750-5160)	17.87	16.16	99

MXZ-5B42NA HEATING

Indoor units combination	Indoor type					Heating Capacity (BTU/h)						Outdoor unit power consumption (W)	Current (A)	Current (A)	Power factor (%)
	Unit A	Unit B	Unit C	Unit D	Unit E	Unit A	Unit B	Unit C	Unit D	Unit E	Total		208V	230V	
06+09+09+09+09	Non Duct	Non Duct	Non Duct	Non Duct	Non Duct	6400	9700	9700	9700	9700	45200 (11400-53600)	3780 (750-5100)	18.36	16.60	99
06+09+09+09+09	Non Duct	Non Duct	Non Duct	Non Duct	Duct	6500	9700	9700	9700	9200	44800 (11400-53200)	3750 (750-5120)	18.21	16.47	99
06+09+09+09+09	Non Duct	Non Duct	Non Duct	Duct	Duct	6500	9700	9700	9000	9000	43900 (11400-52800)	3720 (750-5140)	18.07	16.34	99
06+09+09+09+09	Non Duct	Non Duct	Duct	Duct	Duct	6800	9800	8800	8800	8800	43000 (11400-52400)	3690 (750-5160)	17.92	16.21	99
06+09+09+09+09	Non Duct	Duct	Duct	Duct	Duct	7600	8600	8600	8600	8600	42000 (11400-52000)	3660 (750-5180)	17.77	16.07	99
06+09+09+09+12	Non Duct	Non Duct	Non Duct	Non Duct	Non Duct	6100	9100	9100	9100	12100	45500 (11400-53600)	3800 (750-5100)	18.45	16.69	99
06+09+09+09+12	Non Duct	Non Duct	Non Duct	Non Duct	Duct	6100	9000	9000	9000	11500	44600 (11400-53200)	3770 (750-5120)	18.31	16.56	99
06+09+09+09+12	Non Duct	Non Duct	Non Duct	Duct	Non Duct	6100	9000	9000	8500	12000	44600 (11400-53200)	3770 (750-5120)	18.31	16.56	99
06+09+09+09+12	Non Duct	Non Duct	Non Duct	Duct	Duct	6100	9100	9100	8400	11300	44000 (11400-52800)	3740 (750-5140)	18.16	16.43	99
06+09+09+09+12	Non Duct	Non Duct	Duct	Duct	Non Duct	6100	9100	8400	8400	12000	44000 (11400-52800)	3740 (750-5140)	18.16	16.43	99
06+09+09+09+12	Non Duct	Non Duct	Duct	Duct	Duct	6400	9200	8200	8200	11100	43100 (11400-52400)	3710 (750-5160)	18.02	16.29	99
06+09+09+09+12	Non Duct	Duct	Duct	Duct	Non Duct	6400	8200	8200	8200	12100	43100 (11400-52400)	3710 (750-5160)	18.02	16.29	99
06+09+09+09+12	Non Duct	Duct	Duct	Duct	Duct	7300	8100	8100	8100	10900	42500 (11400-52000)	3680 (750-5180)	17.87	16.16	99
06+09+09+09+15	Non Duct	Non Duct	Non Duct	Non Duct	Non Duct	5800	8700	8700	8700	14400	46300 (11400-53600)	3770 (750-5100)	18.31	16.56	99
06+09+09+09+15	Non Duct	Non Duct	Non Duct	Non Duct	Duct	5800	8600	8600	8600	13800	45400 (11400-53200)	3740 (750-5120)	18.16	16.43	99
06+09+09+09+15	Non Duct	Non Duct	Non Duct	Duct	Non Duct	5800	8600	8600	8100	14300	45400 (11400-53200)	3740 (750-5120)	18.16	16.43	99
06+09+09+09+15	Non Duct	Non Duct	Non Duct	Duct	Duct	5900	8600	8600	8000	13500	44600 (11400-52800)	3710 (750-5140)	18.02	16.29	99
06+09+09+09+15	Non Duct	Non Duct	Duct	Duct	Non Duct	5900	8600	8000	8000	14200	44700 (11400-52800)	3710 (750-5140)	18.02	16.29	99
06+09+09+09+15	Non Duct	Non Duct	Duct	Duct	Duct	6100	8800	7800	7800	13300	43800 (11400-52400)	3680 (750-5160)	17.87	16.16	99
06+09+09+09+15	Non Duct	Duct	Duct	Duct	Non Duct	6100	7800	7800	7800	14300	43800 (11400-52400)	3680 (750-5160)	17.87	16.16	99
06+09+09+09+15	Non Duct	Duct	Duct	Duct	Duct	7000	7700	7700	7700	13000	43100 (11400-52000)	3650 (750-5180)	17.73	16.03	99
06+09+09+09+18	Non Duct	Non Duct	Non Duct	Non Duct	Non Duct	5500	8200	8200	8200	16300	46400 (11400-53600)	3770 (750-5100)	18.31	16.56	99
06+09+09+09+18	Non Duct	Non Duct	Non Duct	Non Duct	Duct	5500	8100	8100	8100	15600	45400 (11400-53200)	3740 (750-5120)	18.16	16.43	99
06+09+09+09+18	Non Duct	Non Duct	Non Duct	Duct	Non Duct	5500	8100	8100	7600	16100	45400 (11400-53200)	3740 (750-5120)	18.16	16.43	99
06+09+09+09+18	Non Duct	Non Duct	Non Duct	Duct	Duct	5500	8200	8200	7500	15300	44700 (11400-52800)	3710 (750-5140)	18.02	16.29	99
06+09+09+09+18	Non Duct	Non Duct	Duct	Duct	Non Duct	5500	8200	7500	7500	16000	44700 (11400-52800)	3710 (750-5140)	18.02	16.29	99
06+09+09+09+18	Non Duct	Non Duct	Duct	Duct	Duct	5800	8300	7300	7300	15000	43700 (11400-52400)	3680 (750-5160)	17.87	16.16	99
06+09+09+09+18	Non Duct	Duct	Duct	Duct	Non Duct	5800	7300	7300	7300	16000	43700 (11400-52400)	3680 (750-5160)	17.87	16.16	99
06+09+09+09+18	Non Duct	Duct	Duct	Duct	Duct	6700	7200	7200	7200	14800	43100 (11400-52000)	3650 (750-5180)	17.73	16.03	99
06+09+09+12+12	Non Duct	Non Duct	Non Duct	Non Duct	Non Duct	5800	8700	8700	11500	11500	46200 (11400-53600)	3770 (750-5100)	18.31	16.56	99
06+09+09+12+12	Non Duct	Non Duct	Non Duct	Non Duct	Duct	5800	8600	8600	11400	10900	45300 (11400-53200)	3740 (750-5120)	18.16	16.43	99
06+09+09+12+12	Non Duct	Non Duct	Non Duct	Duct	Duct	5900	8600	8600	10700	10700	44500 (11400-52800)	3710 (750-5140)	18.02	16.29	99
06+09+09+12+12	Non Duct	Non Duct	Duct	Non Duct	Non Duct	5800	8600	8100	11400	11400	45300 (11400-53200)	3740 (750-5120)	18.16	16.43	99
06+09+09+12+12	Non Duct	Non Duct	Duct	Non Duct	Duct	5900	8600	8000	11400	10700	44600 (11400-52800)	3710 (750-5140)	18.02	16.29	99
06+09+09+12+12	Non Duct	Non Duct	Duct	Duct	Duct	6100	8800	7800	10500	10500	43700 (11400-52400)	3680 (750-5160)	17.87	16.16	99
06+09+09+12+12	Non Duct	Duct	Duct	Non Duct	Non Duct	5900	8000	8000	11400	11400	44700 (11400-52800)	3710 (750-5140)	18.02	16.29	99
06+09+09+12+12	Non Duct	Duct	Duct	Non Duct	Duct	6100	7800	7800	11500	10500	43700 (11400-52400)	3680 (750-5160)	17.87	16.16	99
06+09+09+12+12	Non Duct	Duct	Duct	Duct	Duct	7000	7700	7700	10300	10300	43000 (11400-52000)	3650 (750-5180)	17.73	16.03	99
06+09+09+12+15	Non Duct	Non Duct	Non Duct	Non Duct	Non Duct	5500	8200	8200	10900	13600	46400 (11400-53600)	3770 (750-5100)	18.31	16.56	99
06+09+09+12+15	Non Duct	Non Duct	Non Duct	Non Duct	Duct	5500	8100	8100	10800	12900	45400 (11400-53200)	3740 (750-5120)	18.16	16.43	99
06+09+09+12+15	Non Duct	Non Duct	Non Duct	Duct	Non Duct	5500	8100	8100	10300	13400	45400 (11400-53200)	3740 (750-5120)	18.16	16.43	99
06+09+09+12+15	Non Duct	Non Duct	Non Duct	Duct	Duct	5500	8200	8200	10100	12700	44700 (11400-52800)	3710 (750-5140)	18.02	16.29	99
06+09+09+12+15	Non Duct	Non Duct	Duct	Non Duct	Non Duct	5500	8100	7600	10800	13400	45400 (11400-53200)	3740 (750-5120)	18.16	16.43	99
06+09+09+12+15	Non Duct	Non Duct	Duct	Non Duct	Duct	5500	8200	7500	10800	12700	44700 (11400-52800)	3710 (750-5140)	18.02	16.29	99
06+09+09+12+15	Non Duct	Non Duct	Duct	Duct	Non Duct	5500	8200	7500	10100	13400	44700 (11400-52800)	3710 (750-5140)	18.02	16.29	99
06+09+09+12+15	Non Duct	Non Duct	Duct	Duct	Duct	5800	8300	7300	9900	12500	43800 (11400-52400)	3680 (750-5160)	17.87	16.16	99
06+09+09+12+15	Non Duct	Duct	Duct	Non Duct	Non Duct	5500	7500	7500	10800	13400	44700 (11400-52800)	3710 (750-5140)	18.02	16.29	99
06+09+09+12+15	Non Duct	Duct	Duct	Non Duct	Duct	5800	7300	7300	10900	12500	43800 (11400-52400)	3680 (750-5160)	17.87	16.16	99
06+09+09+12+15	Non Duct	Duct	Duct	Duct	Non Duct	5800	7300	7300	9900	13500	43800 (11400-52400)	3680 (750-5160)	17.87	16.16	99
06+09+09+12+15	Non Duct	Duct	Duct	Duct	Duct	6700	7200	7200	9700	12200	43000 (11400-52000)	3650 (750-5180)	17.73	16.03	99
06+09+12+12+12	Non Duct	Non Duct	Non Duct	Non Duct	Non Duct	5500	8200	10900	10900	10900	46400 (11400-53600)	3740 (750-5100)	18.16	16.43	99

MXZ-5B42NA HEATING

Indoor units combination	Indoor type					Heating Capacity (BTU/h)						Outdoor unit power consumption (W)	Current (A)	Current (A)	Power factor (%)
	Unit A	Unit B	Unit C	Unit D	Unit E	Unit A	Unit B	Unit C	Unit D	Unit E	Total		208V	230V	
06+09+12+12+12	Non Duct	Non Duct	Non Duct	Non Duct	Duct	5500	8100	10800	10800	10300	45500 (11400-53200)	3710 (750-5120)	18.02	16.29	99
06+09+12+12+12	Non Duct	Non Duct	Non Duct	Duct	Duct	5500	8200	10800	10100	10100	44700 (11400-52800)	3680 (750-5140)	17.87	16.16	99
06+09+12+12+12	Non Duct	Non Duct	Duct	Duct	Duct	5800	8300	9900	9900	9900	43800 (11400-52400)	3650 (750-5160)	17.73	16.03	99
06+09+12+12+12	Non Duct	Duct	Non Duct	Non Duct	Non Duct	5500	7600	10800	10800	10800	45500 (11400-53200)	3710 (750-5120)	18.02	16.29	99
06+09+12+12+12	Non Duct	Duct	Non Duct	Non Duct	Duct	5500	7500	10800	10800	10100	44700 (11400-52800)	3680 (750-5140)	17.87	16.16	99
06+09+12+12+12	Non Duct	Duct	Non Duct	Duct	Duct	5800	7300	10900	9900	9900	43800 (11400-52400)	3650 (750-5160)	17.73	16.03	99
06+09+12+12+12	Non Duct	Duct	Duct	Duct	Duct	6700	7200	9700	9700	9700	43000 (11400-52000)	3620 (750-5180)	17.58	15.90	99
09+09+09+09+09	Non Duct	Non Duct	Non Duct	Non Duct	Non Duct	9100	9100	9100	9100	9100	45500 (11400-53600)	3810 (750-5100)	18.50	16.73	99
09+09+09+09+09	Non Duct	Non Duct	Non Duct	Non Duct	Duct	9100	9100	9100	9100	8600	45000 (11400-53200)	3780 (750-5120)	18.36	16.60	99
09+09+09+09+09	Non Duct	Non Duct	Non Duct	Duct	Duct	9100	9100	9100	8400	8400	44100 (11400-52800)	3750 (750-5140)	18.21	16.47	99
09+09+09+09+09	Non Duct	Non Duct	Duct	Duct	Duct	9300	9300	8300	8300	8300	43500 (11400-52400)	3720 (750-5160)	18.07	16.34	99
09+09+09+09+09	Non Duct	Duct	Duct	Duct	Duct	10100	8100	8100	8100	8100	42500 (11400-52000)	3690 (750-5180)	17.92	16.21	99
09+09+09+09+09	Duct	Duct	Duct	Duct	Duct	8240	8240	8240	8240	8240	41200 (11400-51600)	3660 (750-5200)	17.77	16.07	99
09+09+09+09+12	Non Duct	Non Duct	Non Duct	Non Duct	Non Duct	8700	8700	8700	8700	11500	46300 (11400-53600)	3800 (750-5100)	18.45	16.69	99
09+09+09+09+12	Non Duct	Non Duct	Non Duct	Non Duct	Duct	8600	8600	8600	8600	10900	45300 (11400-53200)	3770 (750-5120)	18.31	16.56	99
09+09+09+09+12	Non Duct	Non Duct	Non Duct	Duct	Non Duct	8600	8600	8600	8100	11400	45300 (11400-53200)	3770 (750-5120)	18.31	16.56	99
09+09+09+09+12	Non Duct	Non Duct	Non Duct	Duct	Duct	8600	8600	8600	8000	10700	44500 (11400-52800)	3740 (750-5140)	18.16	16.43	99
09+09+09+09+12	Non Duct	Non Duct	Duct	Duct	Non Duct	8600	8600	8000	8000	11400	44600 (11400-52800)	3740 (750-5140)	18.16	16.43	99
09+09+09+09+12	Non Duct	Non Duct	Duct	Duct	Duct	8800	8800	7800	7800	10500	43700 (11400-52400)	3710 (750-5160)	18.02	16.29	99
09+09+09+09+12	Non Duct	Duct	Duct	Duct	Non Duct	8800	7800	7800	7800	11500	43700 (11400-52400)	3710 (750-5160)	18.02	16.29	99
09+09+09+09+12	Non Duct	Duct	Duct	Duct	Duct	9700	7700	7700	7700	10300	43100 (11400-52000)	3680 (750-5180)	17.87	16.16	99
09+09+09+09+12	Duct	Duct	Duct	Duct	Non Duct	7700	7700	7700	7700	12300	43100 (11400-52000)	3680 (750-5180)	17.87	16.16	99
09+09+09+09+12	Duct	Duct	Duct	Duct	Duct	7500	7500	7500	7500	10100	40100 (11400-51600)	3650 (750-5200)	17.73	16.03	99
09+09+09+09+15	Non Duct	Non Duct	Non Duct	Non Duct	Non Duct	8200	8200	8200	8200	13600	46400 (11400-53600)	3770 (750-5100)	18.31	16.56	99
09+09+09+09+15	Non Duct	Non Duct	Non Duct	Non Duct	Duct	8100	8100	8100	8100	12900	45300 (11400-53200)	3740 (750-5120)	18.16	16.43	99
09+09+09+09+15	Non Duct	Non Duct	Non Duct	Duct	Non Duct	8100	8100	8100	7600	13400	45300 (11400-53200)	3740 (750-5120)	18.16	16.43	99
09+09+09+09+15	Non Duct	Non Duct	Non Duct	Duct	Duct	8200	8200	8200	7500	12700	44800 (11400-52800)	3710 (750-5140)	18.02	16.29	99
09+09+09+09+15	Non Duct	Non Duct	Duct	Duct	Non Duct	8200	8200	7500	7500	13400	44800 (11400-52800)	3710 (750-5140)	18.02	16.29	99
09+09+09+09+15	Non Duct	Non Duct	Duct	Duct	Duct	8300	8300	7300	7300	12500	43700 (11400-52400)	3680 (750-5160)	17.87	16.16	99
09+09+09+09+15	Non Duct	Duct	Duct	Duct	Non Duct	8300	7300	7300	7300	13500	43700 (11400-52400)	3680 (750-5160)	17.87	16.16	99
09+09+09+09+15	Non Duct	Duct	Duct	Duct	Duct	9200	7200	7200	7200	12200	43000 (11400-52000)	3650 (750-5180)	17.73	16.03	99
09+09+09+09+15	Duct	Duct	Duct	Duct	Non Duct	7200	7200	7200	7200	14200	43000 (11400-52000)	3650 (750-5180)	17.73	16.03	99
09+09+09+09+15	Duct	Duct	Duct	Duct	Duct	7100	7100	7100	7100	12000	40400 (11400-51600)	3620 (750-5200)	17.58	15.90	99
09+09+09+12+12	Non Duct	Non Duct	Non Duct	Non Duct	Non Duct	8200	8200	8200	10900	10900	46400 (11400-53600)	3770 (750-5100)	18.31	16.56	99
09+09+09+12+12	Non Duct	Non Duct	Non Duct	Non Duct	Duct	8100	8100	8100	10800	10300	45400 (11400-53200)	3740 (750-5120)	18.16	16.43	99
09+09+09+12+12	Non Duct	Non Duct	Non Duct	Duct	Duct	8200	8200	8200	10100	10100	44800 (11400-52800)	3710 (750-5140)	18.02	16.29	99
09+09+09+12+12	Non Duct	Non Duct	Duct	Non Duct	Non Duct	8100	8100	7600	10800	10800	45400 (11400-53200)	3740 (750-5120)	18.16	16.43	99
09+09+09+12+12	Non Duct	Non Duct	Duct	Non Duct	Duct	8200	8200	7500	10800	10100	44800 (11400-52800)	3710 (750-5140)	18.02	16.29	99
09+09+09+12+12	Non Duct	Non Duct	Duct	Duct	Duct	8300	8300	7300	9900	9900	43700 (11400-52400)	3680 (750-5160)	17.87	16.16	99
09+09+09+12+12	Non Duct	Duct	Duct	Non Duct	Non Duct	8200	7500	7500	10800	10800	44800 (11400-52800)	3710 (750-5140)	18.02	16.29	99
09+09+09+12+12	Non Duct	Duct	Duct	Non Duct	Duct	8300	7300	7300	10900	9900	43700 (11400-52400)	3680 (750-5160)	17.87	16.16	99
09+09+09+12+12	Non Duct	Duct	Duct	Duct	Duct	9200	7200	7200	9700	9700	43000 (11400-52000)	3650 (750-5180)	17.73	16.03	99
09+09+09+12+12	Duct	Duct	Duct	Non Duct	Non Duct	7300	7300	7300	10900	10900	43700 (11400-52400)	3680 (750-5160)	17.87	16.16	99
09+09+09+12+12	Duct	Duct	Duct	Non Duct	Duct	7200	7200	7200	11700	9700	43000 (11400-52000)	3650 (750-5180)	17.73	16.03	99
09+09+09+12+12	Duct	Duct	Duct	Duct	Duct	7100	7100	7100	9500	9500	40300 (11400-51600)	3620 (750-5200)	17.58	15.90	99