SHARP SERVICE MANUAL

CODE: 00ZARDU1//A1E

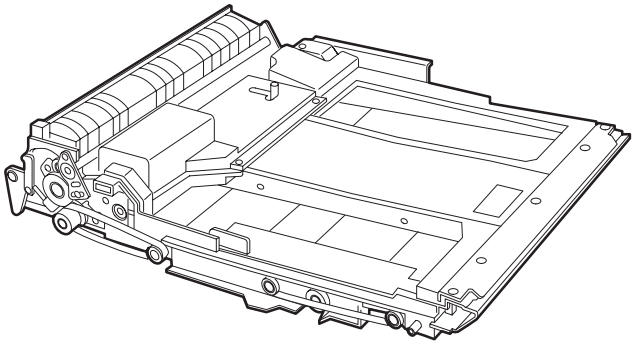

DIGITAL COPIER OPTION DUPLEX MODULE

MODEL AR-DU1

CONTENTS

Parts marked with "⚠" is important for maintaining the safety of the set. Be sure to replace these parts with specified ones for maintaining the safety and performance of the set.

SHARP CORPORATION

This document has been published to be used for after sales service only.
The contents are subject to change without notice.

[1] PRODUCT OUTLINE

The model is an option for auto duplex copiers and installed to the upper side of the paper feed port of the upper stage of the copier.

Note that the following equipment is separately required depending on the copier conditions.

(Necessary equipment for installation of the AR-DU1)

∗ 16MB Memory (ICU PWB)

∗ 2-tray paper exit unit

[2] SPECIFICATIONS

(1) Installation

Installed by	Serviceman
Installing position	Upper side of the paper feed port of the upper side of the copier

(2) Paper

Size	A3, B4, A4, A4R, B5, B5R, A5 (11" × 17"/8.5" × 14"/11" × 8.5"/ 11" × 8.5R/8.5" × 5.5"/8.5" × 13"/ 7.25" × 10.5")
Paper weight	56 ~ 105g/∗ (Similar to the copier paper feed section)

(3) Power

Power source	Supplied from the copier (DC +5V, +24V)

(4) Power consumption

Max. power consumption	About 25W
Standby	About 0.2W

(5) External view

External dimensions	515(W) × 400 (D) × 120(H) mm (Stored inside the copier)
Weight	About 5kg

[3] UNPACKING AND INSTALLATION

1. Unpacking

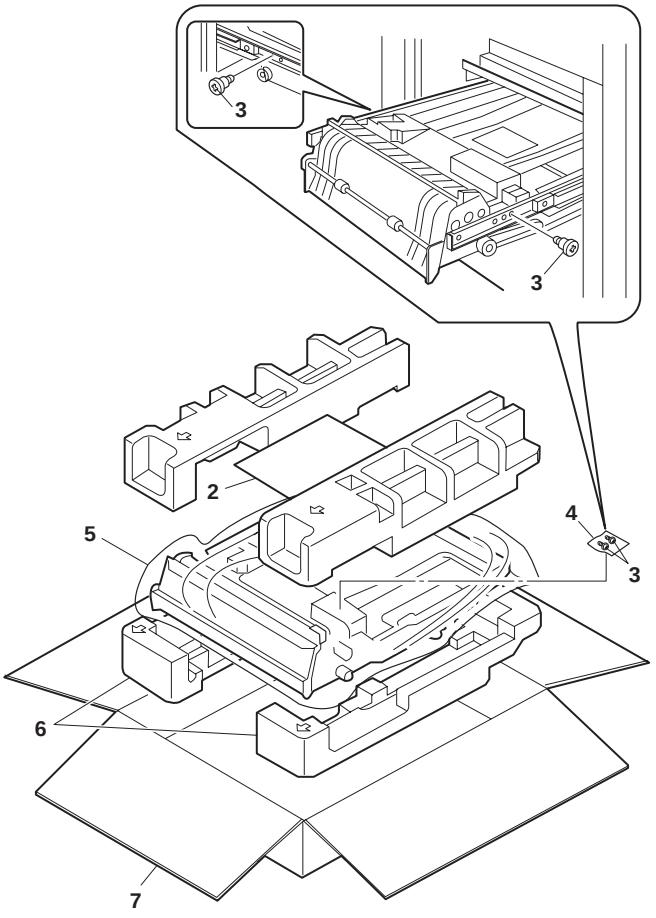

2. Installation

Disconnect the power plug of the copier and follow the following procedures.

1. Remove the paper exit unit.

Remove the paper exit unit from the copier.

Remove the stopper screws (2 pcs.) from the round hole of the rail.

- When installing the paper exit unit again, the stopper screw is not required.

Then, remove the four fixing screws which are fixing the paper exit unit to the copier rail, and remove the paper exit rail.

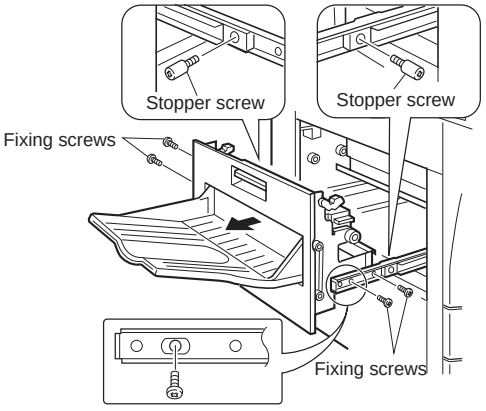

2. Install the ADU unit.

Push the rails which are attached to the front and rear sides of the copier into the copier.

Insert the ADu unit under the rail of the copier side (F, R sides).

At that time, insert the rear hook of the ADU unit just in front of the rear side rail on the copier side.

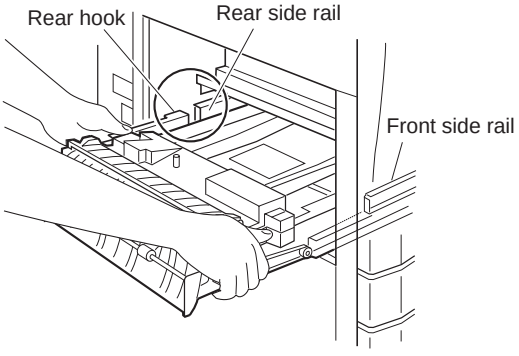

Slightly lift up the ADU unit and pass the rear side rail to the rear hook, and pull out the rail until it stops.

Then pull out the front side rail until it stops and put the ADU unit on the front side rail.

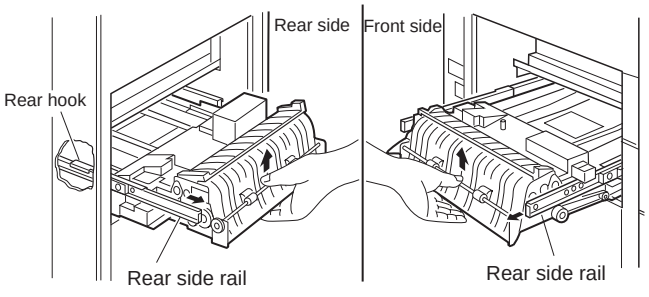

Pull out the ADU unit inch by inch, and fit the ADU unit installing hole on the front side with the screw hole of the rail, and fix with a fixing screw.

Then, pull out the ADU unit and the rear side rail until it stops, and fix the rear side rail to the ADU unit installing hole on the rear side with the remaining fixing screw.

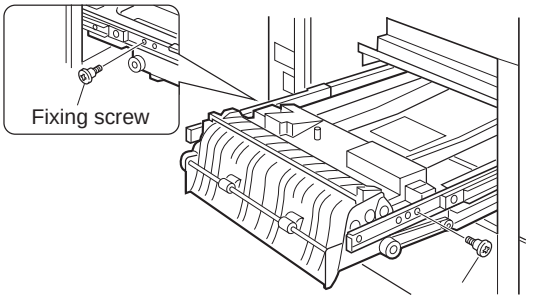

3. Install the paper exit unit.

★ Installation from the 1-tray paper exit unit

Install the new 2-tray paper exit unit to the position of the paper exit unit which was removed in procedure 1. Fix with the fixing screws (4 pcs.).

★ Installation from the 2-tray paper exit unit

Install the paper feed unit to the original position, and fix with the fixing screws (4 pcs.).

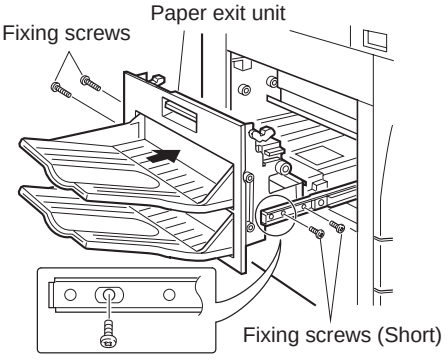

4. Remove the ADU unit harness cover and connect the connector.

Remove the fixing screw of the ADU unit, and remove the harness cover.

Remove the connector of the connector storing section, and connect it to the ADU unit connector.

Attach the pawl section of the removed harness cover to the ADU unit and fix with a fixing screw.

At that time, treat the wires so that the connector is stored inside the harness cover. Be careful not to pinch the wire with the harness cover.

Insert the paper exit unit into the copier.

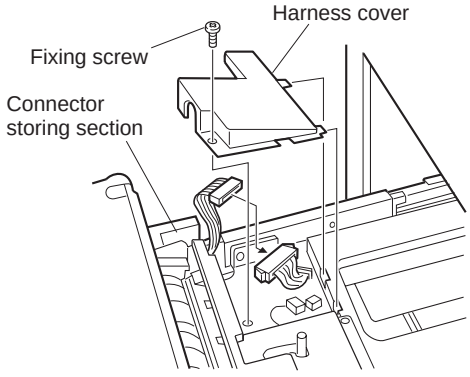

Connect the power plug of the copier to the power outlet, turn on the power switch, and follow the following procedures.

5. Change the system configuration setting.

① Perform the mode setting with the key operation of the copier.

P → ⏎ → C → ⏎ → 2 → 6 → ◇ → 0 → 1 → ◇

The current set value is displayed with the above key operation.

② Change the set value to 2.

C → 2 → OK With the above operation, the set value can be changed.

The set value can be changed with the key operation.

6. Check and adjust the alignment guide.

① Set the adjustment mode of the alignment guide with the key operation of the copier.

P → ⏎ → C → ⏎ → 5 → 2 → ◇ → 0 → 1 → ◇

With the above key operation, the set value is displayed. A sheet of paper is fed from the paper feed section, and transported to the top of the alignment plate of the ADU unit and stopped under the aligned state.

② Pull out the paper exit unit.

③ Check that the clearance between the alignment guide and the paper is 0 ~ 0.5mm.

At that time, be sure to shift the paper to the rear side of the alignment guide for checking.

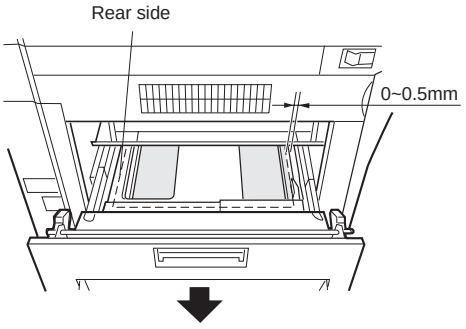

When the alignment guide is not shifted:

remove the paper from the ADU unit, press the CA key and cancel the set mode.

When the alignment guide is shifted:

① Insert the paper exit unit.

② Change the set value.

○ → ○ → [EXECUTE] By this operation, the set value is changed and alignment is performed again.

Set value

<Example>

- Setting to 45

4 → 5 → [EXECUTE]

When the set value is changed by 1, the alignment guide width is changed by 0.5 ~ 0.6mm.

★ Reference for changing the set value

40 ← (Shipment set value) → 60

The guide is extended The guide is narrowed

(The value of 61 or greater or 39 or smaller is invalid.)

③ Pull out the paper exit unit again.

④ Check that the clearance between the alignment guide and paper is 0 ~ 0.5mm.

At that time, be sure to shift the paper to the rear side of the alignment guide for checking.

Repeat procedures ① through ④ repeatedly.

After adjustment, remove the paper from the ADU unit, press the CA key and cancel the set mode.

7. Print off-center adjustment

① Make a copy. If the center is shifted, set the adjustment mode of the print off-center with the key operations of the copier.

P → ⏎ → C → ⏎ → 5 → 0 → ◇ → 1 → 0 → ◇

With the above key operation, the current set value is displayed.

② Select the item of ADU from the message menu with [↑] key and [↓] key.

Adjustment value: 1.7mm

③ Change the set value.

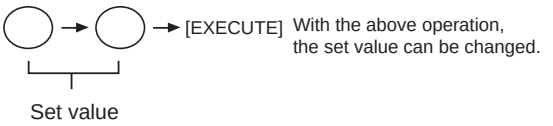

<Example>

- When setting to one-digit value (5)

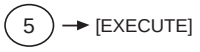

- When setting to two-digit value (15)

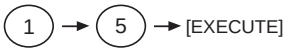

When the value is changed by 1, the center position is shifted by about 0.12mm.

★ Reference of set value change

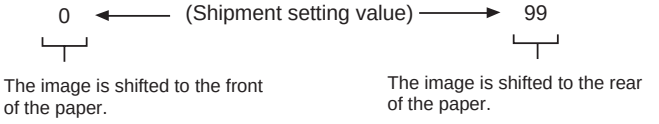

④ After adjustment, make a copy to check the center is not shifted.

If the center is shifted, repeat procedures ③ and ④ and check again.

⑤ After adjustment, press the CA key to cancel the setting mode.

[4] EXTERNAL VIEW AND INTERNAL STRUCTURE

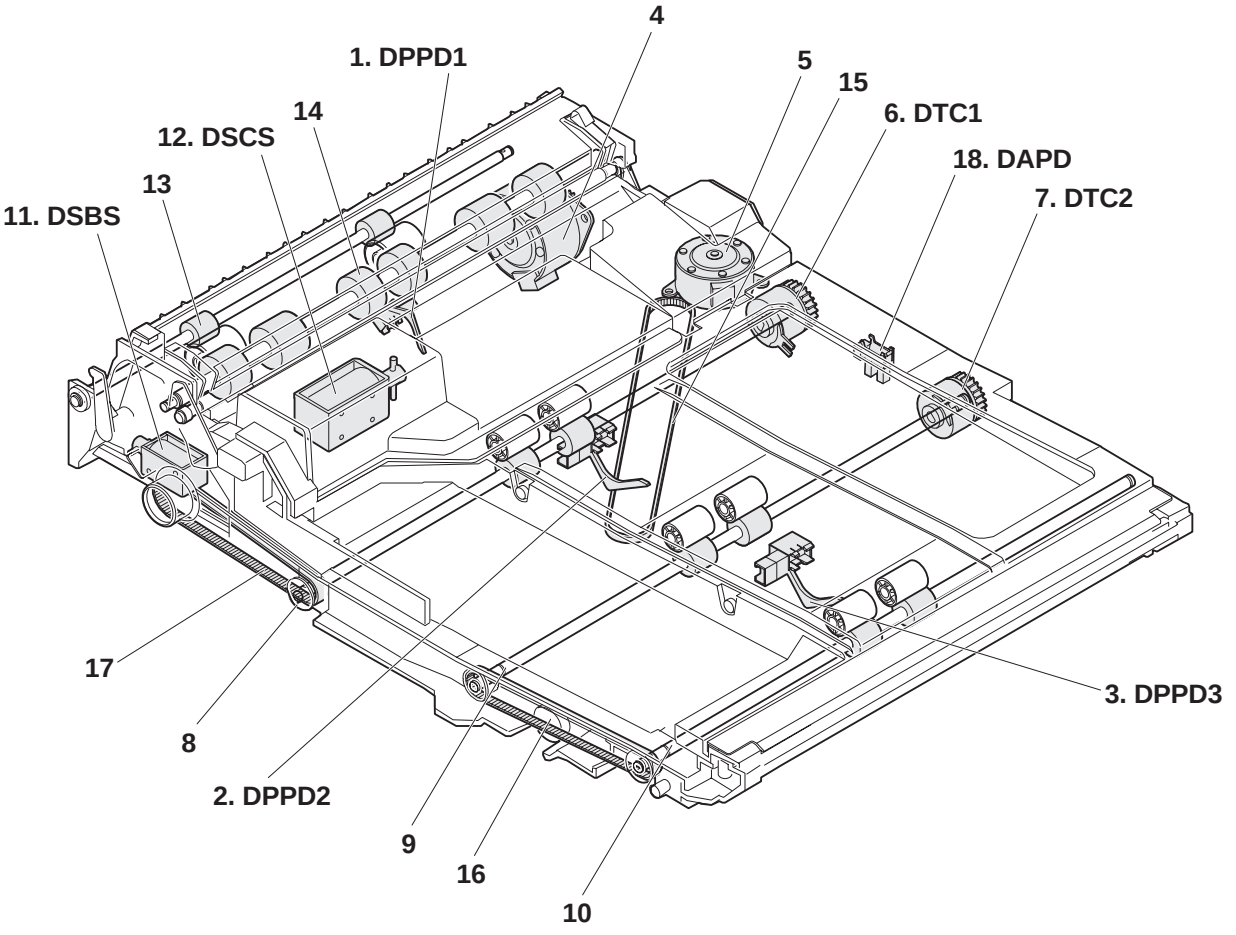

No.	Code	Name	Type	Function and operation
1	DPPD1	Paper in detector 1	Photo transmission	ADU tray paper in detection
2	DPPD2	Paper in detector 2	Photo transmission	ADU tray paper in detection
3	DPPD3	Paper in detector 3	Photo transmission	ADU tray paper in detection
4	—	Reverse motor	Pulse motor	Paper reversion and transport drive
5	—	Alignment motor	Pulse motor	Paper alignment plate drive
6	DTC1	Transport clutch 1	Electromagnetic clutch	
7	DTC2	Transport clutch 2	Electromagnetic clutch	
8	—	Transport roller 1	—	ADU tray paper transport
9	—	Transport roller 2	—	ADU tray paper transport
10	—	Transport roller 3	—	ADU tray paper transport
11	DSBS	Paper exit/reverse gate solenoid	Solenoid	Selection of paper exit to the lower stage of the 2-tray paper exit unit and the reverse route
12	DSCS	Contact/detach solenoid	Solenoid	Selection of paper storing and transport in ADU tray
13	—	Reverse roller	—	Selection of paper retaining and transport in paper reversion
14	—	Transport roller	—	Paper transport
15	—	Alignment belt	—	Paper transport
16	—	Transport belt	—	Transport roller drive
17	—	Belt B	—	Transport roller drive
18	DAPD	Alignment plate home position detector	Photo transmission	Alignment plate home position detection

[5] OPERATIONAL DESCRIPTIONS

1. Basic operation

This unit is stored under the transport base of the copier. In the duplex copy mode, the paper discharged from the fusing section after single copy is reversed by the switchback operation made by combination of the solenoid in the 2-stage paper exit tray unit, the solenoid and the reverse roller in the duplex module (hereinafter referred to as ADU).

Then the paper is aligned by the ADU and transported to the copier for duplex copy.

2. Details of operation

There are following three kinds of operations depending on the number and the size of papers.

A. Operation of one sheet of paper

B. Paper size A4 (11" × 8.5") Portrait or less, two or more copies

C. Paper size B5R Landscape or above, two or more copies

A. Operation for one sheet of paper

1) Reverse operation (Solenoid A = ON, solenoid B = ON.)

Paper is transported down and held there by normal rotation of the reverse roller C.

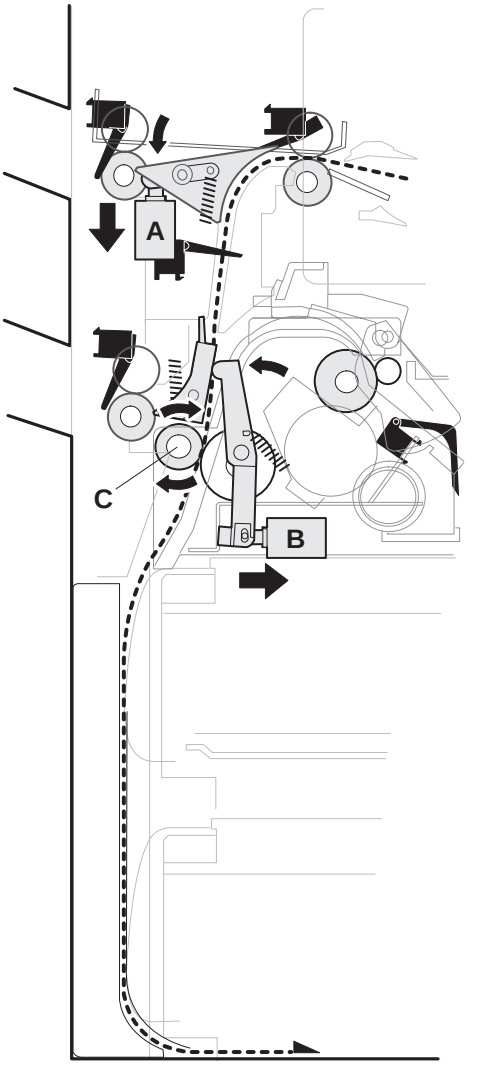

2) Paper exit to ADU (Solenoids A and B = OFF)

Reversion of the reverse roller C feeds the document to the ADU.

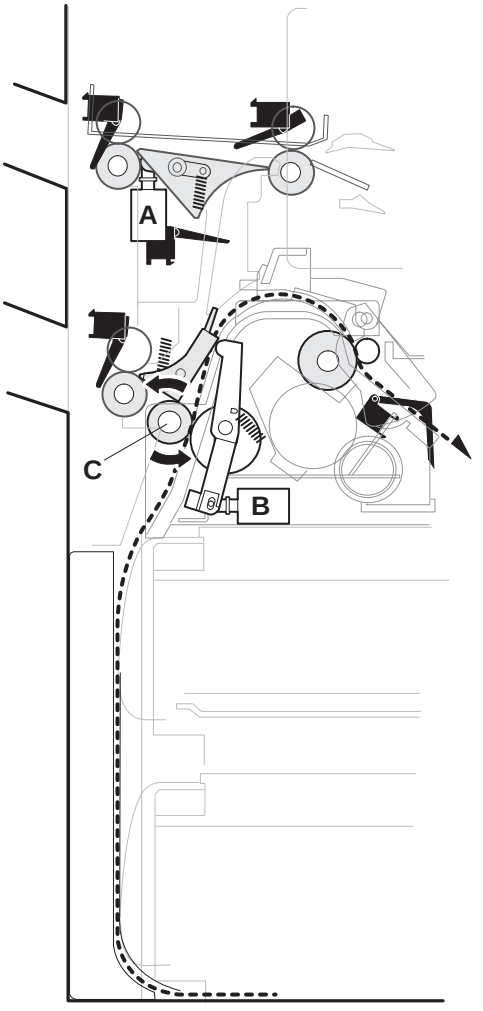

3) Alignment operation (Alignment motor operation)

The paper fed to the ADU is aligned to the center position by the alignment motor.

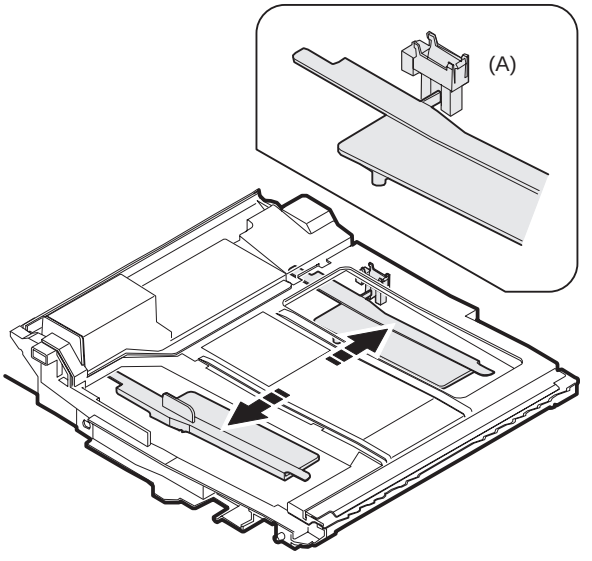

4) Transport operation (Solenoid D = ON, reverse motor C normal rotation, Transport belt rotation by turning on the clutch)

The paper in the ADU is transported to the copier transport section by pressing the upper and lower transport rollers by solenoid D.

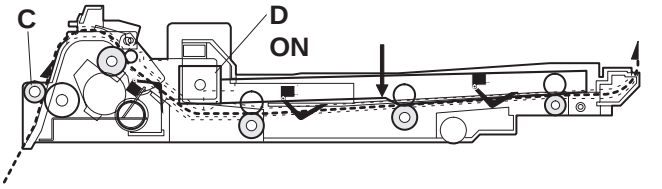

B. Paper size A4 (11" × 8.5") or less

(Example: Duplex copy of 12 sheets of single surface document)

The basic operation is same as section A. The transport timing is different.

(A) indicates the copier transport section.

(B) indicates the duplex unit.

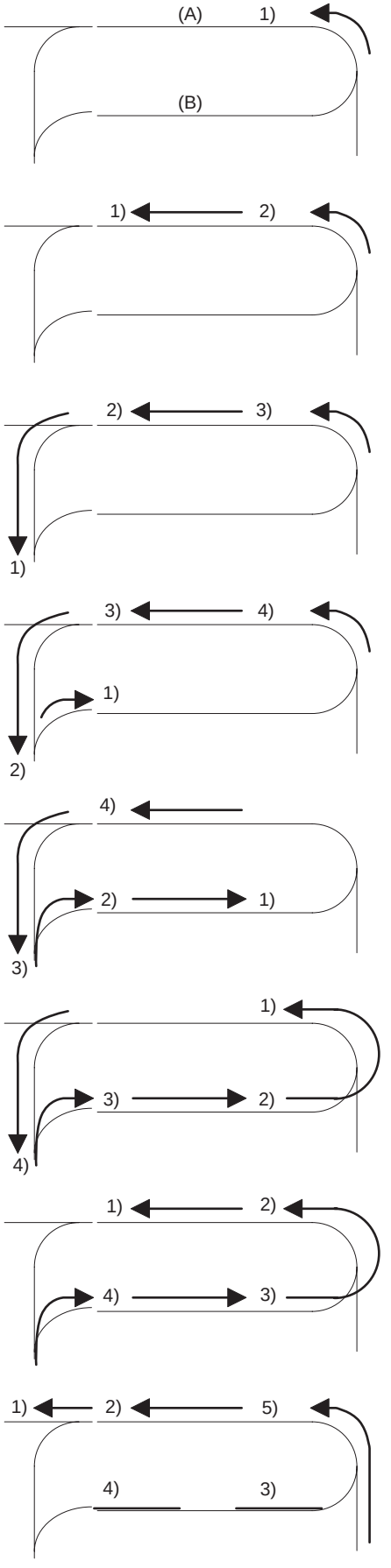

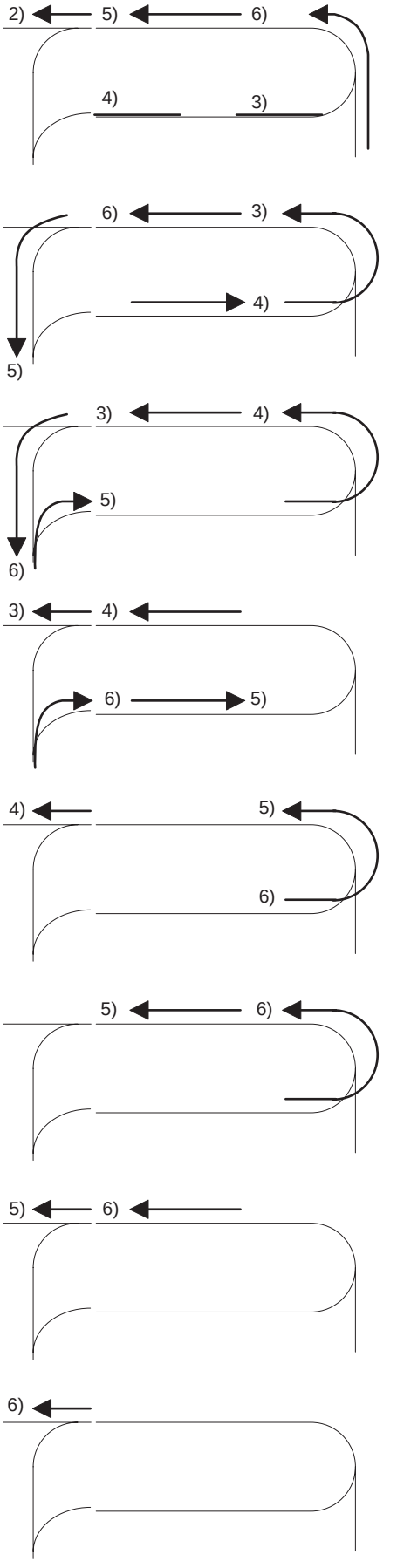

C. Paper size B5R or less, Landscape

The basic operation is same as section A. The transport timing is different.

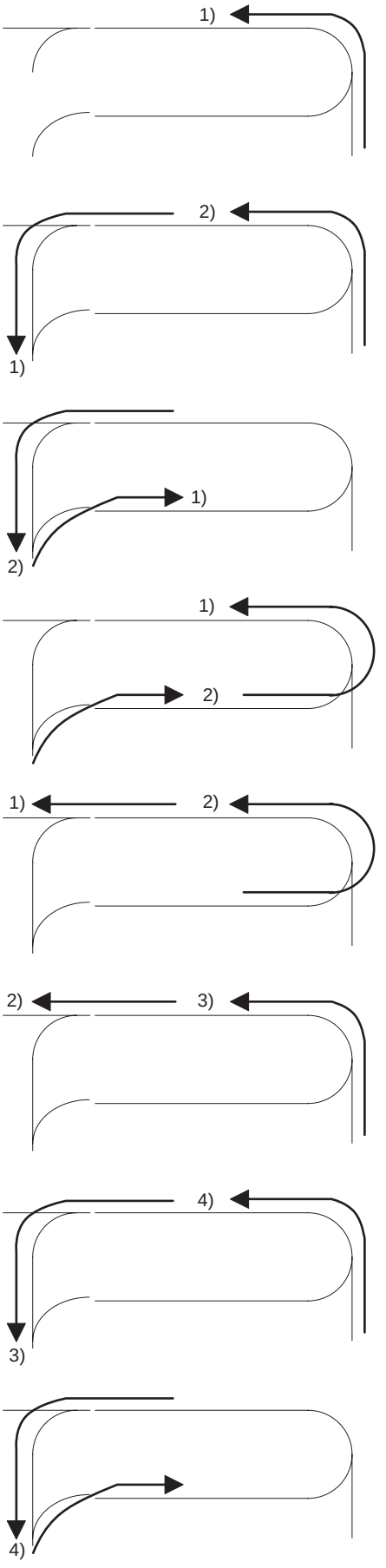

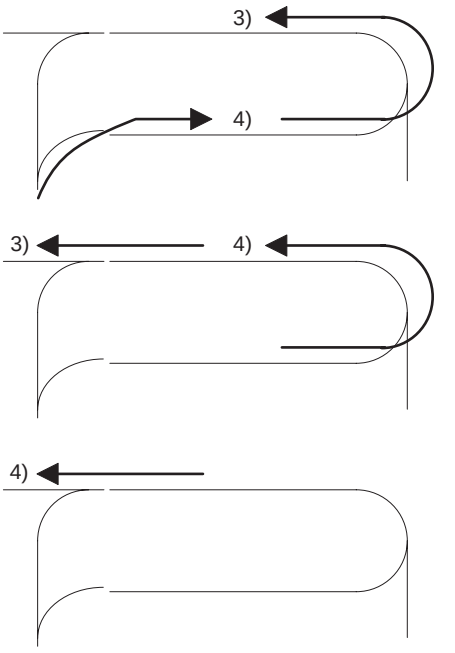

[6] DISASSEMBLY, ASSEMBLY

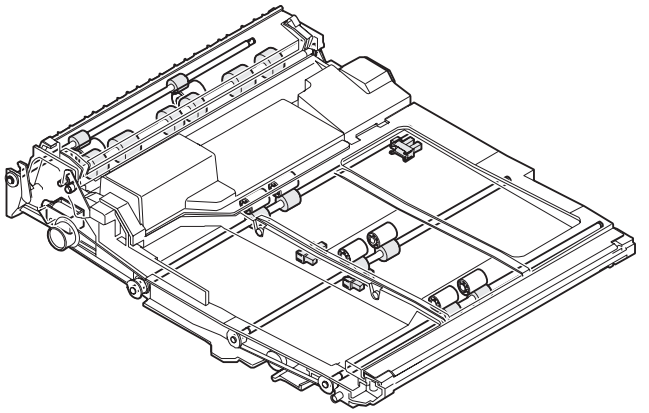

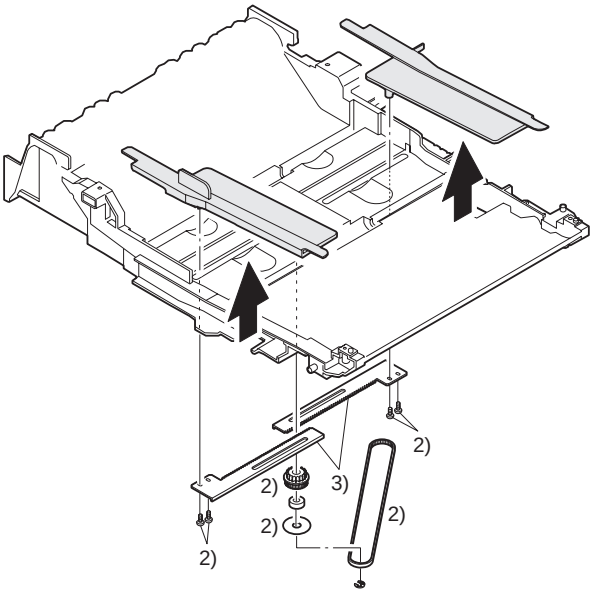

1. Upper transfer section

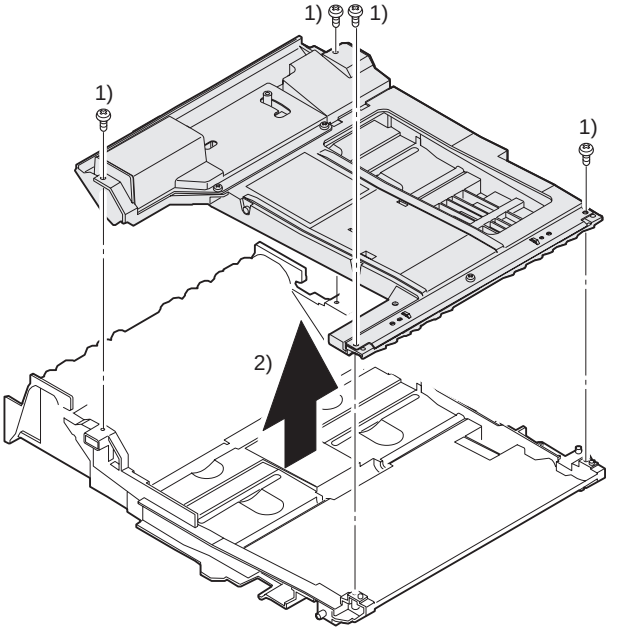

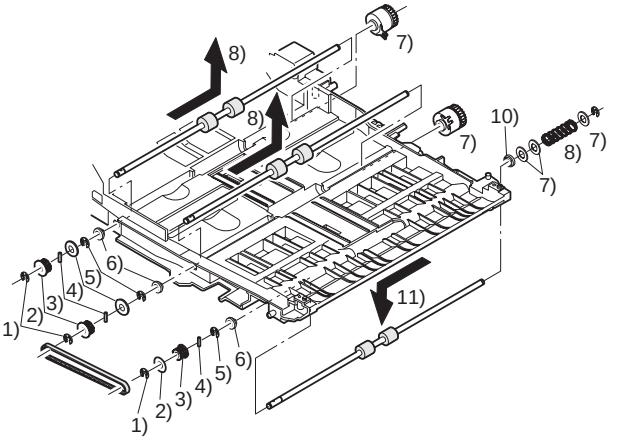

2. Transfer roller

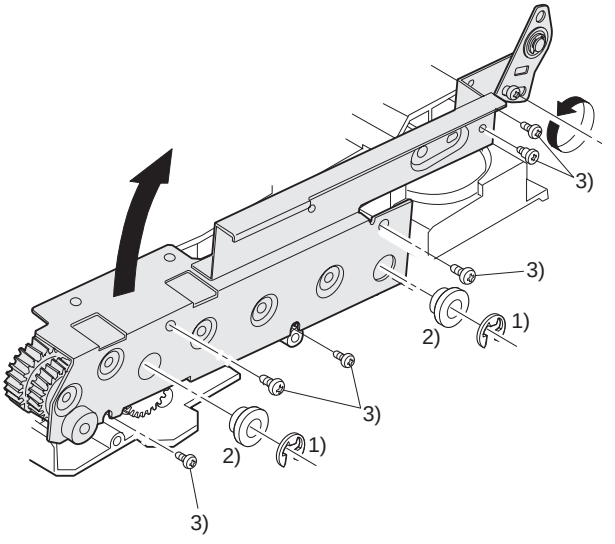

3. Reverse, transfer roller

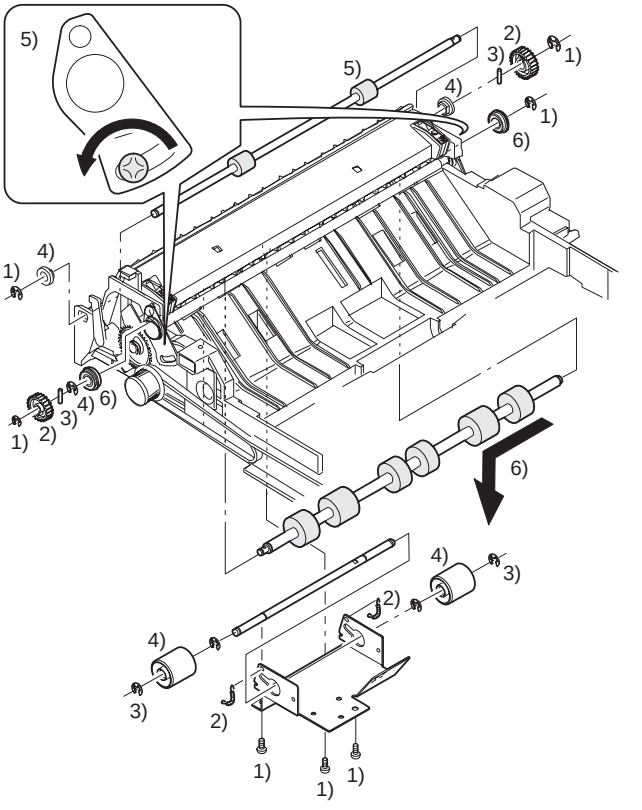

[7] ADJUSTMENTS

1. Adjustment item list

Item	Adjustment procedure
A. Alignment guide check and adjustment	SIM52-01
B. Print off-center adjustment	SIM50-10
C. Curl correction roller pressure adjustment	

2. Adjustments

A. Alignment guide check and adjustment

1) Set the alignment guide adjustment mode with the key operation of the copier.

P → ⊟ → C → ⊟ → 5 → 2 → ◇ → 0 → 1 → ◇

With the above key operation, the set value is displayed. When the EXECUTE key is pressed, a paper is fed from the selected paper feed section and transported to the top of the alignment plate and stopped under aligned state.

2) Pull out the paper exit unit.
3) Check that the clearance between the alignment guide and the paper is 0 ~ 0.5mm.

At that time, shift the paper to the rear side of the alignment guide for checking.

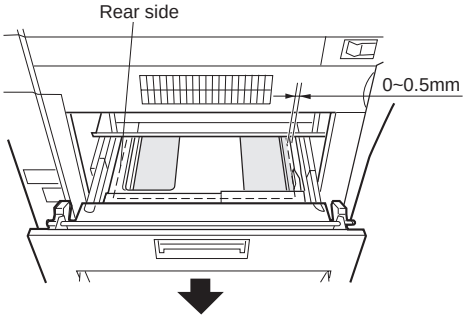

When the alignment guide is not shifted:

Remove the paper from the ADU unit and press the CA key to cancel the setting mode.

Then go to the next procedure (Print off-center adjustment).

When the alignment guide is shifted:

1) Insert the paper exit unit.
2) Change the set value.

( ) → ( ) → [EXECUTE] By this operation, the set value is changed and alignment is performed again.

Set value

<Example>

- When setting to 45

4 → 5 → [EXECUTE]

When the set value is changed by 1, the alignment guide width is changed by 0.5 ~ 0.6mm.

★ Reference of setting value change

40 ← (Shipment set value) → 60

The guide is extended — The guide is narrowed

(The value of 61 or greater or 39 or smaller is invalid.)

3) Pull out the paper exit unit again.
4) Check that the clearance between the alignment guide and the paper is 0 ~ 0.5mm.

At that time, be sure to shift the paper to the rear side of the alignment guide. Repeat procedures 1) through 4) repeatedly for checking.

After adjustment, remove the paper from the ADU unit, press the CA key and cancel the setting mode.

B. Print off-center adjustment

1) Make a copy. If the center is shifted, set to the adjustment mode of the print off-center with the key operations of the copier.

P → ⊟ → C → ⊟ → 5 → 0 → ◇ → 1 → 0 → ◇

Adjustment value: 1.7mm

With the above key operation, the currently set value is displayed.

2) Select "ADU" item from the message menu with [↑] key and [↓] key.
3) Change the set value.

( ) → ( ) → [EXECUTE] With the above operation, the set value can be changed.

Set value

<Example>

- Setting of one-digit value

5 → [EXECUTE]

- Setting of two-digit value

1 → 5 → [EXECUTE]

When the set value is changed by 1, the print center is shifted by about 0.125mm.

★ Reference of changing the setting value

0 ← (Shipment setting value) → 99

The image is shifted to the front of the paper. — The image is shifted to the rear of the paper.

4) After adjustment, make a copy again and check that the center is not shifted.

If the center is still shifted, perform procedures 3) and 4) repeatedly for checking.

5) After completion of adjustment, press the CA key to cancel the setting mode.

C. Curl correction roller pressure adjustment

The curl correction roller pressure is adjusted by changing the pressure adjustment plate position on the front and the rear frame sides.

The standard adjustment position is as shown below.

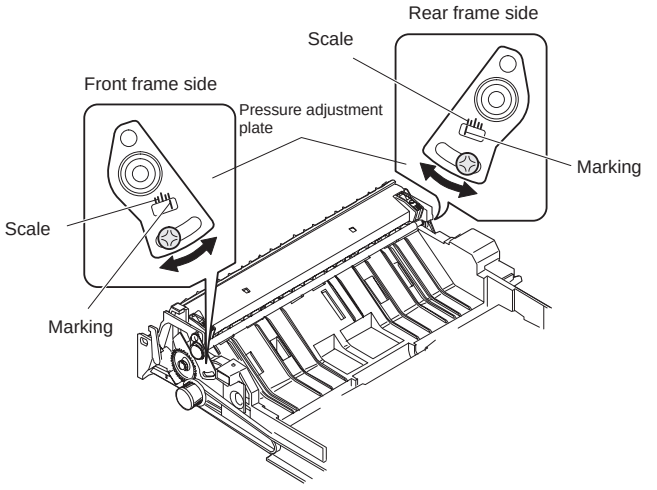

(Front frame side)

Move the pressure adjustment plate in the arrow direction for the marking on the duplex frame, and fix to the right end of the scale. When the pressure adjustment plate is moved to the left of the scale, the pressure is decreased.

(Rear frame side)

Move the pressure adjustment plate in the arrow direction for the marking on the duplex frame, and fix to the left end of the scale. When the pressure adjustment plate is moved to the right of the scale, the pressure is decreased.

When paper curl correction is insufficient or exceeded in the duplex mode resulting in a paper jam, change the attachment position of the pressure adjustment plate from the standard position to change the curl correction roller pressure.

An adjustment is required for some kinds of paper.

[8] MAINTENANCE

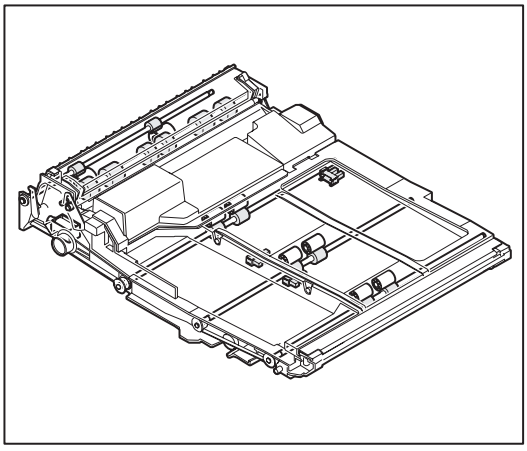

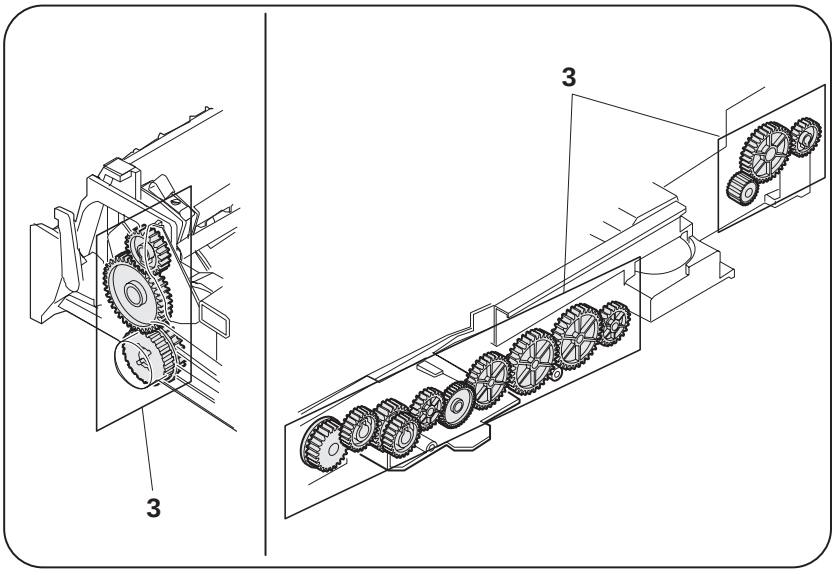

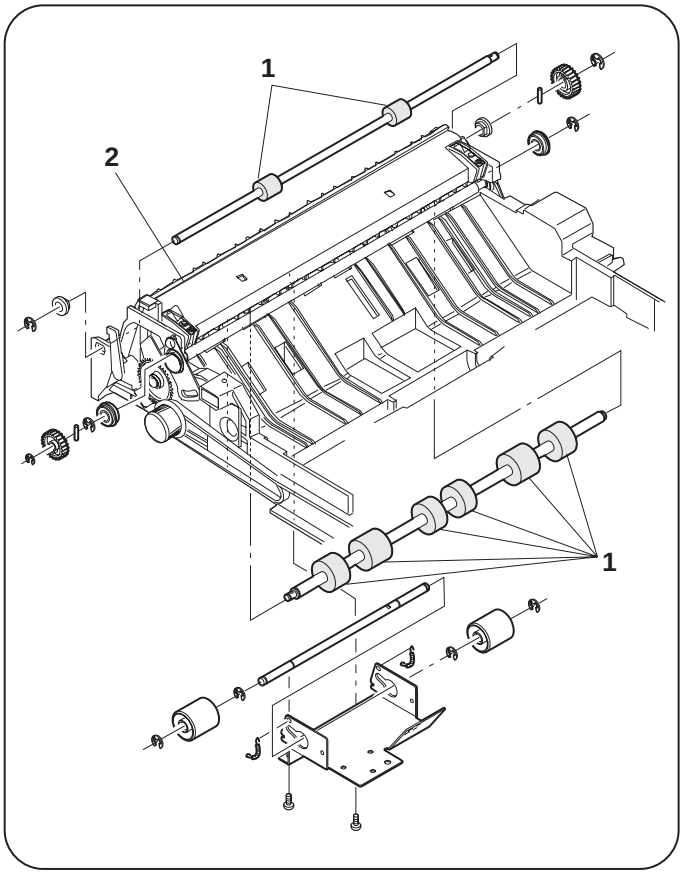

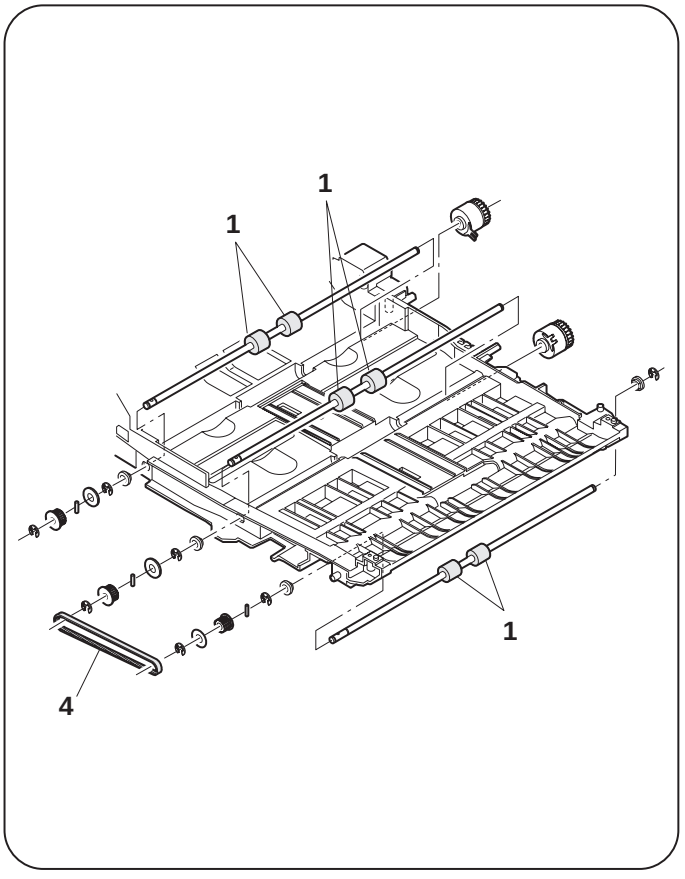

No.	Name	Work item	Condition of execution		Remark
			Timing of execution	Cycle	
1	Transport rollers	Cleaning	Maintenance service	80K	
2	Transport paper guides	Cleaning	Maintenance service	80K	
3	Gears	Lubrication	Maintenance service	80K	
4	Belts	Check	Maintenance	240K	

SHARP

SHARP CORPORATION
Printing & Reprographic Systems Group
Quality & Reliability Control Center
Yamatokoriyama, Nara 639-1186, Japan
1998 May Printed in Japan Ⓢ