Contents

Intentionally Blank Page

Glossary of Terms

To better understand the information presented in this section you should better familiarize yourself with these terms.

Brunswick Monitor - A monitor that is used to display the scoresheet video. The overhead monitors can also display VCR video if desired. This monitor is sometimes referred to as the Brunswick monitor.

Deflection Coil - An electrical coil which directs the electrons generated inside a CRT to a particular location on the screen.

Global Video - The VCR video from the Audio/video Unit located at the control desk. It is called global video because it routed to and can be displayed on any overhead monitor.

LLAN (Local Local Area Network) - A term used to describe the communication used by a Scorer Computer to communicate to circuits boards. It is referred to as a local LAN because it is exclusive to a lane pair.

Pincushion - A distortion of the CRT screen that causes the sides or top and bottom of picture to bend toward the center of the screen.

RGBS (Red, Green, Blue, Sync) - A format of video describing the way in which the video is sent over the cable.

TV Only Monitor - A monitor that is used to display only the VCR video. This monitor cannot display bowler's scoresheet.

TV Only PCB - A circuit board located inside the TV-Only monitor that adapts the TV/VCR video so that the Video Processor can use it. This PCB also determines when to turn the monitor on or off.

Video Interface PCB - A circuit board located inside regular monitors that selects the incoming scoresheet or TV video and adapts it so that the Video Processor PCB can use it. The PCB also determines when to turn the monitor on or off.

Video Processor PCB - A circuit board located in the back of the monitor that adapts the video so it can be displayed properly on the CRT. The Video Processor controls the coils attached to the CRT and sends the video to the Video Output PCB so it can be shown on the picture tube. Also referred to as the Brunswick PCB.

Video Output PCB - A circuit board located in the back of the monitor and attached to the back of the picture tube. This PCB is responsible for applying the video to the color guns located inside the picture tube.

Overview

The Brunswick monitors are single lane units that can be arranged individually, in pairs, or as a triple configuration that includes a TV Only monitor. Refer to the figure titled *Brunswick Overhead Configurations.*

(1) TV ONLY

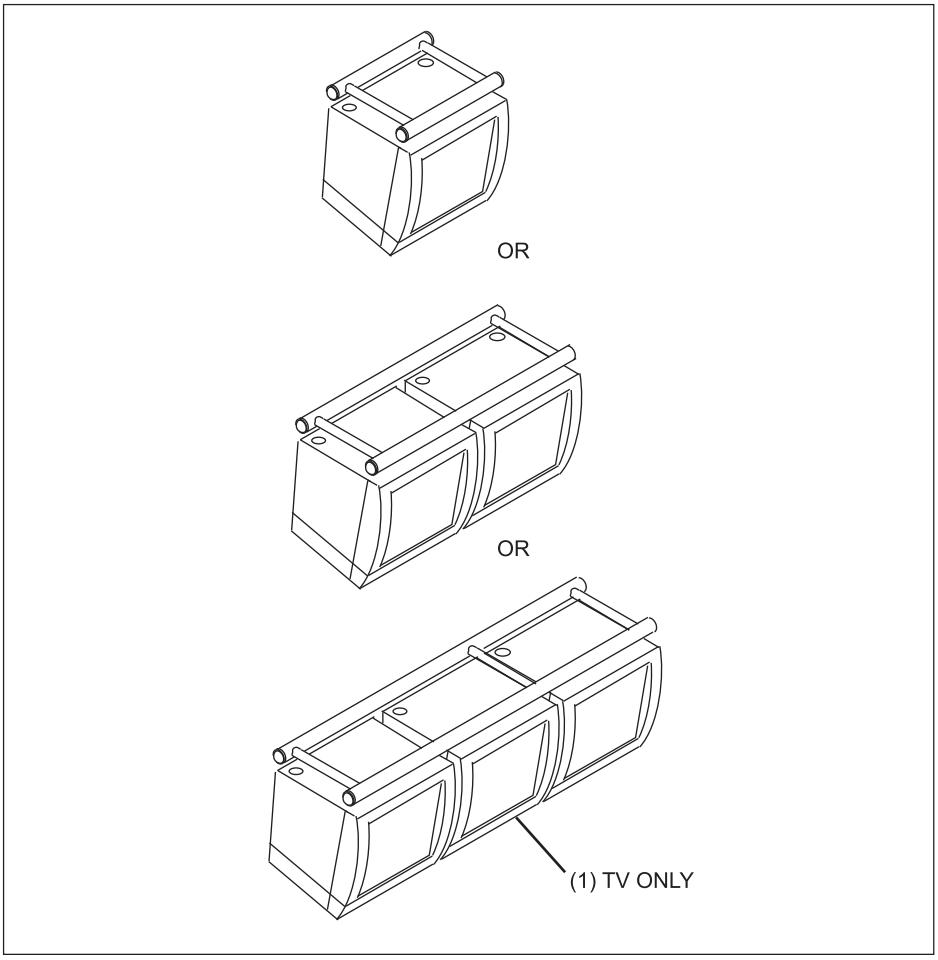

Brunswick Overhead Configurations

Two types of monitors are available: a regular monitor that is capable of showing both a scoresheet and a VCR/TV picture and a TV Only monitor that can display only the VCR/TV picture. When working on the overheads it is important to identify the type of monitor because each contains a unique circuit board and is wired differently. An easy way to determine the type of overhead is to look at the connections at the top of the unit. The regular monitor will have 3 video connectors while the TV Only monitor will have a total of 4 connectors. Refer to the figure titled *Top View Comparison of the Regular Monitor and the TV Only Monitor.*

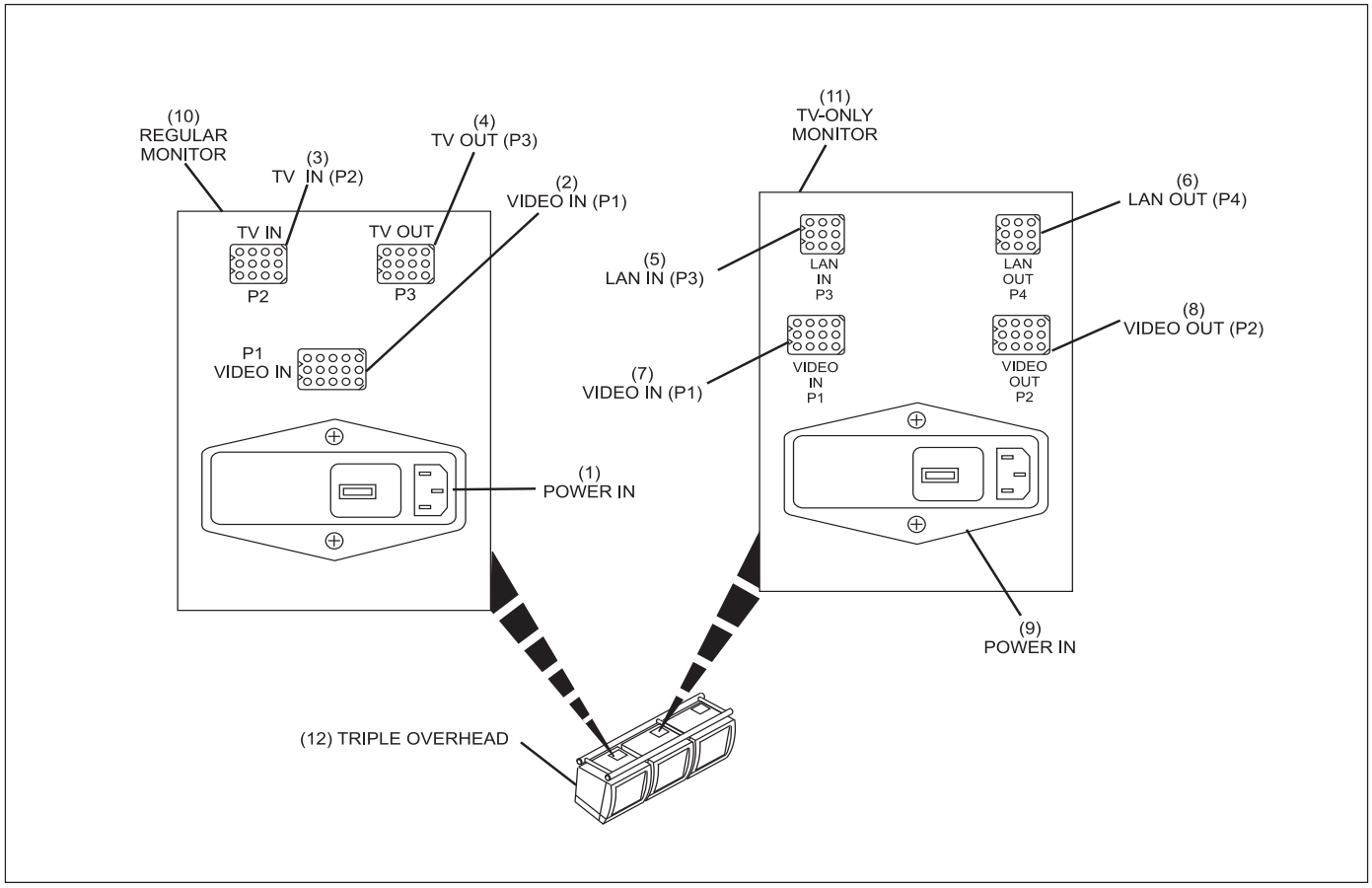

Top View Comparison of the Regular Monitor and the TV Only Monitor

(1)	POWER IN	(2)	VIDEO IN (P1)	(3)	TV IN (P2)
(4)	TV OUT (P3)	(5)	LOCAL AREA NETWORK OUT (P3)	(6)	LOCAL AREA NETWORK OUT (P4)
(7)	VIDEO IN (P1)	(8)	VIDEO OUT (P2)	(9)	POWER IN
(10)	REGULAR MONITOR	(11)	TV ONLY MONITOR	(12)	TRIPLE OVERHEAD

Overhead Monitor Connector Functions

Regular Monitor

- **Power In -** Receptacle for the main power to the overhead. The input here can be 120VAC or 240VAC. This is selected through a voltage selection and fuse assembly built into the receptacle. Refer to *Selecting the Input Voltage* later in this section.

- **Video In (P1) -** Input connection for the scorersheet video coming from the scorer computer.

- **TV In (P2) -** Input connection for the global video signal originating at the Control Desk A/V box. This cable daisy chains to all regular and TV Only monitors. Refer to *Video Out (P3)*.

- **TV Out (P3) -** Output for the global video continuing to the next monitor. Refer to *Video In (P2)*. If the video does not continue to another monitor, a termination plug is installed on the connector.

TV Only Monitor

- **LAN In (P3) -** Input for the LLAN originating at Com1 output of the scorer. The LLAN cable is routed through a RS-232 converter box it is sent to the TV Only monitors. Through this cable, the user can control the on/off operation of the monitor.

- **LAN Out (P4) -** Output for the Local LAN. This connection connects to the next TV-Only monitor that is controlled by the Scorer Computer.

- **Video In (P1) -** Input connector for the global video cable originating at the Control Desk A/V box. This cable daisy chains to all monitors. Refer to *Video Out (P2)*.

- **Video Out (P2) -** Output for the global video continuing to the next monitor. Refer to *Video In (P1)*. If the video does not continue to another monitor, a termination plug is installed on the connector.

- **Power In -** Receptacle for the main power to the overhead. The input here can be 120VAC or 240VAC. This is selected through a voltage selection and fuse assembly built into the receptacle. Refer to *Selecting the Input Voltage* later in this section.

Cabinet Access

Tools Required: 5/32" Allen head wrench or Phillips head screwdriver.

The circuit boards inside of the overhead can be accessed through a door panels located at the back of the cabinet. The method of opening the panel depends on the style of door. To open doors with Allen latches, turn the 5/32" Allen bolt counterclockwise until the latch unlocks. To open doors equipped with screws, remove the two Phillips head screws located at the top corners of the door. Refer to the figure titled *Removal of the Circuit Board Access Panels*.

(1) REAR ACCESS

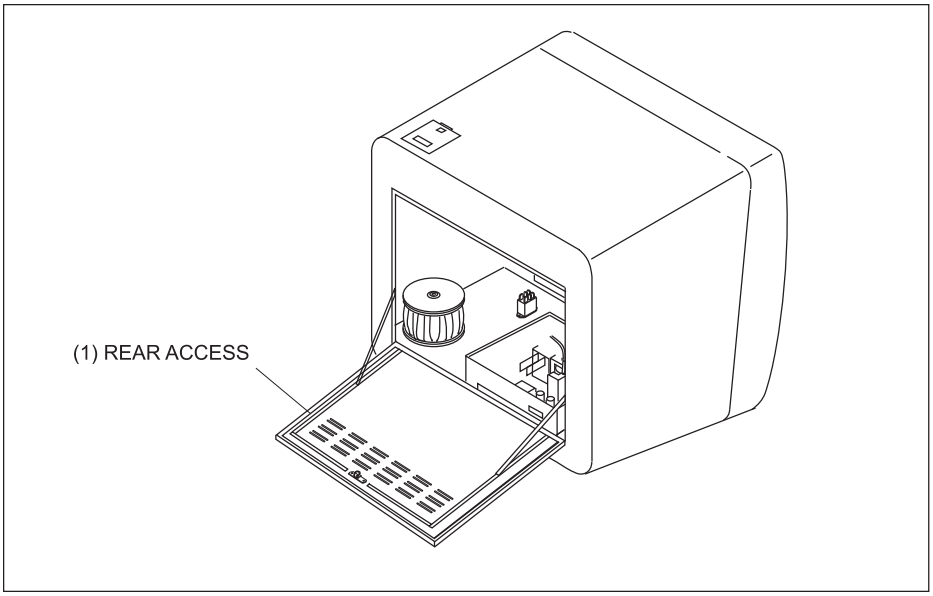

Removal of the Circuit Board Access Panels

Overhead Replacement

NOTE:

Replacement of the picture tube inside the chassis may require the use of special tools and adjustment procedures. Because of this, it is suggested that tube replacement be performed by a qualified service technician. If returning the unit for replacement, remove the monitor chassis from its cabinet. Do NOT return the cabinet or face plate.

Lowering the Monitor

NOTE:

When lowering the monitor it is suggested that the monitors be lowered onto a carpeted dolly to avoid scratching the monitor cabinet and to aid in the transport of the unit.

Tools Needed:

- Winch with Crank Handle
- Phillips Head Screwdriver

Suggested Tools:

- 3/8" Variable Speed, Heavy Duty Drill for use with adapter attachment
- Extension Cord for drill

Should it become necessary to replace a complete overhead unit, or if you need to lower a monitor, perform the following steps:

1. Disconnect the following cables from the overhead:

a.	AC power cable	(All monitor types)
b.	Video In (P1)	(All monitor types)
c.	TV In (P2)	(Regular monitor)
d.	TV Out (P2)	(Regular monitor)
e.	Video Out (P2)	(TV Only monitor)
f.	LLAN In (P3)	(TV Only monitor)
g.	LLAN Out (P4)	(TV Only monitor)

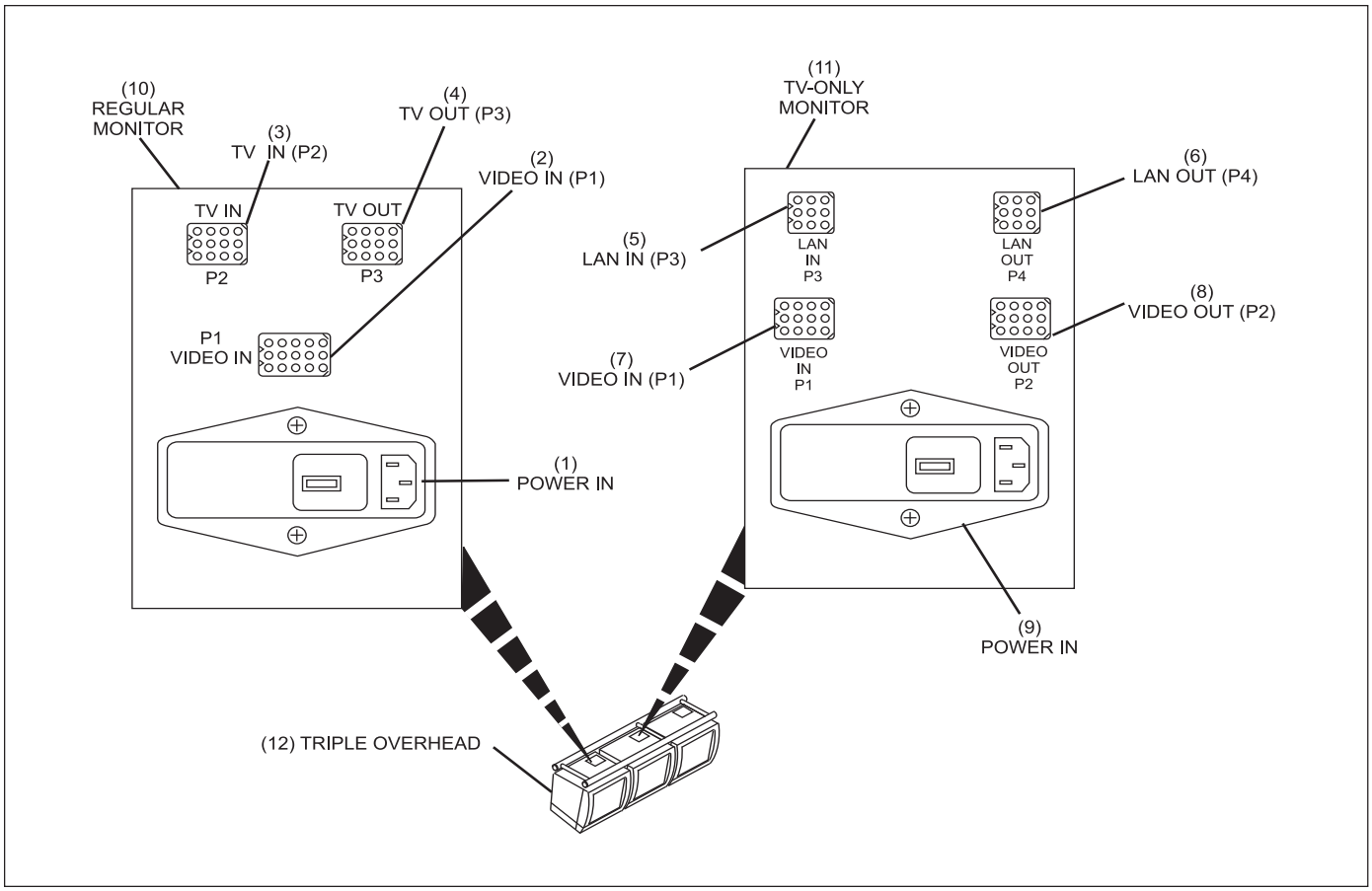

Overheads - Top View

(1)	POWER IN	(2)	VIDEO IN (P1)	(3)	TV IN (P2)
(4)	TV OUT (P3)	(5)	LOCAL AREA NETWORK OUT (P3)	(6)	LOCAL AREA NETWORK OUT (P4)
(7)	VIDEO IN (P1)	(8)	VIDEO OUT (P2)	(9)	POWER IN
(10)	REGULAR MONITOR	(11)	TV ONLY MONITOR	(12)	TRIPLE OVERHEAD

2. Place the winch assembly on top of the overhead support weldment and center it over the monitor to be removed.

CAUTION!

Make sure that the winch is positioned so that the lowering mechanism is at the front of the overhead and it is positioned in the notches located on the flat cross brace.

3. Attach the winch strap to the U-bolt located at the top of the monitor. Refer to the figure titled *Attachment of the Winch Assembly to the Weldment and Monitor*.

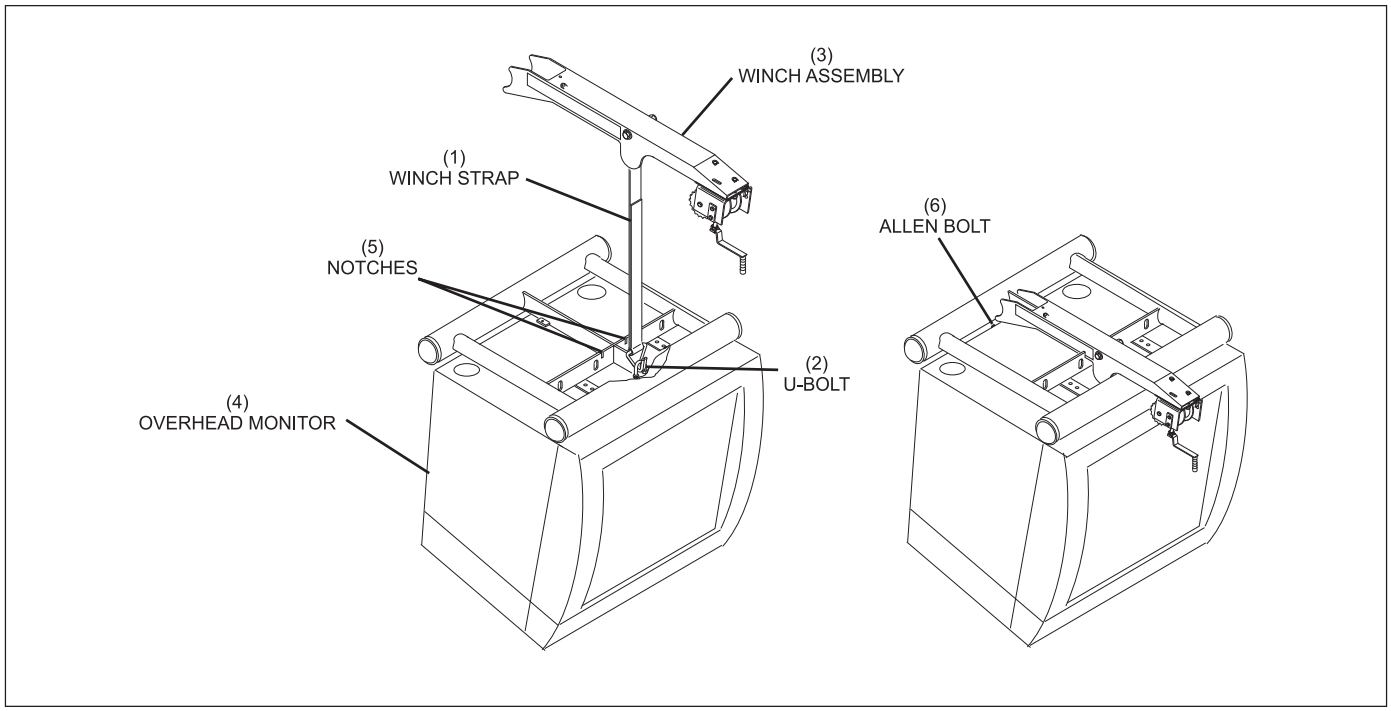

Attachment of the Winch Assembly to the Weldment and Monitor

(1) WINCH STRAP
(2) U-BOLT
(3) WINCH ASSEMBLY
(4) OVERHEAD MONITOR
(5) NOTCHES
(6) ALLEN BOLT

4. Remove the hardware holding the back of the monitor to the support weldment.

5. Place the crank handle or drill adapter on the winch and *raise* the overhead by turning the crank counterclockwise until the weight of the monitor is off of the support. Disconnect the J-bolts from the weldment.

6. Turn the crank clockwise to lower the monitor.

NOTE:

Using a variable speed drill with the supplied attachment to lower the monitor will speed up the process.

7. Remove the winch strap from the monitor.

Raising the Monitor

Tools Needed:

- Winch with Crank Handle
- Phillips Head Screwdriver

Suggested Tools:

- 3/8" Variable Speed, Heavy Duty Drill for use with adapter attachment
- Extension Cord for Drill

Should it become necessary to replace a complete overhead unit or raise a monitor, perform the following steps:

1. Check the fuse assembly located in the power receptacle to make sure that it is set to the proper voltage rating. Also check the fuses inside the assembly to make sure that they are set to the correct ratings. Refer to the figure titled Selecting Input Voltage for transformers.

Input Voltage	Fuse Ratings Slo-Blow
110-120 VAC	2 AMP (27"), 3 AMP (36")
220-240 VAC	1 AMP (27"), 1.6 AMP (36")

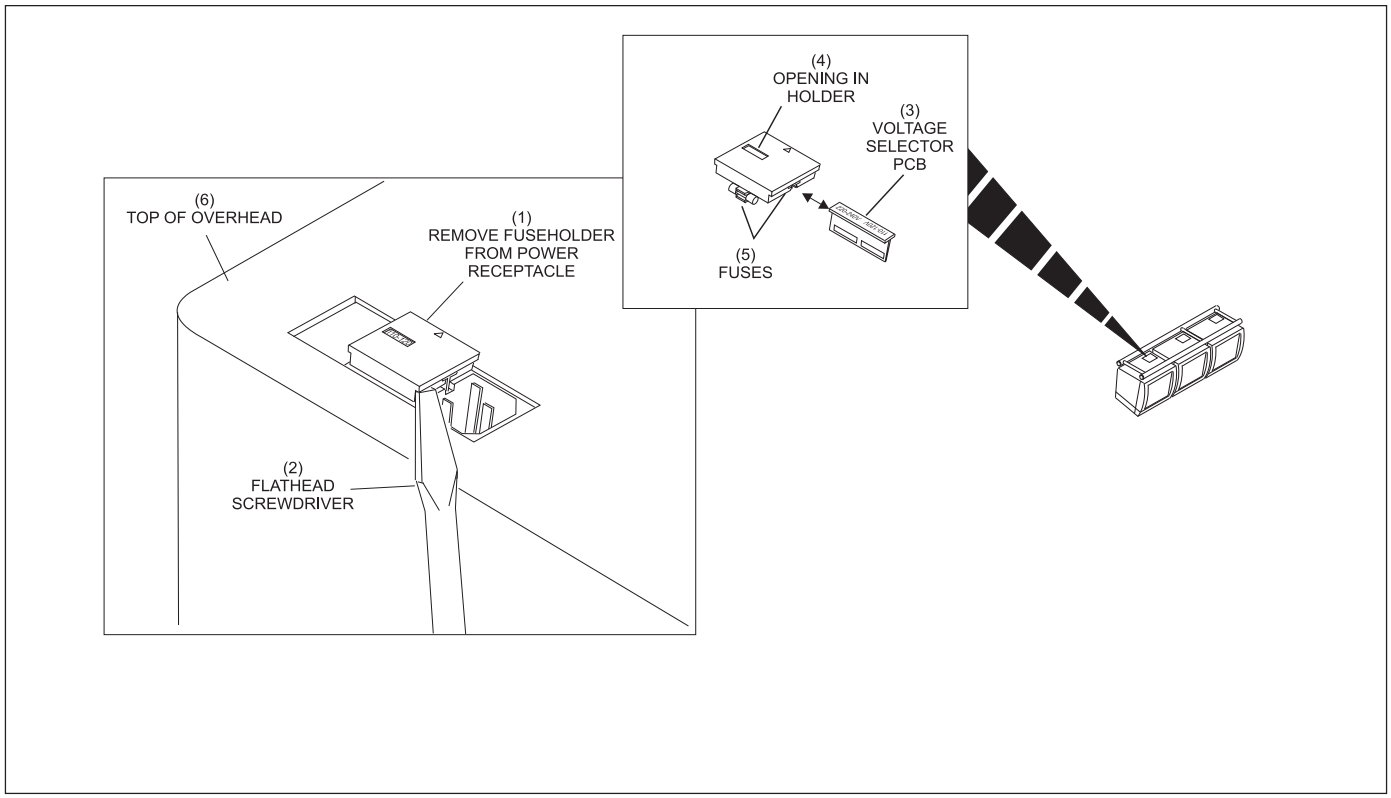

Selecting Input Voltage Transformers

(1) REMOVE FUSE HOLDER FROM POWER RECEPTACLE
(2) FLATHEAD SCREW DRIVER
(3) VOLTAGE SELECTOR PCB
(4) OPENING IN HOLDER
(5) FUSES
(6) TOP OF OVERHEAD

2. Place the winch assembly on top of the overhead support weldment and position it in the notches located on the flat cross brace.

CAUTION!

Make sure the winch is positioned so the lowering mechanism is at the front of the overhead and the lowering strap is in front of the flat cross brace.

3. Extend the winch strap to the approach and attach the winch strap to the U-bolt located at the top of the monitor. Refer the figure titled *Attachment of the Winch Assembly to the Weldment and Monitor.*

4. Place the crank handle or drill adapter on the winch and raise the overhead by turning the crank counterclockwise until front J-bolts of the monitor can be attached to the weldment. Attach the J-bolts to the weldment.

NOTE:

Using a variable speed drill with the supplied attachment to lower the monitor will speed up the process. Refer to Suggested Tools.

5. Turn the crank clockwise to lower the monitor.

6. Remove the winch strap from the monitor.

7. Tilt the rear of the monitor upward and install the rear retaining hardware.

8. Connect the following cables from the overhead:

a.	AC power cable	(All monitor types)
b.	Video In (P1)	(All monitor types)
c.	TV In (P2)	(Regular monitor)
d.	TV Out (P2)	(Regular monitor)
e.	Video Out (P2)	(TV Only monitor)
f.	LLAN In (P3)	(TV Only monitor)
g.	LLAN Out (P4)	(TV Only monitor)

Overhead Electronics

The circuit boards for an overhead monitor are located behind the picture tube in the back of the cabinet. The boards are accessed by unlatching a rear access panel. Refer to *Cabinet Access* and the figure titled *Removal of the Circuit Board Access Panel*.

The components located behind the picture tube include a Video Processor PCB, a Video Output PCB, a Power Transformer, a Power Relay, and a Video Interface PCB or the TV-Only PCB. Mounted on the access door or to the top of the chassis is a five-control Adjustment PCB. Refer to the figure titled *Circuit Board Locations*.

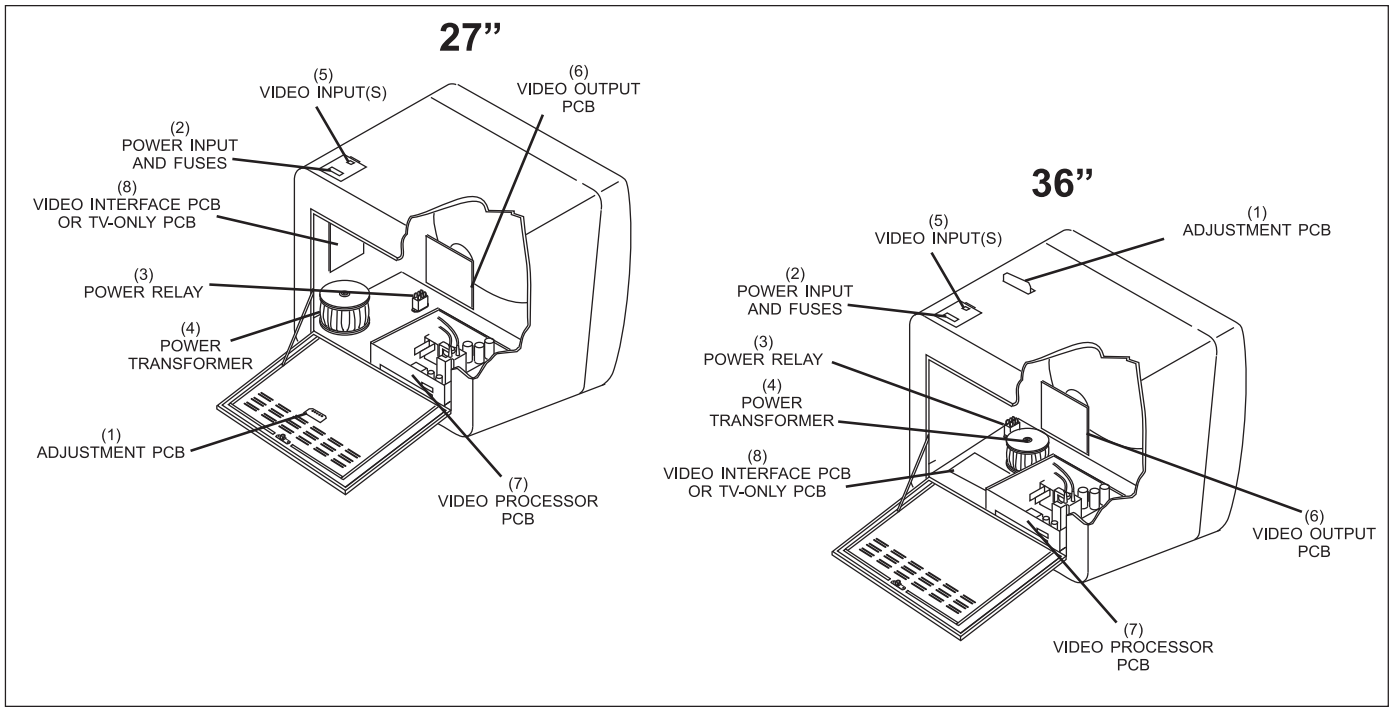

Circuit Board Locations

The function of the components that may be located inside the back of the overhead are:

(1) **Adjustment PCB -** A circuit board located on the lower or back access panel that allows a technician to conveniently adjust the monitor brightness, picture size and picture position.

(2) **Power Input and Fuses -** Voltage receptacle where main power enters the overhead. The input voltage is selected using a plug-in voltage selector module. Fuses in the module protect the incoming power. Refer to *Selecting Input Voltage*.

(3) **Power Relay -** The relay that causes the monitor to turn on or off. This relay is controlled by the Receiver PCB or the TV Only PCB.

(4) **Power Transformer -** The device that adapts the incoming power (120 VAC or 240 VAC) for use by the circuits inside the overhead.

(5) **Video Input(s) -** Input for the RGBS video coming from the Scorer Computer.

(6) **Video Output PCB -** A circuit board located in the back of the monitor and attached to the back of the picture tube. This PCB is responsible for applying the video to the color guns located inside the picture tube.

(7) **Video Processor PCB -** A circuit board located in the back of the monitor that adapts the video so that it can be properly displayed on the CRT. The Video Processor PCB controls the coils attached to the CRT and sends the video to the Video Output PCB so it can be shown on the picture tube.

(8) **Video Interface PCB -** A circuit board located inside regular monitors that selects the incoming scoresheet or TV video and adapts it so that the Video Processor PCB can use it. The PCB also determines when to turn the monitor on or off. (In TV-Only monitors, this PCB is replaced with a TV-Only PCB.)

TV Only PCB - A circuit board located inside the TV Only monitor that adapts the TV/VCR video so that the Video Processor can use it. This PCB also determines when to turn the monitor on or off. (In regular monitors, this PCB is replaced with a Video Interface PCB.)

As stated at the beginning of this section, it is important to determine the type of overhead being serviced. The regular overhead monitor and the TV Only monitor contain many of the same circuit boards but are not exactly the same. Refer to the figure titled *Circuit Boards Location.*

Selecting the Input Voltage

To select the input voltage for the Power Transformer do the following:

1. Disconnect the power cord from the Overhead.

2. Using a flat head screwdriver, remove the fuse holder from the power receptacle.

3. Remove the Voltage Selector PCB from the holder assembly.

4. Insert the Voltage Selector PCB so the desired voltage rating can be seen through the opening in the holder. Refer to the figure titled *Selecting Input Voltage for the Transformer*.

5. Check the ratings of the fuses located in the fuse holder to verify that they are correct.

Input Voltage	Fuse Ratings - Slo-Blow
110-120 VAC	2 AMP (27"), 3 AMP (36")
220-240 VAC	1 AMP (27"), 1.6 AMP (36")

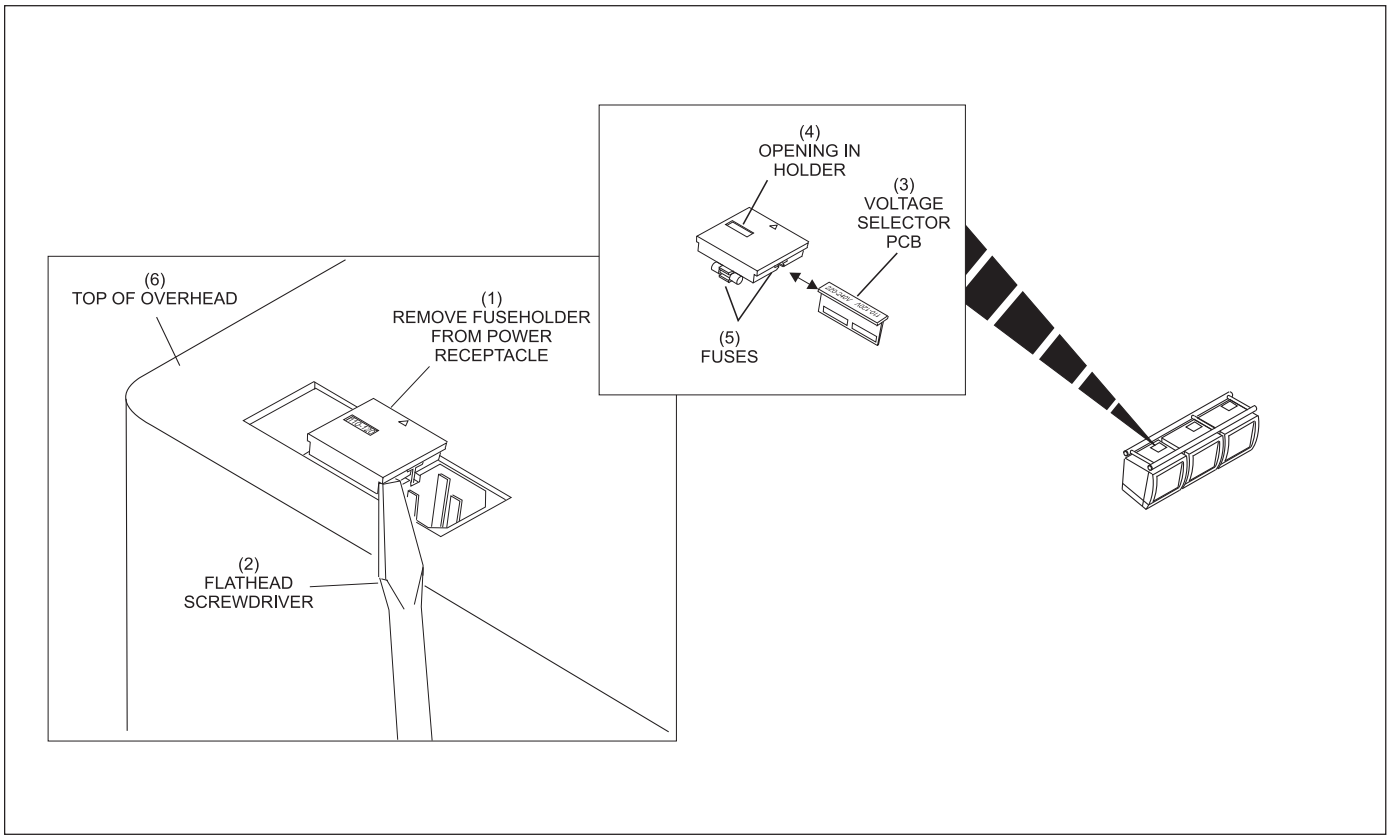

Selecting Input Voltage for the Transformer

(1) REMOVE FUSE HOLDER FROM POWER RECEPTACLE
(2) FLAT HEAD SCREWDRIVER
(3) VOLTAGE SELECTOR PRINTED CIRCUIT BOARD
(4) OPENING IN HOLDER
(5) FUSES
(6) TOP OF OVERHEAD

Video Interface PCB

The Video Interface PCB is used in the regular overhead monitors. A signal from the Scorer computer allows the board to select the incoming scoresheet or TV video. After the video has been selected the PCB amplifies it so that the Video Processor PCB inside the overhead can use it. The PCB also energizes the monitor's power relay with 12VDC when it senses the presence of the sync portion of the video signal.

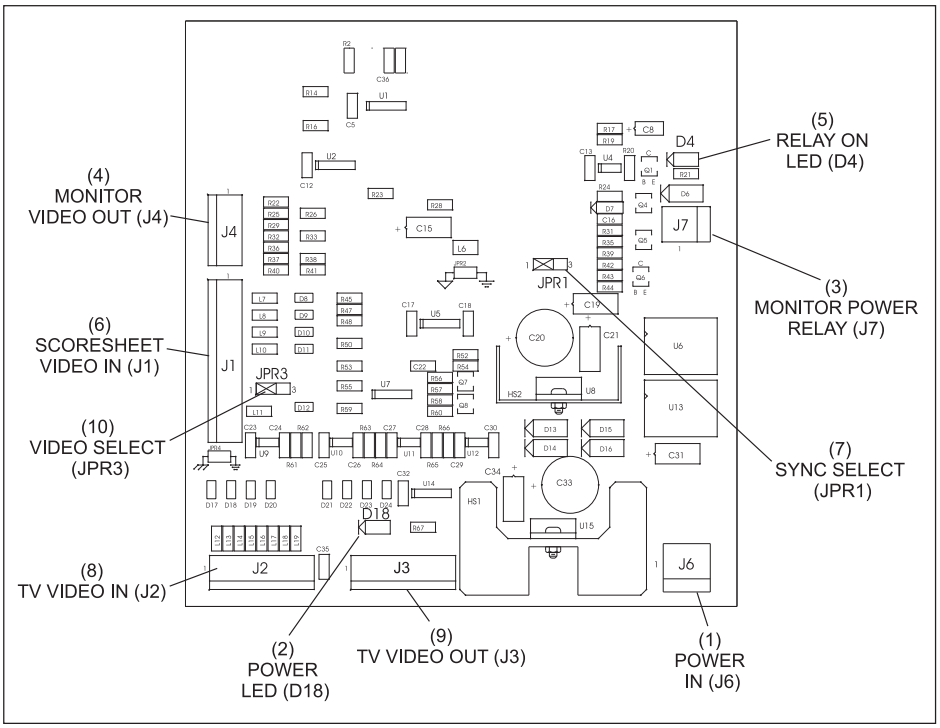

Video Interface PCB Connections

The functions of the components and connectors on the Interface PCB are:

(1) **Power In (J6)** - Connection to the Power Transformer. 30 VAC enters the PCB at this connector.

(2) **Power On LED (D18)** - This LED lights when the Interface PCB has power.

(3) **Monitor Power Relay (J7)** - Connection to the coil of the monitor power relay. 12 VDC is sent to the coil from this connector.

(4) **Monitor Video Out (J4)** - Output to the Video Processor PCB for the video that was selected and amplified by the interface board.

(5) **Relay On LED (D4)** - This LED lights when 12VDC is sent to the monitor relay.

(6) **Scoresheet Video In (J1)** - Connection for the video coming from the Scorer Computer.

(7) **Sync Select (JPR1)** - Jumper used to configure whether the Sync signal of the TV video or the scorer video is used to control the monitor relay. Set the jumper to short pins 1 and 2.

(8) **TV Video In (J2)** - Connection for the TV video signal originating at the control desk A/V box.

(9) **TV Video Out (J3)** - Output connection that allows the TV video signal to continue to additional overhead monitors.

(10) **Video Select (JPR3)** - Jumper used to determine whether TV video can be displayed on the overhead. Set this Jumper to short pins 1 and 2 to allow both scoresheet and TV video

TV Only PCB

The TV-Only PCB replaces the Interface PCB when a monitor is used for TV Only display. This board adapts the Global video signal so that it can be used by the monitor. The board also turns the monitor on/off. Whenever an on or off instruction is sent through the lane's LLAN cable, the PCB will energize (or de-energize) the 12 VDC monitor power relay. A lane ID setup switch allows the scorer computer to uniquely identify each TV-Only monitor connected to the LLAN. Refer to the figure titled *TV Only PCB.*

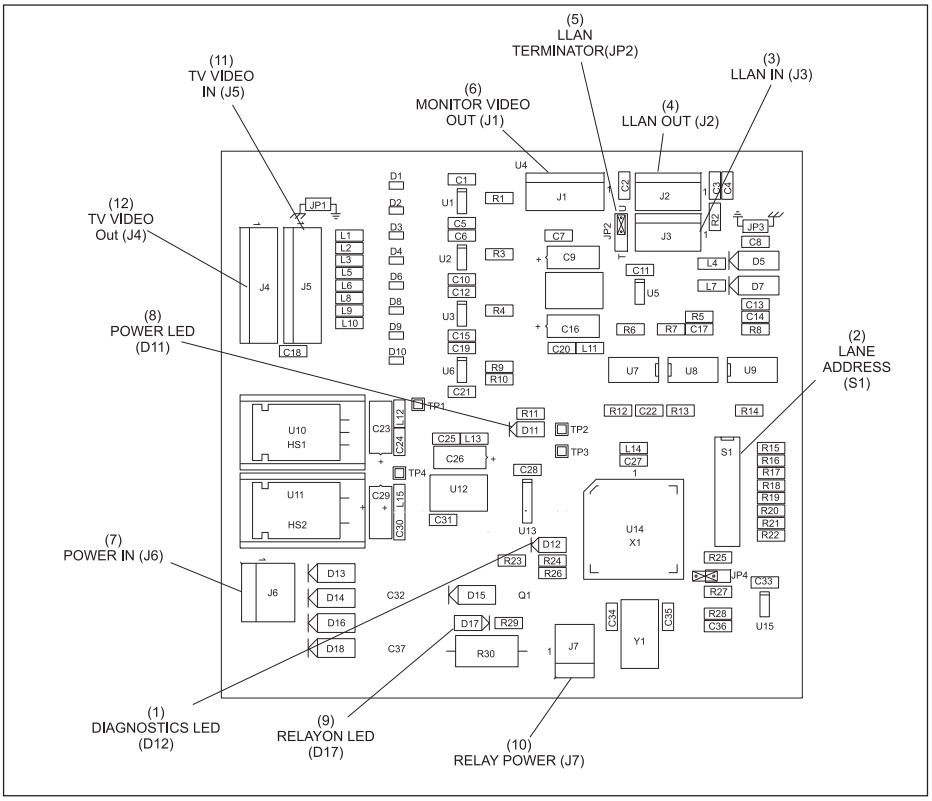

TV Only PCB

The functions of the connector and components on the TV Only PCB are:

(1) **Diagnostics LED (D12)** - This LED flashes indicating the board is functioning.

(2) Lane Address (S1) - This bank of eight switches is used to assign a unique lane ID to the monitor so that the scorer computer can turn it on or off through the LLAN cable. For Vector scoring the Address is set to the odd lane number of the lane pair it is associated with.

Lane No.	SW 1 Value =1	SW 2 Value = 2	SW 3 Value = 4	SW 4 Value =8	SW 5 Value = 16	SW 6 Value =32	SW 7 Value = 64	SW 8 Value =128
1	ON	OFF	OFF	OFF	OFF	OFF	OFF	OFF
2	OFF	ON	OFF	OFF	OFF	OFF	OFF	OFF
3	ON	ON	OFF	OFF	OFF	OFF	OFF	OFF
4	OFF	OFF	ON	OFF	OFF	OFF	OFF	OFF
5	ON	OFF	ON	OFF	OFF	OFF	OFF	OFF
6	OFF	ON	ON	OFF	OFF	OFF	OFF	OFF
7	ON	ON	ON	OFF	OFF	OFF	OFF	OFF
8	OFF	OFF	OFF	ON	OFF	OFF	OFF	OFF
9	ON	OFF	OFF	ON	OFF	OFF	OFF	OFF
10	OFF	ON	OFF	ON	OFF	OFF	OFF	OFF
11	ON	ON	OFF	ON	OFF	OFF	OFF	OFF
12	OFF	OFF	ON	ON	OFF	OFF	OFF	OFF
13	ON	OFF	ON	ON	OFF	OFF	OFF	OFF
14	OFF	ON	ON	ON	OFF	OFF	OFF	OFF
15	ON	ON	ON	ON	OFF	OFF	OFF	OFF
16	OFF	OFF	OFF	OFF	ON	OFF	OFF	OFF
17	ON	OFF	OFF	OFF	ON	OFF	OFF	OFF
18	OFF	ON	OFF	OFF	ON	OFF	OFF	OFF
19	ON	ON	OFF	OFF	ON	OFF	OFF	OFF
20	OFF	OFF	ON	OFF	ON	OFF	OFF	OFF
21	ON	OFF	ON	OFF	ON	OFF	OFF	OFF
22	OFF	ON	ON	OFF	ON	OFF	OFF	OFF
23	ON	ON	ON	OFF	ON	OFF	OFF	OFF
24	OFF	OFF	OFF	ON	ON	OFF	OFF	OFF
25	ON	OFF	OFF	ON	ON	OFF	OFF	OFF
26	OFF	ON	OFF	ON	ON	OFF	OFF	OFF
27	ON	ON	OFF	ON	ON	OFF	OFF	OFF
28	OFF	OFF	ON	ON	ON	OFF	OFF	OFF
29	ON	OFF	ON	ON	ON	OFF	OFF	OFF
30	OFF	ON	ON	ON	ON	OFF	OFF	OFF
31	ON	ON	ON	ON	ON	OFF	OFF	OFF
32	OFF	OFF	OFF	OFF	OFF	ON	OFF	OFF
33	ON	OFF	OFF	OFF	OFF	ON	OFF	OFF
34	OFF	ON	OFF	OFF	OFF	ON	OFF	OFF
35	ON	ON	OFF	OFF	OFF	ON	OFF	OFF
36	OFF	OFF	ON	OFF	OFF	ON	OFF	OFF
37	ON	OFF	ON	OFF	OFF	ON	OFF	OFF
38	OFF	ON	ON	OFF	OFF	ON	OFF	OFF
39	ON	ON	ON	OFF	OFF	ON	OFF	OFF
40	OFF	OFF	OFF	ON	OFF	ON	OFF	OFF

(3) **Local LAN In (J3)** - Connection for the communication cable (LLAN) coming from the Scorer Computer. This signal allows the overhead to turn on/off.

(4) **Local LAN Out (J2)** - Connection to continue the communication cable (LLAN) to additional monitors if needed. If the signal does not continue to additional TV-only monitors the signal is terminated. Refer to *(5) LAN Terminator (JP2)*.

(5) **LAN Terminator (JP2)** - Jumper used to terminate the LLAN cable if it does not continue to additional monitors. Reference *(3) Local LAN In (J3)*. To terminate the signal, install a jumper on pins 2 and 3. To continue the signal, jumper pins 1 and 2.

Installation	Jumper Position
Set to terminate if the LLAN signal does not continue from J2	T U Pins 2 and 3 (3 2 1)
Set to un-terminate if the LLAN signal continues from J2 Refer to (4) Local LAN Out.	T U Pins 2 and 3 (3 2 1)

(6) **Monitor Video Out (J1)** - Output to the Video Processor PCB for the video.

(7) **Power In (J6)** - Connection to the Power Transformer. 30VAC enters the PCB at this connector.

(8) **Power LED (D 11)** - This light is on whenever the PCB is powered by 36 VAC. Refer to *(7) Power In (J6)*.

(9) **Relay On LED (D17)** - This LED lights when 12VDC is sent to the monitor relay.

(10) **Power Relay (J7)** - Connection to the coil of the power relay in the monitor. 12 VDC is sent to the coil from this connector. The board controls monitor on/off from this connection.

(11) **TV Video Input (J5)** - Connection for the TV video signal originating at the control desk A/V box.

(12) **TV Video Output (J6)** - Output connection that allows the TV video signal to continue to additional overhead monitors.

Video Processor PCB

The Video Processor PCB handles all sync and color signals for the CRT. It contains circuitry such as vertical and horizontal oscillators to control how the picture is written to the screen and color circuits that automatically control the red, green and blue video signal applied to the picture tube. The only adjustments necessary to the board are focus and pincushion. The remaining adjustments are located on the lower access panel. Refer to the figure titled *Video Processor PCB for Overhead Monitors.*

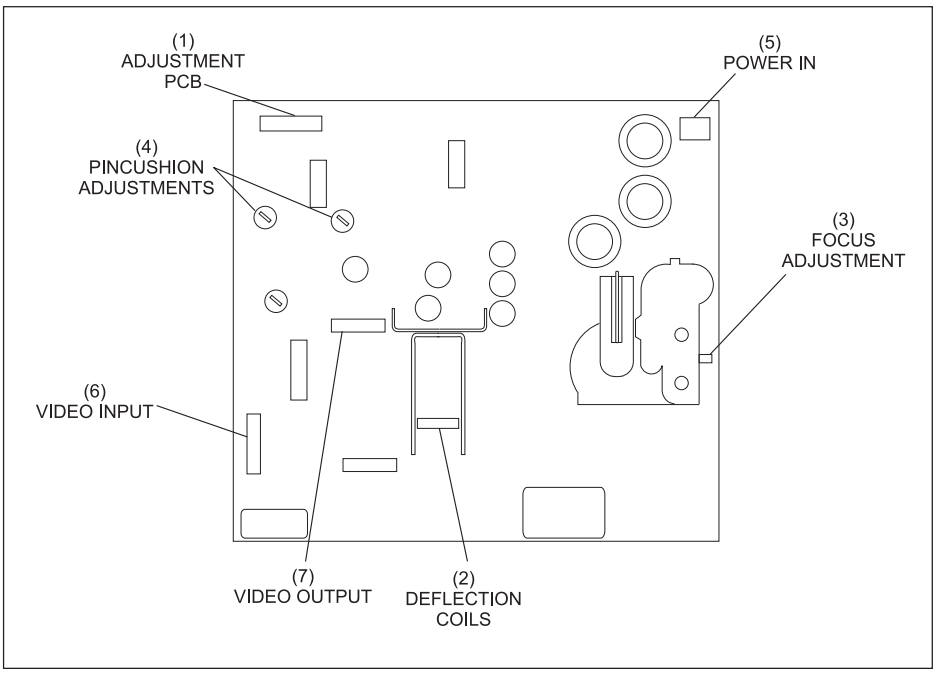

Video Processor PCB for Overhead Monitors

The functions of the connectors and controls on the Video Processor PCB are:

(1) **Adjustment PCB -** Connector to the Adjustment Board located on the lower access panel. This allows a more convenient location to perform screen adjustments.

(2) **Deflection Coils -** Connection to the deflection coil located on the neck of the picture tube. This allows the Video Processor to control where information is put on the screen.

(3) **Focus Adjustment -** Adjustment used to control the sharpness of the picture.

(4) **Pincushion Adjustments -** Adjustments used to control the top and sides of the picture so that excessive rounding or bending is eliminated. Refer to the definition of *pincushion* in Glossary.

(5) **Power In -** 120 VAC main power input to the PCB. This power is controlled by the Video Interface or the TV Only PCB and is switched through the power relay.

(6) **Video Input** - Input of the RGBS signal coming from the Video Interface or TV Only PCB.

(7) **Video Output** - Output to the Video Output PCB.

WARNING!

Before replacing the Video Processor module, any voltage in the CRT or high voltage area of the PCB must be discharged. Refer to the discharge procedure for further information.

Discharge Procedure

1. Disconnect main power from the overhead unit.
2. Attach one end of a 14 gauge or larger wire to the shaft of an insulated handled screwdriver.
3. Attach the other end of the wire to the chassis ground of the overhead.
4. With the insulated handle in your hand, slide the tip of the screwdriver under the anode lead protective cup located on the top of the CRT.
5. A slight "pop" may be heard when the module discharges. Touch the metal connection under the cup until the popping quits.

WARNING!

The voltage on the anode can exceed 26,000 volts. To ensure safety, always perform the above procedure with one hand. Place the other hand inside a pocket or behind your back. DO NOT PLACE YOUR UNUSED HAND ON ANY METAL ATTACHED TO THE OVERHEAD!

Video Output PCB

The Video Output PCB receives the RGB Signal and grid voltage from the Video Processor Module and applies them to the CRT. There are no adjustments on this PCB. Refer to figure titled *Video Output PCB*.

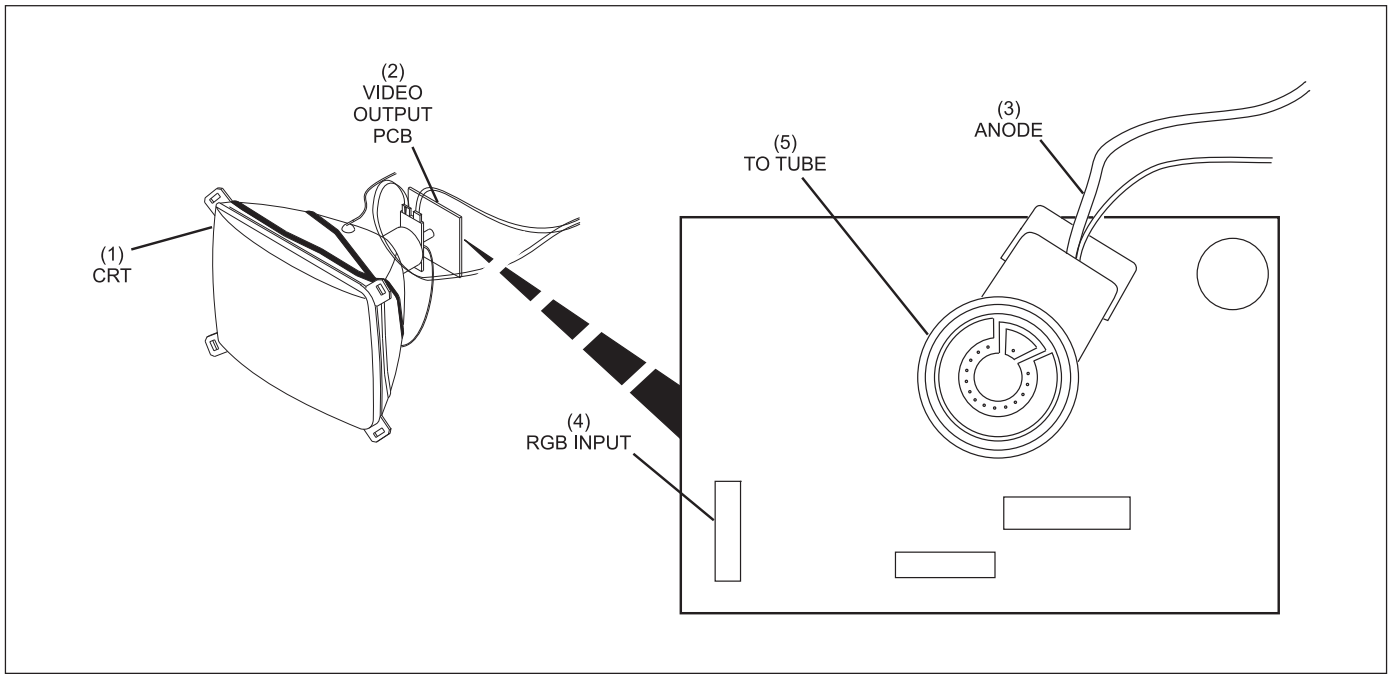

Video Output PCB

(1) CRT
(2) VIDEO OUTPUT PCB
(3) ANODE
(4) RGB INPUT
(5) TO TUBE

Power Transformer

The power transformer adapts the incoming voltage to the proper level needed inside the overhead. The transformer can be wired to accept 115 VAC or 230 VAC as an input. The selection of the input voltage is accomplished by a voltage selector module located next to the power input receptacle. Refer to the figure titled *Power Transformer*.

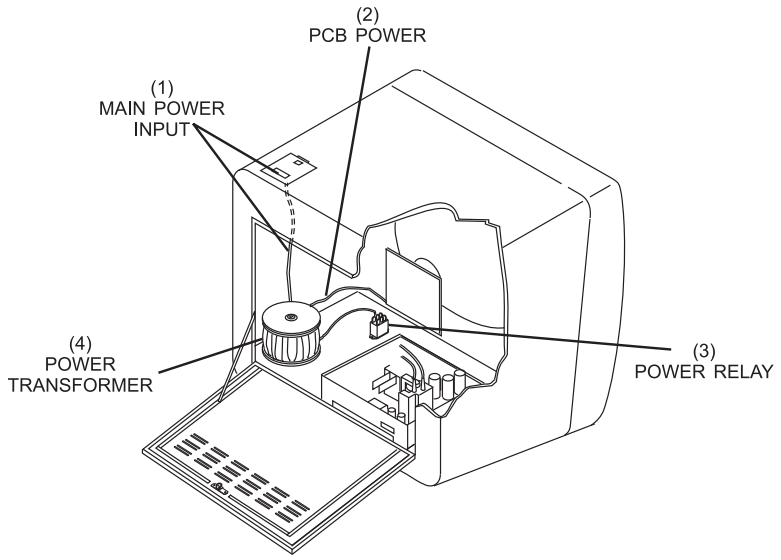

Power Transformer

(1) MAIN POWER INPUT
(2) PCB POWER
(3) POWER RELAY
(4) POWER TRANSFORMER

The transformer secondary coils provide 115 VAC, 15 VAC, 30 VAC and other voltages needed by the PCBs in the overhead. Refer to the figure titled *27" Monitor Main Power Transformer*.

The connections to the power transformer are:

(1) **Main Power Input -** Cable to the power input connection located at the top of the overhead. The power transformer can accept 115 VAC or 230 VAC.

(2) **PCB Power -** Cable used to power either the Video Interface PCB or the TV Only PCB. The power transformer supplies 30 VAC to these PCBs.

(3) **Power Relay -** Cable that attaches to the contacts of the monitor power relay (120 VAC).

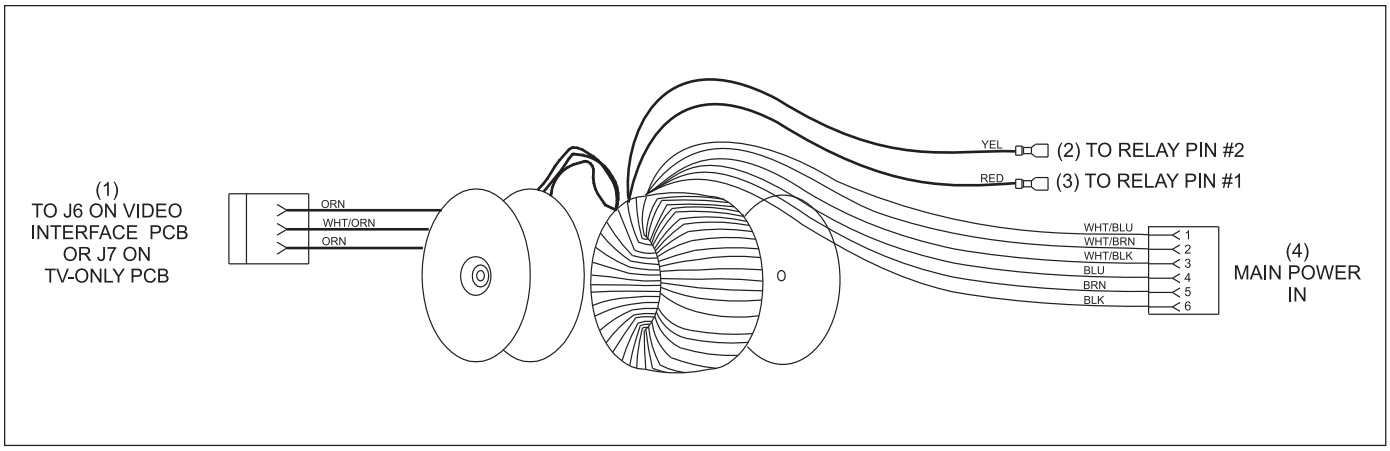

Overhead Monitor Transformer Assembly

(1) TO J6 ON VIDEO INTERFACE PRINTED CIRCUIT BOARD
(2) TO RELAY PIN #2
(3) TO RELAY PIN #1
(4) MAIN POWER IN

Power Relay

The power relay is used to control the on or off operation of the monitor. It does this by switching 120 VAC to the Video Processor Module. (The 12 VDC coil of the relay is controlled by the Video Interface PCB or the TV Only PCB.) Refer to the figure titled *Overhead Power Relay*.

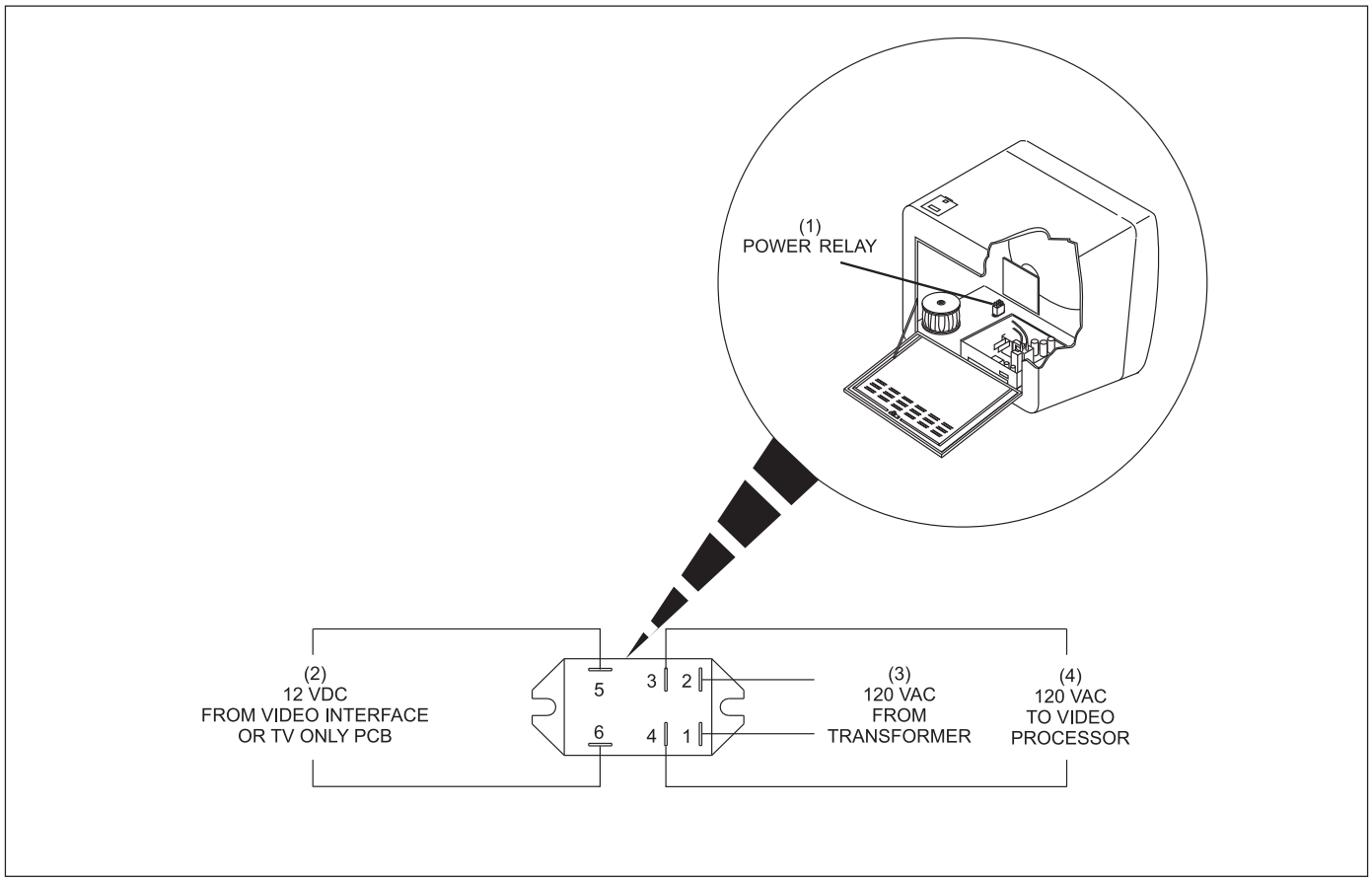

Overhead Power Relay

(1) POWER RELAY

(2) 120 VOLTS ALTERNATING CURRENT FROM VIDEO INTERFACE OR TV ONLY PCB

(3) 120 VOLTS ALTERNATING CURRENT FROM TRANSFORMER

(4) 120 VOLTS ALTERNATING CURRENT TO VIDEO PROCESSOR

Adjustments

The adjustments for the Overhead are located on the Video Processor PCB or the Adjustment PCB. These controls allow the technician to adjust pincushion, focus, brightness, and image position.

WARNING!

The voltage surrounding the controls on the Video Processor PCB can be dangerous. Always perform these adjustments using one hand. Place the other hand behind your back or in your pocket. Do not let your free hand rest on the metal chassis of scorer.

Focus

This control is located on the Video Processor Module at the high voltage transformer. To adjust the focus, turn the control until the desired picture sharpness is obtained. Refer to the figure titled *Video Processor Focus Control*.

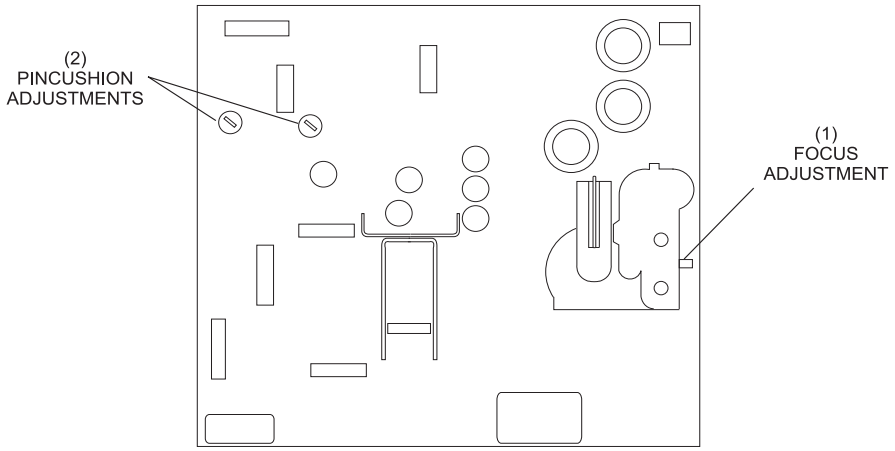

Video Processor Focus Control

(1) FOCUS ADJUSTMENT (2) PINCUSHION ADJUSTMENTS

Pincushion

NOTE:

The pincushion adjustment is performed at the factory and should not need readjusting. If problems occur after tube replacement or after the Video Processor Module is replaced, the screen can be adjusted in the following way.

The pincushion controls are located on the Video Processor PCB. The controls allow a technician to eliminate unwanted curvature in the perimeter of the video. To adjust, simply turn the control in the desired direction until unwanted distortion is eliminated.

Screen Size Adjustments

The following controls allow the technician to adjust the image position on a CRT. All controls are located on the Adjustment PCB mounted on the lower access panel.

H Pos - Turn this adjustment to center the video horizontally (side-to-side). This control is commonly referred to as horizontal centering.

H Size - Turn this adjustment to increase or decrease the picture horizontally (side-to-side). This control is commonly referred to as horizontal width.

V Ras Pos - Turn this adjustment to center the picture vertically (top-to-bottom). This control is commonly referred to as vertical centering.

V Size - Turn this control to increase or decrease the picture vertically (top-to-bottom). This control is commonly referred to as vertical width.

(1) H POS
(2) H SIZE
(3) V RAS POS
(4) V SIZE
(5) M GAIN

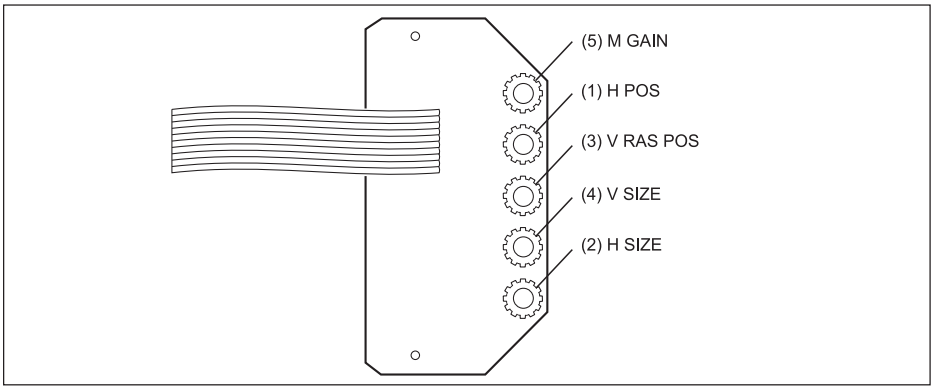

Adjustment PCB Controls

Screen Brightness

The following adjustment allows the technician to adjust the brightness of the CRT. The control is located on the lower access panel.

M Gain - Turn this adjustment to increase or decrease the screen brightness.

AGC/Black Level Adjustment - Turn this optional adjustment to increase or decrease the screen brightness.

G-2 Adjustment

For both the 27" and 36" overheads, the voltage should be set at 4.2 Volts +/- 0.2 volts.

To measure the voltage, connect the negative lead of your meter to the chassis ground. Attach the positive lead to PIN 8 of the op amp chip located on the Video Output PCB. Adjust as needed by turning the G-2 control located on the flyback transformer of the Video Processor PCB. Refer to Figure titled *Video Output PCB*.

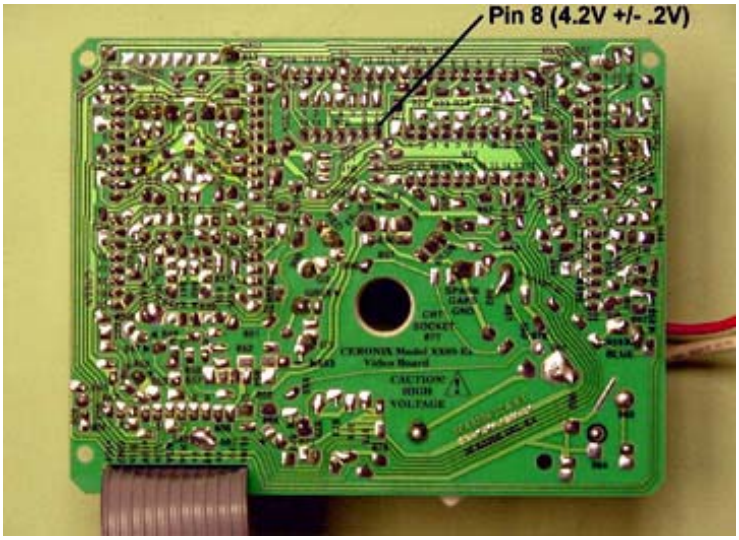

Video Output PCB

NOTE

Some monitors have a plastic cover on the Output PCB. The small hole in the cover allows access to the test point.

Maintenance

The overhead is virtually maintenance free. There are, however, a few maintenance procedures that must be performed in order to keep the monitor operation at the optimal level.

CAUTION!:

To avoid injury or damage to the monitor, disconnect power to the monitors before servicing them.

Monthly

Clean Displays

Using a glass cleaner and a soft cloth, clean the face of the picture tube. In addition, remove any excess dust on the monitor cabinet with a vacuum and/or soft cloth.

Quarterly

Adjust Displays

Adjust the monitors to obtain a bright, clear and centered image. Refer to *Adjustments* in this section for the adjustment procedures.

Cable Diagrams

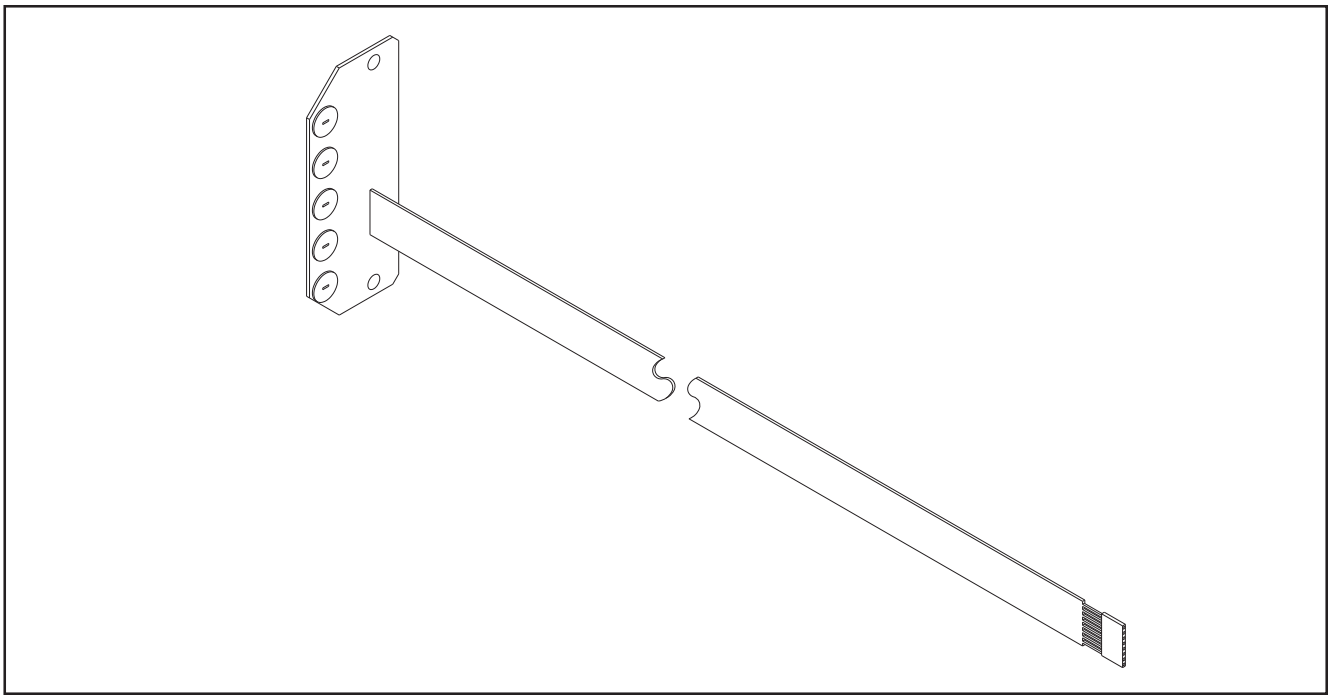

Adjustment PCB (Part No. 57-215806-000)

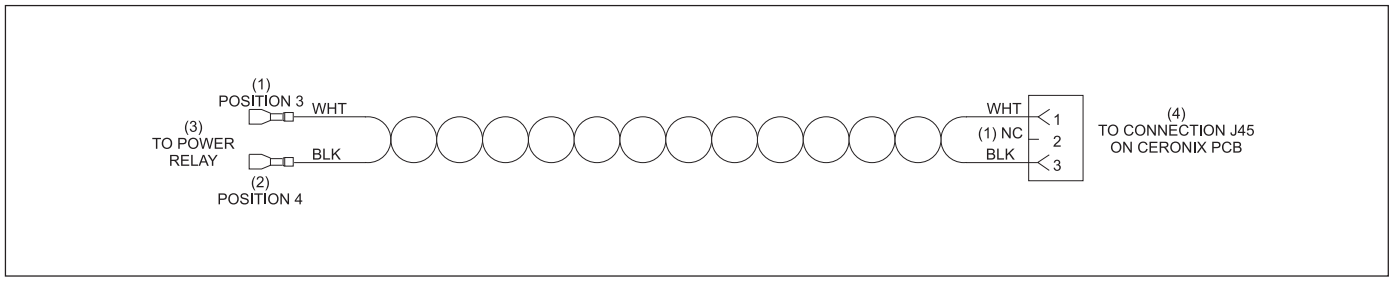

Color Overhead Monitor Power Cable (Part No. 57-215809-000)

(1) POSITION 3 (2) POSITION 4 (3) TO POWER RELAY
(4) TO CONNECTION J45 ON BRUNSWICK PCB

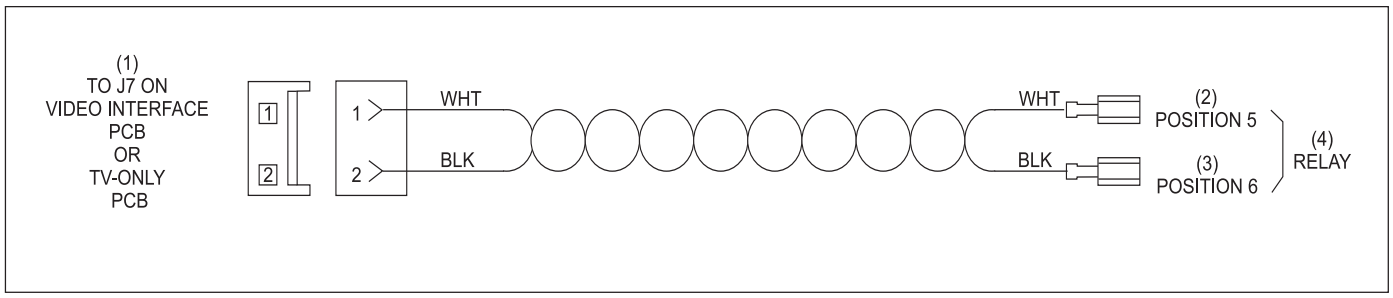

Overhead Monitor Power Control Cable (Part No. 57-300030-000)

(1) TO J7 ON VIDEO INTERFACE PCB OR TV ONLY PCB (2) POSITION 5 (3) POSITION 6
(4) RELAY

BRN=BROWN, BLK= BLACK, RED=RED, ORN=ORANGE, YEL=YELLOW, GRN=GROUND, BLU=BLUE, VIO=VIOLET, GRY=GREY, WHT=WHITE

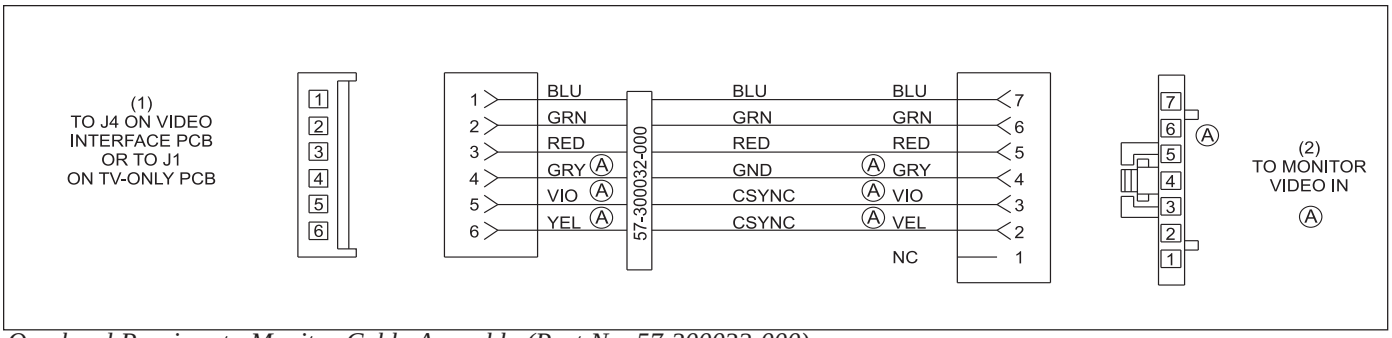

Overhead Receiver to Monitor Cable Assembly (Part No. 57-300032-000)

(1) TO J4 ON VIDEO INTERFACE PRINTED CIRCUIT BOARD OR TO J1 ON TV ONLY PRINTED CIRCUIT BOARD

(2) TO MONITOR VIDEO IN

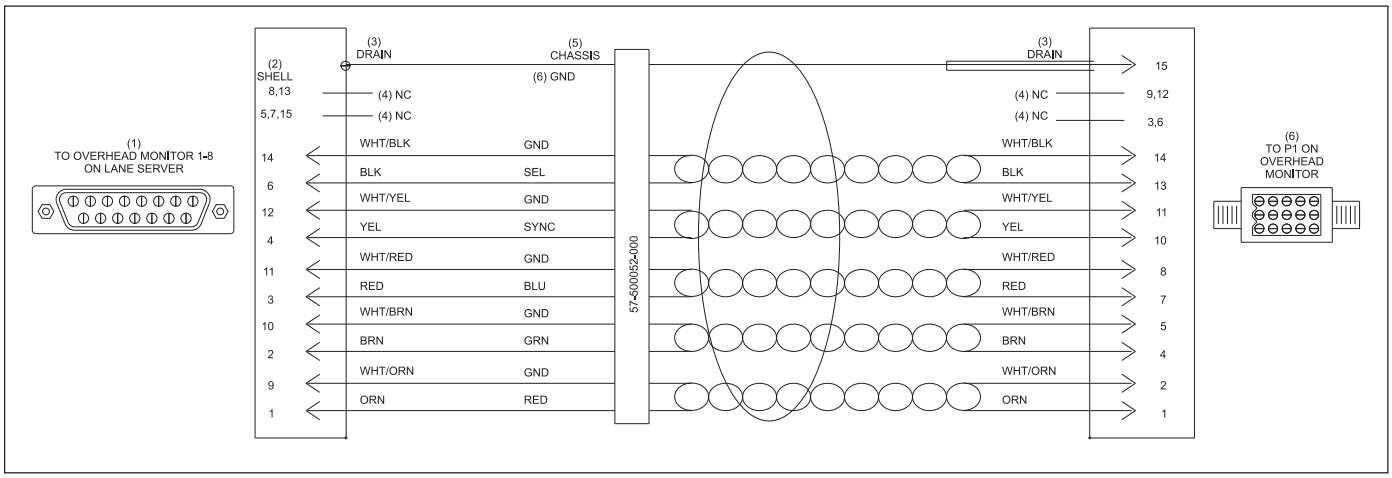

Scorer Computer to Overhead Monitor Cable (Part No. 57-500052-000)

(1) TO OVERHEAD MONITOR 1-8 ON LANE SERVER
(2) SHELL
(3) DRAIN
(4) NO CONNECTION
(5) CHASSIS
(6) TO P1 ON OVERHEAD MONITOR

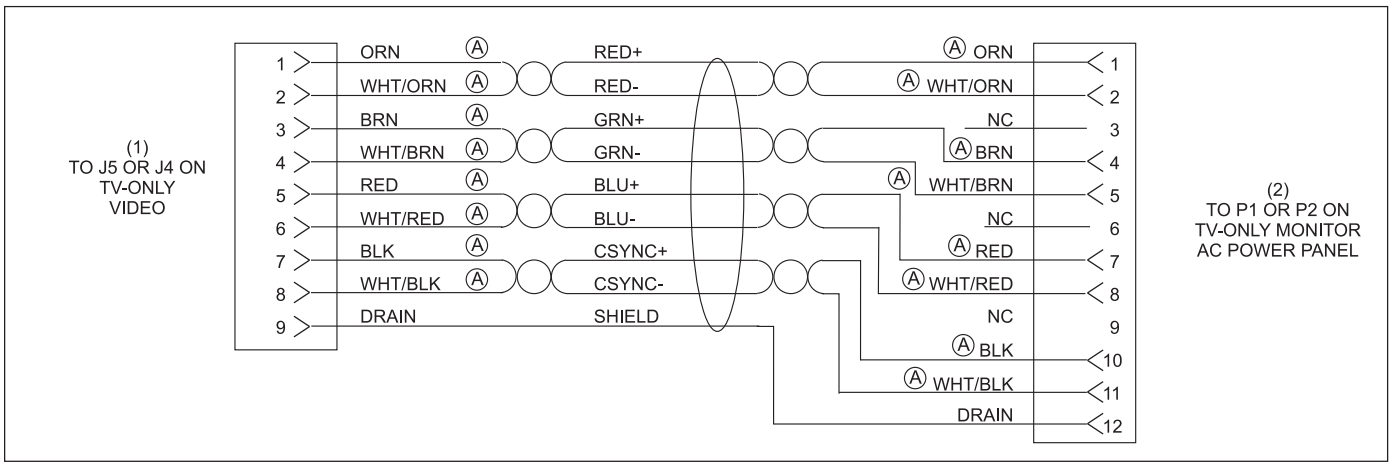

AC Power Panel to TV Only PCB Video Cable (Part No. 57-300138-000)

(1) TO J5 OR J4 ON TV ONLY VIDEO CABLE (PART NO. 57-300138-000)

(2) TO P1 OR P2 ON TV ONLY MONITOR AC POWER PANEL

BRN=BROWN, BLK= BLACK, RED=RED, ORN=ORANGE, YEL=YELLOW, GRN=GROUND, BLU=BLUE, VIO=VIOLET, GRY=GREY, WHT=WHITE

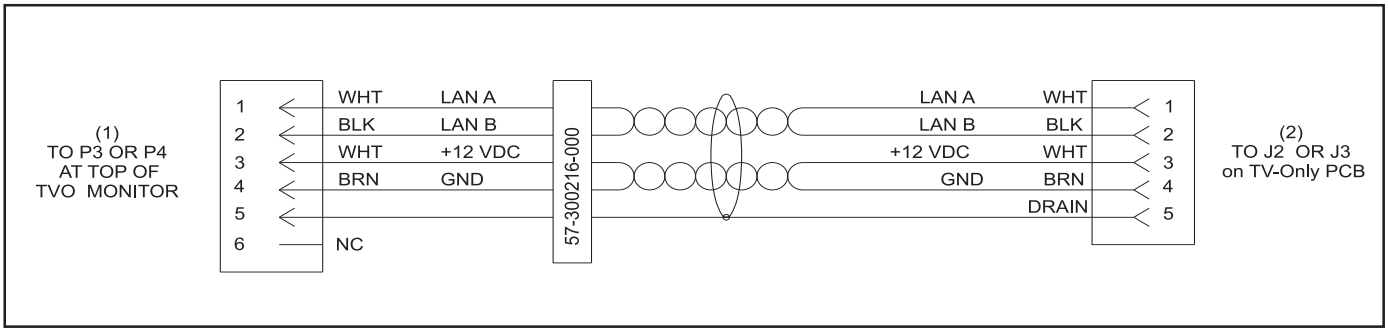

Internal LLAN Cable - TVO Monitor (Part Nos. 57-300216-000)

(1) TO P3 OR P4 AT TOP OF TVO MONITOR

(2) TO J2 OR J3 ON TV-ONLY PCB

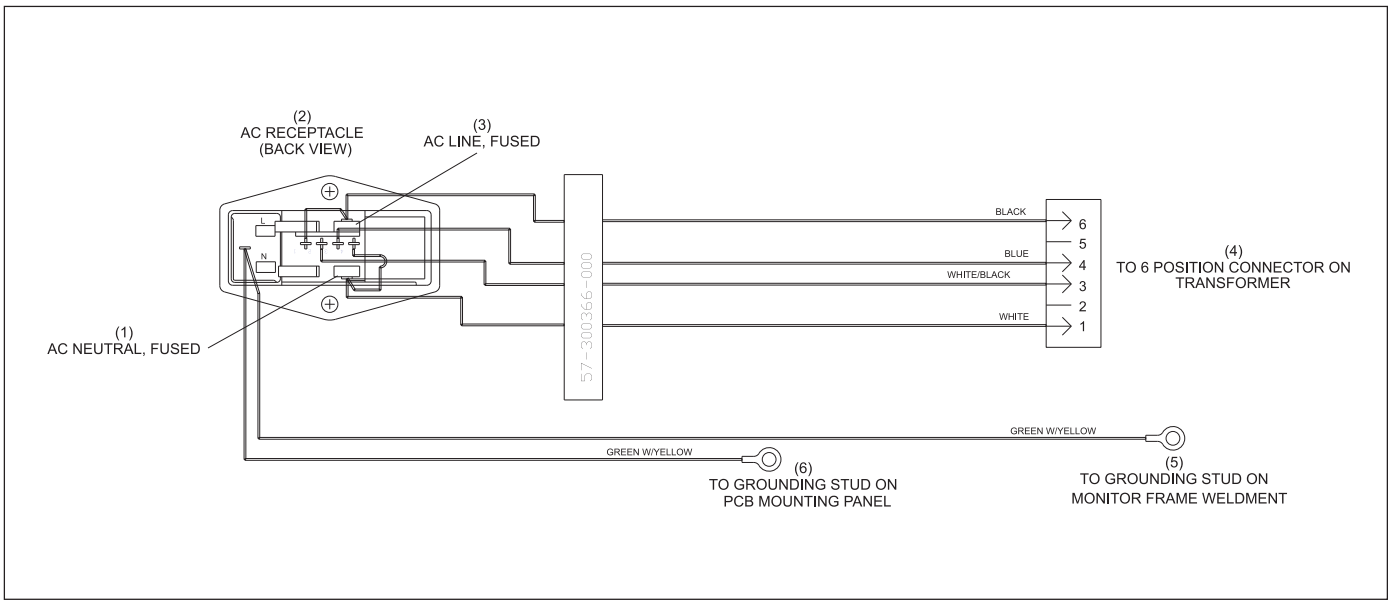

Overhead Monitor AC Power Receptacle (Part Nos. 57-300366-000, 57-301032-000)

(1) ALTERNATING CURRENT NEUTRAL, FUSED

(2) ALTERNATING CURRENT RECEPTACLE (BACK VIEW)

(3) ALTERNATING CURRENT LINE, FUSED

(4) TO 6 POSITION CONNECTOR ON TRANSFORMER

(5) TO GROUNDING STUD ON MONITOR FRAME WELDMENT

(6) TO GROUNDING STUD ON PRINTED CIRCUIT BOARD MOUNTING PANEL

BRN=BROWN, BLK= BLACK, RED=RED, ORN=ORANGE, YEL=YELLOW, GRN=GROUND, BLU=BLUE, VIO=VIOLET, GRY=GREY, WHT=WHITE

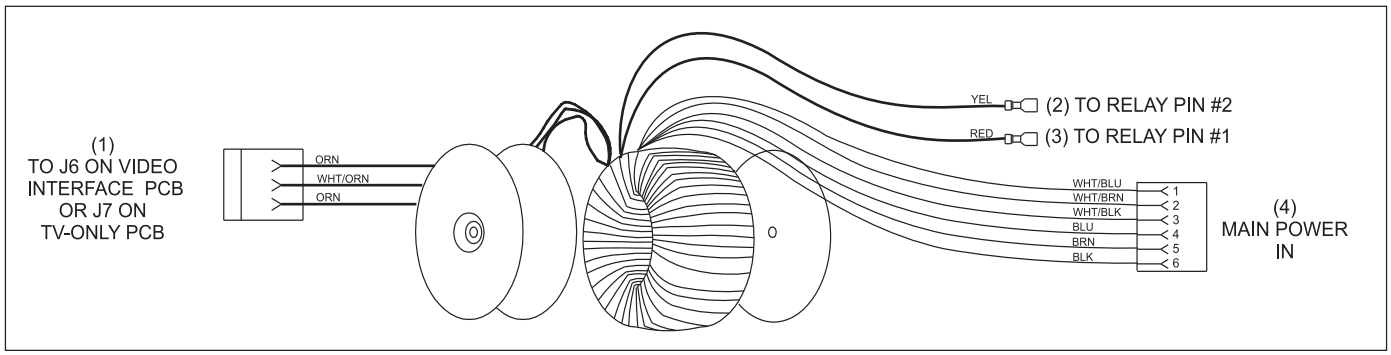

Overhead Monitor Transformer Assembly (Part No. 57-300365-000)

(1) TO J6 ON VIDEO INTERFACE PRINTED CIRCUIT BOARD OR J7 ON TV-ONLY PRINTED CIRCUIT BOARD
(2) TO RELAY PIN #2
(3) TO RELAY PIN #1
(4) MAIN POWER IN

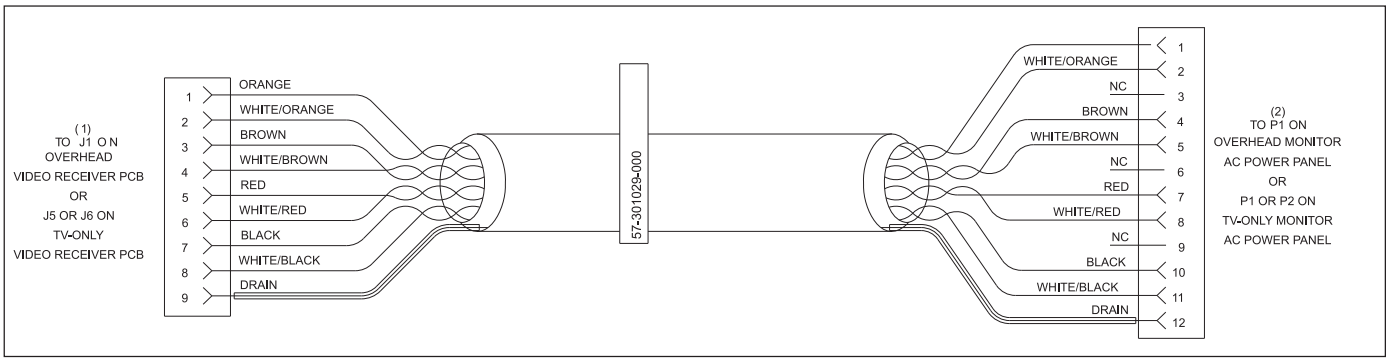

AC Power Panel to Video Interface PCB Scorer Video (Part No. 57-301029-000)

(1) TO J1 ON OVERHEAD VIDEO RECEIVER PRINTED CIRCUIT BOARD OR J5 ON TV-ONLY PRINTED CIRCUIT BOARD
(2) TO P1 ON OVERHEAD MONITOR AC POWER PANEL OR TV ONLY AC POWER PANEL
(4) MAIN POWER IN

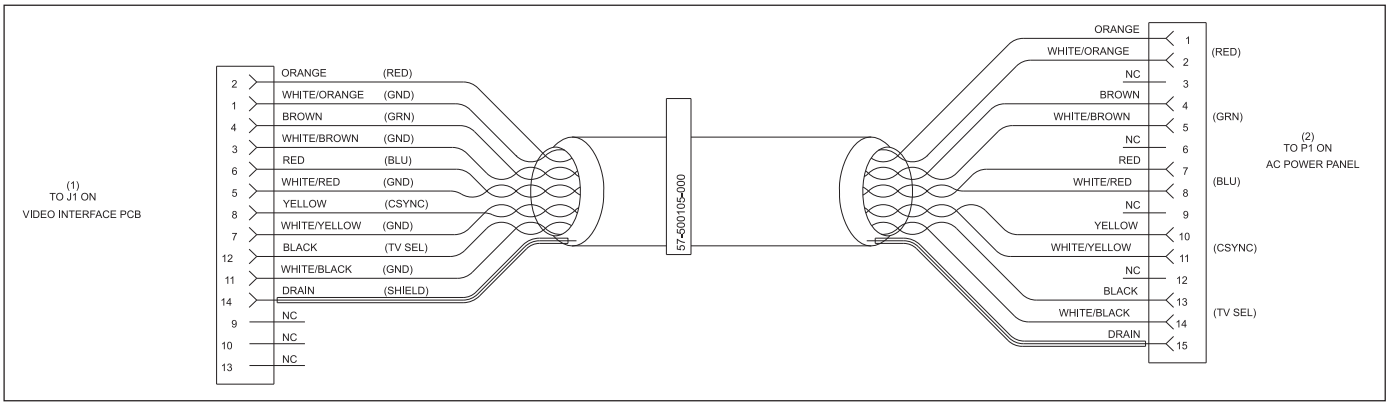

AC Power Panel to Video Interface PCB Scorer Video (Part No. 57-301029-000)

(1) TO J1 ON VIDEO INTERFACE PRINTED CIRCUIT BOARD
(2) TO P1 ON AC POWER PANEL
(4) MAIN POWER IN

BRN=BROWN, BLK=BLACK, RED=RED, ORN=ORANGE, YEL=YELLOW, GRN=GROUND, BLU=BLUE, VIO=VIOLET, GRY=GREY, WHT=WHITE

Intentionally Blank Page

See file Monitor Schematics.pdf for this page.

Back of 11 x 17 Page

See file Monitor Schematics.pdf for this page.

Back of 11 x 17 Page