Panasonic®

Digital Camera/VTR

Operating Instructions

Model No. AJ-SDC915P

DVCPRO 50

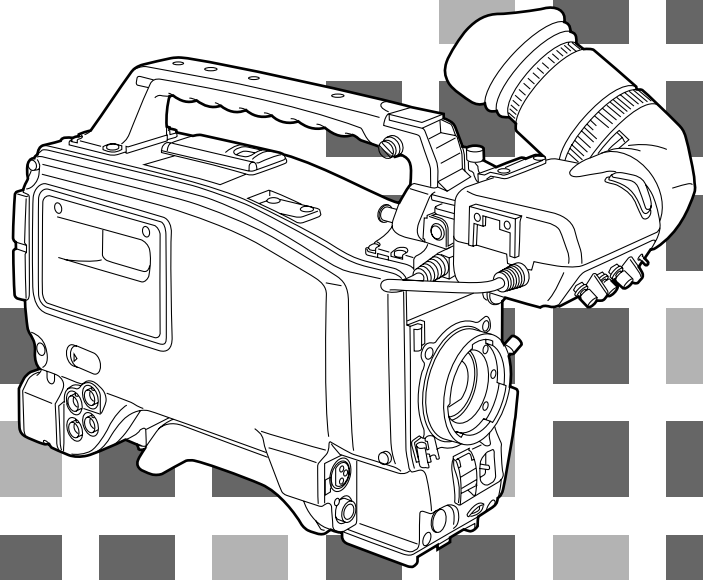

Before operating this product, please read the instructions carefully and save this manual for future use.

P Printed in Japan
F0802H D

VQT0A45

CAUTION

RISK OF ELECTRIC SHOCK DO NOT OPEN

CAUTION: TO REDUCE THE RISK OF ELECTRIC SHOCK,
DO NOT REMOVE COVER (OR BACK).
NO USER-SERVICEABLE PARTS INSIDE.
REFER SERVICING TO QUALIFIED SERVICE PERSONNEL.

The lightning flash with arrowhead symbol, within an equilateral triangle, is intended to alert the user to the presence of uninsulated "dangerous voltage" within the product's enclosure that may be of sufficient magnitude to constitute a risk of electric shock to persons.

The exclamation point within an equilateral triangle is intended to alert the user to the presence of important operating and maintenance (service) instructions in the literature accompanying the appliance.

RBRC Ni-Cd

ATTENTION:
The product you have purchased is powered by a nickel cadmium battery which is recyclable. At the end of it's useful life, under various state and local laws, it is illegal to dispose of this battery into your municipal waste stream.
Please call 1-800-8-BATTERY for information on how to recycle this battery.

Replace battery with part No. CR2032 only.
Use of another battery may present a risk of fire or explosion.
Caution—Battery may explode if mistreated.
Do not recharge, disassemble or dispose of in fire.

FCC NOTE:
This device complies with Part 15 of the FCC Rules. To assure continued compliance follow the attached installation instructions and do not make any unauthorized modifications.

This equipment has been tested and found to comply with the limits for a Class A digital device, pursuant to Part 15 of the FCC Rules. These limits are designed to provide reasonable protection against harmful interference when the equipment is operated in a commercial environment. This equipment generates, uses, and can radiate radio frequency energy and, if not installed and used in accordance with the instruction manual, may cause harmful interference to radio communications. Operation of this equipment in a residential area is likely to cause harmful interference in which case the user will be required to correct the interference at his own expense.

CAUTION:

TO REDUCE THE RISK OF FIRE OR SHOCK HAZARD AND ANNOYING INTERFERENCE, USE THE RECOMMENDED ACCESSORIES ONLY.

WARNING:

TO REDUCE THE RISK OF FIRE OR SHOCK HAZARD, DO NOT EXPOSE THIS EQUIPMENT TO RAIN OR MOISTURE.

CAUTION:

TO REDUCE THE RISK OF FIRE OR SHOCK HAZARD, REFER MOUNTING OF THE OPTIONAL BOARD TO AUTHORIZED SERVICE PERSONNEL.

▭ is the safety information.

Contents

For your safety 2
General and Features 5
●Features of the Camera Section 5
●Features of the VTR Section 8
System Configuration 9
Controls and Their Functions
●Power Supply Section 10
●Accessory Mounting Section 11
●Audio Function Section 12
●Shooting (Recording)/Playback Function Section 14
●Menu Operation Section 20
●Time Code-Related Section 20
●Warning/Status Display Section 22
Power Supply
●Using an Anton Bauer Battery Pack 23
●Using the BP-90 type Battery Pack. . . 24
●Using a Sony Battery Pack 26
●Using the Sony BP-90 Battery Pack 27
●Using the Sony BP-L60/BP-L90 lithium-ion Battery Pack 27
●Using an AC Power Supply (When Using the AJ-B75 AC Adaptor) 28
●Checking and Selecting the Type of Battery 29
Mounting the Lens 30
Adjusting the Lens Flange 31
Adjusting the White Shading 32
Adjusting the Viewfinder
●Adjusting the Position 34
●**Adjusting the Diopter and Screen** 35
●Adjusting the Eyepiece Position 35
●Detaching the Eyepiece 36
●Mounting the Viewfinder 37
●Detaching the Viewfinder 37
Audio Input Preparations
●Using the Microphone Mounted to the Main Unit 38
●Using the AJ-MC700P Microphone Kit (Option) Microphone Mounted to the Main Unit 38
●Mounting the AJ-MH700P Microphone Holder (Option) 39
●Using the Microphone not Mounted to the Main Unit 40
●Mounting a Wireless Microphone 41
●Connecting an Audio Component 41
Mounting the Unit to a Tripod 42
Mounting the Shoulder Belt 43
Adjusting the Shoulder Pad Position . . . 44
Attaching the Rain Cover 45
Connecting the AJ-EC3 Extension Control Unit (Option) 46
Displaying Menus on the Viewfinder Screen
●Displaying the Setting Menu Inside the Viewfinder 47
●Setting Menu Configuration 47
●Checking and Selecting the Master Gain Setting 48
●Selecting the Color Bar Setting 49
●Checking the DIAGNOSTIC Screen Setting 50
●Transferring to the MAIN menus and SUB menus 51
●Basic Setting Menu Operations 52
Lamp Displays Inside the Viewfinder 55
●Setting the ! Lamp Display 56
Status Displays Inside the Viewfinder Screen 57
●Selecting Display Items 60
●Display Mode and Setting Change Message 61
●Changing the Display Mode 62
●Setting the Marker Displays 62
●Setting the Camera ID 63
Displays
●Remaining Battery Level and Audio Level Displays 64
●VTR Section Operation/Status-Related Displays 64
●Time Code-Related Displays 65
Adjusting the Time and Date 66
Adjustments and Setup During Recording
●Adjustments and Setup Using theSetting Menu 67
●Setting the Gain Selector Value 68
●Selecting Functions 69

Bold letters should be set or adjusted immediately after purchase.

Contents

Adjusting the White Balance/Black Balance
- Adjusting the White Balance 70
- Adjusting the Black Balance 75

Setting the Electronic Shutter
- Shutter Modes 77
- Setting the Shutter Mode/Speed 78
- Setting the Synchro Scan Mode 79
- Changing the Shutter Speed/Mode Selection Range 80

Changing the Iris Automatic Adjustment Reference Value 80
Adjusting the Audio Level 81
Setting the Time Data
- Setting the Time Code 83
- Setting the User Bit 84
- Locking the Time Code to an External Source 85
- External Lock Operation Procedure 85

Using the user data 86
- User data operation 86
- Saving the user data 86
- Loading the user data 86

Setup Card Operations
- Setup Card Handling 87
- Setup Card Data Operations 88

Cassettes
- Inserting and Ejecting Cassettes 93
- Preventing Accidental Erasure 94

Recording
- Basic Procedures 95
- Successive Shooting 98

Playback—Checking Recorded Contents
- Rec Review 100
- Color Playback 100

Connection With an External VTR 101
Recording Simultaneously with the Internal VTR and an External VTR 102
Recording With an External VTR Instead of the Internal VTR
- Using the 26-pin/12-pin Output Adaptor 104

RET Button 106
Replacing the Backup Battery 107
Setting Menu Screens 108
- MAIN menus 108
- MAIN menu screen 1 of 4 (SUB menus) 112

ROP (112), MATRIX (113), LOW SETTING (114), MID SETTING (115), HIGH SETTING (116), ADDITIONAL DTL (117), SKIN TONE DTL (118), KNEE/LEVEL (119), FLARE/GAMMA (120), CAMERA SETTING (120)

- MAIN menu screen 2 of 4 (SUB menus) 121

VF DISPLAY (121), VF INDICATOR (123), CAMERA ID (124), SHUTTER SPEED (124), SYNCHRO SCAN (125), !LED (125), CAMERA SW MODE (126), SUPER GAIN (127), VTR FUNCTION (128), BATT/TAPE ALARM (130)

- MAIN menu screen 3 of 4 (SUB menus) 131

CARD READ/WRITE (131), CARD R/W SELECT (132), REC (ASPECT)/PB/RET (133), MIC/AUDIO (134), GENLOCK/IRIS (136), VIDEO OUT (137), TIME/DATE (137), LENS SEL/ADJ (137)

- MAIN menu screen 4 of 4 (SUB menus) 138

USER MENU SEL 1 of 3 (138), USER MENU SEL 2 of 3 (139), USER MENU SEL 3 of 3 (140), AUTO SHADING (141), EVALUATION (141), INITIALIZE (146), DIAGNOSTIC (146)

- REMOTE menu screen 147

REMOTE FUNCTION (147), VF IND. (REMOTE) (147), !LED (REMOTE) (148), TALLY/RET (REMOTE) (148)

Warning System 149
Emergency eject 151
Error Codes 151
Maintenance
- Condensation 152
- Cleaning the Video Heads 152
- Cleaning the Viewfinder 152
- Characteristic Phenomenon of CCD Cameras 152

Inspections Before Shooting
- Inspection Preparations 153
- Inspecting the Camera Section 153
- Inspecting the Viewfinder 154
- Inspecting the Iris and Zoom Functions 155
- Inspecting the VTR Section 155

Specifications
- General 157
- Camera Section 157
- Viewfinder 157
- VTR Section 158
- Accessories 158
- Related Components 159

General and Features

This unit combines as a single integrated unit a 3-CCD color video camera which features IT-CCDs and a 520,000-pixel on-chip lens, and a DVCPRO format VTR which incorporates compression technology.
Not only can the screen aspect ratio be switched between 16:9 and 4:3 in a single action but the rate at which the signals are recorded onto the VTR tape can also be set to 50 Mbps for a higher picture quality or 25 Mbps for a longer recording duration. Recording at the 50 Mbps rate enables pictures with a very high picture quality to be recorded: this means that this is an integrated VTR unit which provides all the optimum functions and performance for EFP applications.
The unit in itself is compact and lightweight, its power consumption is minimal, it yields a high picture quality, and it offers excellent sensitivity, mobility and dust-proof and damp-proof capability. These features make it possible for the unit to be used in ENG applications as well.
Both the camera unit and VTR unit feature digital signal processing to achieve much higher levels of picture quality and stability.
Memory cards complying with global standards can be used for the camera and VTR setting data to provide a system to manage the data.

Features of the Camera Section

The camera section of the AJ-SDC915 has the following features.
- High sensitivity: 2000 lux (F13)
- High S/N ratio: 63 dB (standard)
- Ultra-low smear
- Ultra-low flare

Digital signal processing
Signal processing is digitized by a 18 MHz (typ.) 10-bit AD/DA converter. This improves picture quality, stability and reliability, and allows the viewfinder screen displays as well as numerous adjustment and setup items to be converted to menus.

Setting menu
The setting menu is displayed on the viewfinder screen, and controls the status displays, messages, marker displays, etc. Whether or not to display each item, as well as the display conditions when items are to be displayed, can be selected according to the user's convenience. For example, display ON/OFF for the ! lamp display which informs the user that the unit has entered irregular status can be selected for 8 different conditions.
The setting menu is also used to select various settings and functions and execute memory card operations, etc.

Setup cards
Setting menu and subject data can be stored on SRAM memory cards with a capacity of 64 kilobytes or greater which conform to PCMCIA standard ratings as setup cards. Stored data can be saved individually or according to the shooting conditions, allowing the same setup conditions to be easily reproduced and assisting in standardizing setup conditions between individual data.
An ATA flash memory card with a memory size of 4 MB or more is required to operate the Picture Link (Pix Link) function sold as an optional accessory.

High-function electronic shutter
Using the built-in electronic shutter achieves steady images even of quickly moving subjects. In addition, the following special operation modes can also be selected.
- Synchro scan mode: This mode is suited for shooting personal computer and workstation monitor screens (60.8–250 Hz), and provides images with little horizontal stripe noise.
- High vertical resolution (Super V) mode: This mode provides images with high vertical resolution compared to standard mode.

Wide range of video gain selections
Gain values can be selected from −3 dB to +30 dB using the setting menu and the GAIN switch. The high S/N ratio allows images with little noise to be obtained even when the gain is increased for shooting in dark locations. Using the SUPER GAIN switch provided specially to implement the super gain function, the video gain can be set to 30 or 36 dB.

Automatic adjustment and memory functions for black balance/white balance
The black set, black balance and white balance can be automatically adjusted by simple switch operations. Adjustment values are held in the memory even if the power for the unit is turned off, so there is no need to readjust the balance each time the power is turned on.
There are two memory systems for white balance which can hold four adjustment values each for the CC and ND filters, making a total of eight adjustment values. When adjustment values matching the illumination conditions are selected from among the values stored in the memory, the unit is automatically adjusted to the corresponding white balance. (A menu setting also allows adjustment of only two values instead of the values for each filter.) In addition, when the unit is shipped from the factory, the white balance value for 3200K is stored in the memory as a preset value. This value can be called when there is no time to adjust the white balance, etc.

Character display function
The unit is equipped with a function that displays switch settings, the automatic adjustment status for black balance and white balance, warning displays, etc. on the viewfinder screen.
In addition, when using an Anton Bauer Digital Magnum series battery as the unit's power supply, the remaining battery level can be displayed numerically on the viewfinder screen.

Warning system for displaying the VTR section status
The unit informs of VTR trouble, the end of the tape, battery wear, etc. with various warning lamps and a warning tone. The remaining tape time can also be checked by the character display inside the viewfinder.

Four filter disks as standard equipment
CC (color temperature conversion) and ND (neutral density) filters are provided as standard equipment. This allows the optional filter setting to be selected from among four combinations in accordance with the brightness of the subject.

Fine adjustment of the automatic iris reference value
The reference value for automatic iris adjustment can be finely adjusted by setting menu operations.

Auto close function
The unit is equipped with an auto close function which automatically closes the lens in the following cases.
- When the black balance is automatically adjusted.
- When the power is turned off in the auto iris mode.

Generation of SMPTE/SNG color bar and reference audio signals
The camera section contains a circuit which generates an SMPTE type color bar signal to facilitate color monitor adjustments, and a circuit which generates a reference level audio signal to facilitate audio level adjustments.
The unit also contains a circuit for generating SNG color bar signals which come in handy for sending signals to communication satellites.

Functions and circuits for assuring high picture quality
The AJ-SDC915 is equipped with the following functions (and circuits) in order to assure high picture quality and is designed to make the fullest use of the advantages of the high-performance CCD.
- A built-in AUTO KNEE circuit achieves a wide dynamic range which allows large signals to pass through.
- A built-in 2-line image enhancer
- A built-in shading compensation function for use with a lens extender
- A built-in sawtooth wave generator for adjustments
- A zebra pattern ON/OFF selector switch which selects three types of zebra patterns including spot zebra from two levels of zebra patterns.

Audio functions

- A phantom power supply type super-cardioid microphone (option) can be attached and it can also be detached from the main unit for use in interviews.
- Microphone can also be connected, and can be attached to the main unit using the AJ-MH700P microphone holder (option).
- The audio CH1 recording level can be easily adjusted at the front panel of the unit.

Recording by an external VTR

When an external VTR is connected using the 26-pin/12-pin output adaptor (option, AJ-YA900P), recording can be performed by the external VTR instead of the internal VTR.

Remote control

Connecting the Extension Control Unit (option, AJ-EC3) allows a portion of the camera section functions to be operated by remote control.

Features of the VTR Section

Digital system
The VTR section features a component digital recording system that employs the latest compression technology and non-compressed PCM recording for audio. This system provides superior S/N, frequency band and waveform characteristics as well as reproduction of detailed areas, etc., and realizes even higher picture and sound quality.
One of the following 4 modes can be selected for conducting recording and playback: 16:9 (50 Mbps), 4:3 (50 Mbps), 16:9 (25 Mbps) and 4:3 (25 Mbps).

Rec review function
By automatically rewinding and playing back the last two to ten seconds or so of the recording, this function enables what has been recorded to be promptly checked out.

Playback function
This function enables the playback picture (black-and-white picture) to be seen on the viewfinder screen. In addition, color playback pictures can be output from the unit's VIDEO OUT connector.

Built-in time code generator/reader
Time code information can be recorded and played back on a dedicated subcode track.

Locking of the time code to an external source
The built-in time code generator can be locked to an external generator. Also, the built-in time code generator uses a lithium battery as its back-up power supply, allowing time codes to be backed up for approximately one year even if power is not supplied to the unit.

Built-in DOLBY NR System*
A Dolby B Noise Reduction System is built in for audio recording in the longitudinal direction.

Successive shooting
Images can be shot successively within an accuracy of 0–+1 frame simply by pressing the VTR START button or the lens VTR button.

*Dolby noise reduction manufactured under license from Dolby Laboratories Licensing Corporation.
"Dolby" and the double-D symbol DD are trademarks of Dolby Laboratories Licensing Corporation.

System Configuration

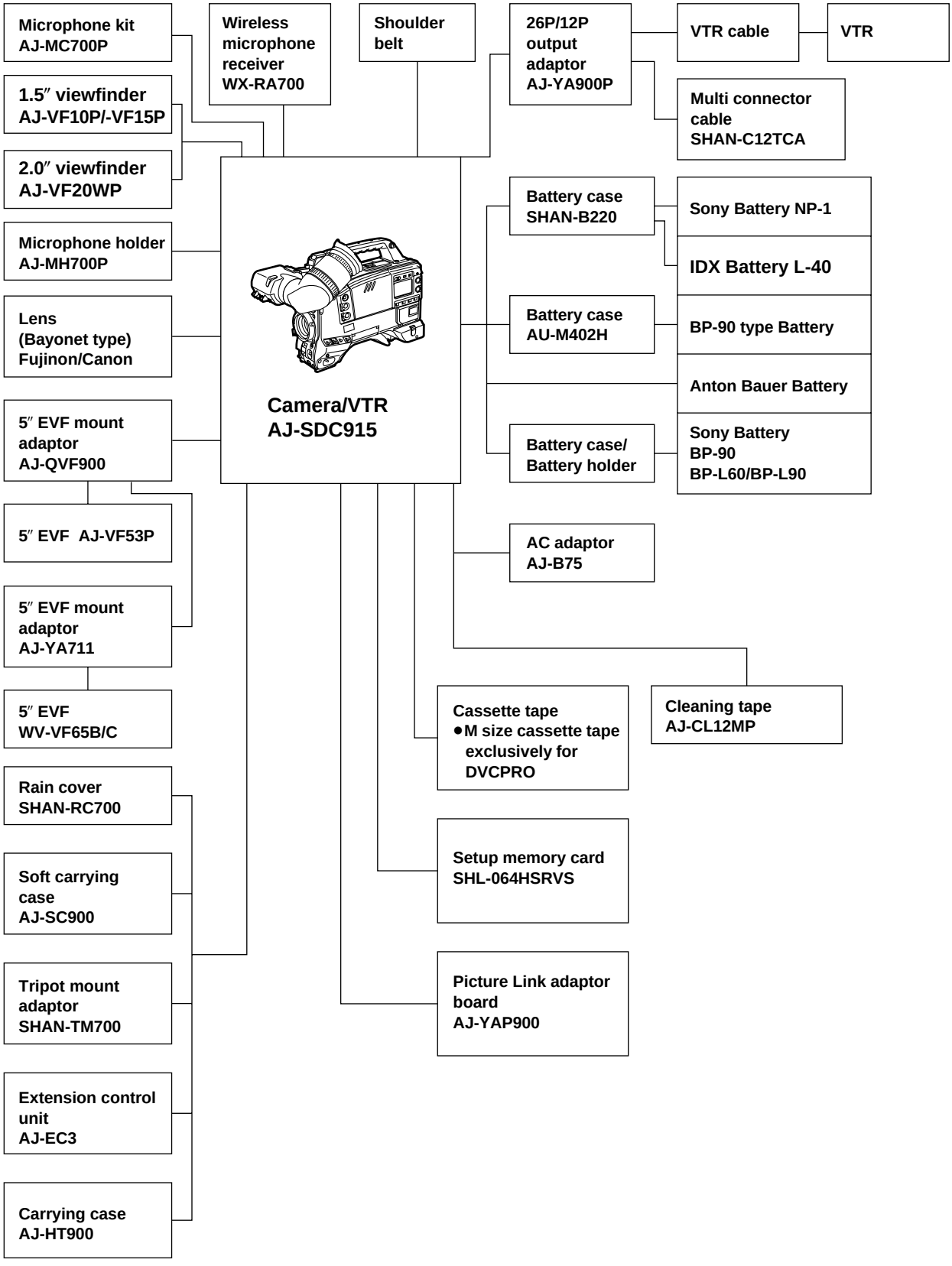

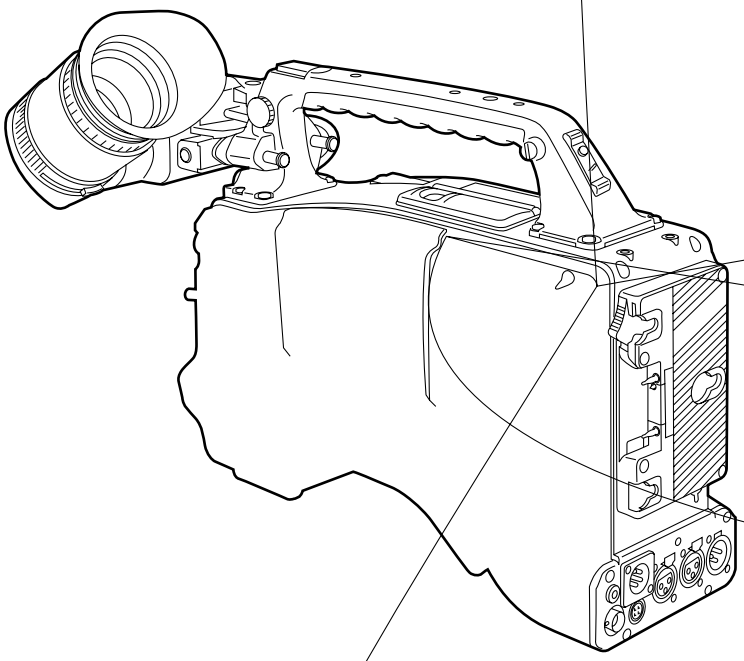

Power Supply Section

❶ **Battery holder**
The battery pack (option) made by Anton Bauer is mounted onto this holder.

❷ **DC IN (external power input) connector (XLR, 4P)**
The AJ-B75 AC adaptor (option) is plugged into this socket when the unit is to be operated by AC power. An external battery is plugged in when an external battery is to be used to operate the unit.

❸ **BREAKER (circuit breaker) button**
In order to protect the equipment, the circuit breaker is tripped and the power is automatically turned off when an excessively high level of power flows inside. Upon completion of the internal inspection and adjustments, push this button back in. The power will come back on provided that there is no trouble inside the unit.

❹ **POWER switch**
ON: Set to this position to turn on the unit's power.
OFF: Set to this position to turn off the unit's power.

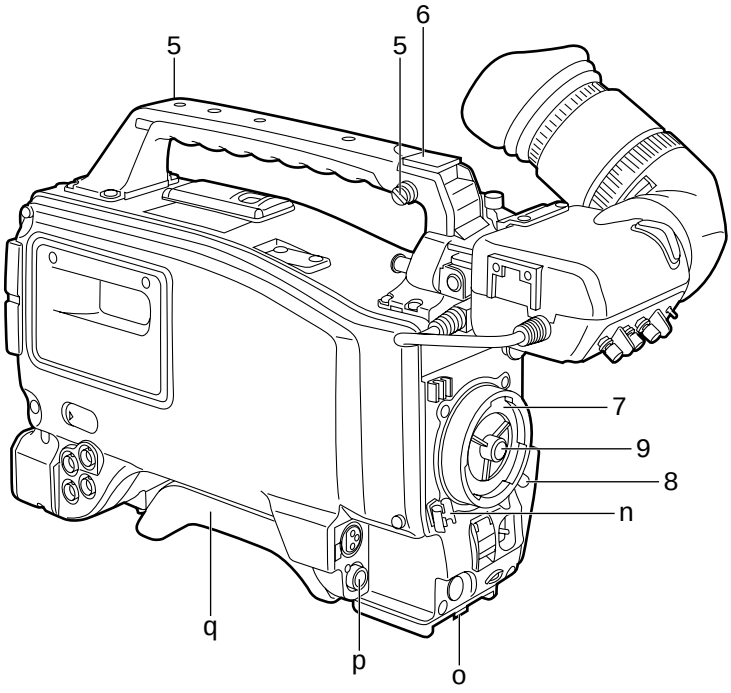

Accessory Mounting Section

❺ **Hook for mounting shoulder belt**
Attach the accessory shoulder belt to this hook.

❻ **Light shoe**
Mount the video light, etc. onto this shoe.

❼ **Lens mount (bayonet type)**
Mount the lens here.

❽ **Lens clamping lever**
Insert the lens into the lens mount ❼, and turn the lens mount ring using this lever to clamp the lens.

❾ **Lens mount cap**
Press up the lens clamping lever ❽ to remove this cap. Keep the cap in place if the lens is not going to be mounted.

❿ **Lens cable clamp**
This is for clamping the lens cable.

⓫ **Tripod mount**
When the unit is to be secured to a tripod, mount the tripod attachment (SHAN-TM700) which is available as an optional accessory.

⓬ **LENS connector (12-pin)**
Hook up the lens connecting cable to this connector. Consult with your dealer concerning the lens which you are going to use.

⓭ **Shoulder pad**
Adjust this pad to facilitate operation when carrying the unit on your shoulder. Its position can be brought forward or backward and adjusted by loosening the two set screws.

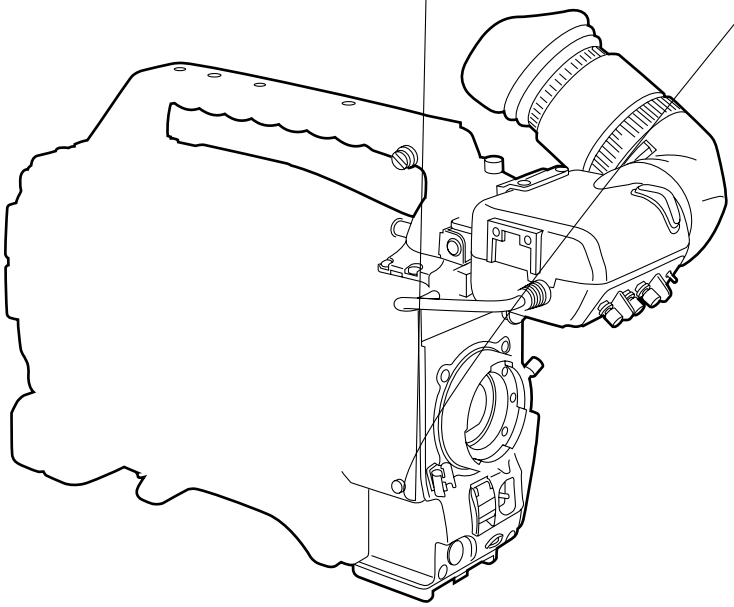

Audio Function Section (1)

⓮ AUDIO LEVEL CH1 (audio channel 1 recording level) control
When the AUDIO SELECT CH1/CH2 switch ⓱ is set to MAN, the recording level of audio channel 1 can be adjusted by this control in addition to the AUDIO LEVEL CH1 control ⓰ on the side panel.

⓯ MIC IN (microphone input) jack (XLR, 3-pin)
Connect an optional microphone to this jack. The power for the microphone is supplied from this jack.

⓰ AUDIO LEVEL CH1/CH2 (audio channel 1/2 recording level) controls
When the AUDIO SELECT CH1/CH2 switch is set to MAN, the audio level of audio channels 1 and 2 can be adjusted using these controls.
However, the audio CH1 level can also be adjusted using the AUDIO LEVEL CH1 control ⓮ on the front panel.

⓱ AUDIO SELECT CH1/CH2 switch (audio channel 1/2 auto/manual level adjustment selector) switch
This selects the method used to adjust the audio levels of audio channels 1 and 2.
AUTO: For adjusting the levels automatically.
MAN: For adjusting the levels manually.

⓲ AUDIO IN (audio input selector) switch
This selects the signals to be recorded on audio channels 1 and 2.
FRONT [MIC]: The microphone input signals connected to the MIC IN jack ⓯ are recorded.
REAR [MIC]: The microphone input signals connected to the AUDIO IN CH1/CH2 connectors ㉑ are recorded.
REAR [LINE]: The line input signals connected to the AUDIO IN CH1/CH2 connectors ㉑ are recorded.

⓳ REAR MIC POWER switch
ON: The phantom power is supplied to the rear microphone.
OFF: The phantom power is not supplied to the rear microphone.

⓴ CUE switch
CH1: The audio CH1 signals are recorded on the cue track.
1/2: The signals of audio CH1 and CH2 are mixed together and recorded on the cue track.
CH2: The audio CH2 signals are recorded on the cue track.

㉑ AUDIO IN CH1/CH2 (audio input channel 1/2) connectors (XLR, 3P)
An audio component or microphone is connected here.

㉒ AUDIO OUT connector (XLR, 3P)
This is connected to an audio component. The audio channels are coupled to the MONITOR SELECT switch ㉗ and switched in tandem.

㉓ DC OUT (DC power output) connector
This is the DC 12 V output connector. A current of approximately 100 mA can be taken out.

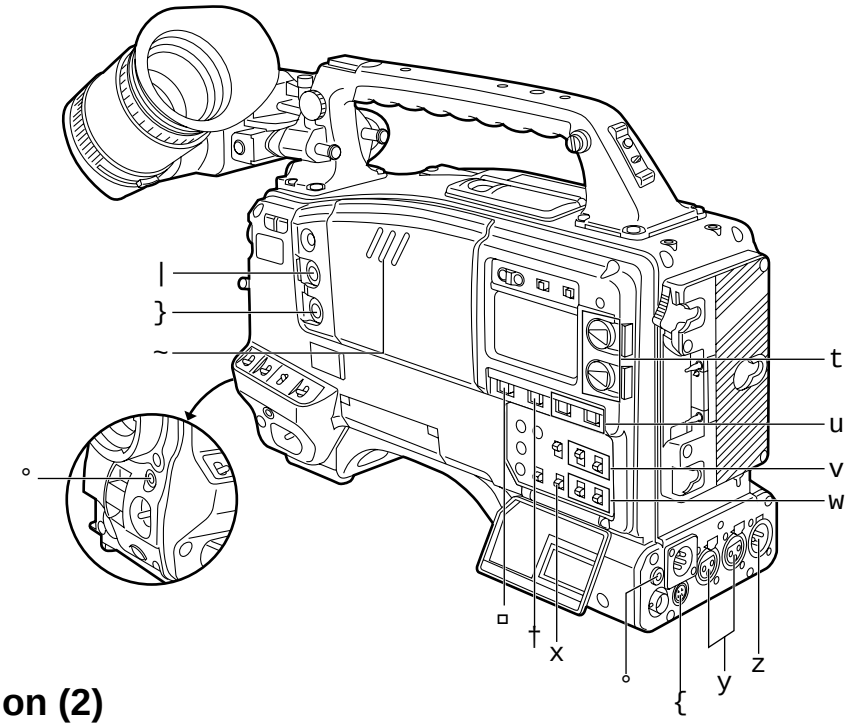

Audio Function Section (2)

㉔ ALARM (warning tone volume) control
This adjusts the warning tone volume heard from the speaker ㉖ or the earphone connected to the PHONES jack ㉙. When it is set to the lowest position, the warning tone is not audible. However, by making changes to the inside parts, the tone can be made audible even when the control is at its lowest position.

㉕ MONITOR (volume) control
This adjusts the volume of the sound other than the warning tone—the sound from the speaker ㉖ or earphone ㉙. When it is set to the lowest position, no sound is heard.

Audio Function Section (3)

㉖ Speaker
During recording, the EE sound can be monitored; during playback, the playback sound can be monitored.
The warning tone is heard through the speaker in synchronization with the flashing or lighting of the warning lamp and warning display.
The speaker sound is automatically muted when an earphone is connected to the PHONES jack ㉙.

㉗ MONITOR SELECT (audio channel selector) switch
This selects the audio channel whose sound is to be heard through the speaker ㉖ AUDIO OUT connector ㉒, or earphone.
CH1: The audio channel 1 sound is output.
1/2: The sound produced by mixing the audio channel 1 and 2 sound or the stereo sound is output. However, only the mixed sound is output from the speaker ㉖ and AUDIO OUT connector ㉒.
CH2: The audio channel 2 sound is output.

㉘ MONITOR (sound selector) switch
This selects the sound of the earphone when 1/2 is selected with the MONITOR SELECT switch ㉗.
ST: The stereo sound of audio channels 1 and 2 is output.
MIX: The mixed sound of audio channels 1 and 2 is output.

㉙ PHONES (earphone) jack (mini-jack)
When an earphone (option) is connected to this jack, the sound selected by the MONITOR switch ㉘ can be heard. The warning tones relating to the unit's operation or status can also be heard. An earphone enabling a sufficiently high volume of sound to be heard is recommended. When the earphone is connected, speaker ㉖ sound is automatically muted.

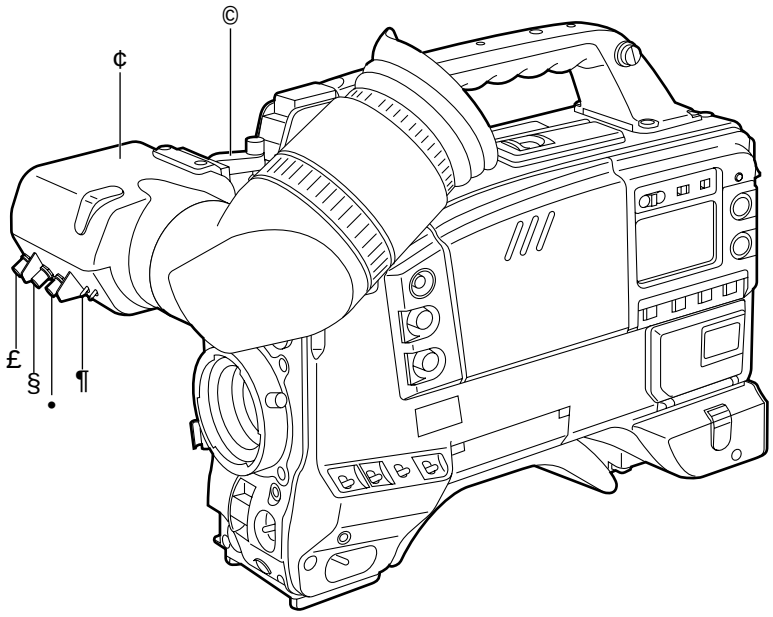

(The viewfinder shown in the illustration is the AJ-VF10P.)

Shooting (Recording)/Playback Function Section (1)

㉚ Viewfinder (optional accessory)
Black-and-white images can be seen in the viewfinder during recording and playback. Warnings and messages relating to the unit's operating status and settings, zebra pattern, markers (safety zone marker, center marker), etc. can also be seen.

㉛ PEAKING control
This is used to adjust the contours of the images inside the viewfinder to facilitate focusing. It does not affect the camera's output signals.

㉜ CONTRAST control
This is used to adjust the contrast of the screen inside the viewfinder. It does not affect the camera's output signals.

㉝ BRIGHT control
This is used to adjust the brightness of the screen inside the viewfinder. It does not affect the camera's output signals.

㉞ ZEBRA (zebra pattern) switch
This displays the zebra pattern inside the viewfinder.
ON: The zebra pattern is displayed.
OFF: The zebra pattern is not displayed.
When the unit is shipped from the factory, the zebra pattern is set in such a way that those parts with an IRE video level from approx. 70% to 85% are displayed. The displaying of parts with a level ranging from 50% to 110% or more or with a certain level can also be set on the setting menu.

㉟ Diopter control knob
This is adjusted in such a way that the images on the viewfinder screen are seen most clearly in accordance with the dioptric power of the camera's operator.

㊱ Eyepiece

㊲ Viewfinder forward-backward/left-right position clamp lever
Loosen this lever to adjust the position of the viewfinder ㉚ in the forward-backward or left-right direction.

㊳ Eyepiece forward-backward movement ring
Turn this ring to adjust the position of the eyepiece ㊱ in the forward-backward direction.

㊴ Viewfinder stopper screw
To detach the viewfinder ㉚ from the camera, loosen this screw and then detach the viewfinder.

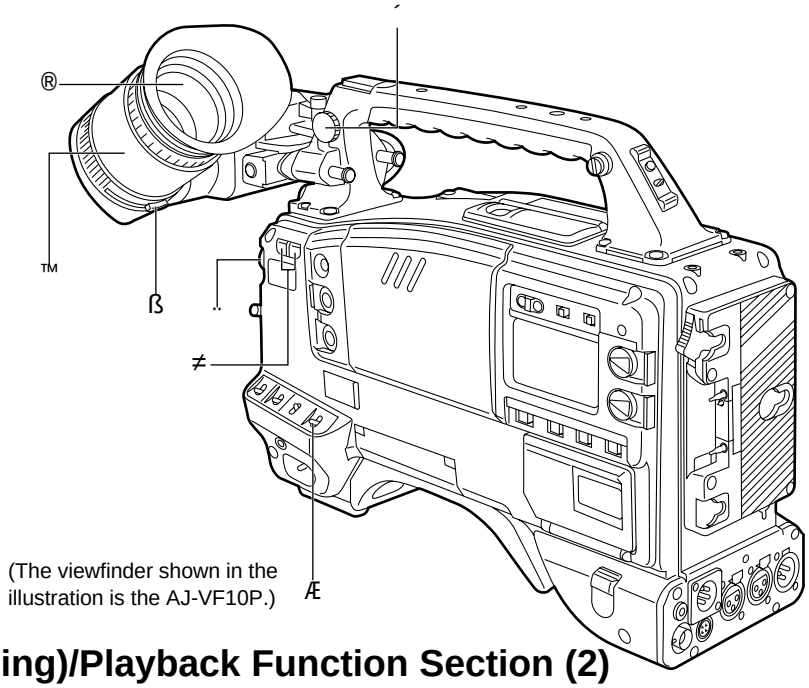

(The viewfinder shown in the illustration is the AJ-VF10P.)

Shooting (Recording)/Playback Function Section (2)

㊵ CC/ND FILTER (filter selector) knob

This selects the filter to match the light source which is illuminating the subject.
If the setting of this knob is changed when the menu display mode has been set to “3” (default setting), the new setting will appear on the setting change message display area of the viewfinder screen.

■ **The knob and filter settings are listed below.**

FILTER knob setting	Description
1	3200 K
2	5600 K+1/8ND
3	5600 K
4	5600 K+1/64ND

■ **Examples of filter settings to match shooting conditions**

Filter	Shooting condition
1	Sunrise, sunset, inside a studio
2	Outdoors under a clear sky
3	Outdoors under a cloudy or rainy sky
4	Snow scenes, high mountains, coastlines and other extremely clear and bright scenes

㊶ Synchro scan adjustment switches

These switches are used to adjust the synchro scan speed. Pressing the “−” switch reduces the shutter speed; pressing the “+” switch increases the shutter speed. Set these switches to a position where the side bar noise in the viewfinder is eliminated during personal computer monitor shooting, etc.

<**Note**>

When these switches are used for UB/TC/CTL settings while the SET position has been selected as the TCG switch position, they will not serve their function as synchro scan adjustment switches. The TCG switch must be set to F-RUN or R-RUN for these switches to serve their function.

㊷ WHITE BAL (white balance memory selector) switch

PRST: Set to this position when there is no time to adjust the white balance. The white balance value for 3200K is stored in the memory.

A or B: When the AUTO W/B BAL switch ㊺ is pressed to the AWB side, the white balance is automatically adjusted in accordance with the setting position of the filter knob ㊵, and the adjustment value is stored in memory A or memory B.

When the FILTER knob and the WHITE BAL switch are set to the same positions as the ones set when the adjustment was made, the adjustment value stored in the memory is called, and the unit is automatically adjusted to the white balance which corresponds to this value.
If the setting of this switch is changed when the menu display mode has been set to “3” (default setting), the new setting will appear at the WHITE BAL switch display position on the viewfinder screen. (Example: “A”)

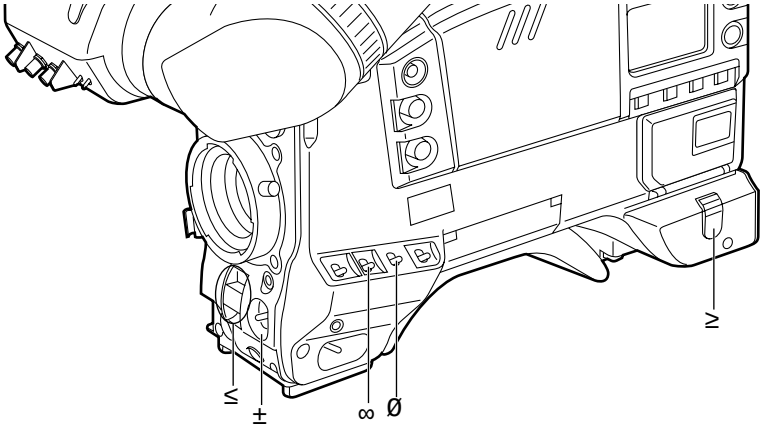

Shooting (Recording)/Playback Function Section (3)

㊸ OUTPUT (output signal selector)/AUTO KNEE switch

This switch selects the video signals which are to be output from the camera unit to the VTR unit, viewfinder and video monitor. The AUTO KNEE function can be used when the images shot by the camera have been selected.

■ **OUTPUT/AUTO KNEE switch setting positions**

BARS	Color bar signals are output. The AUTO KNEE circuit is not activated. Set the switch to this position in the following cases: ●When adjusting the video monitor ●When recording color bar signals
CAM, AUTO KNEE OFF	The images shot by the camera are output. The AUTO KNEE circuit is not activated. The default setting is “MANUAL KNEE”.
CAM, AUTO KNEE ON	The images shot by the camera are output. The AUTO KNEE circuit is activated.

㊹ GAIN (gain selector) switch

This is used to change the video amplifier’s gain in accordance with the lighting conditions during shooting. The gain values corresponding to the L, M and H settings are assigned beforehand on the setting menu. When the unit is shipped from the factory, these settings are: L=0 dB, M=9 dB and H=18 dB.

If the setting of this switch is changed when the display mode has been set to “3”, the new setting will appear at the gain display position on the viewfinder screen. (Example: “12 dB”)

㊺ AUTO W/B BAL (white balance/black balance automatic adjustment) switch

AWB: Set to this position for automatically adjusting the white balance. When the WHITE BAL switch ㊷ is now set to “A or B”, the adjusted value will be stored in memory A or memory B.

ABB: Set to this position for automatically adjusting the black balance. When this switch is held down for at least 10 seconds at the ABB position, the auto black shading will be compensated automatically.

㊻ SHUTTER switch

Set this to ON when using the electronic shutter. When it is pressed to the SEL side, the shutter speed and mode displays change in the ranges preset on the setting menu. If the setting of this switch is changed when the display mode has been set to “2” or “3”, the new setting will appear at the shutter display position on the viewfinder screen. (Example: “:1/250”, “:1/60.8”)

---

1) AUTO KNEE function

When the level is adjusted to people, scenes, etc. for shooting against a very bright background, the background will be whited out and the buildings or scenes in the background will become blurred. If the AUTO KNEE function is activated in cases like these, the background can be reproduced in clear detail. This function is especially effective for shooting in the following conditions:

●When shooting people in shade under a clear sky
●When simultaneously shooting people in vehicles or indoor and the outdoor scenery seen through the windows
●When shooting scenes with a high contrast

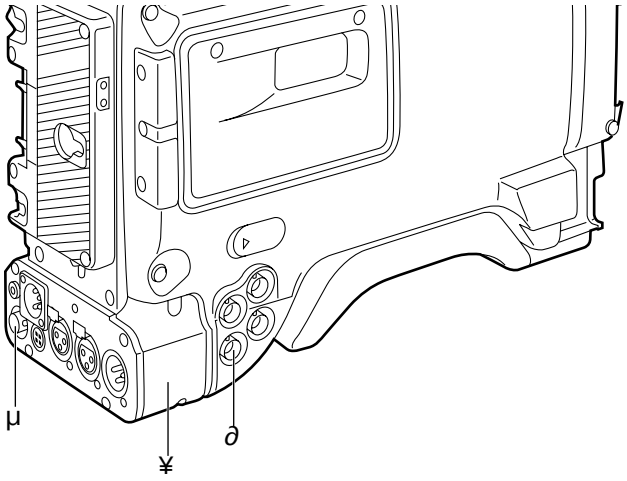

47 ECU REMOTE (remote control) connector (6-pin)
Connect the AJ-EC3 extension control unit (option) here.
<**Note**>
The POWER switches on unit and extension control unit must be set to OFF before the remote control cable is connected or disconnected.

48 26-pin/12-pin output adaptor (See page 104 for mounting method.)
The 26-pin/12-pin output adaptor AJ-YA900P (option) is mounted on this section. When the portable VTR is connected as the external VTR, recording can be performed simultaneously with the unit's built-in VTR.
Furthermore, by connecting the SHAN-C12TCA multi-connector cable (optional accessory) to the 12-pin connector, it is possible to output the sound of audio channels 1 and 2 separately.

49 VIDEO OUT connector (BNC)
This outputs the video signals (75Ω termination, rated level) to be monitored. During recording, EE images can be monitored; during playback, playback images can be monitored.
While performing settings on the menu, the setting menu can be superimposed onto the shot images appearing on the monitor screen so that the settings can also be checked.

50 CAM OUT (camera output) connector (BNC)
This outputs the composite video signals (75Ω termination, rated level). When a video monitor is connected, the images shot by the camera can be monitored. Even while the VTR is playing back, the camera's images are output at all times.

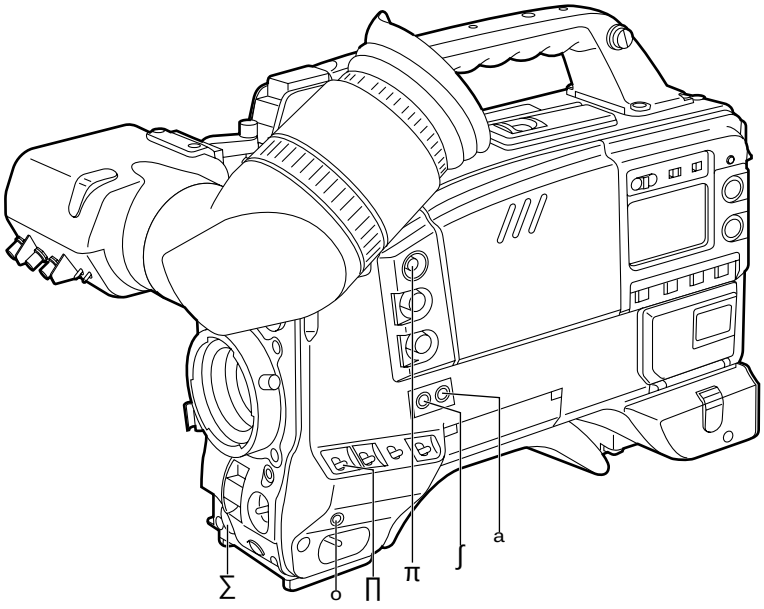

Shooting (Recording)/Playback Function Section (4)

51 VTR START button

When this pressed, recording commences; when it is pressed again, recording stops. This button has the same function as the VTR button on the lens side.

52 VTR SAVE/STBY (tape protection) switch

This selects the power supply status while the VTR recording is temporarily stopped (REC PAUSE).

SAVE: This is the tape protection mode. The cylinder is stopped in the half-loading status. Compared with the STBY position, less power is consumed and the unit can be operated longer using the battery. It takes longer for recording to commence after the VTR START button 51 is pressed in the SAVE position than in the STBY position.
When the switch is set to this position, the VTR SAVE lamp inside the viewfinder lights.

STBY: Recording commences immediately when the VTR START button is pressed.

<**Note**>
This unit will automatically go into SAVE mode when the designated time for standby (STBY) condition is exceeded. To return to standby mode, press the VTR SAVE/STBY switch once to select SAVE mode, then once again to return to STBY mode.

53 MODE CHECK button

While this button is kept depressed, the camera's setting status is displayed in the viewfinder. It does not affect the camera's output signals.

54 SUPER GAIN button (inside sliding cover)

The super gain mode is forcibly established when this button is pressed, and each time the button is pressed when all the super gain values have been set using "SUPER GAIN" on the MAIN menu 2 of 4 screen, the gain is switched by one level in the following sequence: 30 dB→36 dB→OFF→30 dB, etc. However, the DTL and other menu settings cannot be performed.

55 SUPER IRIS button (inside sliding cover)

This is used when backlight compensation (or the super black function*1) is to be provided. When it is pressed, the switch settings are displayed inside the viewfinder for 3 seconds. When it is pressed again, backlight compensation (or the super black function*1) is released.

*1**See Main Menu Screen 2 of 4 on page 126 for details on the super black function.**

Super gain: When 30 dB is allotted to the SUPER IRIS button, DTL and other menu settings cannot be performed for this 30 dB.

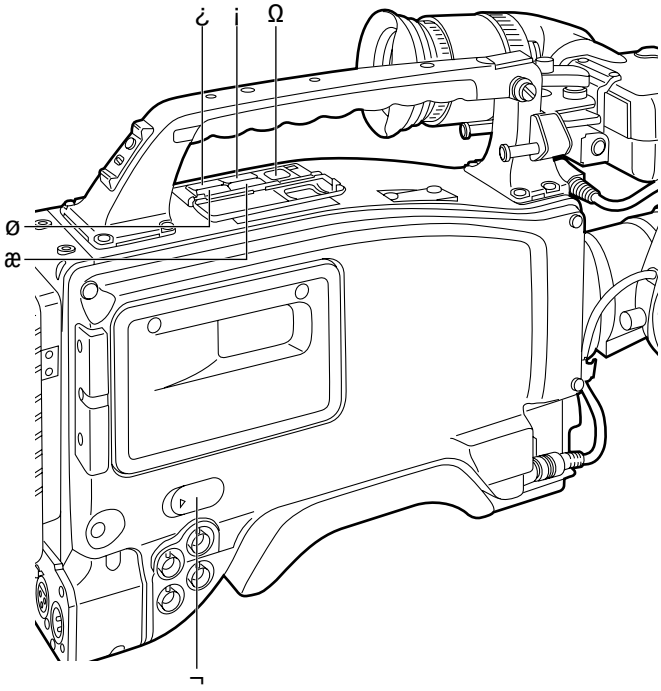

56 MARK button
This is used when the Picture Link (Pix Link)*1 function is to be used. Each time it is pressed M1 (MARK1), M2 (MARK2) or no display appears in the viewfinder.

***1Picture Link adaptor board (AJ-YAP900) is sold as an option.**

57 EJECT (cassette eject) button
Press this to insert or eject the cassette.

58 REW (rewind) button
Press this to rewind the tape. Its lamp lights during rewinding.
If this button is pressed during playback, the playback images are rewound at approximately quadruple speed while the button is held down.

59 FF (fast forward) button
Press this to fast forward the tape. Its lamp lights during fast forwarding.
If this button is pressed during playback, the playback images are fast forwarded at approximately quadruple speed while the button is held down.

60 PLAY/PAUSE button
Press this to view the playback images on the viewfinder screen or color video monitor. Its lamp lights during playback.
If this button is pressed again during playback, playback is paused and the lamp goes off. After playback has been paused for 2 minutes, the unit automatically switches to stop status (STOP).

61 STOP button
Press this to stop the tape travel.

62 EMERGENCY screw (inside the rubber cap)
For details, refer to the “emergency eject” function (on page 151).

ontrols unct

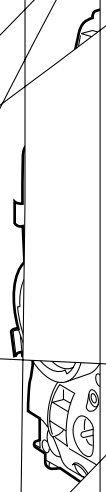

u O

ssed or to switch the setting betw and OFF.

utton

sed to decrement the setting of the ted on the setting menu by 1 level each pressed or to switch the setting and OFF.

tton

to select the setting men

n the camera section is to be

genlock operation or when th ed exte

an external video input conn VIDEO has been selected

menu.

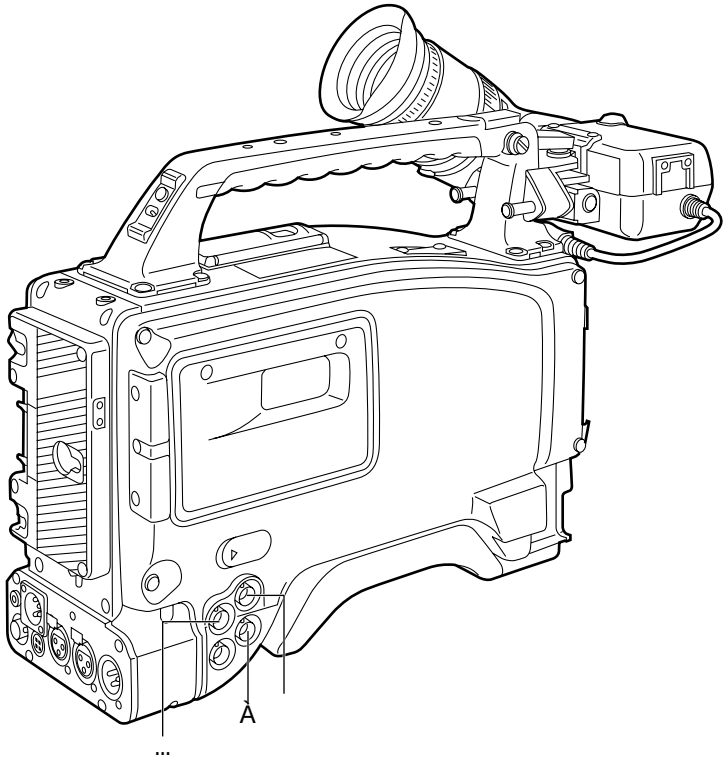

⑰⓪ TC IN connector (BNC):
The time code serving as the reference is input when the time code is locked to an external source.

⑰① TC OUT connector (BNC):
Connect this to the time code TC IN connector on the external VTR when locking the external VTR's time code to this unit's time code.

Time Code-Related Section (2)

⑰② HOLD button
The time data appearing on the counter display at the instant when this button is pressed is held. (The time code generator will still continue to run.) When the button is pressed again, the hold status is released. Use the button to ascertain the time at which a particular scene was shot, for example.

⑰③ RESET button
This resets the time data on the counter display to "00:00:00:00". When the TCG switch ⑰⑦ is set to SET and this button is pressed, the time code or user's bit can be reset to "00:00:00:00" or "00 00 00 00".

⑰④ DISPLAY switch
The time code, CTL or user's bit is made to appear on the counter display depending on the setting positions of this switch and the TCG switch ⑰⑦.
UB: The user's bit is displayed.
TC: The time code is displayed.
CTL: CTL is displayed.

⑰⑤ UP button, DOWN button
When setting the time code or user's bit, these buttons increment or decrement by 1 the figure of the digit made to flash by the SHIFT/ITEM button ⑰⑥.

⑰⑥ SHIFT/ITEM (digit advance) button
When setting the time code or user's bit, this button is used to cause the digit which is to be set to flash.

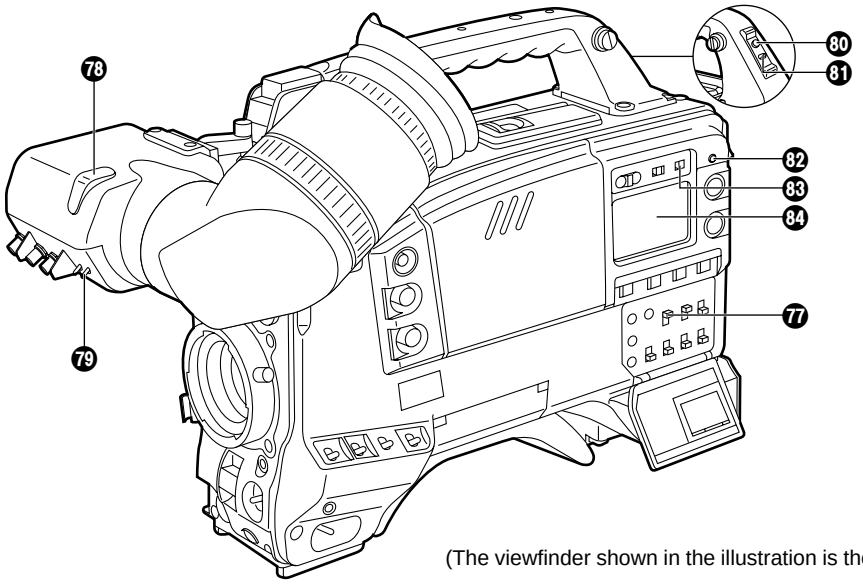

(The viewfinder shown in the illustration is the AJ-VF10P.)

77 TCG (time code selector) switch
This is used to set the running mode of the internal time code generator.
F-RUN: This position is used when the time code is to be advanced continuously regardless of the VTR's operation.
Set to this position when aligning the time code with the actual time or locking the time code to an external source.
SET: This position is used for setting the time code or user's bit.
R-RUN: This position is used when the time code is to be advanced only while recording is in progress. The time code will be recorded continuously on a tape with a succession of unedited shots.

Warning/Status Display Section

78 Tally lamp
This is activated when the TALLY switch 79 is at HIGH or LOW, and it lights during recording by the VTR section. It flashes in the same way as the REC lamp inside the viewfinder to warn the operator. The brightness when lighted can be selected using the TALLY switch (HIGH or LOW).

79 TALLY switch
This controls the tally lamp 78.
HIGH: The tally lamp is made brighter.
OFF: The tally lamp is extinguished.
LOW: The tally lamp is made darker.

80 Back tally lamp
This functions in the same way as the tally lamp 78 when the back tally switch 81 is set to ON.

81 Back tally switch
This controls the back tally lamp 80.
ON: The back tally lamp operates.
OFF: The back tally lamp does not operate.

82 WARNING lamp
This flashes or lights when trouble occurs in the VTR section.

83 LIGHT switch
ON: This illuminates the display window 84.
OFF: This extinguishes the display window illumination.

84 Display window
The warnings related to the VTR section, remaining battery level, sound level, time data, etc. are displayed in this window.

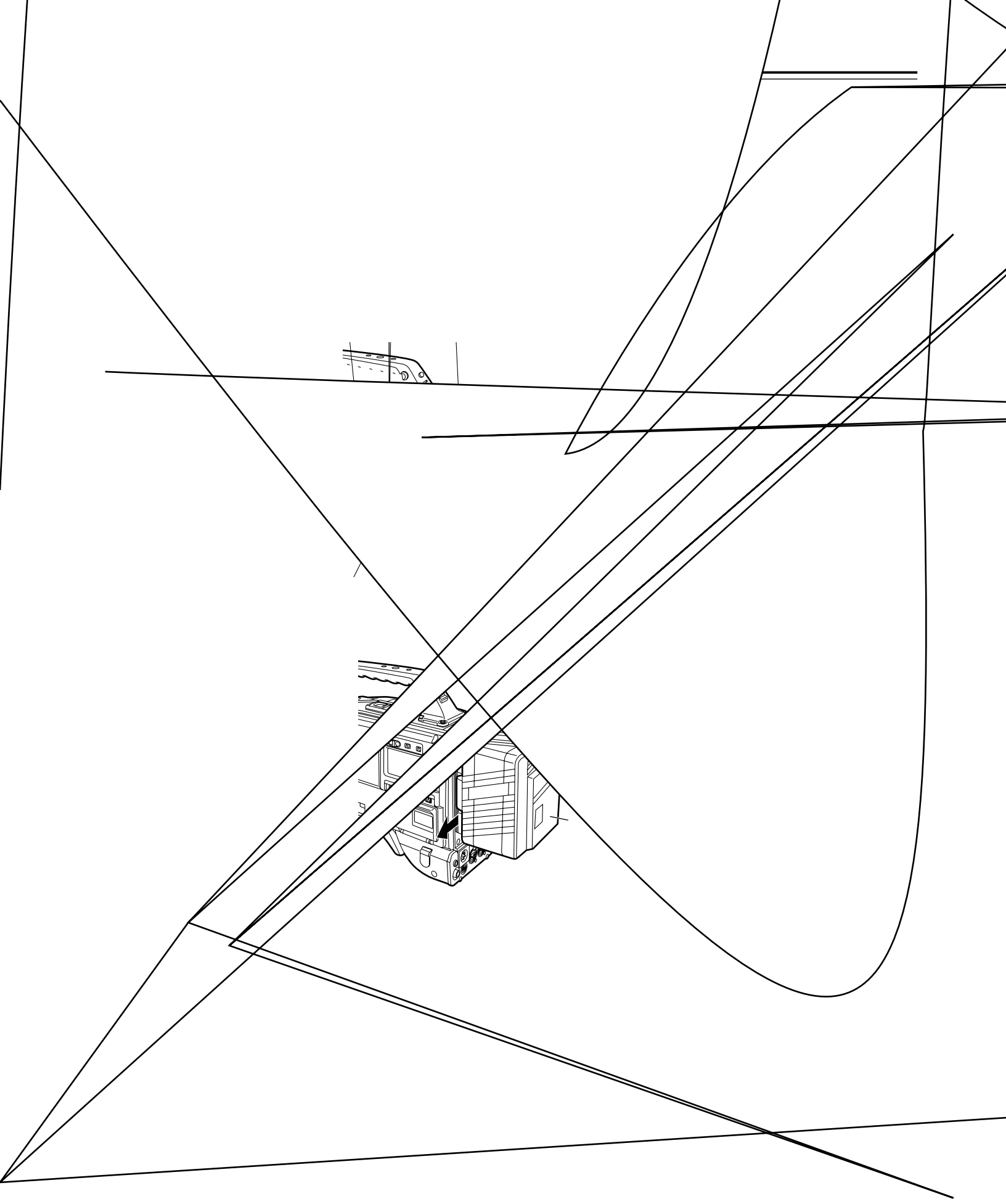

Using the BP-90 type Battery Pack

1 Detach the battery mounts.

2 Connect the unit's connectors with the connectors of the AU-M4

3 Mount the AU-
Open the ba
screws w
comple

4 Connect the battery pack plug to the connector inside the case and insert the battery pack.

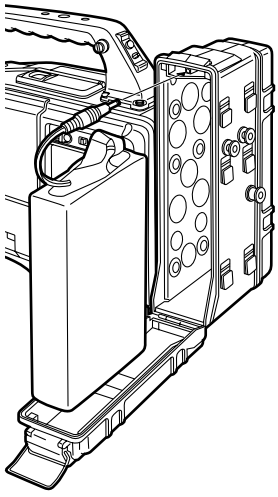

<**Note**>
The unit's power must be set to OFF before the plug is inserted or removed.

Using a Sony Battery Pack

1 Remove the battery mounts.
See page 24.

2 Mount the accessory battery mounting connector.

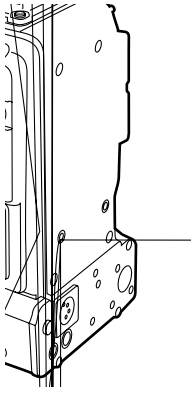

3 Mount the Sony battery holder.
Mount the battery case with the cover detached first, and then mount the detached cover as shown in the figure.
① Tighten the mounting screws.
② Tighten the power supply contact screws.
③ Insert the top of the detached cover in the direction of the arrow.
④ Align the hole at the bottom (metal part) of the cover with the hole at the bottom of the case and mount the cover to the battery mounting connector with the screw of the battery holder.

<**Note**>
Take care when attaching the battery holder that the wires are not pinched.①③④②

Using the Sony BP-90 Battery Pack

1 Mount the accessory battery mounting connector.
(See the preceding page.)

2 Mount the BP-90 battery case.
① Tighten the mounting screws.
② Tichten the power supply contact screws.
③ Insert the top of the detached cover in the direction of the arrow.
④ Align the hole at the bottom (metal part) of the cover with the bottom of the case and mount the cover to the battery mounting connector with the screw.

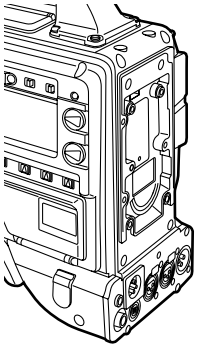

Using the Sony BP-L60/BP-L90 lithium-ion Battery Pack

1 Attach the supplied battery mounting terminals.

2 Attach the lithium-ion battery holder.
① As shown in the figure, remove the battery clamp, and attach the holder using the mounting screws.
② Tighten the power supply contact screws.
③ Put the battery clamp back into place.

<**Notes**>
- The unit's power must be set to OFF before the plug is inserted or removed.
- Take care when attaching the battery case/battery holder that the wires are not pinched.

Using an AC Power Supply (When Using the AJ-B75 AC Adaptor)

1 Connect the unit's EXT DC IN socket with the DC OUT connector of the AJ-B75 AC adaptor.

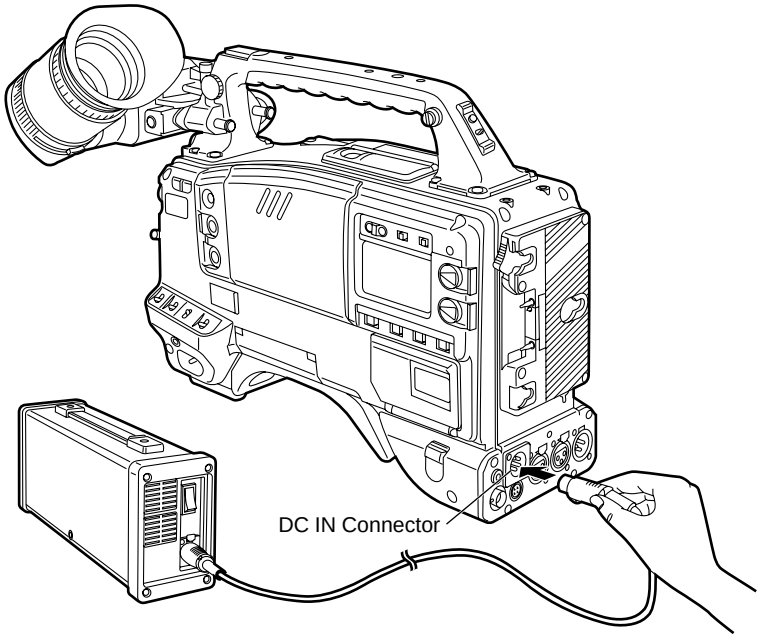

2 Set the AC adaptor's power to ON.

3 Set the unit's power switch to ON.

<**Notes**>

- When using an external power supply other than the AJ-B75 AC adaptor, check the pin signal of the EXT DC IN socket.
- When both a battery pack and AC adaptor are connected, power is supplied from the AC adaptor.
- When using an AC adaptor, the AC adaptor's power must be set to ON before the unit's POWER switch is set to ON. If this sequence is reversed, the AC adaptor's output voltage will rise slowly and may cause the unit to malfunction.

Pin No.	Signal
1	GND
2, 3	——
4	+12 V

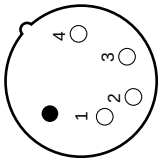

Checking and Selecting the Type of Battery

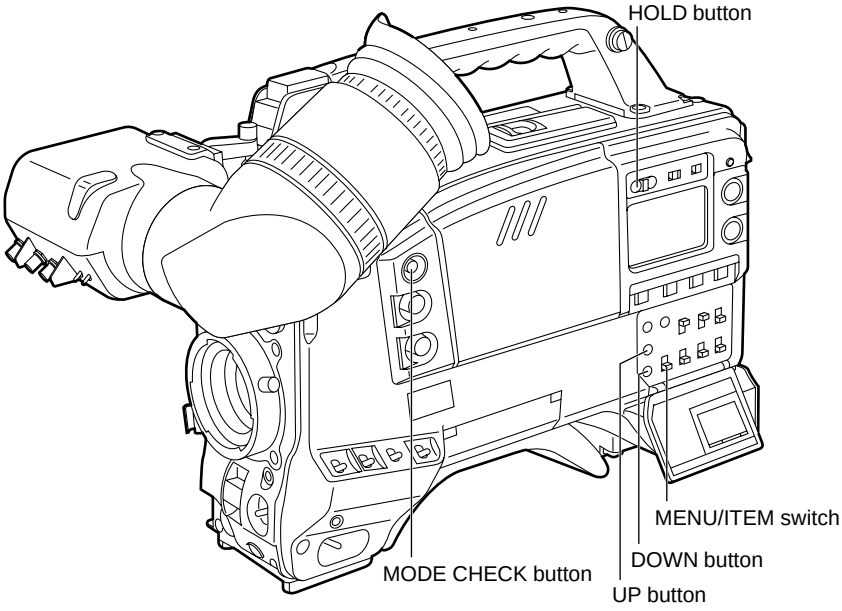

To check the type of battery

1 Press the MODE CHECK button.
While this button is held down, the type of battery is displayed in the remaining battery charge display area.

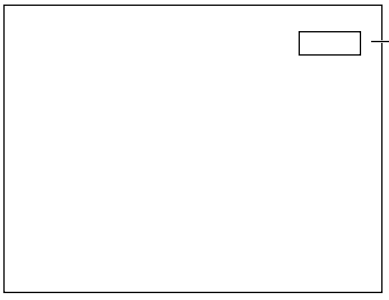

The type of battery is displayed here.
NiCd12
NiCd13
NiCd14
IDX L-40
L-60
L-90
ANTON-D
IDX-D

Display seen inside the viewfinder

To select the type of battery

1 When the MENU SET/OFF switch is set to SET while the HOLD button is pressed, the battery selection menu appears on the screen.

2 Press the SHIFT/ITEM button, and move the arrow (cursor) to BATTERY SEL.

3 Press the UP or DOWN button to select the type of battery.

```
→< MASTER GAIN >
  LOW GAIN     : 0dB
  MID GAIN     : 9dB
  HIGH GAIN    :18dB

 < BATTERY SELECT >
  BATTERY SEL  :NiCd12

 < COLOR BAR SELECT >
  COLOR BAR    :SMPTE
```

The type of battery is displayed here.

NiCd12	L-60
NiCd13	L-90
NiCd14	ANTON-D
IDX L-40	IDX-D

Display seen inside the viewfinder

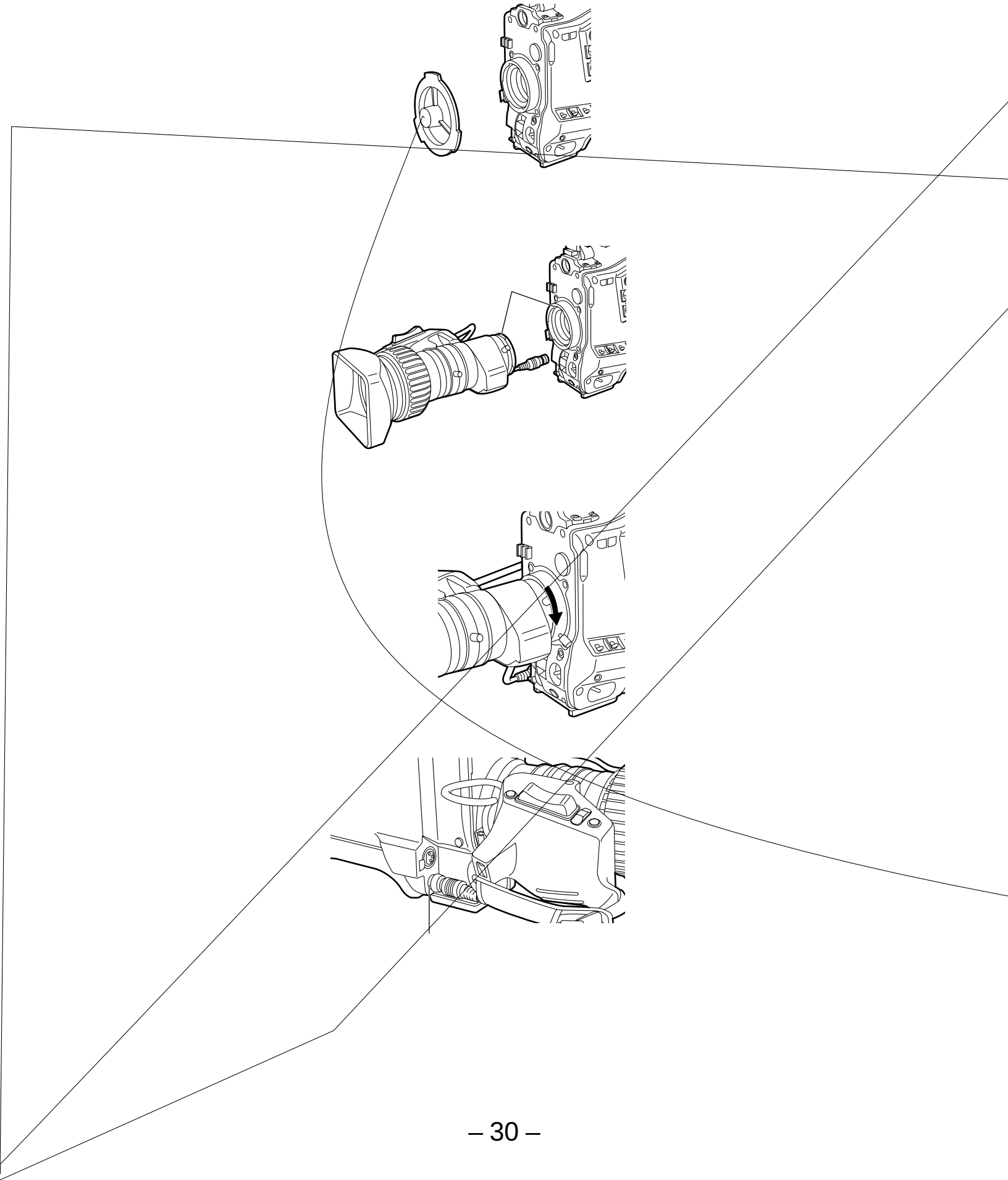

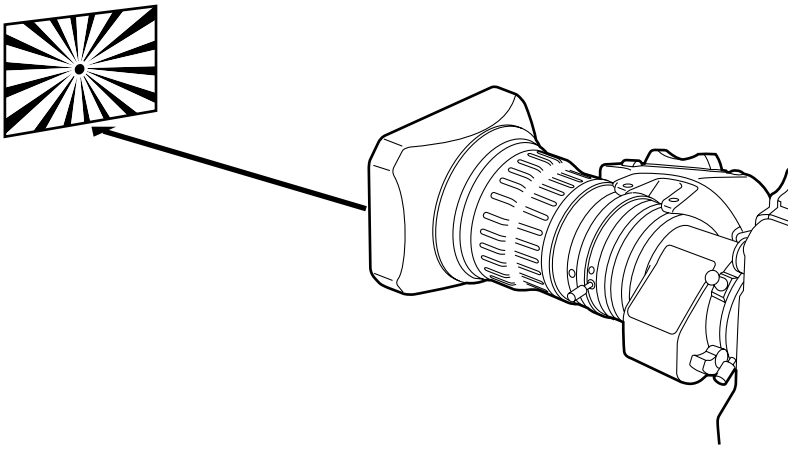

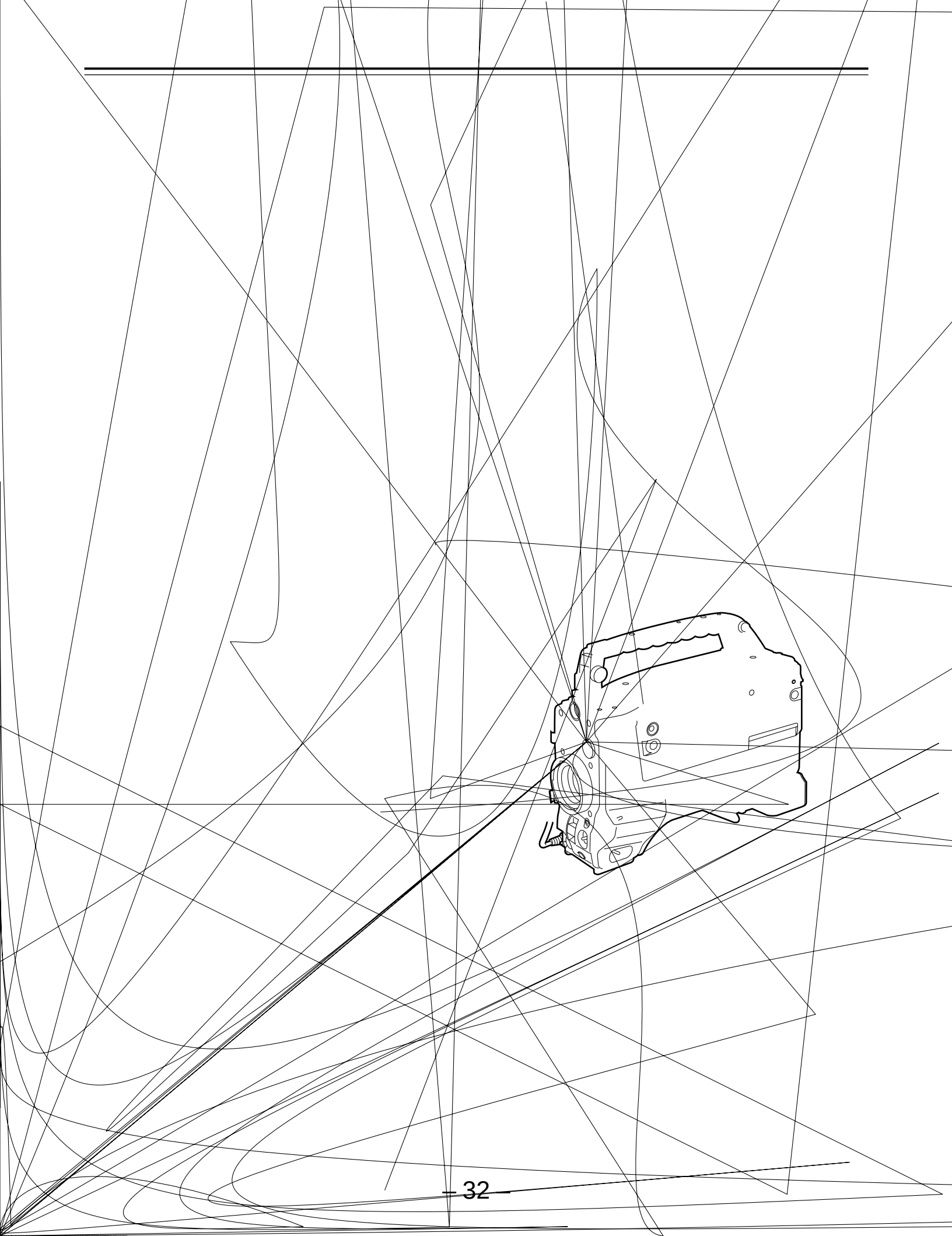

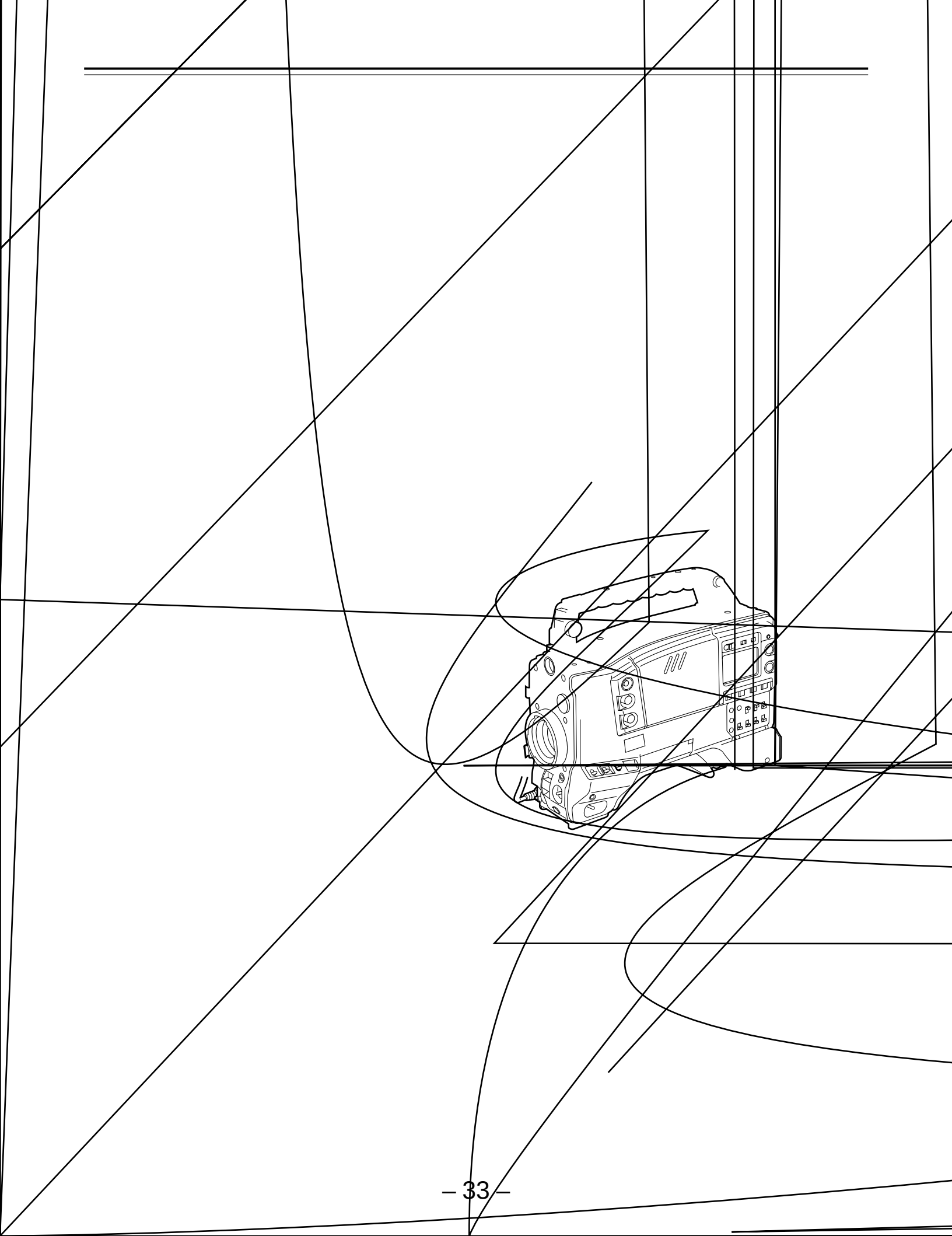

Adjusting the Position

1 Lift up the viewfinder forward-backward/left/right position clamp lever to release the lock.

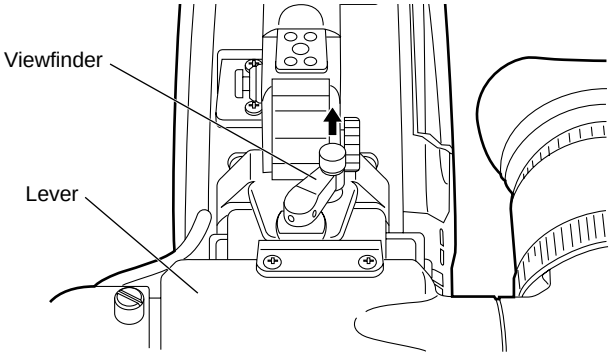

2 Adjust the position of the viewfinder in the forward-backward and left-right directions.

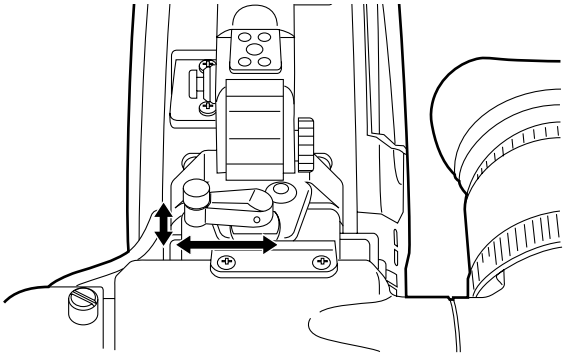

3 Tighten the viewfinder forward-backward/left-right position clamp lever to the locked position.

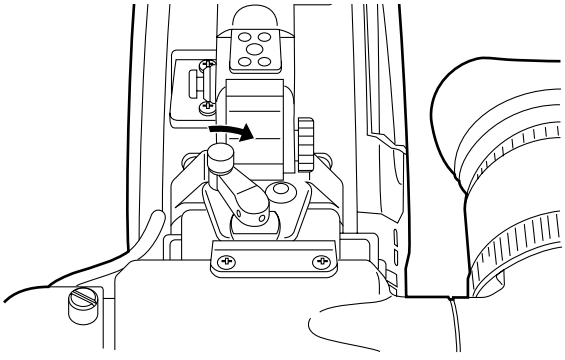

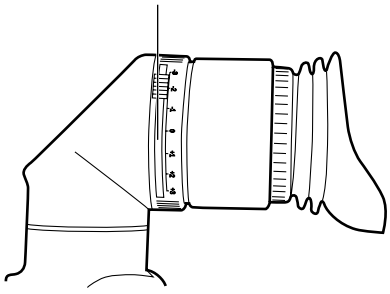

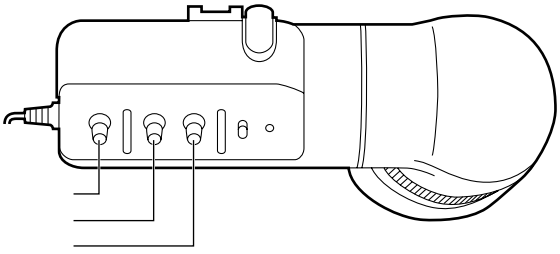

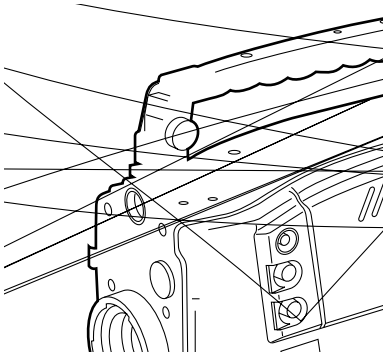

Detaching the Eyepiece

Detaching the eyepiece allows the entire screen to be seen clearly even when shooting with your eye removed from the viewfinder. This also facilitates the removal of dust which has adhered to the CRT screen and mirror.

<**Note**>

Absolutely do not wipe the mirror surface as it has been specially treated. Dust which has adhered to the mirror should be blown away with a blower, etc.

1 Press the lock button.

2 Turn the lock ring as far as possible in the counter-clockwise direction and line up the alignment marks on the lock ring and viewfinder barrel.

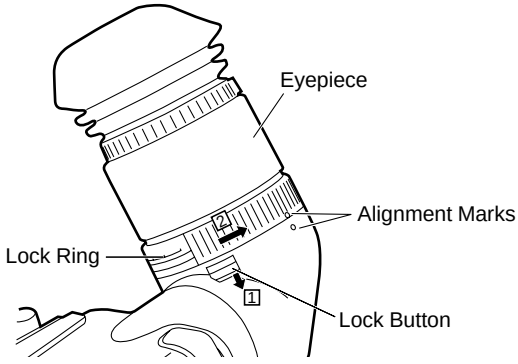

3 Detach the eyepiece.

Remounting the eyepiece

1. Line up the alignment marks on the lock ring and the viewfinder barrel, and then insert the eyepiece.
2. Turn the eyepiece as far as possible in the clockwise direction. The lock button latches with a clicking sound, and remounting is completed.

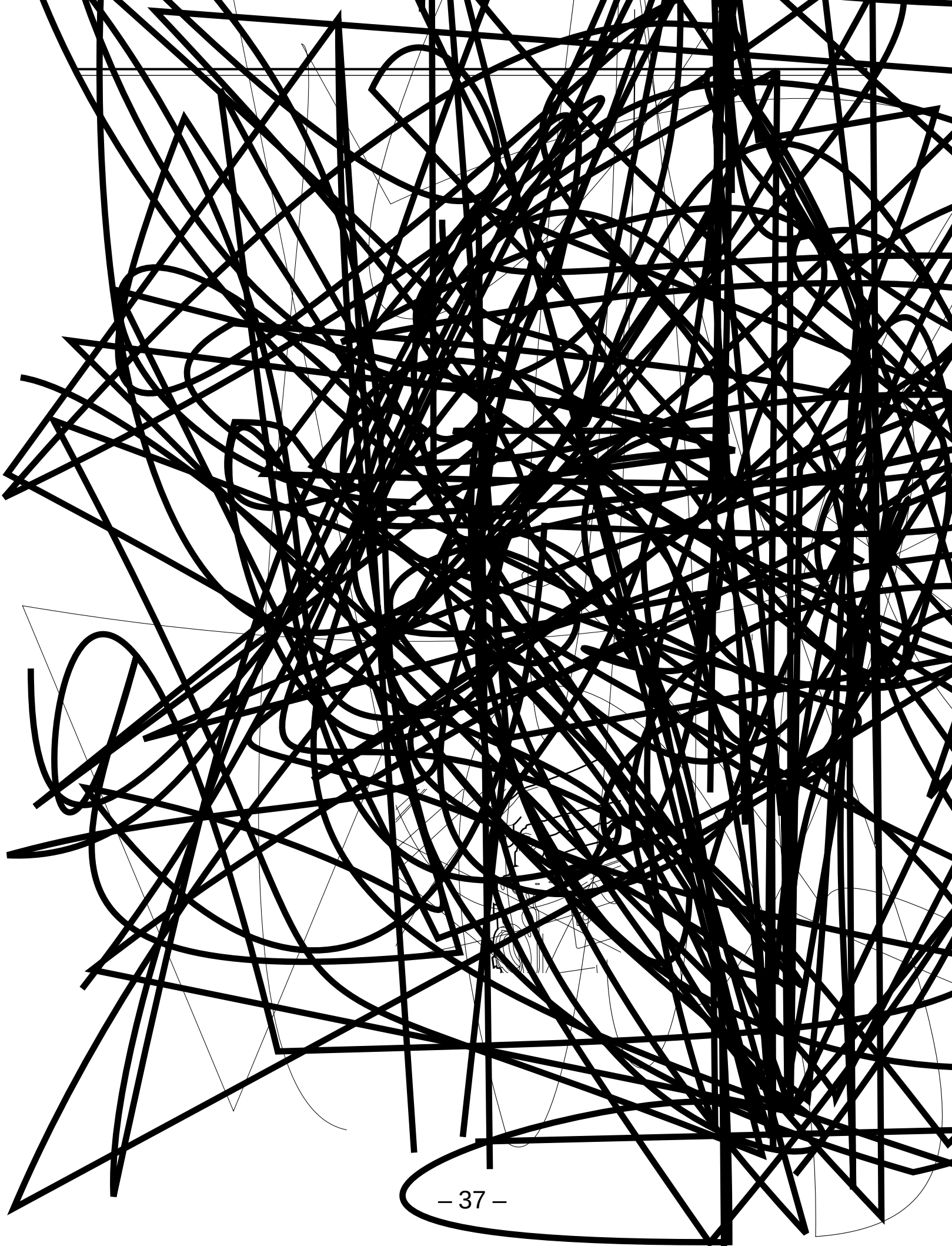

Mounting the AJ-MH700P Microphone Holder (Option)

1 Remove the microphone holder mounting screws.

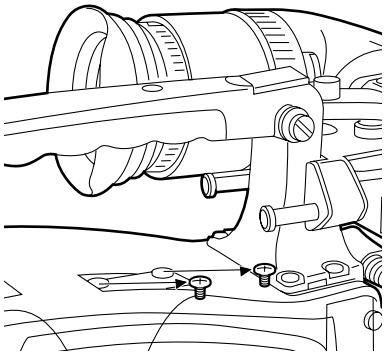

2 Mount the AJ-MH700P microphone adaptor (option) to the main unit.

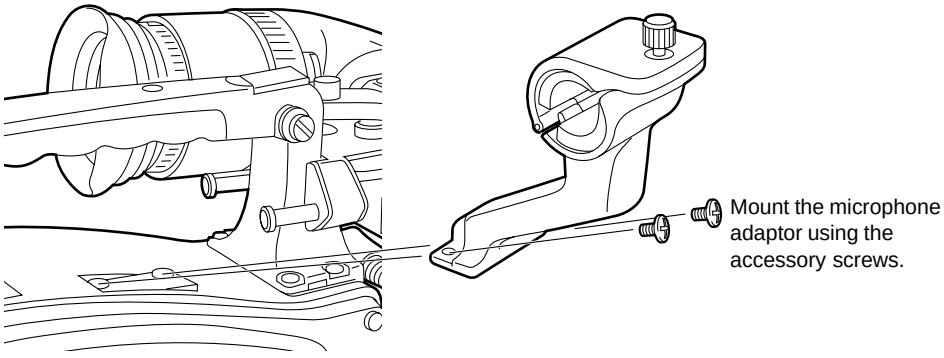

3 Mount the microphone to the microphone holder and tighten the screws.

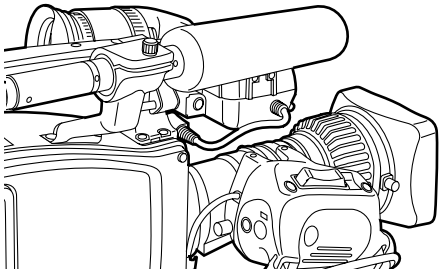

4 Connect the microphone connecting cable to the MIC IN jack.

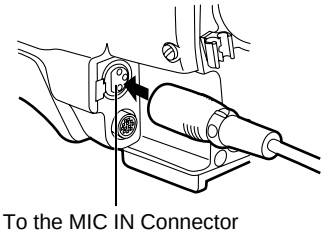

5 Set the AUDIO IN switch to FRONT [MIC] in accordance with the audio channel to be recorded.

Mounting the Unit to a Tripod

When mounting the unit to a tripod, use an optional tripod attachment.

1 Mount the tripod attachment (SHAN-TM700) onto the tripod.
Select the attachment hole in consideration of the unit's and tripod attachment's gravity. In addition, check that the diameter of the selected hole matches the dia
universal head's camera mounting screw.

Tripod Attachment

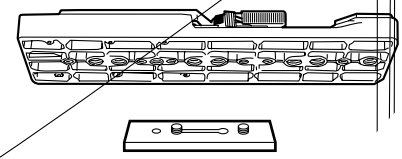

2 Mount the camera to the tripod attachment.
Slide the unit forward along the grooves until a clic

W

Mounting the Shoulder Belt

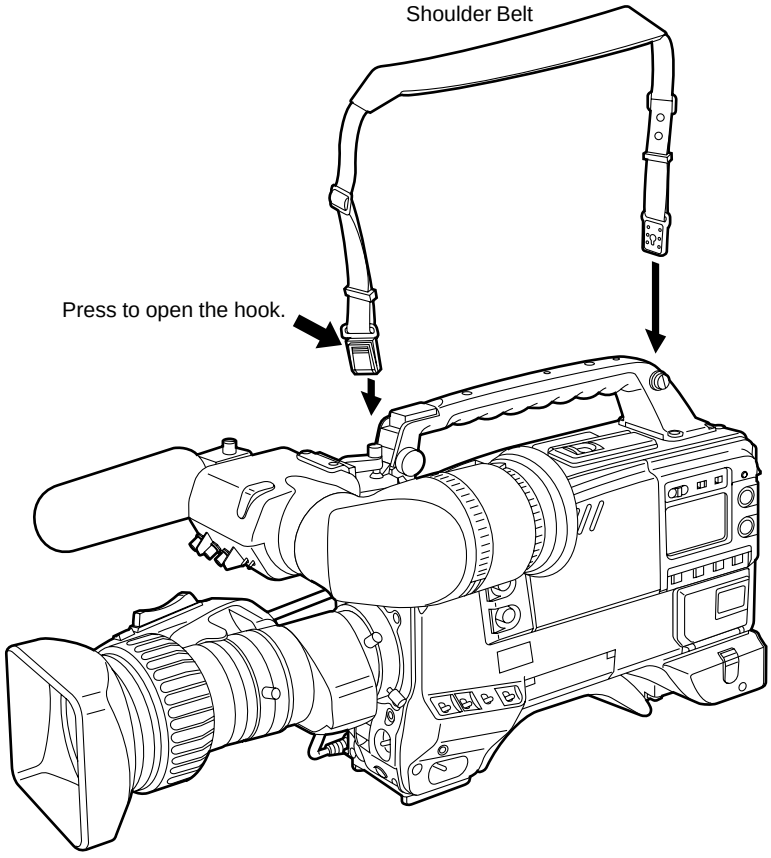

To remove the shoulder belt, open the hooks and then remove the belt.

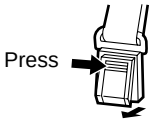

<**Note**>
When mounting and removing the shoulder belt, press on the top of the hooks to check that the belt is securely mounted.

Adjusting the Shoulder Pad Position

The shoulder pad can be slid up to $^{2}/_{5}$″ in the forward-backward direction from the center position (the position when shipped from the factory). Adjust the shoulder pad position to facilitate operation of the unit.

1 Loosen the two screws.

2 Slide the pad in the forward-backward direction to select an appropriate position.

3 Tighten the screws to clamp the pad.

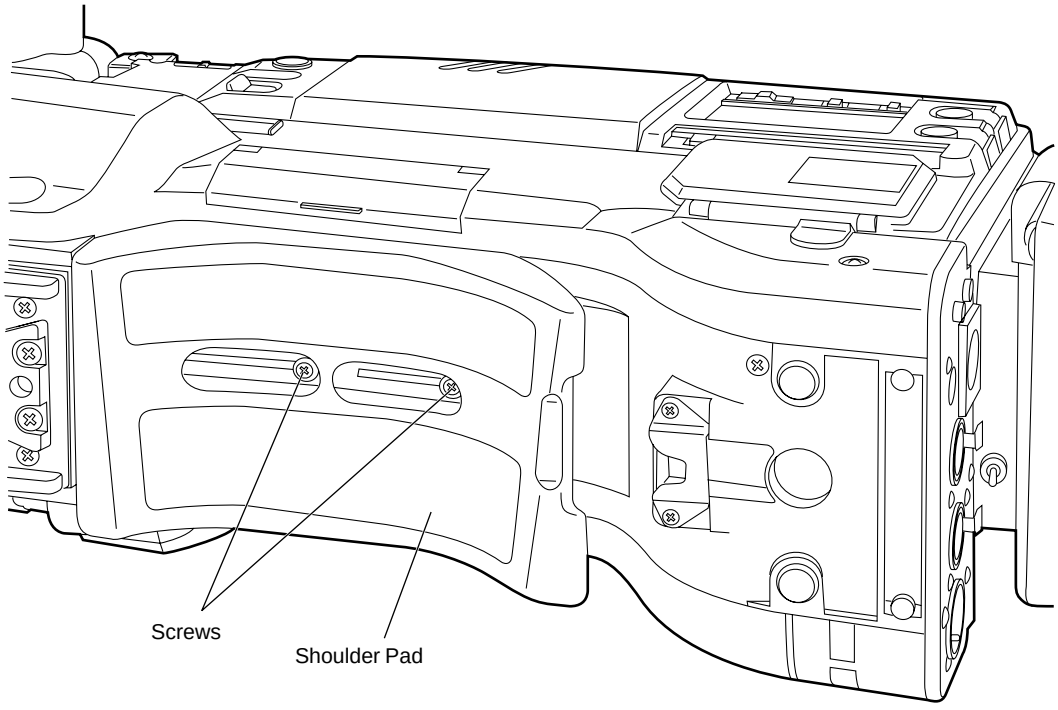

Bottom

Connecting the AJ-EC3 Extension Control Unit (Option)

Connecting the AJ-EC3 extension control unit (option) allows a portion of the camera section functions to be operated by remote control.
When the AJ-EC3 is connected and the POWER switches of the unit and AJ-EC3 are set to ON, the unit automatically enters remote control mode.
The handling instructions included with the AJ-EC3 describe operations for when the AJ-EC3 is connected to an AQ series digital camera.
When the AJ-EC3 is connected to the AJ-SDC915, some functions differ, and some features cannot be used.

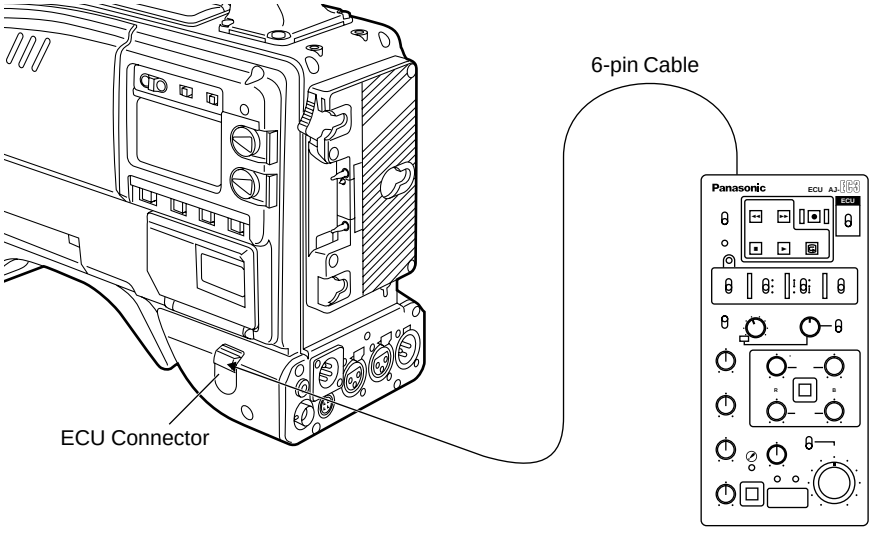

AJ-EC3

<**Notes**>

- The POWER switches of the unit and AJ-EC3 must be set to OFF before the 6-pin cable is connected or disconnected.
- **When OFF has been set for ECU DATA SAVE on the SUB menu CAMERA SW MODE page of MAIN menu screen 2 of 4**

  All adjustments and settings made using the switches and controls on the menu setting section of the AJ-EC3 are erased when the unit's POWER switch is set to OFF. Neither is it possible to save any of the adjustments and settings—except for the menu settings—performed using the AJ-EC3's switches and controls on the setup card. However, when the AJ-EC3 is connected again, these settings return to the AJ-EC3 settings.
  (Menu contents set with the menu setting section are saved.)
  For use in this mode, set the POWER switch on the AJ-EC3 to the OFF position before the unit's POWER switch is set to OFF. If the unit's POWER switch is set to OFF before the POWER switch on the AJ-EC3 is set to the OFF position, the adjustments and settings performed when the AJ-EC3 was operated will be saved instead.
- **When ON has been set for ECU DATA SAVE on the SUB menu CAMERA SW MODE page of MAIN menu screen 2 of 4**

  The adjustments and settings performed using the switches and controls on the AJ-EC3's menu setting area will not be lost even when the unit's POWER switch is set to the OFF position.

<**Note**>

The functions of the AJ-EC3 are limited as follows.

- The STORE switch does not function.
  (If the menu settings are changed while the AJ-EC3 is connected to the AJ-SDC915, the new menu settings are saved automatically as soon as the changes are made.)
  Note that the AJ-EC3 gain switch displays −3, 0 and 9 correspond to L, M and H, and the OUTPUT switch settings CAMERA, TEST and BAR to CAM/AUTO KNEE ON, CAM/AUTO KNEE OFF and BAR for each main unit.
- The Synchro scan and Super V modes cannot be used while the AJ-EC3 is connected to the unit.
- The lens iris (IRIS) control of the AJ-EC3 is valid only when the lens iris AUTO/MANUAL selector is set to AUTO.

Displaying the Setting Menu Inside the Viewfinder

The setting menus are displayed on the viewfinder screen when the MENU SET/OFF switch is set to the SET position.
There are two types of setting menus, MAIN menus and SUB menus.
Setting menus are displayed in 1-page increments.
All the pages contained in the setting menus and how each page is configured are shown in the table below.
The menu configuration can be changed to suit a particular objective.

Setting Menu Configuration

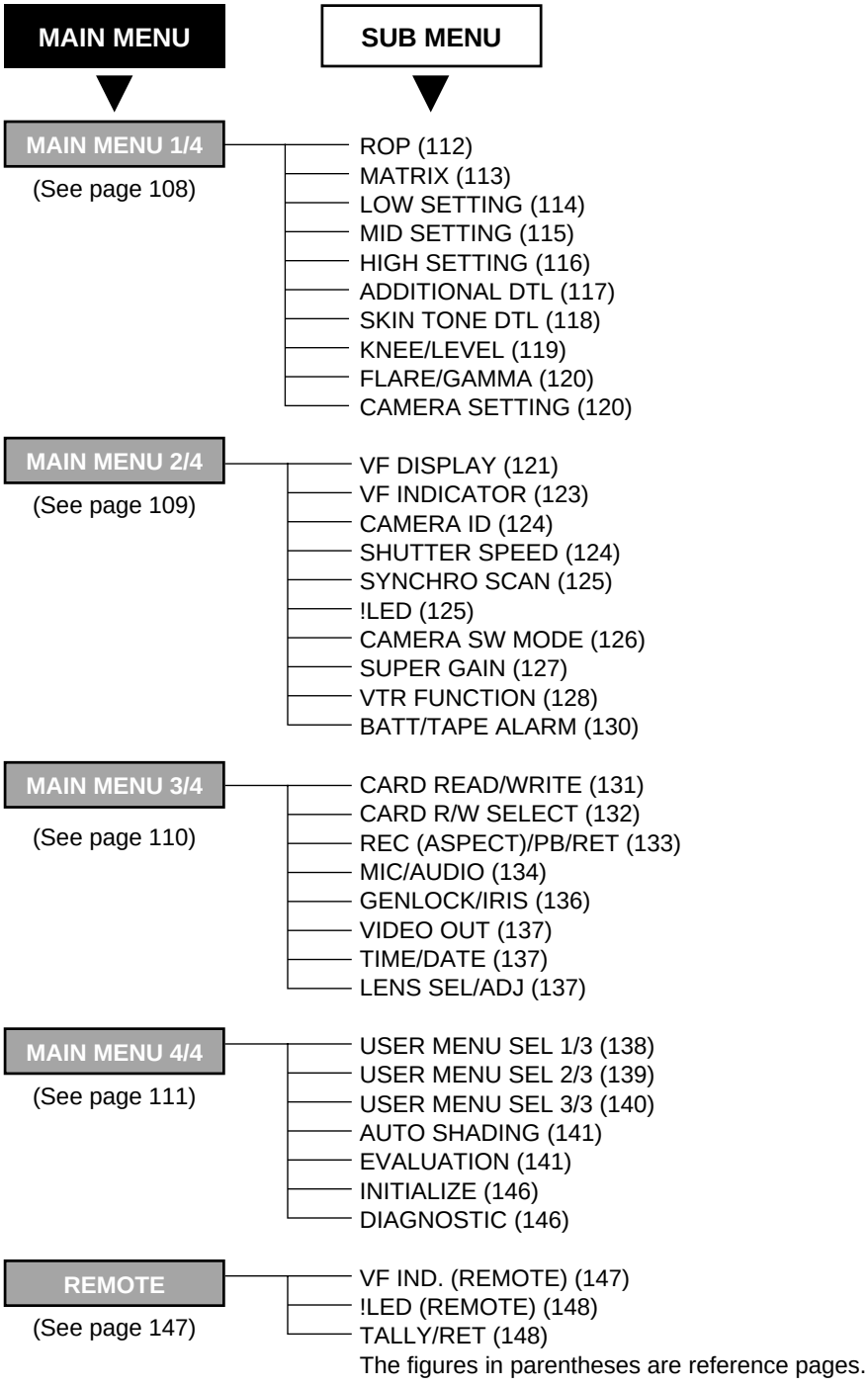

The figures in parentheses are reference pages.

Checking and Selecting the Master Gain Setting

1 The menu shown in the figure below is displayed when the MENU SET ON/OFF switch is set to SET while the HOLD button is held down.

2 The current low, mid and high gain settings are displayed.

3 Press the SHIFT/ITEM button, and move the arrow (cursor) to the LOW, MID or HIGH GAIN menu item.

4 Set the gain by pressing the UP or DOWN button. Any value from −3 dB to +30 dB can be set.

```
→< MASTER GAIN >
  LOW GAIN     : 0dB
  MID GAIN     : 9dB
  HIGH GAIN    :18dB

 < BATTERY SELECT >
  BATTERY SEL :NiCd12

 < COLOR BAR SELECT >
  COLOR BAR   :SMPTE
```

Selecting the Color Bar Setting

1 The menu shown in the figure below is displayed when the MENU SET ON/OFF switch is set to SET while the HOLD button is held down.

2 To select the color bar menu item, press the SHIFT/ITEM button, and move the arrow (cursor) to COLOR BAR.

3 Select the color bar setting by pressing the UP or DOWN button. The SMPTE or SNG setting can be selected.

```
< MASTER GAIN >
 LOW GAIN     : 0dB
 MID GAIN     : 9dB
 HIGH GAIN    :18dB

< BATTERY SELECT >
 BATTERY SEL :NiCd12

< COLOR BAR SELECT >
→COLOR BAR    :SMPTE
```

Checking the DIAGNOSTIC Screen Setting

1 Set the MENU SET ON/OFF switch to SET while the HOLD button is held down.

2 Press the PAGE button.

3 The menu screen shown in the figure below appears, and it is now possible to check the DIAGNOSTIC screen settings.

4 To close the menu screen, return the MENU SET ON/OFF switch to OFF.

```
     < DIAGNOSTIC >
OPERATION    :00000 x10h
DRUM RUNNING:00000 x10h
THREADING    :00000 x10

VTR SYSCON   Ver<Px.xx>
CAM SYSCON   Ver<x.x>x.x
DATA ROM     Ver<x.x>
DV           Ver<x.xx   >
                 xx.xx.xx
```

Changing the setting menu configuration

The setting menu can be configured by selecting only the pages necessary for the application. Pages are selected using the MENU SELECT page of the engineer menu mode.
When using the engineer menu, switch the unit to engineer mode as described below.
The unit is switched to user mode by setting the MENU SET/OFF switch to “SET”.
The unit is switched to engineer mode by holding down the SHIFT/ITEM and UP buttons simultaneously and setting the MENU SET/OFF switch to SET.

The user and engineer modes differ as follows.

User mode: Only the selected pages the setting menu can be used. The data set on each page is written to the non-volatile memory, allowing it to be stored for extended periods of time.

Engineer mode: All pages contained in the setting menu can be used. In addition, the data set at each page is written to the non-volatile memory, allowing it to be stored for extended periods of time.

If, upon completion of the adjustments and settings in the engineer mode, the menu is set to be configured only with the frequently used pages, the pages which are often needed can be called promptly.
(Select the method using the user menu selection procedure described on pages 138 to 140.)

<**Note**>
The engineer menu will always open if the AJ-EC3 extension control unit (optional accessory) is connected to the unit and the unit is operated from an external source.

Transferring to the MAIN menus and SUB menus

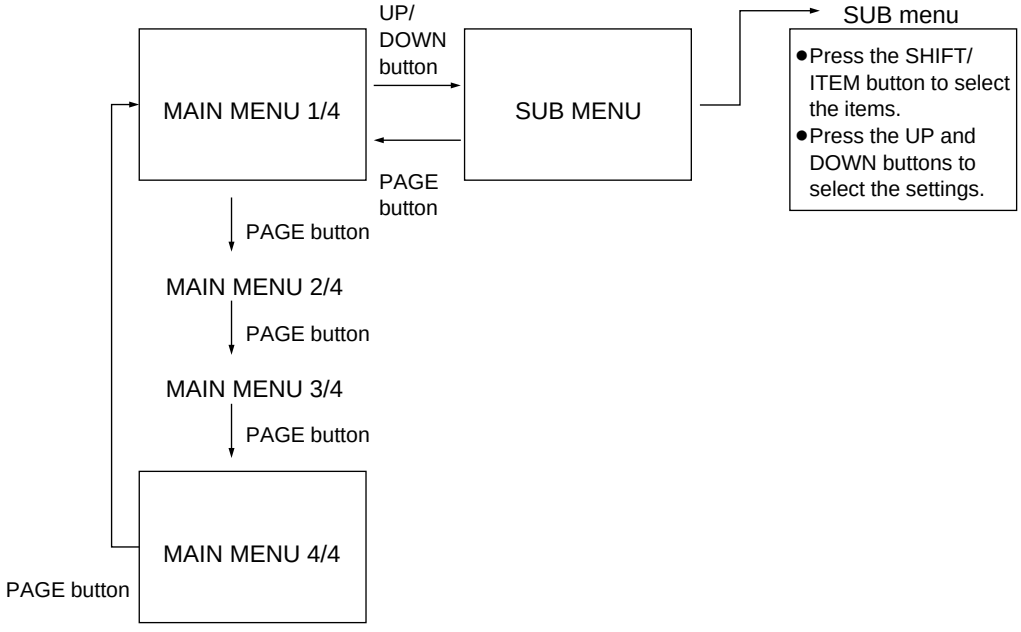

- To select a page in a SUB menu, first move to the MAIN menu and then select the desired SUB menu.
- Changes are made to the settings on the SUB menus.

Basic Setting Menu Operations

The setting menu is operated using the MENU SET/OFF switch and the SHIFT/ITEM, UP, DOWN and PAGE buttons.

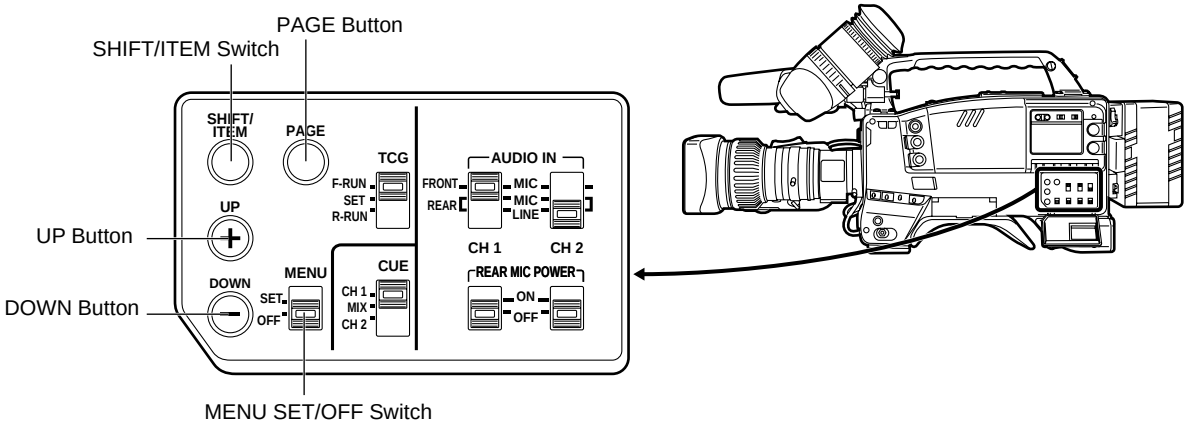

To display a SUB menu directly (user mode)

1 Set the MENU SET/OFF switch to the SET position.
The status displays at the top and bottom of the viewfinder screen are cleared, and the page on which the previous setting menu operation was completed now appears on the screen.
When a menu is used for the first time, the page with the lowest number among the selected pages appears on the screen.

```
→< ROP >

MASTER PED   : +000
MASTER DTL   : +00
MASTER GAMMA : 0.45
R GAIN       : +000
B GAIN       : +000
R PEDESTAL   : +000
G PEDESTAL   : +000
B PEDESTAL   : +000
```

To display a MAIN menu directly (engineer mode)

1 Set the MENU SET/OFF switch to the SET position while the SHIFT/ITEM button and UP button are held down together.
MAIN menu screen 1 of 4 now appears.

```
→****MAIN MENU1/4****
 ROP
 MATRIX
 LOW SETTING
 MID SETTING
 HIGH SETTING
 ADDITIONAL DTL
 SKIN TONE DTL
 KNEE/LEVEL
 FLARE/GAMMA
 CAMERA SETTING
```

The pages can also be selected using the UP and DOWN buttons in combination with the PAGE button as indicated below.

- **PAGE+UP:** When the UP button is pressed while the PAGE button is held down, operation advances to the next menu and the menu next to it and so on for as long as the button is held down.
- **PAGE+DOWN:** When the DOWN button is pressed while the PAGE button is held down, operation is returned to the previous menu and the menu before it and so on for as long as the button is held down.

To select a MAIN menu page

1 Press the PAGE button to select a particular MAIN menu.
Each time the button is pressed, the MAIN menu screen is advanced by one page (1→2→3→4→1→, etc.).

```
→****MAIN MENU1/4****
 ROP
 MATRIX
 LOW SETTING
 MID SETTING
 HIGH SETTING
 ADDITIONAL DTL
 SKIN TONE DTL
 KNEE/LEVEL
 FLARE/GAMMA
 CAMERA SETTING
```

→ PAGE button →

```
→****MAIN MENU2/4****
 VF DISPLAY
 VF INDICATOR
 CAMERA ID
 SHUTTER SPEED
 SYNCHRO SCAN
 !LED
 CAMERA SW MODE
 SUPER GAIN
 VTR FUNCTION
 BATT/TAPE ALARM
```

To transfer from a MAIN menu to a particular SUB menu

1 Press the SHIFT/ITEM button.
When this button is pressed, the cursor (arrow) indicating the selected item moves to the SUB menu.

```
→****MAIN MENU1/4****
 ROP
 MATRIX
 LOW SETTING
 MID SETTING
 HIGH SETTING
 ADDITIONAL DTL
 SKIN TONE DTL
 KNEE/LEVEL
 FLARE/GAMMA
 CAMERA SETTING
```

→ SHIFT/ITEM button →

```
 ****MAIN MENU1/4****
→ROP
 MATRIX
 LOW SETTING
 MID SETTING
 HIGH SETTING
 ADDITIONAL DTL
 SKIN TONE DTL
 KNEE/LEVEL
 FLARE/GAMMA
 CAMERA SETTING
```

2 Press the UP or DOWN button.
Operation is now switched to the selected SUB menu.

```
      →< ROP >

 MASTER PED   : +000
 MASTER DTL   : +00
 MASTER GAMMA : 0.45
 R GAIN       : +000
 B GAIN       : +000
 R PEDESTAL   : +000
 G PEDESTAL   : +000
 B PEDESTAL   : +000
```

To transfer from a SUB menu to the MAIN menu

1 Press the PAGE button.
Operation moves to the MAIN menu.

```
      →< ROP >

 MASTER PED   : −003
 MASTER DTL   : +00
 MASTER GAMMA : 0.45
 R GAIN       : +000
 B GAIN       : +000
 R PEDESTAL   : +000
 G PEDESTAL   : +000
 B PEDESTAL   : +000
```

→ PAGE button →

```
→****MAIN MENU1/4****
 ROP
 MATRIX
 LOW SETTING
 MID SETTING
 HIGH SETTING
 ADDITIONAL DTL
 SKIN TONE DTL
 KNEE/LEVEL
 FLARE/GAMMA
 CAMERA SETTING
```

Operations on SUB menus

Selecting the desired item

1 Press the SHIFT/ITEM button.
Each time this button is pressed, the cursor (arrow) which indicates the selected item moves to the next item.

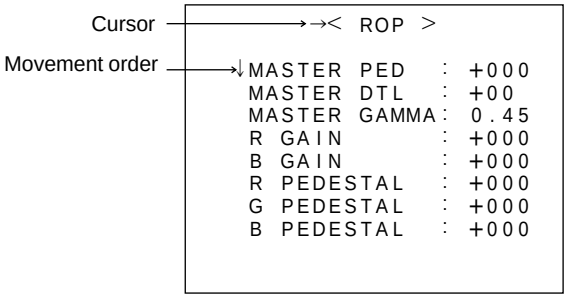

The item can also be selected using the UP and DOWN buttons as follows.

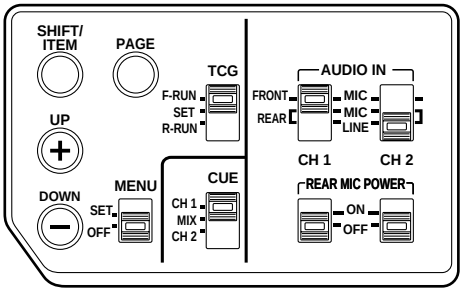

Changing the settings

Press the UP button to increase the setting.

- The setting is incremented by 1 level each time the UP button is pressed.

Press the DOWN button to decrease the setting.

- The setting is decremented by 1 level each time the DOWN button is pressed.

Changing the ON/OFF selection

The setting switches to ON or OFF each time the UP (or DOWN) button is pressed.

Returning to the default settings

Align the arrow with READ FACTORY DATA on the “INITIALIZE” SUB menu page of the MAIN menu screen 4 of 4.
When the UP (or DOWN) button is now pressed, the initial (factory) settings will be restored.
However, care should be taken as the camera ID cannot be returned to the default settings.

Quitting the menu

Set the MENU SET/OFF switch to OFF.

- The setting menu disappears from the viewfinder screen and the displays indicating the unit’s current status appear at the top and bottom of the viewfinder screen.

Lamp Displays Inside the Viewfinder

The viewfinder displays are as follows.

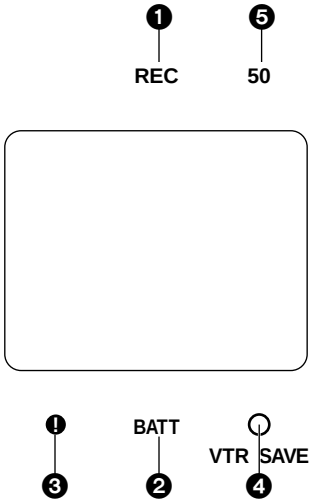

1. **REC (recording) lamp**
   This lamp lights (red) during recording, and flashes when warnings are issued.
   ●See “Warning System” (page 149, 150) for a detailed description.

2. **BATT (battery) lamp**
   When the battery voltage has dropped, this lamp begins flashing several minutes before the unit can no longer be operated, and lights when the unit can no longer be operated.
   To prevent operation from being interrupted, exchange the battery quickly before the battery runs out.
   ●See “Warning System” (page 150) for a detailed description.

3. **! (irregular operation status warning) lamp**
   This lamp lights when the unit enters irregular operation status for any of the items set to ON at the ! LED page of the setting menu. Applicable items are as follows.

Setting item	Setting contents
Gain (0 dB)	The gain is set to a value other than 0 dB.
Gain (−3 dB)	The gain is set to a value other than −3 dB.
SHUTTER switch	The switch is set to ON.
WHITE PRESET switch	The switch is set to PRESET.
Lens extender	The lens extender is being used.
Filter control	The control is set to a value other than 1.
SUPER V switch	The switch is set to ON.
25M/50M	Lamp lights when the 25 or 50 Mbps recording format is set.

   ●See “Setting the ! Lamp Display” (next page) for selecting ! lamp display items.

4. **VTR SAVE (VTR power saving) lamp**
   This lamp lights when the VTR SAVE/STBY switch is set to SAVE. It is not lighted during recording.

5. **50 (50Mbps recording/playback) lamp**
   This lamp lights when the mode for recording at 50 Mbps is selected and when a tape is played back at 50 Mbps.

<**Note**>
The SAVE status is automatically established and the lamp lights regardless of the VTR SAVE/STBY switch position at the time set by the pause timer (pause time) when the unit is in the recording pause mode or when 2 minutes have elapsed since the unit was placed in the playback pause mode.

Setting the ! Lamp Display

The items subject to the ! lamp display are selected on the "! LED" SUB menu page on the MAIN menu screen 2 of 4. (Under the factory setting, the "! LED" page is not displayed.) To perform operations on the "! LED" page, either switch the unit to the engineer mode or select the "! LED" page on the USER MENU SEL page 2 of 3 on the MAIN menu screen 4 of 4.

- For details on selecting the engineer mode and display page, refer to Setting Menu Configuration (page 51).

1 Set the MENU SET/OFF switch to the SET position while the SHIFT/ITEM button and UP button are held down together.

2 Press the PAGE button to display the MAIN menu screen 2 of 4.

3 Repeatedly press the SHIFT/ITEM button to move the cursor to the "! LED" position.

4 Press the UP or DOWN button to open the ! LED page.

```
→< !LED >

GAIN(0dB)     :ON
GAIN(−3dB)    :OFF
SHUTTER       :ON
WHITE PRESET  :OFF
EXTENDER      :ON
FILTER        :OFF
SUPER V       :OFF
25M/50M       :OFF
```

GAIN (0 dB):	This selects whether the ! lamp is to light when the gain is set to a value other than 0 dB.
GAIN (−3 dB):	This selects whether the ! lamp is to light when the gain is set to a value other than −3 dB.
SHUTTER:	This selects whether the ! lamp is to light when the SHUTTER switch is set to the ON position.
WHITE PRESET:	This selects whether the ! lamp is to light when the white balance memory channel is set to PRST.
EXTENDER:	This selects whether the ! lamp is to light when the lens is in the EXTENDER mode.
FILTER:	This selects whether the ! lamp is to light when the filter is set to a position other than 3200K and CLEAR. (1)
SUPER V:	This selects whether the ! lamp is to light when SUPER V is set to ON.
25M/50M:	This selects whether the ! lamp is to light when the recording format is set to 25 Mbps or 50 Mbps.

5 Repeatedly press the SHIFT/ITEM button to move the cursor to the position of the desired item.

6 Press the UP or DOWN button at the selected item to select whether the ! lamp is to be set ON or OFF.
To select ON: Press the UP button.
To select OFF: Press the DOWN button.

To select ON or OFF for another item, repeat steps 5 and 6.

7 When the menu operations are completed, return the MENU SET/OFF switch to the OFF position.
The setting menu is cleared from the viewfinder screen, and the unit's current statuses appear at the top and bottom of the viewfinder screen.

Status Displays Inside the Viewfinder Screen

In addition to images, messages indicating the unit's settings and operating status appear on the viewfinder screen. The center marker and safety zone marker, etc. are also displayed.
When the MENU SET/OFF switch is set to OFF, items set to SET at the VF DISPLAY page of the setting menu and using related switches appear at the top and bottom of the screen.
Messages informing of the setting contents or of the adjustment course or results can also be displayed for approximately 3 seconds when settings are changed, during the course of adjustments, or after adjustments have been completed.

- See "Selecting Display Items" (page 60) for selecting display items, "Display Mode and Setting Change Message" (page 61) for the setting change message, and "Setting the Marker Displays" (page 62) for the marker displays.

The display positions of all items which can be displayed are shown in the figure below.

❶ Extender display
❷ Shutter speed/mode display
❸ Remaining tape length display
❹ Remaining battery level display
❺ Filter display
❻ White balance memory display
❼ Gain value display
❽ Audio level display
❾ Iris value display
❿ Warning display
⓫ Safety zone marker
⓬ Center marker
⓭ Super iris ON or super black ON display
⓮ MARK1/MARK2/TAKE display
⓯ TCG (Time Code Generator) display
⓰ Master gain & super gain setting display
⓱ 50M display
⓲ Battery setting display

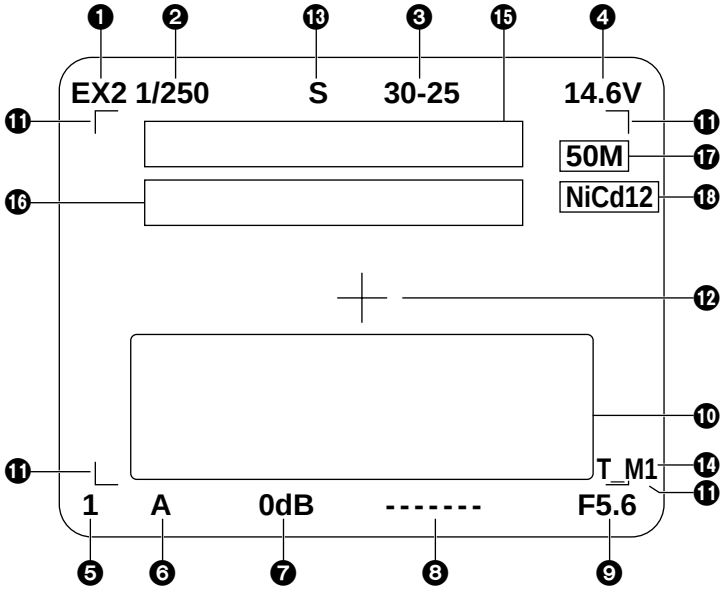

<**Note**>
When in SUPER V mode, "SUP.V" is displayed at shutter speed position ❷ in the Viewfinder screen.

1 Extender display
This is displayed when the lens extender is being used.

2 Shutter speed/mode display
This displays the shutter speed or shutter mode setting.
OFF (OFF is not displayed.):
The shutter is not used.
1/100, 1/120, 1/250, 1/500, 1/1000, 1/2000:
Shutter speeds (seconds) during standard mode.
1/60.8–1/250 (SYNCHRO SCAN):
Synchro scan mode is selected.
SUPER V: High vertical resolution mode is selected.

3 Remaining tape length display
This indicates the remaining tape length (minutes) for the VTR during recording.

Remaining tape length display (25 Mbps)

Display	Remaining tape length
F–60	Full to 60 minutes
60–55	60 to 55 minutes
55–50	55 to 50 minutes
50–45	50 to 45 minutes
45–40	45 to 40 minutes
40–35	40 to 35 minutes
35–30	35 to 30 minutes
30–25	30 to 25 minutes
25–20	25 to 20 minutes
20–15	20 to 15 minutes
15–10	15 to 10 minutes
10–5	10 to 5 minutes
5–0	5 to 0 minutes

Remaining tape length display (50 Mbps)

Display	Remaining tape length
F–30	Full to 30 minutes
30–25	30 to 25 minutes
25–20	25 to 20 minutes
20–15	20 to 15 minutes
15–10	15 to 10 minutes
10–5	10 to 5 minutes
5–0	5 to 0 minutes

The “5–0” display flashes when there is less than 2 minutes of tape remaining.

4 Remaining battery level display
When an Anton Bauer Digital Magnum Series battery is used to supply power to the unit, the remaining battery level is displayed numerically (%).

<**Note**>
When a Digital Magnum series battery made by Anton Bauer is used to supply external power to the unit near the battery end, the remaining battery level display will show the external voltage, and the unit will be operated by the external power supply.

5 Filter display
This displays the type of filter selected.

6 White balance memory display
This displays the selected white balance automatic adjustment memory.
A: The WHITE BAL switch is set to A.
B: The WHITE BAL switch is set to B.
P: The WHITE BAL switch is set to PRST.

7 Gain value display
This displays the image amplifier gain setting (dB) set by the GAIN switch.

8 Audio level display

This displays the audio CH1 level.
During sine wave input, the audio level display corresponds roughly to the VTR level meter display as follows.

Audio Channel 1 Level Display	▬	▬	▬	■	▬	▬	▬	*
VTR Level Meter	-40	-30	-25	-20	-15	-10	-5	0

9 Iris value display

This displays the approximate iris setting (F number).

10 Warning display

This displays the black balance, white balance, auto knee function, super iris, super gain and other warning displays.

11 Safety zone marker

This indicates the safety zone to be the 80% or 90% (factory setting) range of the viewfinder screen area.
The ratio of this area to the total screen area is selected on the VF DISPLAY page of the setting menu.
●Refer to “Setting the Marker Displays” (page 62) for further details.

12 Center marker

This indicates the center of the viewfinder screen.
The marker appears when its display is set to ON on the VF DISPLAY page of the setting menu.

13 Super iris ON display

This indicates that the super iris is ON.

14 MARK1/MARK2/TAKE display

If the MARK switch is pressed while the Picture Link function is used, M1 or M2 appears to indicate the significance of the information concerned.
Nothing will appear if this function is not required.
Alternatively, T_ (TAKE) appears when the RET switch of the lens is used as the TAKE function.

15 TCG display

This displays the time code generator value.

16 Master gain & super gain setting display

When the MODE CHECK button is pressed, the current GAIN L/M/H and SUPER GAIN settings are displayed.

17 50M display

When the MODE CHECK button is pressed, this display appears when the recording format has been set to 50 Mbps.

18 Battery setting display

This indicates the type of the battery currently being used.

---

1) Iris value display
The iris value is displayed when using a lens with the iris value display function.

Selecting Display Items

The items which are to be displayed on the viewfinder screen can be selected by setting ON or OFF for each item on the VF INDICATOR page. The items which can be selected are as follows.

- Extender display
- Shutter speed/mode display
- Remaining tape length display
- Remaining battery level display
- Filter display
- White balance memory display
- Gain value display
- Level meter display
- Iris value/super iris ON status display
- Camera ID display

- The camera ID is displayed when recording the color bar according to the OUTPUT/AUTO KNEE switch setting. See “Setting the Camera ID” (page 63) for a detailed description.

Select the items to be displayed on the viewfinder screen.

1 Set the MENU SET/OFF switch to the SET position while the SHIFT/ITEM button and UP button are held down together.

2 Press the PAGE button to display the MAIN menu screen 2 of 4.

3 Press the SHIFT/ITEM button to move the cursor to the “VF INDICATOR” position.

4 Press the UP or DOWN button to open the VF INDICATOR page.

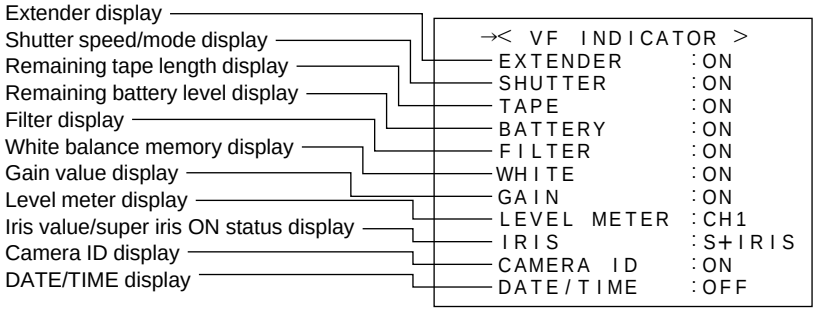

5 Press the SHIFT/ITEM button to move the cursor to the position of the disired item.

6 Press the UP and DOWN buttons to choose whether to display (ON) or not display (OFF) the selected item on the viewfinder screen.
The setting switches to ON or OFF each time the UP (or DOWN) button is pressed.
Repeat steps 5 and 6 when setting display ON/OFF for other items.

7 When menu operations have been completed, set the MENU SET/OFF switch to OFF.
The setting menu disappears from the viewfinder screen and the displays indicating the settings of the selected items appear.

Display Mode and Setting Change Message

Messages informing of the contents of changed settings and adjustment results can be limited to part of the displayed items or not displayed for all items.
The conditions under which messages are displayed and the corresponding display modes are shown in the table below.

Setting change/adjustment results messages and display modes

Conditions under which messages are displayed	Message	Display mode setting		
		1	2	3
When the filter selection is changed.	Filter: n (n=1, 2, 3, 4)	×	×	○
When the gain setting is changed.	GAIN: n dB (n=−3, 0, 3, 6, 9, 12, 15, 18, 21, 24, 30, 36)	×	×	○
When the WHITE BAL switch setting is changed.	WHITE: n (n=ACH, BCH, PRESET)	×	×	○
When the OUTPUT/AUTO KNEE switch is set to AUTO KNEE or OFF*)	AUTO KNEE: ON (or OFF)	×	○	○
When the shutter speed/ mode setting is changed.	SS: 1/100 (or 1/120, 1/250, 1/500, 1/1000,1/2000, S. SCAN, SUPER V)	×	○	○
When the white balance is adjusted (AWB)	Ex.) AWB: OK ●See “Adjusting the White Balance” (page 70) for a detailed description.	×	○	○
When the black balance is adjusted (ABB)	Ex.) ABB: OK ●See “Adjusting the Black Balance” (page 75) for a detailed description.	×	○	○

○: Message displayed
×: Message not displayed

*) The message is displayed for approximately 3 seconds immediately after the power for the unit is turned on.

<**Note**>
Whether a message is displayed or not also depends on the status of other menu settings.
For instance, even if the filter selection is set to “1”, the filter message will appear if FILTER is set to ON on the VF INDICATOR page.

Changing the Display Mode

The display mode setting appears on the “VF DISPLAY” SUB menu page of MAIN menu screen 2 of 4.

1 Set the MENU SET/OFF switch to the SET position while the SHIFT/ITEM button and UP button are held down together.

2 Press the PAGE button to display the MAIN menu screen 2 of 4.

3 Press the SHIFT/ITEM button to move the cursor to the “VF DISPLAY” position.

4 Press the UP or DOWN button to open the VF DISPLAY page.

```
  →< VF DISPLAY >
DISP CONDITION:NORMAL
DISP MODE      :3
SAFETY ZONE    :3
CENTER MARK    :ON
VF OUT         :Y
VF DTL         :2
ZEBRA1 DETECT  :070%
ZEBRA2 DETECT  :085%
ZEBRA2         :SPOT
50M INDICATION:ON
LOW LIGHT LVL  :45%
```

5 Press the SHIFT/ITEM button to move the cursor to the “DISP MODE” position.

6 Press the UP (or DOWN) button to switch to the desired display mode.

7 When the menu operations are completed, set the MENU SET/OFF switch to the OFF position.
The setting menu is cleared from the viewfinder screen, and the unit’s current statuses appear at the top and bottom of the viewfinder screen.

Setting the Marker Displays

ON or OFF is selected for the center mark and safety zone mark display and a ratio of 80% or 90% of the total screen area is set for the safety zone range on the “VF DISPLAY” SUB menu page of MAIN menu screen 2 of 4.

1 Perform steps 1 to 4 under “Changing the Display Mode” described above so that the VF DISPLAY page appears on the viewfinder screen, and align the cursor with SAFETY ZONE or CENTER MARK.

2 Press the UP (or DOWN) button to switch to the desired display mode.

3 When the menu operations are completed, set the MENU SET/OFF switch to the OFF position.
The setting menu is cleared from the viewfinder screen, and the unit’s current statuses appear at the top and bottom of the viewfinder screen.

Setting the Camera ID

The camera ID can be set at the CAMERA ID page of the setting menu.
A camera ID of up to ten characters including English letters, symbols and spaces can be used.
The camera ID is recorded when the OUTPUT/AUTO KNEE switch is set to BARS and the color bar signal is being recorded. It is also displayed on the viewfinder screen.

<**Note**>
When the setting menu is displayed, the camera ID is not displayed even if the color bar signal is output.

1 Set the MENU SET/OFF switch to the SET position while the SHIFT/ITEM button and UP button are held down together.

2 Press the PAGE button to display the MAIN menu screen 2 of 4.

3 Press the SHIFT/ITEM button to move the cursor to the “CAMERA ID” position.

4 Press the UP or DOWN button to open the CAMERA ID page.

```
→< CAMERA ID >

  ID:**********
```

: The cursor is moved to the right (max. 10 spaces) by the SHIFT/ITEM button.
: Alphanumerics, symbols and spaces are selected by the UP and DOWN buttons.

5 Keep pressing the UP (or DOWN) button until the character to be set appears.
Each time the UP button is pressed, the character display changes in the following order: space (□)→english letters (A to Z)→numbers (0 to 9)→symbols (space, >, <,), (, ’, ‘, ,, --, _ , ~, /, !). Pressing the DOWN button changes the character display in the reverse order.

6 Press the SHIFT/ITEM button to move the cursor to the next position, and return to step 5 to set the characters.

7 When the menu operations are completed, set the MENU SET/OFF switch to the OFF position.
The setting menu is cleared from the viewfinder screen, and the unit’s current statuses appear at the top and bottom of the viewfinder screen.

<**Note**>
When CAMERA ID on the VF INDICATOR page has been set to ON, the above camera ID setting will be recorded along with the color bars.

Remaining Battery Level and Audio Level Displays

Remaining tape length
When the amount remaining on the tape is more than 21 minutes long, all seven segments up to the "F" position appear lighted.
When it is less than 21 minutes long, one segment will go off for every 3-minute reduction in the length.

Remaining battery level
When the digital display (% display) battery is used, the 7 segments light up all the way to the "F" position if the remaining battery level is more than 70%.
If the remaining battery level is under 70%, one of the segments goes off for each further 10% reduction in the remaining level.

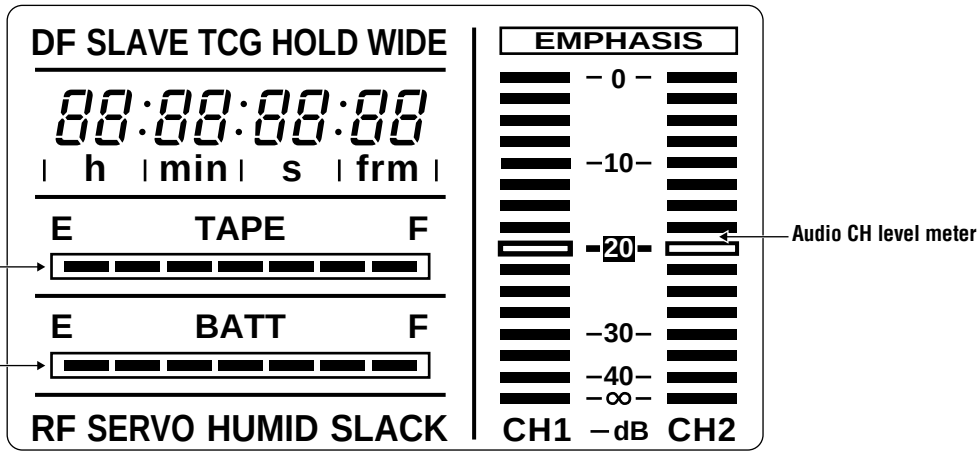

VTR Section Operation/Status-Related Displays

Lights
DF
SLAVE
TCG
HOLD
WIDE

Error code:
Indicated in the display window.

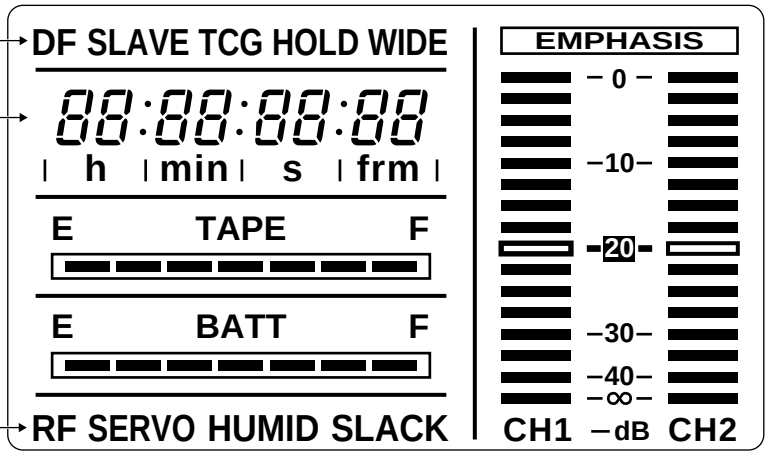

Warning display

RF: Lights when video head clogging occurs.
SERVO: Lights when the servo is out of order.
HUMID: Lights when condensation occurs on the head drum.
SLACK: Lights when tape wind-up trouble occurs.

●See "Warning System" (page 149) for a detailed description.

Time Code-Related Displays

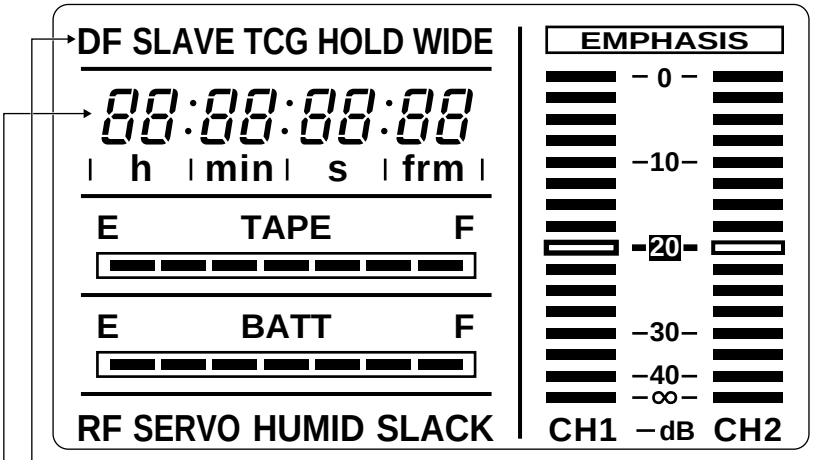

These lamps light to indicate the time code, CTL and real time displays.

DF: This lamp lights during drop frame mode

SLAVE: This lamp lights when the time code is locked to an external source.

HOLD: This lamp lights when the time code generator is held (when the HOLD button is pressed).

WIDE: This lamp lights when a tape is recorded or played back with an aspect ratio of 16:9.

Time counter display: This displays the time code, CTL, user bit and real time.

●See below for the relationship between displayed items and switch settings.

Relationship between the TCG and DISPLAY switch setting positions and the time counter display

The item displayed in the time counter display is determined by the TCG switch and DISPLAY switch settings.

Time code-related switch settings and display items

TCG switch position	DISPLAY switch position	Displayed item
SET	TC or CTL	Time code
	UB	User bit
F-RUN or R-RUN	CTL	CTL
	TC	Time code
	UB	User bit

Adjustment and Setup Using the Setting Menu

1 Set the MENU SET/OFF switch to the SET position while the SHIFT/ITEM button and UP button are held down together.

2 Press the PAGE button to display the MAIN menu screen 3 of 4.

3 Press the SHIFT/ITEM button to move the cursor to the “TIME/DATE” position.

4 Press the UP or DOWN button to open the TIME/DATE page.

```
→< TIME/DATE >

   YEAR   :99
   MONTH  :01
   DAY    :01
   HOUR   :00
   MINUTE:00

 ■TIME/DATE SET
```

5 Press the SHIFT/ITEM button to select the item to be changed.

6 Press the UP (or DOWN) button to change the setting value.
The number is incremented by +1 each time the UP button is pressed and decremented by −1 each time the DOWN button is pressed.

```
 < TIME/DATE >

   YEAR   :99
   MONTH  :01
   DAY    :01
   HOUR   :00
  →MINUTE:00

 ■TIME/DATE SET
```

7 When the settings have been completed, press the SHIFT/ITEM button to select TIME/DATE SET and then press the UP (or DOWN) button. The time starts from when the button is pressed.

```
 ■TIME/DATE SET
```

8 When menu operations have been completed, set the MENU SET/OFF switch to OFF.
The setting menu disappears from the viewfinder screen and the displays indicating the unit’s current status appear at the top and bottom of the viewfinder screen.

<**Note**>
The seconds cannot be set and always start from 0 seconds.

Adjustments and Setup Using the Setting Menu

Adjustments and setup operations during recording are performed at the setting menu.
Setting menu operations are basically performed according to the procedures described on page 52.
However, these procedures vary slightly according to the item.
Items which can be adjusted or set up at the setting menu are as follows.

Adjustment/setup items at the setting menu

Adjustment/setup item	Page name	Operation reference
Setting the gain selector value	SETTING (LOW/MID/HIGH)	Setting the Gain Selector Value, Setting the DTL and gamma, etc.
Selecting the shutter speed/ mode to be used	SHUTTER SPEED	Setting the Electronic Shutter
Setting the synchro scan mode shutter speed	SYNCHRO SCAN	Setting the Electronic Shutter
Selecting the required VTR functions	VTR FUNCTION	Selecting Functions
Shading adjustment	AUTO SHADING	Shading Adjustment
Setup card data operations	SET UP CARD	Setup Card Operations

Setting the Gain Selector Value

When shooting in locations without sufficient brightness, bright images can be obtained by raising the gain. However, care should be taken as raising the gain also increases the noise.

The gain value for the image amplifier is selected by the GAIN switch. The gain values corresponding to the L, M and H positions of the GAIN switch are set at the MASTER GAIN page of the setting menu.

Setting the gain selector value

1 Set the MENU SET/OFF switch to the SET position while the SHIFT/ITEM button and UP button are held down together.

2 Press the PAGE button to display the MAIN menu screen 1 of 4.

3 Press the SHIFT/ITEM button to move the cursor to the position of the setting page on which the gain is to be set.

4 Press the UP or DOWN button to open the setting page.

```
  →< LOW SETTING >

 ■MASTER GAIN   : 0dB
  H.DTL LEVEL   :10
  V.DTL LEVEL   :10
  DTL CORING    :03
  H.DTL FREQ.   :03
  DARK DTL      :00
  LEVEL DEPEND. :00
  MASTER GAMMA  :0.45
 ■BLACK STRETCH:OFF
 ■MATRIX TABLE  :A
```

5 Press the SHIFT/ITEM button to move the cursor to the “MASTER GAIN” position.

6 Press the UP or DOWN button to set the gain value.
Any gain value can be set regardless of whether it is high or low from among the −3, 0, 3, 6, 9, 12, 15, 18, 21, 24 and 30 dB setting options.

To reset the gain values to their factory settings (LOW=0dB, MID=9dB, HIGH=18dB), select READ FACTORY DATA on the “INITIALIZE” SUB menu page on MAIN menu screen 4 of 4, and press the UP or DOWN button.

7 When the menu operations are completed, set the MENU SET/OFF switch to the OFF position.
The setting menu is cleared from the viewfinder screen, and the unit’s current statuses appear at the top and bottom of the viewfinder screen.

Selecting Functions

The VTR's operation functions can be selected on the "VTR FUNCTION" page of the setting menu.

To select the required functions

1 Set the MENU SET/OFF switch to the SET position while the SHIFT/ITEM button and UP button are held down together.

2 Press the PAGE button to display the MAIN menu screen 2 of 4.

3 Press the SHIFT/ITEM button to move the cursor to the "VTR FUNCTION" position.

4 Press the UP or DOWN button to open the VTR FUNCTION page.

```
→< VTR FUNCTION >

HUMID OPE    :OFF
26P CONTROL  :OFF
REC START    :NORMAL
TC MODE      :DF
UB MODE      :USER
PAUSE TIMER  :30
BATTERY SEL  :NiCd12
TCG VF DISP  :OFF
TCG SET HOLD:OFF
FIRST REC TC:REGEN
```

5 Press the SHIFT/ITEM button to move the cursor to the position of the function to be changed.

6 Press the UP (or DOWN) button to change the setting of the selected function.
If settings for other functions are also to be changed, return to step 5.

7 When menu operations have been completed, set the MENU SET/OFF switch to OFF.
The setting menu disappears from the viewfinder screen and the displays indicating the unit's current status appear at the top and bottom of the viewfinder screen.

Adjusting the White Balance

Adjusting the white balance and black balance in the order of AWB (white balance adjustment)→ABB (black balance adjustment)→AWB will provide a better picture.
The black balance does not normally need to be readjusted even when the power is turned off and then turned back on.
However, the white balance must be readjusted when the lighting conditions change.
If black balance and white balance adjustments are started when the display mode is set to “2” or “3”, messages informing of the adjustment course and results will appear on the viewfinder screen. Set the display mode to “1” to not display these messages.

- See “Display Mode and Setting Change Message” (page 61) for a description of setting the display mode.

<**Notes**>

- The white balance and black balance cannot be adjusted while the setting menu appears on the viewfinder screen. Therefore, be sure to set the MENU SET/OFF switch to OFF.
- The auto black balance (ABB) must be readjusted without fail when the MASTER GAIN value has been changed on the “LOW SETTING”, “MID SETTING” or “HIGH SETTING” SUB menu pages of MAIN menu screen 1 of 4, when the super gain setting has been changed using the SUPER GAIN button, and when the GAMMA setting (ON/OFF) on the “CAMERA SETTING” SUB menu page of MAIN menu screen 1 or 4 has been switched.
- With artificial lights, particularly with fluorescent lights and mercury-arc lamps, the strength of the R, G and B colors changes in synchronization with the power line frequency even if the brightness of these lights appears to be constant. Especially in areas where the power line frequency is 50 Hz, the vertical synchronizing frequency (approx. 60 Hz) of the NTSC and the frequency (50 Hz) of the lighting tend to interact. This gives rise to flicker and to a phenomenon where the hue changes along with the passage of time, and it is it impossible to obtain the proper white balance.
  These phenomena can be reduced by setting the shutter speed to 1/100. For this reason, wherever the unit is used under fluorescent or mercury-arc lamps and at a frequency of 50 Hz, the shutter speed must be set to 1/100 and the white balance obtained. This shutter speed of 1/100 should also be used during shooting.

1 Set the switches as shown in the figure.

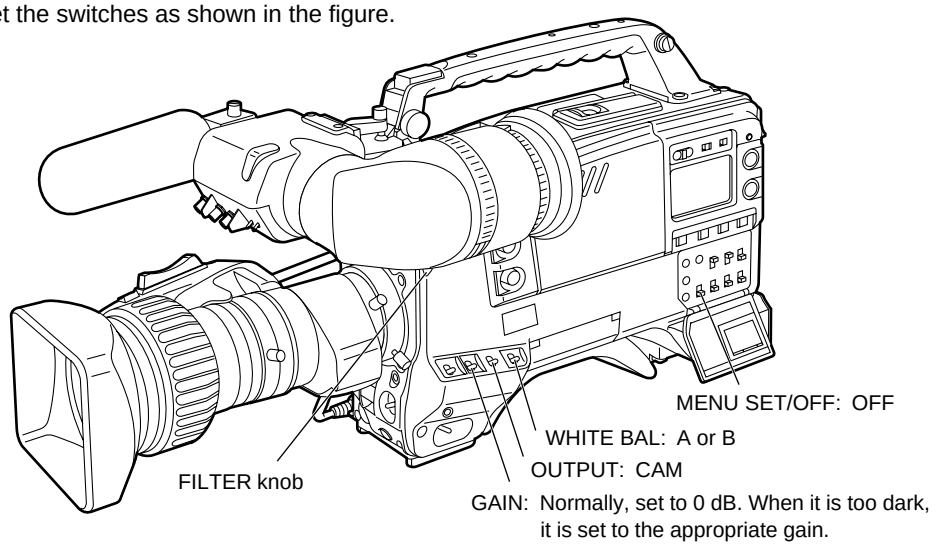

When the positions of the GAIN and WHITE BAL switches are changed, a message informing the operator of the new settings will appear on the setting change message display area of the viewfinder screen. (However, this display appears only when the display mode is set to “3”.)

2 Select the FILTER knob setting in accordance with the lighting conditions.

- Refer to the description of the ㊵ FILTER knob (page 15) in the Shooting and Recording/Playback Function Section for examples of the FILTER knob settings. If the FILTER knob setting is changed, a message informing the operator of the new setting will appear on the setting change message display area of the viewfinder screen. (However, this display appears only when the display mode is set to “3”.)

3 Place the white pattern over a location with the same conditions as the light source illuminating the subject and zoom up to project white on the screen.
A white object (white cloth, white wall) near the subject can also be used. The white area required is as shown below.

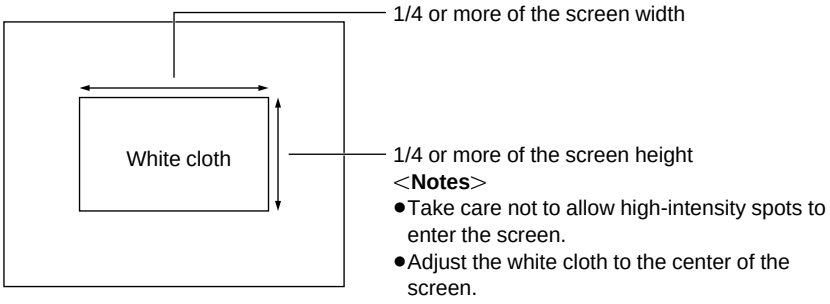

4 Adjust the iris of the lens.

5 Press the AUTO W/B BAL switch to the WHT side and release the switch.
The switch returns to the center and the white balance is automatically adjusted.

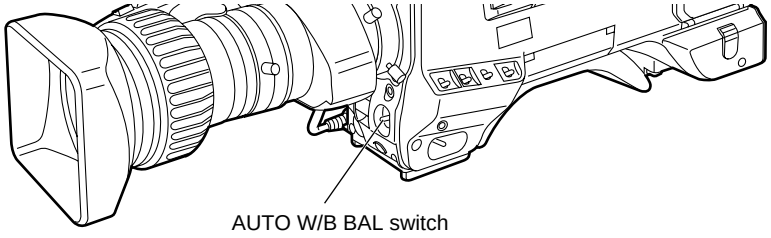

6 During the adjustment, the following message appears on the viewfinder screen.
(However, the message appears only when the display mode is set to “2” or “3”.)

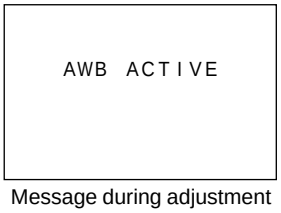

Message during adjustment

7 The adjustment is completed in several seconds (and a message such as the one shown in the figure appears).
The adjustment value is automatically stored in the memory (A or B) which was selected in step 1.

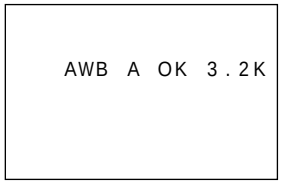

Message after adjustment is completed

8 The messages shown in the figures below will be displayed if the color temperature of the subject is lower than 2500K or higher than 5600K.
The down [↓] arrow indicates a color temperature which is lower than the one displayed; conversely, the up [↑] arrow indicates a color temperature which is higher than the one displayed.

AWB A OK 2.5K↓	AWB A OK 5.6K↑
Message displayed when color temperature is lower than 2500K	Message displayed when color temperature is higher than 5600K

<**Note**>
If a lens equipped with the automatic iris function is used, the iris may experience hunting[1]. In these cases, adjust the iris gain knob (the knob marked IG, IS, S, etc.) on the lens.
●See the Handling Instructions for the lens for a detailed description.

1) Hunting: The auto iris responds repeatedly causing the image to become darker and brighter.

When the White Balance Cannot be Automatically Adjusted

An error message will appear on the viewfinder screen.
(The message appears when the display mode is set to “2” or “3”.)
The displayed messages are as follows.

Error messages related to white balance adjustment

Error message	Meaning	Treatment
COLOR TEMP. HIGH	The color temperature is too high.	Select an appropriate filter
COLOR TEMP. LOW	The color temperature is too low.	Select an appropriate filter.
LOW LIGHT	There is insufficient illumination.	Increase the illumination or gain.
LEVEL OVER	There is too much illumination.	Decrease the illumination or gain.
UNSTABLE CONDITION	The shooting conditions are unstable (shooting is taking place under fluorescent lighting or the camera is not being held or pointed properly, etc.).	If flickering is a problem, turn the SHUTTER switch to ON and stabilize the shooting conditions.
CHECK FILTER	The CC/ND FILTER knob is not set correctly.	Set the CC/ND FILTER knob correctly.

If the above error messages appear, carry out the respective treatment attempt to adjust the white balance again.
If the error message continues to appear even after repeated attempts, consult your dealer.

<**Notes**>
- The white balance will not be adjusted while the setting menu is displayed on the viewfinder screen.
  The MENU SET/OFF switch must be set to the OFF position to make this adjustment.
- In rare instances the white balance adjustment may not be possible and an NG display will appear.
  In a case like this, proceed with the white balance adjustment again.

When there is no Time to Adjust the White Balance

Set the WHITE BAL switch to PRST.
The white balance for the filter is automatically adjusted according to the setting position of the FILTER knob (outside).

White balance memories

The white balance memories fall into two categories, A and B.
The number of A and B memories is limited to 1 each when FILTER INH is set to ON (default setting) on the “CAMERA SW MODE” SUB menu page of MAIN menu screen 2 of 4.
In this case, the contents of the memories are not linked to the filter.
However, when FILTER INH is set to OFF, the adjustments values for each filter can be automatically stored in the memory corresponding to the WHITE BAL switch setting (A or B).
The unit contains 4 filters, making a total of 8 (4×2) adjustment values which can be stored.

When the ON setting has been selected for FILTER INH

When the automatic white balance is adjusted, the color temperature and filter number at the time are displayed.
When the filter is now turned, the new color temperature and filter number are displayed.

The white balance is almost perfectly adjusted if the subject is illuminated by a light with a color temperature close to the one displayed.

(Display example)

AWB A OK 3.2K

Use filter (1) to adjust the AWB for objects with an illumination color temperature of 3200K.

↓

Change to filter (3).

5.2K(1)

"5.2K (1)" (see Note) appears on the display.

Note:
This display indicates that the AWB was adjusted using filter (1).

If the color temperature of the subject in this state is close to 5.2K, the white balance is adjusted, and so operation is now possible.

↓

Return to filter (1).

3.2K(1)

"3.2K (1)" appears on the display denoting the status when the AWB was first adjusted.

Adjusting the White Balance/Black Balance

The black balance must be adjusted in the following cases.
- When the unit is used for the first time
- When the unit is first used after an extended period of non-use
- When the unit is used under conditions where the ambient temperature has changed by a wide margin
- When the gain selector value is changed
- When the super gain setting has been changed using the SUPER GAIN button
- When the gamma ON/OFF is changed

Adjusting the Black Balance

1 Set the switches as shown in the figure.

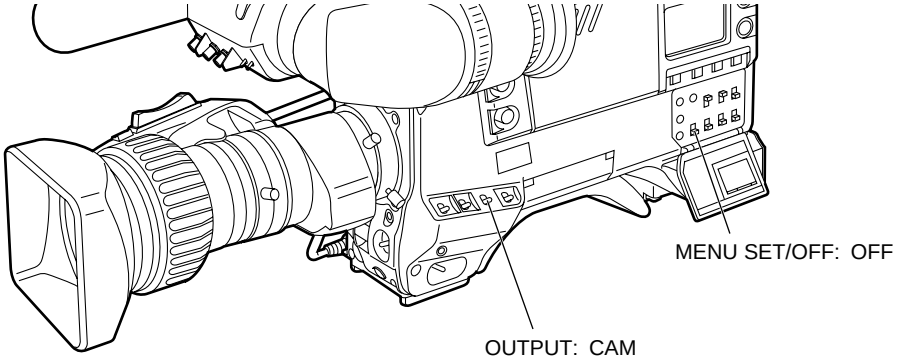

2 Press the AUTO W/B BAL switch to the ABB side and then release the switch.
The switch returns to the center and the black balance is automatically adjusted.

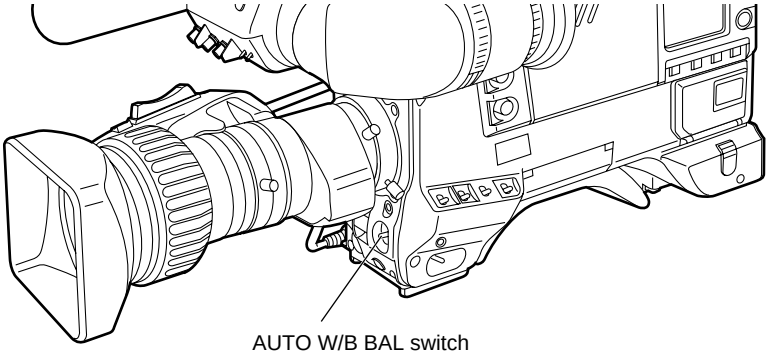

3 During the adjustment, the following message will appear on the viewfinder screen. (However, the message appears only when the display mode is set to “2” or “3”.)

ABB ACTIVE

Message during adjustment

- The lens iris automatically goes to the “CLOSE” position during the adjustment.

4 Adjustment is completed after a few seconds (the following message appears) and the adjustment value is automatically stored in the memory.

ABB OK

Message after adjustment is completed

<**Notes**>

- Check that the lens connector is connected and that the iris of the lens is set to CLOSE.
- During black balance adjustment, the iris automatically goes to the shaded status.
- During black balance adjustment, the gain selector circuit switches automatically.
  In addition, flicker and noise may appear on the viewfinder screen, but this does not indicate a malfunction.
- The black balance cannot be adjusted while the setting menu is displayed on the viewfinder screen. Therefore, be sure to set the MENU SET/OFF switch to OFF.
- If the black shading is not satisfactory even when the “ABB OK” message appears, open the “AUTO SHADING” SUB menu page of MAIN menu screen 4 of 4, and adjust the black shading. (See page 141.)
- The black shading adjustment is performed automatically when the AUTO W/B BAL switch is held down at the ABB position for 10 or more seconds.
- When the super gain is set to ON, the black balance is performed at the preset position in the white balance memory.

Shutter Modes

The shutter modes which can be used with the unit's electronic shutter and the shutter speeds which can be selected are as follows.

Shutter modes and shutter speeds which can be selected

Mode	Shutter speed	Application
Standard	1/100, 1/120, 1/250, 1/500, 1/1000 and 1/2000 (seconds)	This mode is used to shoot clear images of quickly moving subjects.
SYNCHRO SCAN	Range from 60.8 Hz to 250 Hz	This mode is used to reduce horizontal stripe patterns for monitor screens with a vertical scanning frequency of 60 Hz or more.
SUPER V		This mode is used to increase the vertical resolution.

<**Notes**>

- Increasing the shutter speed lowers the camera sensitivity regardless of electronic shutter mode.
- If the iris is set to AUTO, the iris opens and the depth of the focuses decreases as the shutter speed rises.

Setting the Shutter Mode/Speed

- The shutter speed during shutter mode and standard mode is set by the SHUTTER switch.
- During SYNCHRO SCAN mode, the shutter speed can be set beforehand at the SYNCHRO SCAN page of the setting menu. In the SYNCHRO SCAN mode, the shutter speed can easily be changed using the SYNCHRO ("+" and "−") buttons. (It can also be set using the UP or DOWN button.)
- The shutter speed selection range can be limited to the required range and whether to use special operation modes (SYNCHRO SCAN or SUPER V) can be selected at the SHUTTER SPEED page of the setting menu.

1 Set DISP MODE on the "VF DISPLAY" SUB menu page of MAIN menu screen 2 of 4 to "2" or "3" by following the steps outlined in "Changing the Display Mode" (page 62).

2 Press the SHUTTER switch from the ON position to the SEL side. The current shutter setting appears in the setting change message display position on the viewfinder screen.

Ex.: 1/120, 1/60.8, etc.

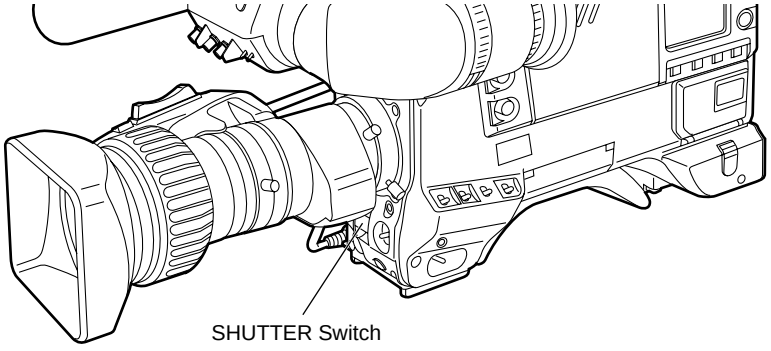

3 Press the SHUTTER switch to the SEL side repeatedly until the desired mode or speed appears. When all modes and speeds can be displayed, the display changes in the order shown below. If the required shutter speeds and modes have been designated beforehand, only the designated speeds or modes appear.

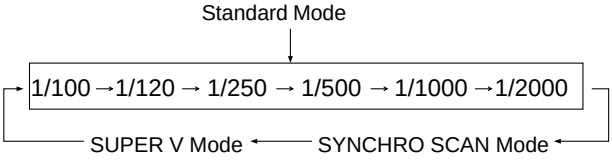

- When the unit is shipped from the factory, SUPER V mode is not specified and is therefore not displayed.

Setting the Synchro Scan Mode

1 Set the MENU SET/OFF switch to the SET position while the SHIFT/ITEM button and UP button are held down together.

2 Press the PAGE button to display the MAIN menu screen 2 of 4.

3 Press the SHIFT/ITEM button to move the cursor to the “SYNCHRO SCAN” position.

4 Press the UP or DOWN button to open the SYNCHRO SCAN page.

```
→< SYNCHRO SCAN >

      1/60.8
```

5 Press the UP (the value increases) or DOWN (the value decreases) button repeatedly to display the desired frequency. The frequency can be switched continuously within the range of 60.8 Hz to 250 Hz.

6 When menu operations have been completed, set the MENU SET/OFF switch to OFF. The setting menu disappears from the viewfinder screen and the displays indicating the unit’s current status appear at the top and bottom of the viewfinder screen.
Pressing the SYNCHRO (“+” and “−”) buttons in the SYNCHRO SCAN mode results in the same operation which is performed when the UP and DOWN buttons mentioned above are pressed.

Setting the Electronic Shutter

Changing the Shutter Speed/Mode Selection Range

The shutter speed selection range can be limited to the required range and whether to use a special operation mode can be selected at the SHUTTER SPEED page of the setting menu. The unit is set so that the SHUTTER SPEED page is not displayed when shipped from the factory. To operate the SHUTTER SPEED page, switch the unit to engineer mode or select the SHUTTER SPEED page at the MENU SELECT page beforehand.

1 Set the MENU SET/OFF switch to the SET position while the SHIFT/ITEM button and UP button are held down together.

2 Press the PAGE button to display the MAIN menu screen 2 of 4.

3 Press the SHIFT/ITEM button to move the cursor to the “SHUTTER SPEED” position.

4 Press the UP or DOWN button to open the SHUTTER SPEED page.

```
→< SHUTTER SPEED >

   *SYNCHRO SCAN
   ·SUPER V
   *1/100
   *1/120
   *1/250
   *1/500
   *1/1000
   *1/2000
```

<**Note**>
The ON/OFF status for each item is indicated by displaying an asterix (*) or period (·) in front of the item on the screen.

5 Press the SHIFT/ITEM button repeatedly to move the cursor to the position of the mode or shutter speed to be set.

6 The selected mode or speed changes from used (ON) to not used (OFF) and vice versa each time the UP (or DOWN) button is pressed.

7 When menu operations have been completed, set the MENU SET/OFF switch to OFF. The setting menu disappears from the viewfinder screen and the displays indicating the unit’s current status appear at the top and bottom of the viewfinder screen.

<**Note**>
When operating the unit from the AJ-EC3 extension control unit (option), even if the SHUTTER SPEED page is operated from the unit, the switches of the AJ-EC3 have priority regarding the actual shutter speed.

- See “Setting Menu Configuration” (page 51) for a description of engineering mode and selecting display pages.

Changing the Iris Automatic Adjustment Reference Value

To change one of the reference values, use the UP or DOWN button to change the A.IRIS LEVEL, A.IRIS PEAK/AVE and/or A.IRIS MODE value on the “GENLOCK/IRIS” SUB menu page of MAIN menu screen 3 of 4.

Adjusting the Audio Level

If the AUDIO SELECT CH1/CH2 selector switch is set to AUTO, the input levels of audio CH1 and CH2 are automatically adjusted. If are the level of audio channels 1 and 2 to be manually adjusted, perform the following operations.

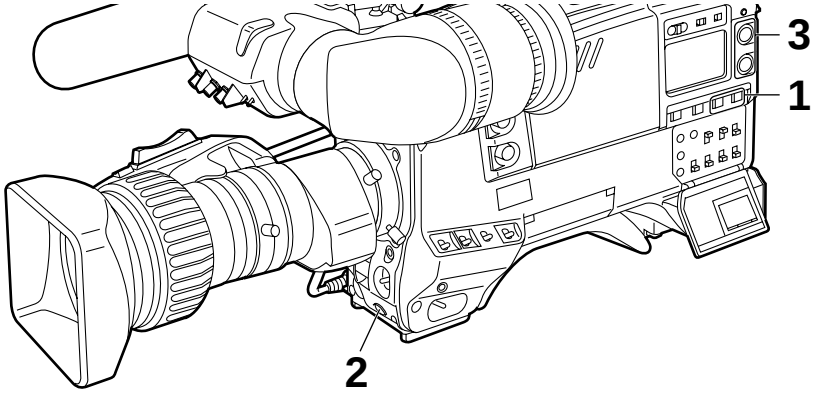

Manually Adjusting the Audio Level

1 Set the AUDIO SELECT CH1/CH2 selector switch to MAN.

2 Turn the AUDIO LEVEL CH1 control at the bottom of the front panel completely to the right.

3 Turn the AUDIO LEVEL CH1/CH2 controls to adjust the audio level so that the level meter appears up to 0 dB at the maximum volume.

Limiter

When the audio level is adjusted manually, the limiter circuit operates with respect to excessive input. The limiter circuit is turned ON or OFF on the “MIC/AUDIO” SUB menu page of MAIN menu screen 3 of 4. (The factory setting is “OFF”.)

Adjusting the Audio CH1 Level from the Viewfinder

The audio CH1 level can be adjusted by the AUDIO LEVEL CH1 control at the bottom of the front panel while watching the viewfinder.

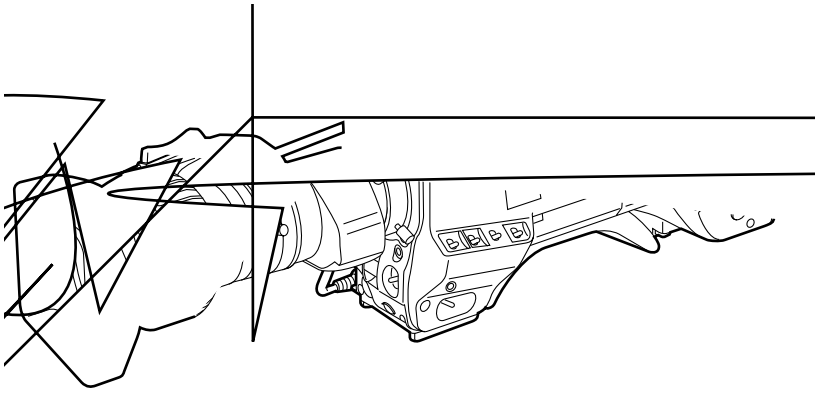

1 Set the AUDIO SELECT CH1 switch to MAN.

2 Turn the AUDIO LEVEL CH1 control on the side panel completely to the right.

3 Set LEVEL METER to “CH1” on the “VF INDICATOR” SUB menu page of MAIN menu 2 of 4. The audio level display now appears on the viewfinder screen.

4 Turn the AUDIO LEVEL CH1 control at the bottom of the front panel to adjust the input volume so that the audio level display appears as shown below.

- When the input volume is normal, the audio level display turns ON up to the seventh of the eight level display bars from the left.
- When the rightmost (0 dB) turns asterisk (*) mark, the input volume is excessive. Adjust the level so that the display bar does not turn * mark.

When the optimal level cannot be set

The maximum attenuation of the AUDIO LEVEL CH1 control at the bottom of the front panel is about 20 dB. When the optimal level cannot be set within this range, adjust the level using the AUDIO LEVEL CH1 control on the side panel.

Using the AUDIO LEVEL CH1 controls at the bottom of the front panel and on the side panel

Normally, the control at the bottom of the front panel is turned completely to the right and the recording level is adjusted using the control on the side panel.

The control at the bottom of the front panel is used to throttle the level when the input level increases suddenly during recording.

Setting the Time Code

When using both the user bit and the time code, set the user bit first. If the time code is set first, the time code generator will stop while the user bit is being set, causing the set time code to become inaccurate. The time code can be set within the range of 00:00:00:00 to 23:59:59:29.

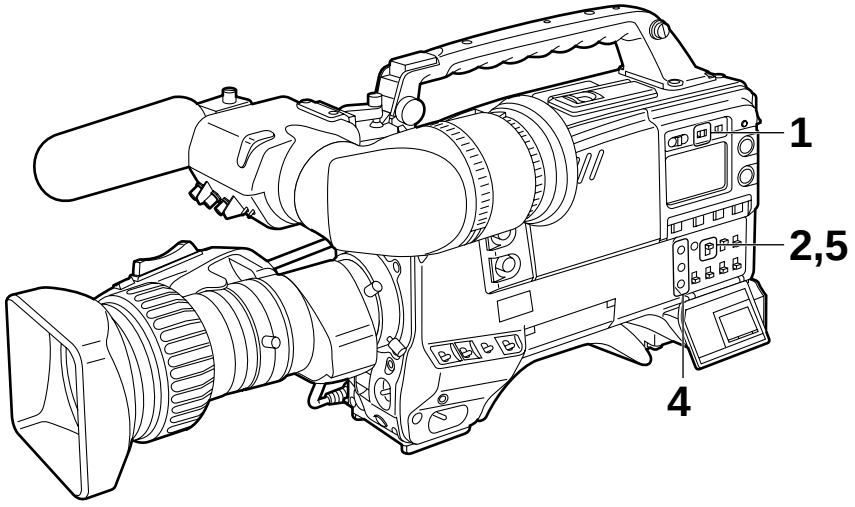

1 Set the DISPLAY switch to TC.

2 Set the TCG switch to SET.

3 Set TC MODE to “DF” or “NDF” on the “VTR FUNCTION” SUB menu page of MAIN menu 2 of 4. Select DF when the time code is to be advanced during drop frame mode, and NDF when the time code is to be advanced during non-drop frame mode.

4 Set the time code using the SHIFT/ITEM, UP and DOWN buttons.

SHIFT/ITEM button:	This is used to cause the digit which is to be set to flash. Each time it is pressed, the flashing digit moves to the right.
UP button:	This increments by 1 the figure of the flashing digit.
DOWN button:	This decrements by 1 the figure of the flashing digit.

5 Set the TCG switch.
Set the switch to F-RUN when the time code is to be advanced regardless of the VTR’s operation.
Set the switch to R-RUN when the time code is to be advanced only while recording is in progress.

Time code status during battery replacement
The back-up mechanism functions even while replacing the battery to allow the time code generator to continue operating for extended periods of time (approx. 1 year).

<**Note**>
The time code backup accuracy is approx. +/−2 frames when the POWER switch is set to ON, OFF and back ON.

Setting the User Bit

Setting the user bit allows up to 8 digits of hexadecimal data such as memos (date, time), etc. to be recorded in the sub code track.

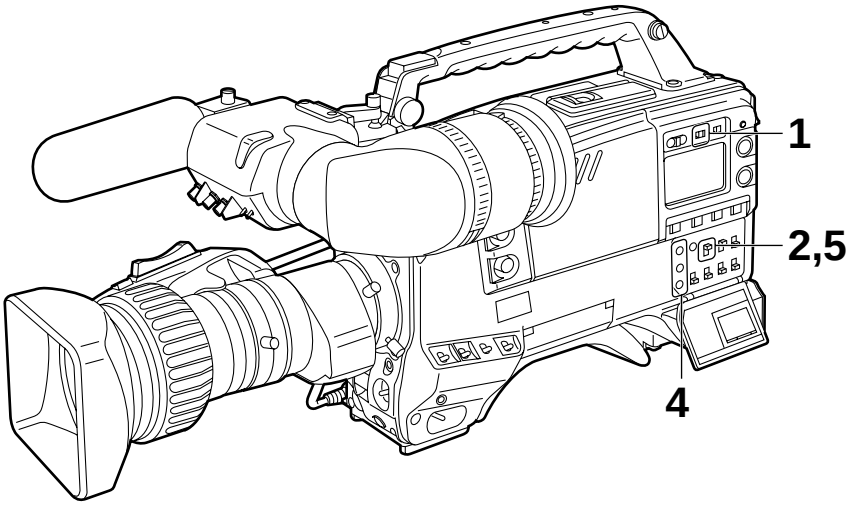

1 Set the DISPLAY switch to UB.

2 Set the TCG switch to SET.

3 Select UB MODE on the “VTR FUNCTION” SUB menu page of MAIN menu 2 of 4.

4 Set the user bit using the SHIFT/ITEM, UP and DOWN buttons.

SHIFT/ITEM button: This is used to cause the digit which is to be set to flash. Each time it is pressed, the flashing digit moves to the right.

UP/DOWN buttons: These increment/decrement by 1 the figure of the flashing digit.

The hexadecimal characters A to F appear as follows.

Hexadecimal	A	B	C	D	E	F
Display	A	b	C	d	E	F

5 Set the F-RUN/R-RUN switch to F-RUN or R-RUN.

User bit memory function

The user bit setting (except for the real time) is automatically stored in the memory and held even after the power is turned off. However, care should be taken as the settings are not stored in the memory if the time from when the power was turned on until the setting operations are completed and the power is turned off is less than 20 seconds.

<**Notes**>

- When REAL has been selected for UB MODE, the values set for HOUR and MINUTE on the TIME/DATE page apply.
- Whatever is on the LCD display will be held on the display when the MENU SET/OFF switch is set to the SET position while “REAL” is set for the UB MODE and the DISPLAY switch is at the UB position.

ti D

vin Co al Sou

of the VTR sect

nections for e

he time code to a

R nal

Exam

ch to ON.

l.

nce video signals, whose phases correlate in a way
he TC IN and GENLOCK IN/(VIDEO IN) connectors,

This locks the built-in time code generator to the reference time code. After about 10 seconds have passed since the time code generator was locked, the external lock status is maintained even if the external reference time code is disconnected. However, if the reference time code is disconnected during recording (REC), the servo lock will be thrown out of order.

<**Note**>
When the external locking operation is performed, the time code is locked instantly to the external time code and the same value as the external code value appears in the counter display position. Do not set the VTR to recording mode for several seconds until the sync generator has stabilized.

Setting Time Data

User bit setting during external locking
When the time code is locked to an external source, only the time data is locked to the time data of the time code from the external source. Accordingly, the user bit can be set independently for each unit. The user bit can also be locked to the user bit of the time code from the external source.
●Consult your dealer for a detailed explanation.

Releasing the external lock
Stop supplying the external time code and then set the F-RUN/R-RUN switch to R-RUN.

Switching the power supply from the battery to an external power supply during external locking
In order to maintain power supply continuity for the time code generator, connect the external power supply to the DC IN connector before unplugging the battery pack. If the battery pack is unplugged first, the external locking continuity of the time code cannot be assured.

Synchronizing the camera section to an outside source during external locking
During external locking, the camera section is genlocked by the reference video signal which is supplied to the GENLOCK IN/(VIDEO IN) connector.

Using the user data

The setting menu contents can be saved in the user area of the camera's memory so that they can be loaded as and when required. This data enables the suitable setup statuses to be re-established without delay.

User data operation

A menu is used to save the data settings in the user area of the camera's memory or to load them.

Saving the user data
1 The menu's INITIALIZE screen is used to save the user data.
2 Set the MENU SET/OFF switch to the SET position while the SHIFT/ITEM button and UP button are held down together.
3 Press the PAGE button to display the MAIN menu screen 4 of 4.
4 Press the SHIFT/ITEM button to move the cursor to the "INITIALIZE" position.
5 Press the UP or DOWN button to open the INITIALIZE page.
When the SHIFT/ITEM is pressed to align the arrow with WRITE USER DATA and the UP or DOWN button is pressed, the data settings will be saved in the user area of the camera's memory.
6 After the settings have been saved, set the MENU SET/OFF switch to the OFF position.

Loading the user data
1 The menu's CARD READ/WRITE screen is used to set the unit to the status in which the data settings were saved in the user area of the camera's memory.
2 Set the MENU SET/OFF switch to the SET position while the SHIFT/ITEM button and UP button are held down together.
3 Press the PAGE button to display the MAIN menu screen 3 of 4.
4 Press the SHIFT/ITEM button to move the cursor to the "CARD READ/WRITE" position.
5 Press the UP or DOWN button to open the CARD READ/WRITE page.
Press the SHIFT/ITEM to align the arrow with READ USER DATA, and press the UP or DOWN button.
The data settings, which were saved in the user area of the camera's memory, are now loaded, and the settings are completed.
6 Set the MENU SET/OFF switch to the OFF position.

Setup Card Operations

Setting menu contents can be stored using setup memory cards (SHL-064HSRVS, option). This data can then be used to quickly recreate the appropriate setup conditions. Subject data, etc. can also be stored on setup cards. See the Setup Card Application Instructions for a detailed description.

- Optional cards include the general purpose memory card (SRAM 64KB or more) which is used as the setup card and the ATA flash memory card (4MB or more) which is used for the Picture Link function. (However, the AJ-YAP900 Picture Link adaptor board, which is available as an optional accessory, is required when using the ATA flash memory card.)

Setup Card Handling

Ejecting setup cards

Lift up on the lower edge of the cover to open the cover and remove the setup card.

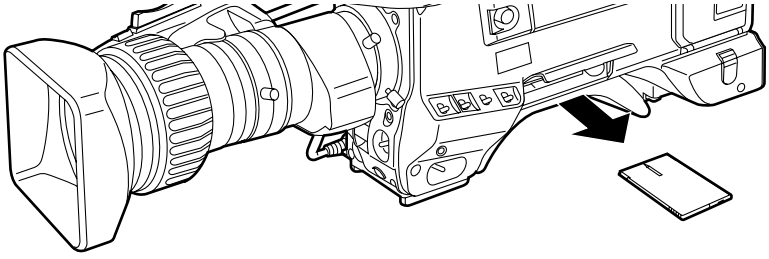

<**Note**>

Take care not to touch the connectors at the front of the setup card.

Inserting setup cards

Position the unit so that the panel with the logo faces you, insert the setup card into the setup card insertion slot and then close the cover.

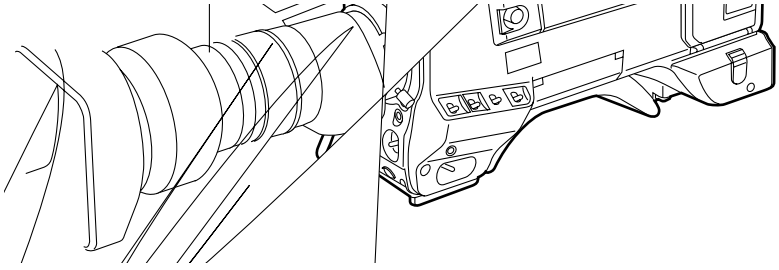

<**Note**>

Check that the unit is positioned with the logo facing you and that the characters are facing the correct direction, and then insert the card. Be sure to insert the card in the correct direction. If the card is difficult to insert, the card may be backwards or upside-down. In these cases, do not attempt to force in the card, but check whether the card is backwards or upside-down and then reinsert the card.

Usage and storage precautions

The following points should be observed when using and storing setup cards.

- Avoid high temperatures and humidity.
- Do not expose setup cards to water.
- Avoid electrostatic charges.

Store setup cards inserted in the unit with the cover closed.

Setup Card Data Operations

Operations to store setting data on setup cards and read out stored data are performed at the "CARD READ/WRITE" SUB menu page of MAIN menu screen 2 of 4.
<**Note**>
When operating the unit with a remote controller, the CARD READ/WRITE page cannot be operated from the unit.

Formatting setup cards

1 Set the MENU SET/OFF switch to the SET position while the SHIFT/ITEM button and UP button are held down together.

2 Press the PAGE button to display the MAIN menu screen 3 of 4.

3 Press the SHIFT/ITEM button to move the cursor to the "CARD READ/WRITE" position.

4 Press the UP or DOWN button to open the CARD READ/WRITE page.

```
→< CARD READ/WRITE >

 READ
  SELECT          1
 WRITE
  SELECT          1
 CARD CONFIG
 READ USER DATA
```

5 Press the SHIFT/ITEM button repeatedly to move the cursor to the CARD CONFIG. position.

6 A menu shown below appears when the UP (or DOWN) button is pressed.

```
  < CARD READ/WRITE >

  READ
   SELECT          1
  WRITE
   SELECT          1
 →CARD CONFIG
  READ USER DATA



  CONFIG?(Y:UP.N:DOWN)
```

7 Press the UP button to format the set up card. When the setup card has been formatted, the message shown below appears.
<**Note**>
When setup cards are formatted, the setting conditions at that time are also input simultaneously.

```
  < CARD READ/WRITE >

  READ
   SELECT          1
  WRITE
   SELECT          1
 →CARD CONFIG
  READ USER DATA

     FORMAT OK
```

8 When menu operations have been completed, return the MENU SET/OFF switch to OFF. The setting menu disappears from the viewfinder screen and the displays indicating the unit's current status appear at the top and bottom of the viewfinder screen.

When data is not written

If the following error messages appear when the UP button is pressed in step 7, the data is not written.

Data format error messages

Error message	Condition	Countermeasure
WRITE PROTECT	The write protect switch on the side of the card is set to ON.	Set the write protect switch on the side of the card to OFF.
NO CARD	A setup card is not inserted.	Insert a card.
ERROR	The disk cannot be formatted.	The card may be defective. Replace the card.

Writing set data to cards

1 Set the MENU SET/OFF switch to the SET position while the SHIFT/ITEM button and UP button are held down together.

2 Press the PAGE button to display the MAIN menu screen 3 of 4.

3 Press the SHIFT/ITEM button to move the cursor to the “CARD READ/WRITE” position.

4 Press the UP or DOWN button to open the CARD READ/WRITE page.

```
→< CARD READ/WRITE >

 READ
  SELECT         1
 WRITE
  SELECT         1
 CARD CONFIG
 READ USER DATA
```

5 Press the SHIFT/ITEM button repeatedly to move the cursor to the WRITE position.

6 A menu shown below appears when the UP (or DOWN) button is pressed.

```
  < CARD READ/WRITE >

  READ
   SELECT         1
 →WRITE
   SELECT         1
  CARD CONFIG
  READ USER DATA



  WRITE?(Y:UP.N:DOWN)
```

7 Press the UP button to write data on the set up card. When writing is complete, the message shown below appears.

```
  < CARD READ/WRITE >

  READ
   SELECT         1
 →WRITE
   SELECT         1
  CARD CONFIG
  READ USER DATA

     WRITE OK
```

8 When menu operations have been completed, return the MENU SET/OFF switch to OFF. The setting menu disappears from the viewfinder screen and the displays indicating the unit’s current status appear at the top and bottom of the viewfinder screen.

Protecting stored data

If the setup card's WRITE PROTECT switch is set to ON, data is not rewritten even if the UP button is pressed in step 7.

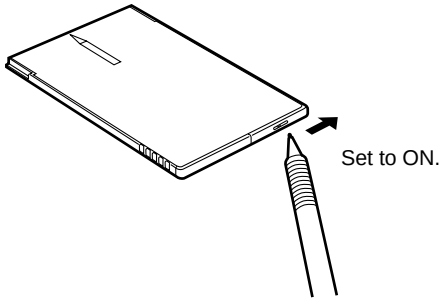

When data is not written

If the following error messages appear when the UP button is pressed in step 7, the data is not written.

Data writing error messages

Error message	Condition	Countermeasure
NO CONFIG	The setup card is not formatted.	Format the card.
NO CARD	A setup card is not inserted.	Insert a card.
WRITE PROTECT	The write protect switch on the side of the card is set to ON.	Set the write protect switch on the side of the card to OFF.
ERROR	Data cannot be written on the card.	The card may be defective. Replace the card.

Reading out data stored on cards

1 Set the MENU SET/OFF switch to the SET position while the SHIFT/ITEM button and UP button are held down together.

2 Press the PAGE button to display the MAIN menu screen 3 of 4.

3 Press the SHIFT/ITEM button to move the cursor to the “CARD READ/WRITE” position.

4 Press the UP or DOWN button to open the CARD READ/WRITE page.

5 Press the SHIFT/ITEM button to move the cursor to the “READ” position.

6 Press the UP (or DOWN) button. A message such as the one shown in the figure below appears on the screen.

```
  < CARD READ/WRITE >

 →READ
   SELECT          1
  WRITE
   SELECT          1
  CARD CONFIG
  READ USER DATA



  READ?(Y:UP.N:DOWN)
```

7 Press the UP button to read data from the set up card. When readout is complete, the message shown below appears.

```
  < CARD READ/WRITE >

 →READ
   SELECT          1
  WRITE
   SELECT          1
  CARD CONFIG
  READ USER DATA

     READ OK
```

8 When menu operations have been completed, set the MENU SET/OFF switch to OFF. The setting menu disappears from the viewfinder screen and the displays indicating the unit’s current status based on the data read out from the setup card appear at the top and bottom of the viewfinder screen.

When data is not read out

If the following error messages appear when the UP button is pressed in step 7, the data is not read out.

Data readout error messages

Error message	Condition	Countermeasure
NO CONFIG	The setup card is not formatted.	Format the card.
NO CARD	A setup card is not inserted.	Insert a card.
ERROR	Data cannot be read out.	Data written by devices other than this unit cannot be read out.

Inserting and Ejecting Cassettes

Inserting cassettes

1 Check that there are no cables, etc. around the cassette holder and the top panel and then set the POWER switch to ON.

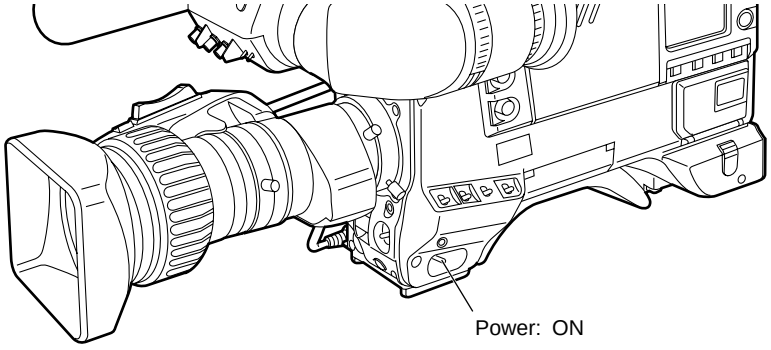

If condensation has occurred inside the unit, the HUMID display lights. In these cases, wait until the display goes off before proceeding to step 2.

2 Press the EJECT button. The cassette holder opens.

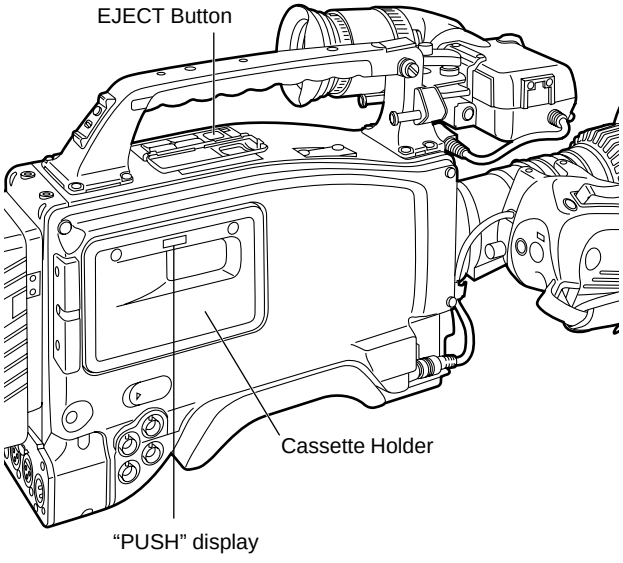

3 Check there is no slack in the tape, insert the cassette, then press the “PUSH” display on the cassette holder to close the cassette holder firmly.

Checking that there is no slack in the tape

Press the reel in with your finger and turn it lightly in the direction of the arrow. If the reel does not turn, there is no slack in the tape.

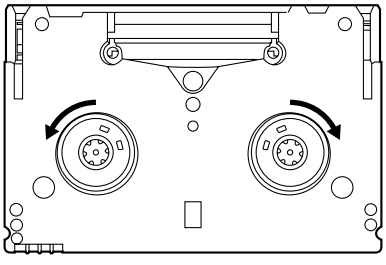

Ejecting cassettes

With the power turned on, press the EJECT button to open the cassette holder and eject the cassette. If a cassette is not to be inserted immediately after ejecting the cassette, close the cassette holder.

Ejecting cassettes when the battery has run out

Set the POWER switch to OFF to turn off the power, then turn on the power again and immediately hold down the EJECT button. If there is still power remaining in the battery, the cassette will be ejected. However, this operation should not be repeated.

Preventing Accidental Erasure

Set the tab on the cassette to the SAVE side to prevent the recorded contents of tapes from being accidentally erased.

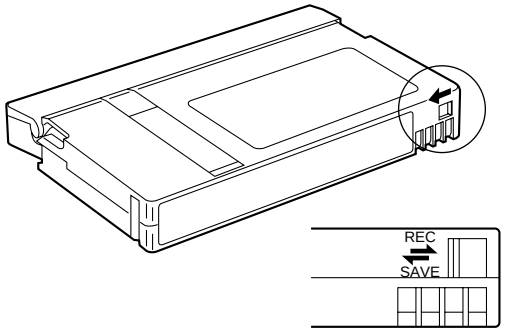

Recording

Basic Procedures

This section describes the basic operating procedures for shooting and recording. When starting to shoot actual images, inspect the unit beforehand to check that all systems are functioning normally.

- See the “Inspections Before Shooting” (page 153) for a description of inspection procedures.

Procedures from power supply preparations to inserting a cassette

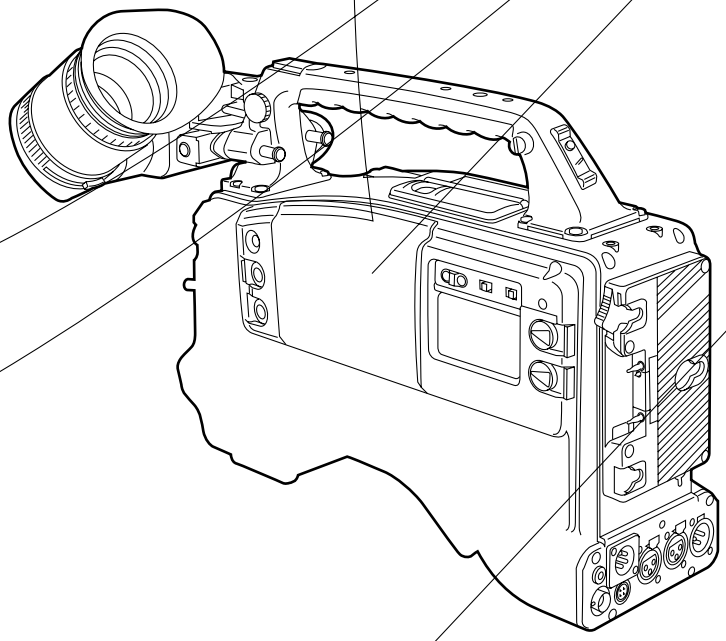

1 Insert a charged battery pack.

2 Set the POWER switch to ON and check that the HUMID display does not appear and that five or more bars of the remaining battery level display are lighted.
- If the HUMID display appears, wait until the display goes off.
- If five or more bars of the remaining battery level display are not lighted, replace the battery pack with a sufficiently charged battery pack.

3 Check that there are no cables, etc. around the cassette holder and top panel and then press the EJECT button to open the cassette holder.

4 Check the following items, and then insert a cassette and close the cassette holder.
- The cassette is not set to write protect status.
- There is no slack in the tape.

Procedures from adjusting the white balance and black balance to stopping recording

Turn on the power, insert a cassette, and then set the various switches as follows.

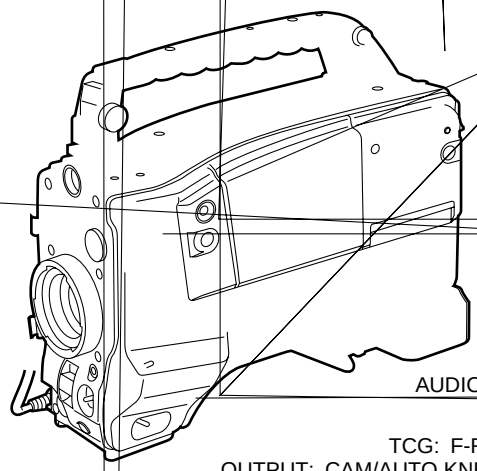

AUDIO SELECT CH1/CH2: AUTO

TCG: F-RUN or R-RUN

OUTPUT: CAM/AUTO KNEE ON

GAIN: Normally, set to 0 dB. When it is too dark, it is set to the appropriate gain.

Iris: AUTO

Shooting images

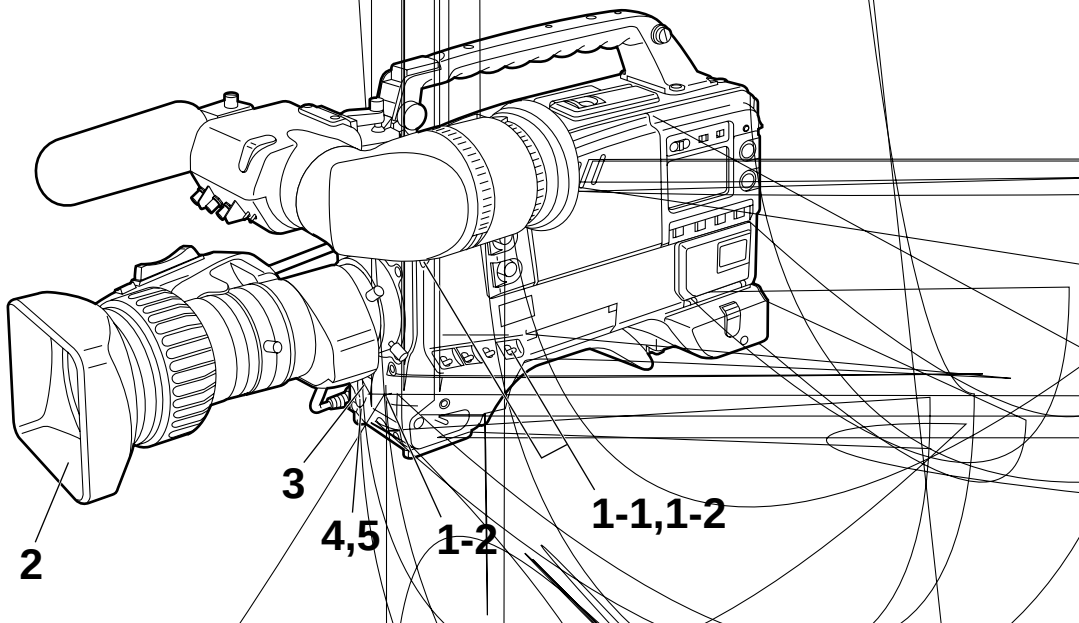

1-1 Select the filter in accordance with the lighting conditions, and when the white balance has already been stored in the memory, set the WHITE BAL switch to “A” or “B”.
When the white balance and black balance have not been stored in the memory and there is no time to adjust the white balance:
Set the WHITE BAL switch to PRST and the FILTER knob to “1”.
A 3200K white balance is now achieved.

1-2 To adjust the white balance on site, select the filter which corresponds with the lighting conditions, set the WHITE BAL switch to “A” or “B”, and adjust the white balance by following the steps below.
(1) Press the AUTO W/B BAL switch to the AWB side to adjust the white balance.
(2) Press the AUTO W/B BAL switch to the ABB side to adjust the black balance.
(3) Press the AUTO W/B BAL switch to the AWB side to adjust the white balance.
For details on how to adjust the white balance, read through the section entitled “Adjusting the white balance/black balance” (page 70).

2 Aim the camera at the subject and adjust the focus and zoom.

3 When using the electronic shutter, set the shutter speed and operation mode.
●See “Setting the Electronic Shutter” (page 77) for a detailed description.

4 Press the VTR START button of the unit or the VTR button of the lens to start recording. The REC lamp inside the viewfinder lights during recording.

5 Press the VTR START button again to stop recording. The REC lamp inside the viewfinder goes off.

Tape operation buttons
The tape operation buttons (EJECT, REW, FF, PLAY/PAUSE and STOP) do not function during recording.

Successive Shooting

Successive shooting with an accuracy of within 0–+1 frame can be performed simply by pressing the VTR START button of the unit or the VTR button of the lens while recording is paused.

While recording is paused

The unit automatically searches for the successive shooting point. However, the time until recording starts differs according to the setting of the VTR SAVE/STBY switch.

- If the VTR SAVE/STBY switch is set to SAVE, recording starts about 2 seconds after the VTR START button is pressed.
- If the VTR SAVE/STBY switch is set to STBY, recording starts immediately after the VTR START button is pressed.

Successive shooting when the power is turned off while recording is paused

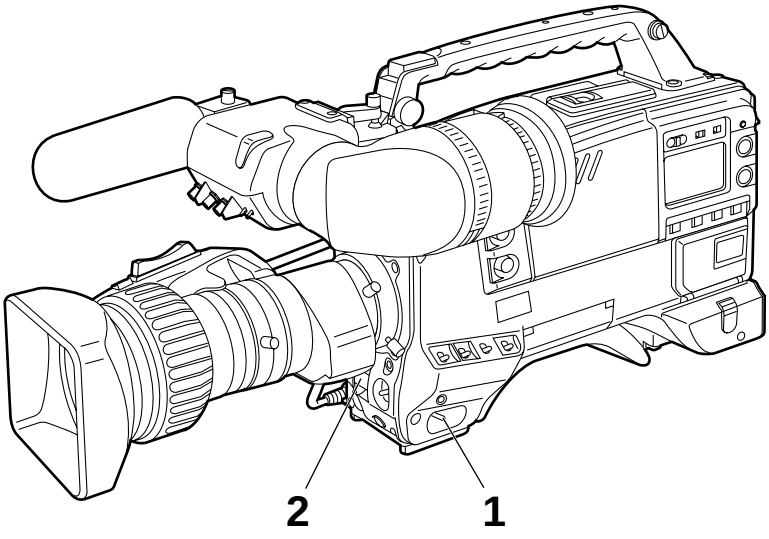

1 Turn the power back on.

2 Press the VTR START button of the unit or the VTR button of the lens to start recording.

Successive Shooting in Other Cases

If successive shooting is to be performed after the tape has been run, the cassette has been ejected, or when using a tape which has only been recorded part-way, follow the procedures outlined below.

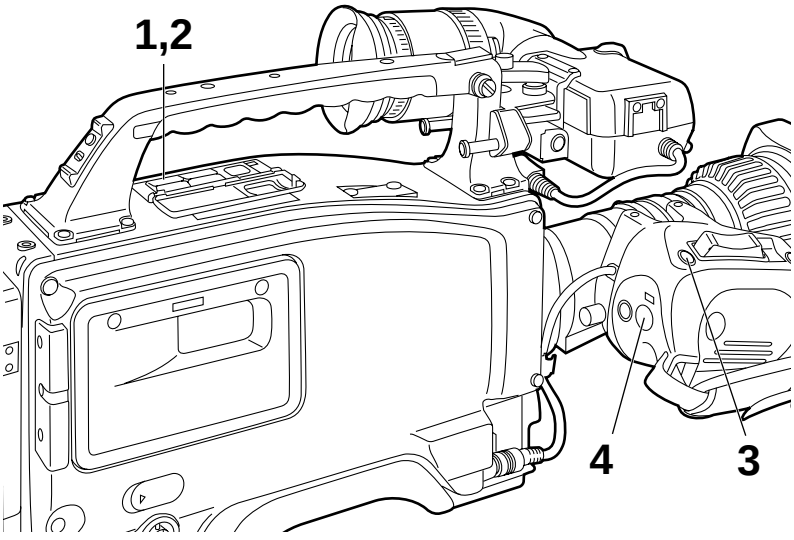

1 While monitoring the viewfinder screen, press the PLAY/PAUSE button to play back the tape.

2 At the place where a new recording is to continue on from the existing recording, press the PLAY/PAUSE (or STOP) button again to stop the tape.

3 Press the RET button on the lens. Preparations for frame-to-frame continuity are made about two seconds later.

4 Press the VTR START button of the unit or the VTR button of the lens to start recording.

Pressing the PLAY/PAUSE button allows black-and-white images to be viewed on the viewfinder screen. Playback images can also be viewed in two other ways.

- **Rec review:** When the RET switch has been set to “REC CHECK” on the “REC (ASPECT)/PB/RET” setting menu, it is possible to view the last two seconds of the recording in the form of black-and-white images on the viewfinder screen.
- **Color playback:** Connecting a color monitor to the unit’s VIDEO OUT connector allows color playback images to be viewed on the monitor.

The playback signal is output to the viewfinder even during rewind (REW) and fast forward (FF). Audio output selection and volume adjustment for the playback signal are performed by the MONITOR switches and knobs on page 13.

Rec Review

If recording is paused and the RET button on the lens is pressed, the tape is automatically rewound and the playback images for the last two seconds appear on the viewfinder. This allows the recording status to be checked.
After playback, the unit returns to the recording start standby status. Holding down the RET button rewinds and plays back up to 10 seconds of the tape.

<**Note**>
The rec review function cannot be used unless recording has been performed for more than 1 second.

Color Playback

Connecting a color monitor to the VIDEO OUT connector of the unit allows color playback images to be viewed on the monitor.

Connection With an External VTR

The unit is equipped with an interface which enables recording to be performed by an external VTR.

- Mounting the AJ-YA900P 26-pin/12-pin output adaptor (option) and connecting the 26-pin cable (option) to the unit allows recording to be performed by the VTR section (internal VTR) of the unit and an external VTR. The component video signal is output from the 26-pin interface.

Precautions When Connecting an External VTR

- Set 26P CONTROL on the “VTR FUNCTION” setting menu to “BOTH” or “ON”.
  (The factory setting is “OFF”.)
- Set SW201 on the CAM ENC board to ON. (Before the unit was shipped from the factory, this switch was set to OFF.)

Power supply

Power is not supplied or received between the unit and the external VTR, so special power supplies should be provided for each unit. The BATT lamp and remaining battery level display function inside the viewfinder indicate the power supply status only for the internal VTR. The power supply status for the external VTR should be checked at the external VTR.

TALLY lamp and REC lamp operation

The unit’s TALLY lamp and the REC lamp inside the viewfinder indicate the REC status of the unit when 26P CONTROL is set to BOTH. When 26P CONTROL is set to ON, these lamps indicate the REC status of the external VTR.

Warning tone

External VTR-related warning tones are not output from the unit’s speaker or PHONES jack.

Note on connecting cables

The signals may not be connected properly with some cables.
The signal assignments for the 26-pin/12-pin output adaptor AJ-YA900P (optional) are shown in the following table. Use this table as a reference for connection with an external VTR.

Pin No.	Signal	Pin No.	Signal
1	Composite video signal	9	CAM MIC (H)
2	Composite video GND	10	CAM MIC (C)
3	Y GND	11	CAM MIC (GND)
4	Y signal	12	VTR START/STOP
5	P_R signal	15	REC TALLY
6	P_R GND	18	RET VIDEO
7	P_B signal	19	RET VIDEO GND
8	P_B GND	B	GND

Recording Simultaneously with the Internal VTR and an External VTR

Connections

Mount the AJ-YA900P 26-pin/12-pin output adaptor (option) to the unit, connect the external VTR with the 26-pin cable, and set the audio input level selector switch of the external VTR to "−60 dB".
SW201 on the CAM ENC Printed Circuit Board of the unit must be set to ON side.
(See page 104.)

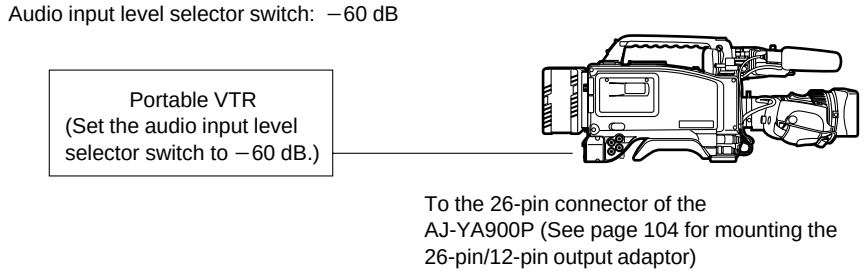

Checking the Function Settings

Check that the function to control the 26-pin interface has been set to "BOTH" or "ON" on the "VTR FUNCTION" SUB menu page of the MAIN menu screen 2 of 4. See "Selecting Functions" for a description of the various function settings.

Starting Recording

1 Operate the external VTR and set it to recording paused status.

2 Press the VTR START button of the unit or the VTR button of the lens. The internal and external VTRs start recording simultaneously. Pressing the button again sets both VTRs to the recording paused status.

If One VTR Comes to the End of its Tape During Recording

Even if one VTR comes to the end of its tape and stops, the other VTR continues recording operation.

Returning the VTRs to simultaneous recording status

- If the internal VTR came to the end of its tape, replace the cassette and press the VTR START button of the unit or the VTR button of the lens. The external VTR continues recording operation during this time.
- If the external VTR came to the end of its tape, replace the cassette and operate the external VTR to restart recording. The internal VTR continues recording operation during this time.

<**Note**>
Care should be taken as the internal VTR will assume recording paused status if the VTR START button of the unit or the VTR button of the lens is pressed after replacing the external VTR's cassette.

Functions of the Unit's VTR SAVE/STBY Switch

Tape running mode

Pressing the unit's STOP, REW or FF buttons sets the internal VTR to stop, rewind or fast forward modes, respectively. However, the external VTR is set to recording paused status in all cases.

Viewing playback images on the viewfinder

Pressing the PLAY/PAUSE button allows black-and-white images from the tape of the internal VTR to be viewed on the viewfinder screen.

To view return images of an external VTR on the viewfinder screen, set RET SW on the "REC (ASPECT)/PB/RET" SUB menu page to "CAM RET", and press the RET button on the lens.

Using the 26-pin/12-pin Output Adaptor

Connections

The method of connecting the external VTR is the same as that described in “Recording Simultaneously with the Internal VTR and an External VTR”.

●See “Connections” on page 101.

Mounting the 26-pin/12-pin output adaptor

●Consult your local dealer when mounting the adaptor.

1 Set the unit’s internal switches.

1 Remove the side panel on the display window side.

2 Remove the printed circuit board holder, and take out the CAM ENC (2) printed circuit board.

3 Set SW201 to the ON side.

4 Take out the SYNC (3) printed circuit board.

5 Set SW1 (26PIN) to the ON side.

6 To set the audio level to −20 dB, set the SW4701 DIP switch accordingly.

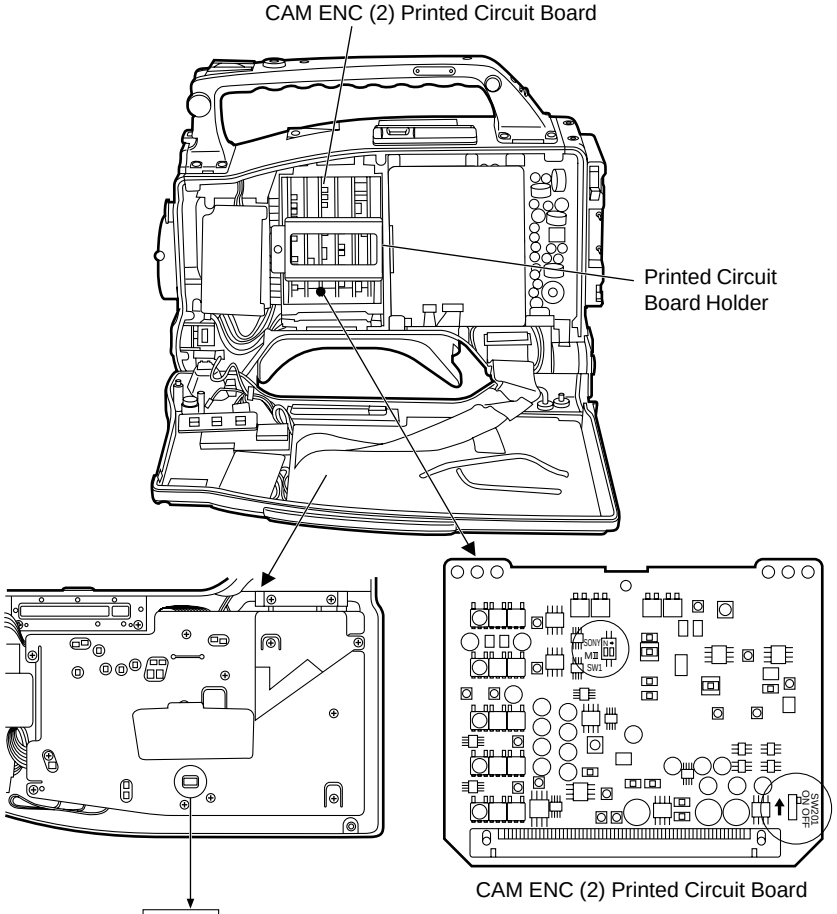

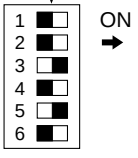

SW4701

Pin No.	−60 dB (default setting)	−20 dB
1	Not used	
2	ON (NR ON/OFF)	
3	ON	OFF
4	OFF	ON
5	ON	OFF
6	OFF	ON

2 Mount the 26-pin/12-pin output adaptor.

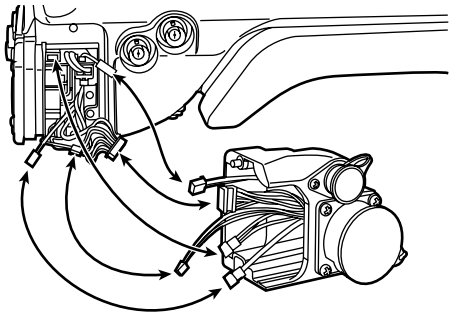

Controlling the external VTR with the unit's switches

Setting the 26P CONTROL function as indicated below on the "VTR FUNCTION" SUB menu page of the MAIN menu screen 2 of 4 prevents the internal VTR from being operated and enables only the external VTR to be controlled by the VTR START button on the unit or by the VTR button on the lens.

- 26P CONTROL: ON
- See "Selecting Functions" (page 69) for a description of the VTR FUNCTION page operations.

Switching from the internal VTR to the external VTR

If the internal VTR should develop a problem (such as an entangled tape or condensation) during operation and it can no longer be operated, the VTR START button on the unit and the VTR button on the lens will cease to function.

In these cases, it will be possible to operate the external VTR in place of the internal VTR using the VTR START button on the unit and the VTR button on the lens if the 26P CONTROL function on the VTR FUNCTION page is set as indicated above.

Starting recording

Operate the external VTR to set it to recording paused status and press the VTR START button of the unit or the VTR button of the lens. The external VTR starts recording. Pressing the button again sets the VTR to the recording paused status.

Output level of the 26-pin/12-pin output adaptor

The output level factory settings are −60 dBu/balanced for audio and SONY level for component video. When the built-in SW4701 switch is set, the audio output level can be changed to −20 dBu/unbalanced, and when both 1 and 2 of SW1 are set to ON, the component video output level can be changed to the MII level. (See previous page)

RET Button

The images recorded on the VTR or the return video signals which have been supplied to the GENLOCK IN/(VIDEO IN) connector can be viewed on the viewfinder screen either when the RET (return) button is pressed or while it is held down.
What appears on the viewfinder screen differs as shown in the table below depending on the RET SW setting selected on the “REC (ASPECT)/PB/RET” SUB menu page of MAIN menu page 3 of 4 and on the VTR status.
<**Note**>
However, when VIDEO has been selected as the REC SIGNAL setting on the “REC (ASPECT)/PB/RET” SUB menu page (when externally input signals are recorded), the external input will appear on the viewfinder screen except while the RET button is held down: in the latter case, the camera image will appear instead on the viewfinder screen.

■ **Lens RET button functions**

RET switch setting	Internal VTR mode	Description of what appears on viewfinder screen
REC CHECK	Recording	Images shot by camera. RET button does not function.
	Recording paused	What has been recorded (2-second rec review) can be checked.
	Playing	Internal VTR’s playback images. RET button does not function.
	Playback paused	Search operation for successive shooting.
CAM RET	Recording	Return video signal which has been supplied to GENLOCK IN/(VIDEO IN) connector.
	Recording paused	Return video signal which has been supplied to GENLOCK IN/(VIDEO IN) connector.
	Playing	Picture played back by internal VTR (RET button does not function).
	Playback paused	Still picture played back by internal VTR.
MARK*	Recording	Switch functions as the MARK switch for the Picture Link function.
	Recording paused	Switch functions as the MARK switch for the Picture Link function.
	Playing	Picture played back by internal VTR (RET button does not function).
	Playback paused	Still picture played back by internal VTR (RET button does not function).

*This is displayed when the Picture Link adaptor board (AJ-YAP900, optional accessory) has been installed.
When the RET SW has been set to the REC CHECK mode and this board has been installed, this switch will operate as the TAKE function for the Picture Link operation while recording is in progress.

Replacing the Backup Battery

The unit is shipped from the factory with a backup battery already mounted. When the battery runs out, the TCG time code value indicates 00:00:00:00.
At this time, the time code value cannot be backed up.
In addition, the “BACK UP BATT EMPTY” display appears in the viewfinder for 3 seconds when the POWER switch is set to ON to indicate that the battery must be replaced.
Consult your dealer when replacing the battery.

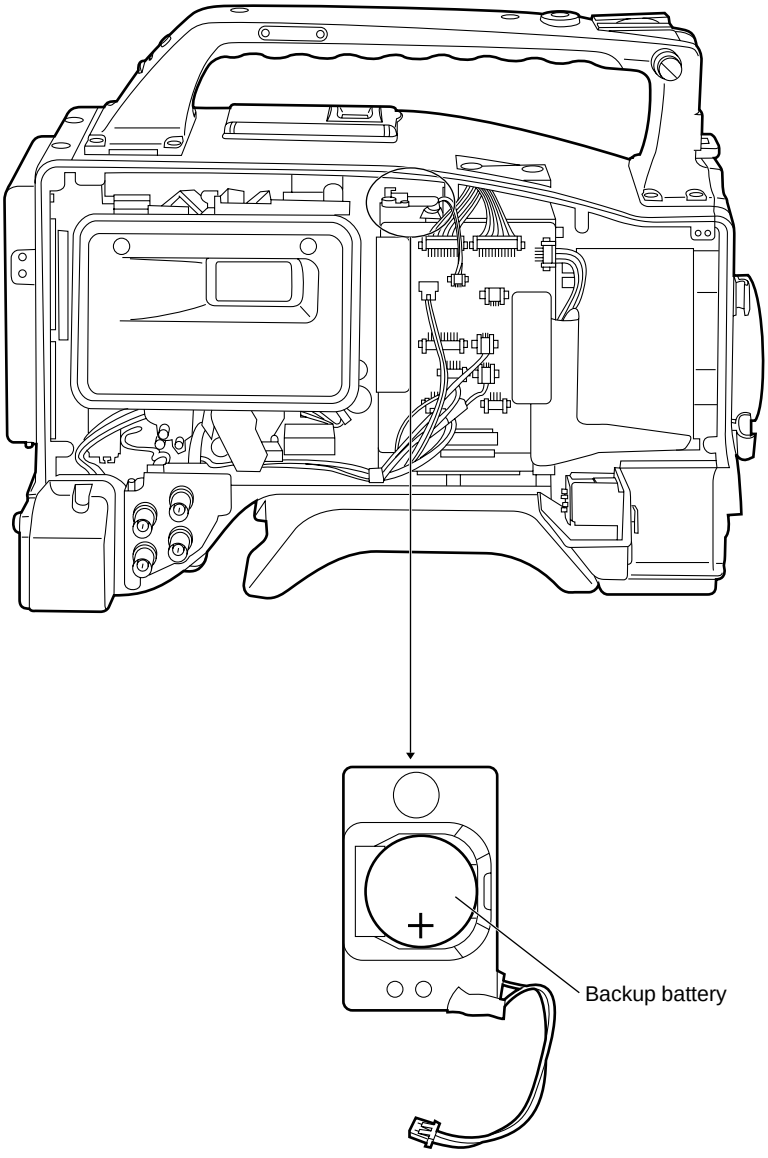

Setting Menu Screens (MAIN menus)

The MAIN menu consists of menus on four menu screens, 1 of 4 to 4 of 4.
Each of these screens is a page screen for opening the sub menus.
To open a SUB menu screen, press the SHIFT/ITEM button to select the SUB menu, and then press the UP or DOWN button.
Press the PAGE button to return from a SUB screen to the MAIN menu screen.

MAIN menu screen 1 of 4

This screen displays the sub menu items on MAIN menu 1 of 4.

```
→****MAIN MENU1/4****
 ROP
 MATRIX
 LOW SETTING
 MID SETTING
 HIGH SETTING
 ADDITIONAL DTL
 SKIN TONE DTL
 KNEE/LEVEL
 FLARE/GAMMA
 CAMERA SETTING
```

SUB menu item	VF display	Remarks
ROP	USER ENG	Index for opening the “ROP” SUB menu.
MATRIX	USER ENG	Index for opening the “MATRIX” SUB menu.
LOW SETTING	USER ENG	Index for opening the “LOW SETTING” SUB menu.
MID SETTING	USER ENG	Index for opening the “MID SETTING” SUB menu.
HIGH SETTING	USER ENG	Index for opening the “HIGH SETTING” SUB menu.
ADDITIONAL DTL	USER ENG	Index for opening the “ADDITIONAL DTL” SUB menu.
SKIN TONE DTL	USER ENG	Index for opening the “SKIN TONE DTL” SUB menu.
KNEE/LEVEL	USER ENG	Index for opening the “KNEE/LEVEL” SUB menu.
FLARE/GAMMA	USER ENG	Index for opening the “FLARE/GAMMA” SUB menu.
CAMERA SETTING	USER ENG	Index for opening the “CAMERA SETTING” SUB menu.

MAIN menu screen 2 of 4

This screen displays the sub menu items on MAIN menu 2 of 4.

```
→****MAIN MENU2/4****
 VF DISPLAY
 VF INDICATOR
 CAMERA ID
 SHUTTER SPEED
 SYNCHRO SCAN
 !LED
 CAMERA SW MODE
 SUPER GAIN
 VTR FUNCTION
 BATT/TAPE ALARM
```

SUB menu item	VF display	Remarks
VF DISPLAY	USER ENG	Index for opening the “VF DISPLAY” SUB menu.
VF INDICATOR	USER ENG	Index for opening the “VF INDICATOR” SUB menu.
CAMERA ID	USER ENG	Index for opening the “CAMERA ID” SUB menu.
SHUTTER SPEED	USER ENG	Index for opening the “SHUTTER SPEED” SUB menu.
SYNCHRO SCAN	USER ENG	Index for opening the “SYNCHRO SCAN” SUB menu.
!LED	USER ENG	Index for opening the “!LED” SUB menu.
CAMERA SW MODE	USER ENG	Index for opening the “CAMERA SW MODE” SUB menu.
SUPER GAIN	USER ENG	Index for opening the “SUPER GAIN” SUB menu.
VTR FUNCTION	USER ENG	Index for opening the “VTR FUNCTION” SUB menu.
BATT/TAPE ALARM	USER ENG	Index for opening the “BATT/TAPE ALARM” SUB menu.

MAIN menu screen 3 of 4

This screen displays the sub menu items on MAIN menu 3 of 4.

```
→****MAIN MENU3/4****
 CARD READ/WRITE
 CARD R/W SELECT
 REC(ASPECT)/PB/RET
 MIC/AUDIO
 GENLOCK/IRIS
 VIDEO OUT
 TIME/DATE
 LENS SEL/ADJ
```

SUB menu item	VF display	Remarks
CARD READ/ WRITE	USER ENG	Index for opening the “CARD READ/WRITE” SUB menu.
CARD R/W SELECT	USER ENG	Index for opening the “CARD R/W SELECT” SUB menu.
REC (ASPECT)/ PB/RET	USER ENG	Index for opening the “REC (ASPECT)/PB/RET” SUB menu.
MIC/ AUDIO	USER ENG	Index for opening the “MIC/AUDIO” SUB menu.
GENLOCK/IRIS	USER ENG	Index for opening the “GENLOCK/IRIS” SUB menu.
VIDEO OUT	USER ENG	Index for opening the “VIDEO OUT” menu.
TIME/DATE	USER ENG	Index for opening the “TIME/DATE” SUB menu.
LENS SEL/ADJ	USER ENG	Index for opening the “LENS SEL/ADJ” SUB menu.

MAIN menu screen 4 of 4

This screen displays the sub menu items on MAIN menu 4 of 4.

```
→****MAIN MENU4/4****

 USER MENU SEL 1/3
 USER MENU SEL 2/3
 USER MENU SEL 3/3
 AUTO SHADING
 EVALUATION
 INITIALIZE
 DIAGNOSTIC
```

SUB menu	VF display	Remarks
USER MENU SEL 1/3	USER ENG	Index for opening the “USER MENU SEL 1 of 3” SUB menu.
USER MENU SEL 2/3	USER ENG	Index for opening the “USER MENU SEL 2 of 3” SUB menu.
USER MENU SEL 3/3	USER ENG	Index for opening the “USER MENU SEL 3 of 3” SUB menu.
AUTO SHADING	USER ENG	Index for opening the “AUTO SHADING” SUB menu.
EVALUATION	USER ENG	Index for opening the “EVALUATION” SUB menu.
INITIALIZE	USER ENG	Index for opening the “INITIALIZE” menu.
DIAGNOSTIC	USER ENG	Index for opening the “DIAGNOSTIC” SUB menu.

<**Note**>
It is not possible to open the MAIN menu screen 4 of 4 using the user menu.
To open this screen, establish the engineer mode.

ROP screen

The ROP (remote operation panel) settings are performed on this screen.

```
→< ROP >

MASTER PED   : +000
MASTER DTL   : +00
MASTER GAMMA : 0.45
R GAIN       : +000
B GAIN       : +000
R PEDESTAL   : +000
G PEDESTAL   : +000
B PEDESTAL   : +000
```

Item	Variable range	VF display	Remarks
MASTER PED	−100 ⋮ +0 ⋮ +100 (max.)	USER ENG	For setting the master pedestal level.
MASTER DTL	−15 ⋮ +0 ⋮ +15	USER ENG	This sets the H.DTL/V.DTL level.
MASTER GAMMA	0.35 ⋮ 0.45 ⋮ 0.75	USER ENG	This sets the master gamma (in 0.01 increments). Different settings for LOW, MID and HIGH can be stored in the memory.
R GAIN	−100 ⋮ +0 ⋮ +100 (max.)	USER ENG	This sets the R channel gain.
B GAIN	−100 ⋮ +0 ⋮ +100 (max.)	USER ENG	This sets the B channel gain.
R PEDESTAL	−100 ⋮ +0 ⋮ +100 (max.)	USER ENG	This sets the R channel pedestal level.
G PEDESTAL	−100 ⋮ +0 ⋮ +100 (max.)	USER ENG	This sets the G channel pedestal level.
B REDESTAL	−100 ⋮ +0 ⋮ +100 (max.)	USER ENG	This sets the B channel pedestal level.

Menu screen display methods

USER menu: The USER menu appears when the MENU switch is set to SET.
ENG menu: The ENG menu appears when the MENU switch is set to SET while the SHIFT/ITEM button and UP button are held down together.

MATRIX screen

The camera's matrix settings are performed on this screen.

```
→< MATRIX >

■MATRIX TABLE  :A
 MATRIX R−G    :+11
 MATRIX R−B    :+09
 MATRIX G−R    :+05
 MATRIX G−B    :+15
 MATRIX B−R    :+11
 MATRIX B−G    :+11
```

■ indicates an ON/OFF setting.

Item	Variable range	VF display	Remarks
MATRIX TABLE	A B	ENG	This selects the color adjustment table.
MATRIX R-G	−31 ⋮ +11 ⋮ +31	ENG	This adjusts the color.
MATRIX R-B	−31 ⋮ +9 ⋮ +31	ENG	This adjusts the color.
MATRIX G-R	−31 ⋮ +5 ⋮ +31	ENG	This adjusts the color.
MATRIX G-B	−31 ⋮ +15 ⋮ +31	ENG	This adjusts the color.
MATRIX B-R	−31 ⋮ +11 ⋮ +31	ENG	This adjusts the color.
MATRIX B-G	−31 ⋮ +11 ⋮ +31	ENG	This adjusts the color.

<**Note**>
The white balance and black balance remain unchanged even when the MATRIX item settings are changed.

The underlining in the variable range column indicates the setting in the preset mode.

<**Note**>
Two tables, A and B, can be stored for MATRIX TABLE.
"00" is the setting for all the MATRIX TABLE B items in the preset mode.

USER menu: The USER menu appears when the MENU switch is set to SET.
ENG menu: The ENG menu appears when the MENU switch is set to SET while the SHIFT/ITEM button and UP button are held down together.

LOW SETTING screen

The low level gain settings are performed on this screen.

```
→< LOW SETTING >

■MASTER GAIN   : 0dB
 H.DTL LEVEL   :10
 V.DTL LEVEL   :10
 DTL CORING    :03
 H.DTL FREQ.   :03
 DARK DTL      :00
 LEVEL DEPEND. :00
 MASTER GAMMA  :0.45
■BLACK STRETCH:OFF
■MATRIX TABLE :A
```

■ indicates an ON/OFF setting.

Item	Variable range	VF display	Remarks
MASTER GAIN	−3 dB ⋮ 0 dB ⋮ 30 dB	ENG	This sets the gain to −3, 0, 3, 6, 9, 12, 15, 18, 21, 24 or 30 dB.
H.DTL LEVEL	0 ⋮ 10 ⋮ 31	ENG	This sets the H.DTL (detail) level.
V.DTL LEVEL	0 ⋮ 10 ⋮ 31	ENG	This sets the V.DTL (detail) level.
DTL CORING	0 ⋮ 3 ⋮ 15	ENG	This sets the DTL coring.
H.DTL FREQ.	1 ⋮ 3 ⋮ 5	ENG	This selects the H.DTL frequency. **1**: 2.5 MHz **4**: 4 MHz **2**: 3 MHz **5**: 4.5 MHz **3**: 3.5 MHz
DARK DTL	0 ⋮ 5	ENG	This sets the dark detail. This boosts the detail of the black areas.
LEVEL DEPEND.	0 ⋮ 15	ENG	This sets LEVEL DEPEND. This eliminates the detail only in the dark areas when the Y detail is boosted. The higher the number selected, the wider the range across which the detail is eliminated.
MASTER GAMMA	0.35 ⋮ 0.45 ⋮ 0.75	ENG	This sets the master gamma in 0.01 increments.
BLACK STRETCH	ON OFF	ENG	This selects ON or OFF for the mode in which low-illumination blackouts are compensated for.
MATRIX TABLE	A B OFF	ENG	This selects the color compensation matrix table.

<**Note**>
DARK DTL and LEVEL DEPEND serve opposite purposes: LEVEL DEPEND is automatically set to 0 when DARK DTL is set to a value other than 0 and, conversely, DARK DTL is automatically set to 0 when LEVEL DEPEND is set to a value other than 0.

The underlining in the variable range column indicates the setting in the preset mode.

USER menu: The USER menu appears when the MENU switch is set to SET.
ENG menu: The ENG menu appears when the MENU switch is set to SET while the SHIFT/ITEM button and UP button are held down together.

MID SETTING screen

The middle level gain settings are performed on this screen.

```
→< MID SETTING >

■MASTER GAIN   : 9dB
 H.DTL LEVEL   :10
 V.DTL LEVEL   :10
 DTL CORING    :06
 H.DTL FREQ.   :03
 DARK DTL      :00
 LEVEL DEPEND. :03
 MASTER GAMMA  :0.45
■BLACK STRETCH:OFF
■MATRIX TABLE :A
```

■ indicates an ON/OFF setting.

Item	Variable range	VF display	Remarks
MASTER GAIN	−3 dB ⋮ 9 dB ⋮ 30 dB	ENG	This sets the gain to −3, 0, 3, 6, 9, 12, 15, 18, 21, 24 or 30 dB.
H.DTL LEVEL	0 ⋮ 10 ⋮ 31	ENG	This sets the H.DTL (detail) level.
V.DTL LEVEL	0 ⋮ 10 ⋮ 31	ENG	This sets the V.DTL (detail) level.
DTL CORING	0 ⋮ 6 ⋮ 15	ENG	This sets the DTL coring.
H.DTL FREQ.	1 ⋮ 3 ⋮ 5	ENG	This selects the H.DTL frequency. **1**: 2.5 MHz **4**: 4 MHz **2**: 3 MHz **5**: 4.5 MHz **3**: 3.5 MHz
DARK DTL	0 ⋮ 5	ENG	This sets the dark detail. This boosts the detail of the black areas.
LEVEL DEPEND.	0 ⋮ 3 ⋮ 15	ENG	This sets LEVEL DEPEND. This eliminates the detail only in the dark areas when the Y detail is boosted. The higher the number selected, the wider the range across which the detail is eliminated.
MASTER GAMMA	0.35 ⋮ 0.45 ⋮ 0.75	ENG	This sets the master gamma in 0.01 increments.
BLACK STRETCH	ON OFF	ENG	This selects ON or OFF for the mode in which low-illumination blackouts are compensated for.
MATRIX TABLE	A B OFF	ENG	This selects the color compensation matrix table.

<**Note**>
DARK DTL and LEVEL DEPEND serve opposite purposes: LEVEL DEPEND is automatically set to 0 when DARK DTL is set to a value other than 0 and, conversely, DARK DTL is automatically set to 0 when LEVEL DEPEND is set to a value other than 0.

The underlining in the variable range column indicates the setting in the preset mode.

USER menu: The USER menu appears when the MENU switch is set to SET.
ENG menu: The ENG menu appears when the MENU switch is set to SET while the SHIFT/ITEM button and UP button are held down together.

HIGH SETTING screen

The high level gain settings are performed on this screen.

```
→< HIGH SETTING >

■MASTER GAIN   :18dB
 H.DTL LEVEL   :10
 V.DTL LEVEL   :10
 DTL CORING    :10
 H.DTL FREQ.   :03
 DARK DTL      :00
 LEVEL DEPEND. :08
 MASTER GAMMA  :0.45
■BLACK STRETCH:OFF
■MATRIX TABLE  :A
```

■ indicates an ON/OFF setting.

Item	Variable range	VF display	Remarks
MASTER GAIN	−3 dB ⋮ 18 dB ⋮ 30 dB	ENG	This sets the gain to −3, 0, 3, 6, 9, 12, 15, 18, 21, 24 or 30 dB.
H.DTL LEVEL	0 ⋮ 10 ⋮ 31	ENG	This sets the H.DTL (detail) level.
V.DTL LEVEL	0 ⋮ 10 ⋮ 31	ENG	This sets the V.DTL (detail) level.
DTL CORING	0 ⋮ 10 ⋮ 15	ENG	This sets the DTL coring.
H.DTL FREQ.	1 ⋮ 3 ⋮ 5	ENG	This selects the H.DTL frequency. **1:** 2.5 MHz **4:** 4 MHz **2:** 3 MHz **5:** 4.5 MHz **3:** 3.5 MHz
DARK DTL	0 ⋮ 5	ENG	This sets the dark detail. This boosts the detail of the black areas.
LEVEL DEPEND.	0 ⋮ 8 ⋮ 15	ENG	This sets LEVEL DEPEND. This eliminates the detail only in the dark areas when the Y detail is boosted. The higher the number selected, the wider the range across which the detail is eliminated.
MASTER GAMMA	0.35 ⋮ 0.45 ⋮ 0.75	ENG	This sets the master gamma in 0.01 increments.
BLACK STRETCH	ON OFF	ENG	This selects ON or OFF for the mode in which low-illumination blackouts are compensated for.
MATRIX TABLE	A B OFF	ENG	This selects the color compensation matrix table.

<**Note**>
DARK DTL and LEVEL DEPEND serve opposite purposes: LEVEL DEPEND is automatically set to 0 when DARK DTL is set to a value other than 0 and, conversely, DARK DTL is automatically set to 0 when LEVEL DEPEND is set to a value other than 0.

The underlining in the variable range column indicates the setting in the preset mode.

USER menu: The USER menu appears when the MENU switch is set to SET.
ENG menu: The ENG menu appears when the MENU switch is set to SET while the SHIFT/ITEM button and UP button are held down together.

ADDITIONAL DTL screen

The special detail settings of the camera are performed on this screen.

```
→< ADDITIONAL DTL >

■C DTL COMPE.   :OFF
 CHROMA DTL     :0
■KNEE APERTURE  :ON
■SLIM DTL       :OFF
■CORNER DTL     :ON
 DTL GAIN(+)    :+00
 DTL GAIN(−)    :+16
 DTL CLIP       :00
 H.DTL LINE MIX:1H
```

■ indicates an ON/OFF setting.

Item	Variable range	VF display	Remarks
C DTL COMPE.	ON OFF	ENG	This selects ON or OFF for the chroma DTL.
CHROMA DTL	0–2	ENG	This sets the chroma DTL. This detects the chroma edge and superimposing it onto Y to boost the H detail. The higher the number selected, the greater the level of compensation provided.
KNEE APERTURE	ON OFF	ENG	This selects ON or OFF for the knee aperture. This boosts the detail above the knee point.
SLIM DTL	ON OFF	ENG	This selects ON or OFF for mode in which the detail is made finer.
CORNER DTL	ON OFF	ENG	This selects ON or OFF for mode which increases the resolution at the edges of the screen.
DTL GAIN (+)	−31 ⋮ +0 ⋮ +31	ENG	This changes the H detail level in the "+" direction.
DTL GAIN (−)	−31 ⋮ +16 ⋮ +31	ENG	This changes the H detail level in the "−" (downward) direction.
DTL CLIP	0 ⋮ 31	ENG	This changes the clipping of the detail signals in the "+" direction.
H.DTL LINE MIX	0H 1H 2H	ENG	This sets the addition of the scanning lines for generating H detail signals.

The underlining in the variable range column indicates the setting in the preset mode.

USER menu: The USER menu appears when the MENU switch is set to SET.
ENG menu: The ENG menu appears when the MENU switch is set to SET while the SHIFT/ITEM button and UP button are held down together.

SKIN TONE DTL screen

The camera's skin tone detail settings are performed on this screen.

```
→< SKIN TONE DTL >

■SKIN TONE DTL    :OFF
 SKIN TONE HUE    :103
 SKIN TONE LEVEL  :25
 SKIN TONE WIDTH  :15
 SKIN TONE CORING :05
■SKIN TONE ZEBRA  :OFF
```

■ indicates an ON/OFF setting.

<**Note**>
All the displays except the change data are cleared while the hue, level, width and coring data of the skin tone is being changed.

The underlining in the variable range column indicates the setting in the preset mode.

Item	Variable range	VF display	Remarks
SKIN TONE DTL	ON OFF	ENG	This selects ON or OFF for the skin tone detail.
SKIN TONE HUE	103 ⋮ 143	ENG	This sets the skin tone hue (for setting the phase of the skin tone detection range). The hue is changed in the phase direction.
SKIN TONE LEVEL	1 ⋮ 25 ⋮ 50	ENG	This sets the skin tone level (for setting the intensity of the colors in the skin tone detection range). The level is changed in the amplitude direction.
SKIN TONE WIDTH	1 ⋮ 15 ⋮ 30	ENG	This sets the skin tone width This sets the range of colors to be treated as the skin tone from among the colors set by SKIN TONE HUE and LEVEL. The higher the number selected, the wider the skin tone range.
SKIN TONE CORING	1 ⋮ 5 ⋮ 15	ENG	This sets the skin tone coring. The amount of detail in the skin tone range is changed.
SKIN TONE ZEBRA	ON OFF	ENG	This selects ON or OFF for ZEBRA in the skin tone range. This changes the coring in the range across which ZEBRA can be seen.

The underlining in the variable range column indicates the setting in the preset mode.

USER menu: The USER menu appears when the MENU switch is set to SET.
ENG menu: The ENG menu appears when the MENU switch is set to SET while the SHIFT/ITEM button and UP button are held down together.

KNEE/LEVEL screen

The knee level settings of the camera are performed on this screen.

```
→< KNEE/LEVEL >

 M.PED            :+000
■SETUP50          :7.5%A
■SETUP25          :7.5%A
■MANUAL KNEE      :ON
 KNEE POINT       :85
 KNEE SLOPE       :16
■WHITE CLIP       :ON
 WHITE CLIP LVL   :107%
 AUTO KNEE POINT  :085
 AUTO KNEE LVL    :105
```

■ indicates an ON/OFF setting.

Item	Variable range	VF display	Remarks
M.PED	−100 ⋮ +000 ⋮ +100	ENG	This sets the master pedestal level.
SET UP 50	0% 7.5%A	ENG	This selects the setup level. **0%:** 0% setup for both the camera output and tape. **7.5%:** 7.5% setup for both the camera output and tape. **7.5%A:** 7.5% setup for the camera output; 0% setup for the tape. *When the setup level is changed to 7.5%A, the chroma level and burst level on the CAM ENC circuit board must be re-adjusted.
SET UP 25	0% 7.5% 7.5%A		
MANUAL KNEE	ON OFF	ENG	This sets the mode to be established when the AUTO KNEE switch is set to OFF.
KNEE POINT	75 ⋮ 85 ⋮ 90	ENG	This sets the manual knee point position.
KNEE SLOPE	0 ⋮ 16 ⋮ 25	ENG	This sets the manual knee slope.
WHITE CLIP	ON OFF	ENG	This selects ON or OFF for the white clip.
WHITE CLIP LVL	90% ⋮ 107% ⋮ 110%	ENG	This sets the white clip level.
AUTO KNEE POINT	75 ⋮ 85 ⋮ 90	ENG	This sets the automatic knee point position.
AUTO KNEE LVL	100 ⋮ 105 ⋮ 110	ENG	This sets the maximum level of the automatic knee.

The underlining in the variable range column indicates the setting in the preset mode.

USER menu: The USER menu appears when the MENU switch is set to SET.
ENG menu: The ENG menu appears when the MENU switch is set to SET while the SHIFT/ITEM button and UP button are held down together.

FLARE/GAMMA screen

The flare and gamma settings of the camera are performed on this screen.

```
→< FLARE/GAMMA >

  R FLARE :000
  G FLARE :000
  B FLARE :000
  R GAMMA :+00
  B GAMMA :+00
```

Item	Variable range	VF display	Remarks
R FLARE	0 ⋮ 100	ENG	This sets the R channel flare. The preset value differs depending on the camera.
G FLARE	0 ⋮ 100	ENG	This sets the G channel flare. The preset value differs depending on the camera.
B FLARE	0 ⋮ 100	ENG	This sets the B channel flare. The preset value differs depending on the camera.
R GAMMA	−15 ⋮ +0 ⋮ +15	ENG	This sets the correction value for the R channel gamma in respect of the master gamma level.
B GAMMA	−15 ⋮ +0 ⋮ +15	ENG	This sets the correction value for the B channel gamma in respect of the master gamma level.

CAMERA SETTING screen

The basic settings of the camera are performed on this screen. Before each screen item is an asterisk ("*") or dot (".") which respectively indicates whether the setting is ON or OFF.

```
→< CAMERA/SETTING >

  *DETAIL
  ·2D LPF
  *SUPER COLOR
  *GAMMA
  ·TEST SAW
  *FLARE
  *H−F COMPE
  *NEGATIVE DTL
```

*: ON
·: OFF

The underlining in the variable range column indicates the setting in the preset mode.

USER menu: The USER menu appears when the MENU switch is set to SET.

ENG menu: The ENG menu appears when the MENU switch is set to SET while the SHIFT/ITEM button and UP button are held down together.

Item	Variable range	VF display	Remarks
DETAIL	ON OFF	ENG	This selects ON or OFF for the H and V detail. (The ON or OFF setting applies to both the H and V detail.)
2D LPF	ON OFF	ENG	This selects ON or OFF for the 2-dimensional low-pass filter, which reduces cross-color.
SUPER COLOR	ON OFF	ENG	This selects ON or OFF for the mode in which the dynamic range of the color is to be expanded. The item is used to boost the color above the knee point.
GAMMA	ON OFF	ENG	This selects ON or OFF for the gamma correction.
TEST SAW	ON OFF	ENG	This selects ON or OFF for the test signal.
FLARE	ON OFF	ENG	This selects ON or OFF for the flare compensation.
H-F COMPE.	ON OFF	ENG	This selects ON or OFF for the mode in which the high-frequency detail is enhanced.
NEGATIVE DTL	ON OFF	ENG	This selects ON or OFF for the DTL signal from the setup level (7.5%) to the blanking level.

VF DISPLAY screen

What information is to be displayed inside the viewfinder is set on this screen.

```
  →< VF DISPLAY >
DISP CONDITION:NORMAL
DISP MODE      :3
SAFETY ZONE    :3
CENTER MARK    :ON
VF OUT         :Y
VF DTL         :2
ZEBRA1 DETECT  :070%
ZEBRA2 DETECT  :085%
ZEBRA2         :SPOT
50M INDICATION:OFF
LOW LIGHT LVL  :45%
```

Item	Variable range	VF display	Remarks
DISP CONDITION	NORMAL SPECIAL	USER ENG	**NORMAL:** The statuses are displayed at all times. **SPECIAL:** The statuses are displayed only when the MODE CHECK switch is at ON.
DISP MODE	1-3	USER ENG	
SAFETY ZONE	OFF-3-9	USER ENG	This selects ON or OFF for the safety zone selection display. **1:** 80%, 90% corner display **2:** 80% corner display **3:** 90% corner display **4:** 80%, 90% box display **5:** 80% box display **6:** 90% box display **7:** With a 16:9 aspect ratio, a 4:3 picture frame and 90% of 4:3 are displayed. With a 4:3 aspect ratio, a 16:9 picture frame and 90% of 16:9 are displayed. **8:** With a 16:9 aspect ratio, a 4:3 picture frame and 80% of 4:3 are displayed. With a 4:3 aspect ratio, a 16:9 picture frame and 80% of 16:9 are displayed. **9:** With a 16:9 aspect ratio, a 4:3 picture frame (100%) is displayed. With a 4:3 aspect ratio, a 16:9 picture frame (100%) is displayed.
CENTER MARK	ON OFF	USER ENG	This selects ON or OFF for the center mark display.
VF OUT	Y NAM R G B	USER ENG	This selects the VF output. NAM (N Additive Mix) The signals with the highest level among the R, G and B signals are output.
VF DTL	0 2 4	USER ENG	This selects the VF detail. The detail of the VF signals is further boosted. At the “0” setting, the detail is the same as for the main-line signals.

Change	Display 1	Display 2	Display 3
FILTER	×	×	○
GAIN	×	×	○
AWB	×	×	○
AUTO KNEE SW	×	○	○
SHUTTER	×	○	○
ABB STATUS	×	○	○
AWB STATUS	×	○	○

MAIN Menu Screen 2 of 4 (SUB menus)

```
  →< VF DISPLAY >
DISP CONDITION:NORMAL
DISP MODE      :3
SAFETY ZONE    :3
CENTER MARK    :ON
VF OUT         :Y
VF DTL         :2
ZEBRA1 DETECT  :070%
ZEBRA2 DETECT  :085%
ZEBRA2         :SPOT
50M INDICATION:OFF
LOW LIGHT LVL  :45%
```

Item	Variable range	VF display	Remarks
ZEBRA1 DETECT	50% ⋮ 70% ⋮ 110%	USER ENG	This sets the ZEBRA1 detection level (IRE value).
ZEBRA2 DETECT	50% ⋮ 85% ⋮ 110%	USER ENG	This sets the ZEBRA2 detection level (IRE value).
ZEBRA2	ON OFF SPOT	USER ENG	This selects ON or OFF for ZEBRA2 and for setting SPOT. *The ZEBRA2 DETECT level should be set higher than the ZEBRA1 detect level when the SPOT setting is to be used. If it is set lower, ZEBRA will not be displayed.
50M INDICATION	ON OFF	USER ENG	This sets what is to be displayed when recording with the 50 Mbps format.
LOW LIGHT LVL	OFF 20% 25% 30% ⋮ 40% 45%	USER ENG	This selects the setting at which LOW LIGHT is to be displayed when the quantity of light entering the camera is too low.

The underlining in the variable range column indicates the setting in the preset mode.

USER menu: The USER menu appears when the MENU switch is set to SET.
ENG menu: The ENG menu appears when the MENU switch is set to SET while the SHIFT/ITEM button and UP button are held down together.

VF INDICATOR screen

What information is to be displayed inside the viewfinder is set on this screen.

```
→< VF INDICATOR >
 EXTENDER      :ON
 SHUTTER       :ON
 TAPE          :ON
 BATTERY       :ON
 FILTER        :ON
 WHITE         :ON
 GAIN          :ON
 LEVEL METER   :CH1
 IRIS          :S+IRIS
 CAMERA ID     :ON
 DATE/TIME     :OFF
```

Item	Variable range	VF display	Remarks
EXTENDER	ON OFF	USER ENG	This selects ON or OFF for the extender display.
SHUTTER	ON OFF	USER ENG	This selects ON or OFF for the shutter speed display.
TAPE	ON OFF	USER ENG	This selects ON or OFF for the remaining tape length display.
BATTERY	ON OFF	USER ENG	This selects ON or OFF for the battery voltage display.
FILTER	ON OFF	USER ENG	This selects ON or OFF for the filter No. display.
WHITE	ON OFF	USER ENG	This selects ON or OFF for the AWB PRST/A/B display.
GAIN	ON OFF	USER ENG	This selects ON or OFF for the currently selected gain display.
LEVEL METER	CH1 CH1·CH2 OFF	USER ENG	This selects the audio level meter display. **CH1:** The CH1 signal level only is displayed. **CH1/CH2:** Both the CH1 and CH2 signal levels are displayed. **OFF:** No display.
IRIS	IRIS S+IRIS S OFF	USER ENG	**IRIS:** Only the f-number is displayed. **S+IRIS:** Both the super iris ON status and f-number are displayed. **S:** Only the super iris ON status is displayed. **OFF:** Neither the super iris ON status nor f-number is displayed.
CAMERA ID	ON OFF	USER ENG	This selects ON or OFF for mixing the ID during color bar recording.
DATE/TIME	ON OFF	USER ENG	This selects ON or OFF for turning the USER MENU display of the DATE/TIME.

The underlining in the variable range column indicates the setting in the preset mode.

USER menu: The USER menu appears when the MENU switch is set to SET.
ENG menu: The ENG menu appears when the MENU switch is set to SET while the SHIFT/ITEM button and UP button are held down together.

CAMERA ID screen

The camera ID settings are performed on this screen. Each time the UP button is pressed, the character display changes in the following order: space (□)→english letters (A to Z)→numbers (0 to 9)→symbols (space, >, <,), (, ’, ‘, ,, ––, _, ~, /, !).
Pressing the DOWN button changes the character display in the reverse order.

```
→< CAMERA ID >

  ID:**********
```

Item	Variable range	VF display	Remarks
ID:**********	——	USER ENG	This is for inputting the camera ID.

<**Note**>
Whether this setting is to be mixed is selected by setting “CAMERA ID” on the VF DISPLAY screen to ON or OFF.

SHUTTER SPEED screen

The shutter speed settings are performed on this screen.
Before each screen item is an asterisk (“*”) or dot (“.”) which respectively indicates whether the setting is ON or OFF.

```
→< SHUTTER SPEED >

   *SYNCHRO SCAN
   ·SUPER V
   *1/100
   *1/120
   *1/250
   *1/500
   *1/1000
   *1/2000
```

Item	Variable range	VF display	Remarks
SYNCHRO SCAN	<u>ON</u> OFF	ENG	This sets the synchro scan shutter speed.
SUPER V	ON <u>OFF</u>	ENG	This sets the super V mode (vertical high-resolution mode).
1/100	<u>ON</u> OFF	ENG	This selects ON or OFF for the shutter speed 1/100 setting.
1/120	<u>ON</u> OFF	ENG	This selects ON or OFF for the shutter speed 1/120 setting.
1/250	<u>ON</u> OFF	ENG	This selects ON or OFF for the shutter speed 1/250 setting.
1/500	<u>ON</u> OFF	ENG	This selects ON or OFF for the shutter speed 1/500 setting.
1/1000	<u>ON</u> OFF	ENG	This selects ON or OFF for the shutter speed 1/1000 setting.
1/2000	<u>ON</u> OFF	ENG	This selects ON or OFF for the shutter speed 1/2000 setting.

<**Note**>
The SUPER V mode setting is linked to the “CAMERA SW MODE” menu setting.

The underlining in the variable range column indicates the setting in the preset mode.

USER menu: The USER menu appears when the MENU switch is set to SET.
ENG menu: The ENG menu appears when the MENU switch is set to SET while the SHIFT/ITEM button and UP button are held down together.

SYNCHRO SCAN screen

The synchro scan settings are performed on this screen.

```
→< SYNCHRO SCAN >

      1/60.8
```

Item	Variable range	VF display	Remarks
SYNCHRO SCAN	1/60.8 ⋮ 1/250	USER ENG	This selects the synchro shutter speed.

! LED screen

The ON/OFF settings for the ! LED displays inside the viewfinder are performed on this screen.
Before each screen item is an asterisk (“*”) or dot (“.”) which respectively indicates whether the setting is ON or OFF.

```
→< !LED >

GAIN(0dB)     :ON
GAIN(−3dB)    :OFF
SHUTTER       :ON
WHITE PRESET  :OFF
EXTENDER      :ON
FILTER        :OFF
SUPER V       :OFF
25M/50M       :OFF
```

Item	Variable range	VF display	Remarks
GAIN (0 dB)	ON OFF	ENG	This selects whether the LED is to light up when the gain has a value other than 0 dB.
GAIN (−3 dB)	ON OFF	ENG	This selects whether the LED is to light up when the gain has a value other than −32 dB.
SHUTTER	ON OFF	ENG	This selects whether the LED is to light up when the shutter is ON.
WHITE PRESET	ON OFF	ENG	This selects whether the LED is to light up when the AWB CH is PRESET.
EXTENDER	ON OFF	ENG	This selects whether the LED is to light up when the lens is in the EXTENDER mode.
FILTER	ON OFF	ENG	This is for selecting whether the LED is to light at all times except when 3200K and CLEAR are used in combination for the filter.
SUPER V	ON OFF	ENG	This selects whether the LED is to light up when SUPER V is ON.
25M/50M	25M 50M OFF	ENG	This selects whether the LED is to light up when the 25M or 50M recording format is used.

<**Note**>
The ! LED lights when both the GAIN (0 dB) and GAIN (−3 dB) items are set to ON unless the gain is set to −3 dB or 0 dB.

The underlining in the variable range column indicates the setting in the preset mode.

USER menu: The USER menu appears when the MENU switch is set to SET.
ENG menu: The ENG menu appears when the MENU switch is set to SET while the SHIFT/ITEM button and UP button are held down together.

CAMERA SW MODE screen

The camera's switch modes are set on this screen.

```
→< CAMERA SW MODE >

SUPER V          :FRM1
FILTER INH       :ON
SHOCKLESS AWB    :NORMAL
COLOR BAR        :SMPTE
S.GAIN OFF       :L/M/H
S.IRIS/S.BLK SW  :INH
S.BLK LVL        :−10
ECU DATA SAVE    :OFF
```

Item	Variable range	VF display	Remarks
SUPER V	FRM1 FRM2	ENG	This selects ON or OFF for SUPER V. **FRM1:** Normal mode **FRM2:** Residual image reduction mode
FILTER INH	ON OFF	ENG	This switches whether the AWB memory (A and B channels) data is to be stored for each filter. **ON:** The data is stored in the A and B channel memories (2 memory units) only regardless of the filter. **OFF:** The data is stored for each filter. (4×2=8 memory units)
SHOCKLESS AWB	OFF NORMAL SLOW FAST	ENG	This selects ON (NORMAL/SLOW/FAST) or OFF for shockless AWB. "Shockless AWB" ensures that a shock will not result when the A, B or PRST setting of the WHITE BAL switch is changed. FAST (high speed), NORMAL (normal speed) or SLOW (low speed) can be set as the selection time. FAST (approx. 0.5 sec), NORMAL (approx. 1 sec), SLOW (approx. 3 sec)
COLOR BAR	SMPTE SNG	ENG	This selects the type of color bars. **SMPTE:** SMPTE color bars **SNG:** SNG (split) color bars
S.GAIN OFF	S.GAIN L/M/H	ENG	This selects the method used to release the super gain mode. **S.GAIN:** The mode is released by the super gain switch only. **L/M/H:** The mode is released by changing the L/M/H switch setting.
S.IRIS/ S.BLK SW	S.IRIS S.BLK INH	ENG	This allocates the function of the side panel switch. **S.IRIS:** The switch works as a super iris function. **S.BLK:** The switch works as a super black function.* **INH:** Both the super iris and super black functions are inhibited.
S.BLK LVL	−10 −20 −30	ENG	This sets the super black level.
ECU DATA SAVE	ON OFF	ENG	**ON:** The data controlled by ECU is stored in the memory. **OFF:** The data is not stored in the memory.

<**Note**>
When OFF has been selected for the ECU DATA SAVE item setting, set the unit's POWER switch to OFF after setting the POWER switch on the AJ-EC3 to the OFF position. If its POWER switch is set to OFF before the POWER switch on the AJ-EC3 is set to the OFF position, the adjustments and settings performed when the AJ-EC3 was operated will be saved instead.

*S.BLK is a function which enables the master pedestal to be set lower than the pedestal level. It is used when the black figures displayed on the screen have become lighter due to mist, etc.

The underlining in the variable range column indicates the setting in the preset mode.

USER menu: The USER menu appears when the MENU switch is set to SET.
ENG menu: The ENG menu appears when the MENU switch is set to SET while the SHIFT/ITEM button and UP button are held down together.

SUPER GAIN screen

The super gain values to be allocated to the SUPER GAIN switch are set on this screen.

```
→< SUPER GAIN >

  * 30dB
  · 36dB
```

*: ON
·: OFF

Item	Variable range	VF display	Remarks
30 dB	<u>ON</u> OFF	ENG	This selects the gain when the SUPER GAIN switch is pressed.
36 dB	ON <u>OFF</u>	ENG	This selects the gain when the SUPER GAIN switch is pressed.

<**Note**>

- Each time the SUPER GAIN switch is pressed when all the super gain values have been allocated, the gain is switched by one level in the following sequence: 30 dB→36 dB→OFF→30 dB, etc.
- To use the unit, set the WHITE BAL switch to PRST (preset) and proceed with ABB (auto black balance).

The underlining in the variable range column indicates the setting in the preset mode.

USER menu: The USER menu appears when the MENU switch is set to SET.
ENG menu: The ENG menu appears when the MENU switch is set to SET while the SHIFT/ITEM button and UP button are held down together.

VTR FUNCTION screen

The VTR's functions are set on this screen.

```
→< VTR FUNCTION >

HUMID OPE    :OFF
26P CONTROL  :OFF
REC START    :NORMAL
TC MODE      :DF
UB MODE      :USER
PAUSE TIMER  :30
BATTERY SEL  :NiCd12
TCG VF DISP  :OFF
TCG SET HOLD:OFF
FIRST REC TC:REGEN
```

Item	Variable range	VF display	Remarks
HUMID OPE	ON OFF	ENG	This selects the VTR operation when condensation has formed. **ON:** Operation continues as usual. **OFF:** All operations are disabled except for the POWER switch and EJECT button.
26P CONTROL	OFF BOTH ON	ENG	This selects 26P remote control. **OFF:** Unit only (no 26P control). **BOTH:** Unit and 26P remote control (tally LED displays unit's REC status). **ON:** 26P remote control only (tally LED displays 26P VTR's REC status).
REC START	ALL NORMAL	ENG	This selects in what VTR mode REC is to be acknowledged when the VTR is started or stopped. **ALL:** REC is acknowledged in any VTR mode. **NORMAL:** REC is acknowledged only in the STOP (power save) mode and REC PAUSE mode.
TC MODE	DF NDF	ENG	This sets DF or NDF for the time code. **DF:** Drop frame mode **NDF:** Non-drop frame mode
UB MODE	USER DATE TIME EXT	ENG	This selects how LTC UB is to be used. **USER:** User setting (fixed setting) **DATE:** For year/month/day/hour real-time operations. **TIME:** For hour/minute/second real-time operations. **EXT:** The UBG value is slave-locked when an external TC signal has been input. (The user setting is used when there is no external input.)
PAUSE TIMER	10 20 30 60	ENG	This selects the time for which the REC/PAUSE status is to be maintained. **10/20/30/60:** Status is to be held for 10, 20, 30 or 60 minutes.
BATTERY SEL	NiCd12 NiCd13 NiCd14 IDXL-40 L-60 L-90 ANTON-D IDX-D	ENG	This selects the battery type. **NiCd12:** When a 12V NiCd battery is used **NiCd13:** When a 13V NiCd battery is used **NiCd14:** When a 14V NiCd battery is used **IDXL-40:** When the L-40 battery made by IDX is used **L-60/L-90:** When a battery made by Sony is used **ANTON-D:** When a battery made by Anton Bauer is used **IDX-D:** When a battery made by IDX is used digitally

<**Notes**>

- Set SW201 on the CAM ENC board to ON when the 26P remote control function is to be used.
- Change the time on the TIME/DATE menu screen when the REAL setting is to be used for the UB MODE item.

The underlining in the variable range column indicates the setting in the preset mode.

MAIN Menu Screen 2 of 4 (SUB menus)

```
→< VTR FUNCTION >

HUMID OPE    :OFF
26P CONTROL  :OFF
REC START    :NORMAL
TC MODE      :DF
UB MODE      :USER
PAUSE TIMER  :30
BATTERY SEL  :NiCd12
TCG VF DISP  :OFF
TCG SET HOLD:OFF
FIRST REC TC:REGEN
```

Item	Variable range	VF display	Remarks
TCG VF DISP	ON OFF	ENG	This selects ON or OFF for time code display in the viewfinder. **ON:** The time code is displayed. **OFF:** The time code is not displayed.
TCG SET HOLD	ON OFF	ENG	This selects the TCG operation when operation is performed in the following sequence: TCG SET→power OFF→power ON→REC. **ON:** The fact that TCG SET has been selected is stored in the memory when the power is switched off, and regeneration is not performed. **OFF:** The fact that TCG SET has been selected is not stored in the memory when the power is switched off, and regeneration is performed.
FIRST REC TC	REGEN PRESET	ENG	This sets the TC REGEN mode when recording starts. **REGEN:** Regeneration is performed in the time code on the tape. **PRESET:** Regeneration is not performed in the time code on the tape. However, when the mode is transferred from REC/PAUSE to REC, regeneration is forcibly performed.

The underlining in the variable range column indicates the setting in the preset mode.

USER menu: The USER menu appears when the MENU switch is set to SET.
ENG menu: The ENG menu appears when the MENU switch is set to SET while the SHIFT/ITEM button and UP button are held down together.

BATT/TAPE ALARM screen

The battery end and remaining tape warning beeps heard can be turned off if they disturb the concentration during shooting.

```
→< BATT/TAPE ALARM >

 BATT NEAR END   :OFF
 BATT END        :ON
 TAPE NEAR END   :OFF
 TAPE END        :ON
```

Item	Variable range	VF display	Remarks
BATT NEAR END	ON OFF	ENG	This selects ON or OFF for the warning beeps heard when the battery charge is nearly depleted.
BATT END	ON OFF	ENG	This selects ON or OFF for the warning beeps heard when the battery charge is depleted.
TAPE NEAR END	ON OFF	ENG	This selects ON or OFF for the warning beeps heard when the tape nears the end. (A warning is given about 3 minutes before the tape reaches its end.)
TAPE END	ON OFF	ENG	This selects ON or OFF for the warning beeps heard when the tape has reached its end.

The underlining in the variable range column indicates the setting in the preset mode.

USER menu: The USER menu appears when the MENU switch is set to SET.
ENG menu: The ENG menu appears when the MENU switch is set to SET while the SHIFT/ITEM button and UP button are held down together.

CARD READ/WRITE screen

The operations for loading the menu data from the setup card, saving it on the setup card, and configuring the setup card are set on this screen.
Align the arrow (→) with the item and press the UP or DOWN button to initiate the corresponding operation.

```
→< CARD READ/WRITE >

 READ
  SELECT          1
 WRITE
  SELECT          1
 CARD CONFIG
 READ USER DATA
```

Item	Variable range	VF display	Remarks
READ	——	ENG	This loads (reads) the data from the setup card.
SELECT	1 (fixed)	ENG	This item is always set to “1”. [It cannot be used when the Picture Link adaptor board (AJ-YAP900, optional accessory) has not been installed.]
WRITE	——	ENG	This saves (writes) the camera’s data onto the setup card.
SELECT	1 (fixed)	ENG	This item is always set to “1”. [It cannot be used when the Picture Link adaptor board (AJ-YAP900, optional accessory) has not been installed.]
CARD CONFIG	——	ENG	This formats the setup card.
READ USER DATA	——	ENG	This loads (reads) the user area data in the camera’s memory.

The underlining in the variable range column indicates the setting in the preset mode.

USER menu: The USER menu appears when the MENU switch is set to SET.
ENG menu: The ENG menu appears when the MENU switch is set to SET while the SHIFT/ITEM button and UP button are held down together.

CARD R/W SELECT screen

Whether the recording of specific menu data onto, or the loading of the data from, the setup card is to be set to ON or OFF on this screen.

```
 →< CARD R/W SELECT >

 ID READ/WRITE      :OFF
MENU−1/4 LEVEL R/W:ON
MENU−1/4 SW(■) R/W:ON
MENU−2/4 ALL   R/W:ON
MENU−3/4 ALL   R/W:ON
```

Item	Variable range	VF display	Remarks
ID READ/WRITE	ON OFF	USER ENG	This selects ON or OFF for recording and loading the camera ID during setup card read/write operations. (See *) **ON:** Recording/loading is enabled. **OFF:** Recording/loading is disabled.
MENU-1/4 LEVEL R/W	ON OFF	USER ENG	This selects ON or OFF for recording and loading the adjustments made with the LEVEL item on MAIN menu screen 1 of 4 during setup card read/write operations. **ON:** Recording/loading is enabled. **OFF:** Recording/loading is disabled.
MENU-1/4 SW (■) R/W	ON OFF	USER ENG	This selects ON or OFF for recording and loading the items indicated by (■) alongside the ON/OFF items on MAIN menu screen 1 of 4 during setup card read/write operations. **ON:** Recording/loading is enabled. **OFF:** Recording/loading is disabled.
MENU-2/4 ALL R/W	ON OFF	USER ENG	This selects ON or OFF for recording and loading the MAIN menu 2 of 4 data during setup card read/write operations. **ON:** Recording/loading is enabled. **OFF:** Recording/loading is disabled.
MENU-3/4 ALL R/W	ON OFF	USER ENG	This selects ON or OFF for recording and loading the MAIN menu 3 of 4 data during setup card read/write operations. **ON:** Recording/loading is enabled. **OFF:** Recording/loading is disabled.

*For instance, set the ID READ/WRITE item to OFF when the camera ID is not to be changed when reading from or writing onto the setup card.

<**Note**>
The settings selected on the <CARD R/W SELECT> screen are also valid when user area data in the camera's memory is read out (READ USER DATA).
However, when user area data is written into the camera's memory (WRITE USER DATA), all the data will be recorded regardless of the settings selected on the <CARD R/W SELECT> screen.

The underlining in the variable range column indicates the setting in the preset mode.

USER menu: The USER menu appears when the MENU switch is set to SET.
ENG menu: The ENG menu appears when the MENU switch is set to SET while the SHIFT/ITEM button and UP button are held down together.

REC (ASPECT)/PB/RET screen

The recording, playback and return functions are set on this screen.

```
→< REC(ASPECT)/PB/RET >

 REC SIGNAL   : CAM
 REC MODE     :  4*3/50M
 PB MODE      : AUTO
 RET SW       : REC CHECK
```

Item	Variable range	VF display	Remarks
REC SIGNAL	CAM VIDEO	USER ENG	This selects the video input signals. **CAM:** Signals input from the camera. **VIDEO:** Signals input from the GENLOCK IN connector. *Even when VIDEO has been selected as the REC.SIGNAL item setting, the setting will revert to CAM when the power is turned off and then turned back on.
REC MODE	16*9/50M 4*3/50M 16*9/25M 4*3/25M	ENG	This selects the mode for recording on the VTR. **16*9/50M:** (16:9) signals are recorded using the 50 Mbps format. **4*3/50M:** (4:3) signals are recorded using the 50 Mbps format. **16*9/25M:** (16:9) signals are recorded using the 25 Mbps format. **4*3/25M:** (4:3) signals are recorded using the 25 Mbps format.
PB MODE	AUTO 50M 25M	USER ENG	This selects the playback mode. **AUTO:** Mode in which the tape is played back after the recording mode is detected automatically. **50M:** The tape is played back in the 50M mode. **25M:** The tape is played back in the 25M mode.
RET SW	REC CHECK CAM RET MARK*	USER ENG	This selects the RET switch function. **REC CHECK:** The REC CHECK operation is performed. **CAM RET:** The return signal output operation is performed. **(MARK):** The MARK switch operation is performed.

*This is displayed when the Picture Link adaptor board (AJ-YAP900, optional accessory) has been installed.

The underlining in the variable range column indicates the setting in the preset mode.

USER menu: The USER menu appears when the MENU switch is set to SET.
ENG menu: The ENG menu appears when the MENU switch is set to SET while the SHIFT/ITEM button and UP button are held down together.

MIC/AUDIO screen

The MIC/AUDIO items are set on this screen.

```
   →< MIC/AUDIO >
FRONT POWER      :ON
FRONT MIC        :−40dB
REAR MIC CH1     :−60dB
REAR MIC CH2     :−60dB
LINE CH1/CH2     :+4dB
REAR AUDIO       :STEREO
MIC LOW CUT CH1  :FRONT
MIC LOW CUT CH2  :FRONT
EMPHASIS         :OFF
LIMITER          :OFF
TEST TONE        :NORMAL
```

Item	Variable range	VF display	Remarks
FRONT POWER	ON OFF	ENG	**ON:** The phantom power is supplied to the front microphone. **OFF:** The phantom power is not supplied to the front microphone.
FRONT MIC	−40/−50/ 60 dB	ENG	This selects the camera mic input level.
REAR MIC CH1	−40/−50/ −60 dB	ENG	This selects the mic level of the rear AUDIO CH1 input jack.
REAR MIC CH2	−40/−50/ −60 dB	ENG	This selects the mic level of the rear AUDIO CH2 input jack.
LINE CH1/CH2	+4/0/ −6 dB	ENG	This selects the line input level of the rear AUDIO CH1 and CH2 input jacks.
REAR AUDIO	STEREO MONO	ENG	This selects the rear jack AUDIO CH1 and CH2 input method. **STEREO:** Stereo input is selected. (The CH1 input signals are recorded on CH1 and the CH2 input signals are recorded on CH2.) **MONO:** Monaural input is selected. (The CH1 and CH2 input signals are mixed, and the mixed signals are recorded on both CH1 and CH2.)
MIC LOWCUT CH1	FRONT REAR F&R OFF	ENG	**FRONT:** The CH1 input high-pass filter is set to ON only when FRONT is selected. **REAR:** The CH1 input high-pass filter is set to ON only when REAR is selected. **F&R:** The CH1 input high-pass filter is set to ON regardless of whether FRONT or REAR is selected. **OFF:** The CH1 input high-pass filter is set to OFF.
MIC LOWCUT CH2	FRONT REAR F&R OFF	ENG	**FRONT:** The CH2 input high-pass filter is set to ON only when FRONT is selected. **REAR:** The CH2 input high-pass filter is set to ON only when REAR is selected. **F&R:** The CH2 input high-pass filter is set to ON regardless of whether FRONT or REAR is selected. **OFF:** The CH2 input high-pass filter is set to OFF.

<**Note**>
- The frequency response when ON is selected for the MIC LOWCUT item setting is 200 Hz to 10 kHz.

The underlining in the variable range column indicates the setting in the preset mode.

USER menu: The USER menu appears when the MENU switch is set to SET.
ENG menu: The ENG menu appears when the MENU switch is set to SET while the SHIFT/ITEM button and UP button are held down together.

MAIN Menu Screen 3 of 4 (SUB menus)

```
   →< MIC/AUDIO >
FRONT POWER      :ON
FRONT MIC        :−40dB
REAR MIC CH1     :−60dB
REAR MIC CH2     :−60dB
LINE CH1/CH2     :+4dB
REAR AUDIO       :STEREO
MIC LOW CUT CH1  :FRONT
MIC LOW CUT CH2  :FRONT
EMPHASIS         :OFF
LIMITER          :OFF
TEST TONE        :NORMAL
```

Item	Variable range	VF display	Remarks
EMPHASIS	ON OFF	ENG	This selects ON or OFF for the emphasis during recording. The EE output signals are also linked with the setting of this switch.
LIMITER	ON OFF	ENG	This selects ON or OFF for the audio limiter. **ON:** The audio limiter will be activated. **OFF:** The audio limiter will not be activated.
TEST TONE	NORMAL ALWAYS OFF CHSEL	ENG	**NORMAL:** The test tone signal is output when the CAM/BAR switch is set to BAR and the AUDIO IN switch CH1 is set to FRONT. **ALWAYS:** The test tone signal is output when the CAM/BAR switch is set to BAR. **OFF:** The test tone signal is not output. **CHSEL:** The test tone signal is output to the selected channel when the CAM/BAR switch is set to BAR and the AUDIO IN CH1 and/or CH2 switch is set to FRONT.

<**Notes**>
- The LIMITER item initiates the limiter operation at a level equivalent to 3 dB below the peak (+18 dB).
- The AUDIO SELECT initiates the limiter operation at the MAN setting and the AGC operation at the AUTO setting.

The underlining in the variable range column indicates the setting in the preset mode.

USER menu: The USER menu appears when the MENU switch is set to SET.
ENG menu: The ENG menu appears when the MENU switch is set to SET while the SHIFT/ITEM button and UP button are held down together.

GENLOCK/IRIS screen

The GENLOCK and IRIS control settings are performed on this screen.

```
→< GENLOCK/IRIS >

GENLOCK          :INT
H PHASE COARSE   :07
H PHASE FINE     :128
SC PHASE COARSE  :0
SC PHASE FINE    :128
A.IRIS LEVEL     :050
A.IRIS PEAK/AVE  :050
A.IRIS MODE      :NORM1
S.IRIS LEVEL     :100
```

Item	Variable range	VF display	Remarks
GENLOCK	EXT INT	ENG	This sets the cyclical signal of the camera signal. **INT:** Synchronization with the internal reference signals that are not related to the reference signals input to the GENLOCK IN/(VIDEO IN) connector. **EXT:** Synchronization with the reference signal which is input to the GENLOCK IN/(VIDEO IN) connector.
H PHASE COARSE	0 ⋮ 7 ⋮ 15	ENG	For the coarse adjustment of the H phase in the genlock mode.
H PHASE FINE	0 ⋮ 128 ⋮ 255	ENG	For the fine adjustment of the H phase in the genlock mode.
SC PHASE COARSE	0 ⋮ 3	ENG	For the coarse adjustment of the SC phase in the genlock mode.
SC PHASE FINE	0 ⋮ 128 ⋮ 255	ENG	For the fine adjustment of the SC phase in the genlock mode.
A.IRIS LEVEL	0 ⋮ 50 ⋮ 100	ENG	This sets the target value for the auto iris. The brightness (iris) is controlled using this value. The higher the number selected, the greater the brightness.
A.IRIS PEAK/ AVE	0 ⋮ 50 ⋮ 100	ENG	This sets the auto iris peak/average value ratio. The closer the selected value is to 0, the more the type of control is exercised toward AVE control; the closer it is to 100, the more it is exercised toward PEAK control.
A.IRIS MODE	NORM1 NORM2 CENTR	ENG	This selects the auto iris mode. **NORM1:** Light metering over the entire screen (except the edges). **NORM2:** Light metering over the entire screen (except the top). **CENTR:** Light metering at the screen center only.
S.IRIS LEVEL	0 ⋮ 100	ENG	This sets the target value for the super iris. (Backlight compensation mode)

The underlining in the variable range column indicates the setting in the preset mode.

USER menu: The USER menu appears when the MENU switch is set to SET.
ENG menu: The ENG menu appears when the MENU switch is set to SET while the SHIFT/ITEM button and UP button are held down together.

MAIN Menu Screen 3 of 4 (SUB menus)

VIDEO OUT screen

The VIDEO OUT items are set on this screen.

```
→< VIDEO OUT >

VIDEO OUT SEL:ENC
CHARACTER     :ON
```

Item	Variable range	VF display	Remarks
VIDEO OUT SEL	MONI ENC	ENG	This selects whether to switch the VIDEO OUT signals to monitor signals or to the encoder signals.
CHARACTER	ON OFF	ENG	This selects whether to display characters in the VIDEO OUT signals. **ON:** Characters are displayed. **OFF:** Characters are not displayed.

TIME/DATE screen

The date and time are set on this screen. When the UP or DOWN button is pressed after the date and/or time have been changed, the settings will be entered.

```
→< TIME/DATE >

   YEAR   :99
   MONTH  :01
   DAY    :01
   HOUR   :00
   MINUTE:00

  ■TIME/DATE SET
```

Item	Variable range	VF display	Remarks
YEAR	00 to 99	ENG	This sets the year.
MONTH	1 to 12	ENG	This sets the month.
DAY	1 to 31	ENG	This sets the day.
HOUR	0 to 23	ENG	This sets the hours.
MINUTE	0 to 59	ENG	This sets the minutes.
TIME/DATE SET	——	ENG	This enters the time/date settings.

□**Note**□
Seconds cannot be set. The time always starts from the zero second setting.

LENS SEL/ADJ screen

The lens adjustment items are set on this screen.

```
→< LENS SEL/ADJ >

  LENS SELECT:NORM
  F2.8 ADJ    :OFF
  F16 ADJ     :OFF
```

Item	Variable range	VF display	Remarks
LENS SELECT	NORM R.COV	ENG	**NORM:** This is selected when the normal lens is used. **R.COV:** This is selected when a lens with an X0.8 ratio converter is used.
F2.8 ADJ	ON OFF	ENG	The voltage is output only when selected to ON.
F16 ADJ	ON OFF	ENG	The voltage is output only when selected to ON.

□**Note**□
When using a lens which enables the open and close limits of the lens iris to be adjusted, set either F2.8 ADJ or F16 ADJ to ON, and repeatedly adjust the lens iris until it is set to F2.8 or F16, respectively. (This adjustment need not be performed if the lens does not have this adjustment function.)

The underlining in the variable range column indicates the setting in the preset mode.

USER menu: The USER menu appears when the MENU switch is set to SET.
ENG menu: The ENG menu appears when the MENU switch is set to SET while the SHIFT/ITEM button and UP button are held down together.

USER MENU SEL 1 of 3 screen

The menu page displays are set to ON or OFF on this screen. Before each screen item is an asterisk (“□”) or dot (“.”) which respectively indicates whether the setting is ON or OFF.

```
→< USER MENU SEL1/3 >

    *ROP
    ·MATRIX
    ·LOW SETTING
    ·MID SETTING
    ·HIGH SETTING
    ·ADDITIONAL DTL
    ·SKIN TONE DTL
    ·KNEE/LEVEL
    ·FLARE/GAMMA
    ·CAMERA SETTING
```

□: ON
·: OFF

Item	Variable range	VF display	Remarks
ROP	<u>ON</u> OFF	ENG	This selects ON or OFF for the user menu display of the ROP MENU item.
MATRIX	ON <u>OFF</u>	ENG	This selects ON or OFF for the user menu display of the MATRIX item.
LOW SETTING	ON <u>OFF</u>	ENG	This selects ON or OFF for the user menu display of the LOW SETTING item.
MID SETTING	ON <u>OFF</u>	ENG	This selects ON or OFF for the user menu display of the MID SETTING item.
HIGH SETTING	ON <u>OFF</u>	ENG	This selects ON or OFF for the user menu display of the HIGH SETTING item.
ADDITIONAL DTL	ON <u>OFF</u>	ENG	This selects ON or OFF for the user menu display of the ADDITIONAL DTL item.
SKIN TONE DTL	ON <u>OFF</u>	ENG	This selects ON or OFF for the user menu display of the SKIN TONE DTL item.
KNEE/LEVEL	ON <u>OFF</u>	ENG	This selects ON or OFF for the user menu display of the KNEE/LEVEL item.
FLARE/GAMMA	ON <u>OFF</u>	ENG	This selects ON or OFF for the user menu display of the FLARE/GAMMA item.
CAMERA SETTING	ON <u>OFF</u>	ENG	This selects ON or OFF for the user menu display of the CAMERA SETTING item.

The underlining in the variable range column indicates the setting in the preset mode.

USER menu: The USER menu appears when the MENU switch is set to SET.
ENG menu: The ENG menu appears when the MENU switch is set to SET while the SHIFT/ITEM button and UP button are held down together.

USER MENU SEL 2 of 3 screen

The menu page displays are set to ON or OFF on this screen. Before each screen item is an asterisk (“□”) or dot (“.”) which respectively indicates whether the setting is ON or OFF.

```
→< USER MENU SEL2/3 >

    *VF DISPLAY
    *VF INDICATOR
    *CAMERA ID
    ·SHUTTER SPEED
    *SYNCHRO SCAN
    ·!LED
    ·CAMERA SW MODE
    ·SUPER GAIN
    ·VTR FUNCTION
    ·BATT/TAPE ALARM
```

□: ON
·: OFF

Item	Variable range	VF display	Remarks
VF DISPLAY	<u>ON</u> OFF	ENG	This selects ON or OFF for the user menu display of the VF DISPLAY item.
VF INDICATOR	<u>ON</u> OFF	ENG	This selects ON or OFF for the user menu display of the VF INDICATOR item.
CAMERA ID	<u>ON</u> OFF	ENG	This selects ON or OFF for the user menu display of the CAMERA ID item.
SHUTTER SPEED	ON <u>OFF</u>	ENG	This selects ON or OFF for the user menu display of the SHUTTER SPEED item.
SYNCHRO SCAN	<u>ON</u> OFF	ENG	This selects ON or OFF for the user menu display of the SYNCHRO SCAN item.
!LED	ON <u>OFF</u>	ENG	This selects ON or OFF for the user menu display of the !LED item.
CAMERA SW MODE	ON <u>OFF</u>	ENG	This selects ON or OFF for the user menu display of the CAMERA SW MODE item.
SUPER GAIN	ON <u>OFF</u>	ENG	This selects ON or OFF for the user menu display of the SUPER GAIN item.
VTR FUNCTION	ON <u>OFF</u>	ENG	This selects ON or OFF for the user menu display of the VTR FUNCTION item.
BATT/TAPE ALARM	ON <u>OFF</u>	ENG	This selects ON or OFF for the user menu display of the BATT/TAPE ALARM item.

The underlining in the variable range column indicates the setting in the preset mode.

USER menu: The USER menu appears when the MENU switch is set to SET.
ENG menu: The ENG menu appears when the MENU switch is set to SET while the SHIFT/ITEM button and UP button are held down together.

USER MENU SEL 3 of 3 screen

The menu page displays are set to ON or OFF on this screen. Before each screen item is an asterisk (“□”) or dot (“.”) which respectively indicates whether the setting is ON or OFF.

```
→< USER MENU SEL3/3 >

    *CARD READ/WRITE
    ·CARD R/W SELECT
    *REC(ASPECT)/PB/RET
    ·MIC/AUDIO
    ·GENLOCK/IRIS
    ·VIDEO OUT
    ·TIME/DATE
    ·LENS SEL/ADJ
```

□: ON
·: OFF

Item	Variable range	VF display	Remarks
CARD READ/ WRITE	<u>ON</u> OFF	ENG	This selects ON or OFF for the user menu display of the CARD READ/ WRITE item.
CARD R/W SELECT	ON <u>OFF</u>	ENG	This selects ON or OFF for the user menu display of the CARD R/W SELECT item.
REC (ASPECT)/ PB/RET	<u>ON</u> OFF	ENG	This selects ON or OFF for the user menu display of the REC (ASPECT)/ PB/RET item.
MIC/AUDIO	ON <u>OFF</u>	ENG	This selects ON or OFF for the user menu display of the MIC/AUDIO item.
GENLOCK/IRIS	ON <u>OFF</u>	ENG	This selects ON or OFF for the user menu display of the GENLOCK/IRIS item.
VIDEO OUT	ON <u>OFF</u>	ENG	This selects ON or OFF for the user menu display of the VIDEO OUT item.
TIME/DATE	ON <u>OFF</u>	ENG	This selects ON or OFF for the user menu display of the TIME/DATE item.
LENS SEL/ADJ	ON <u>OFF</u>	ENG	This selects ON or OFF for the user menu display of the LENS SEL/ADJ item.

The underlining in the variable range column indicates the setting in the preset mode.

USER menu: The USER menu appears when the MENU switch is set to SET.
ENG menu: The ENG menu appears when the MENU switch is set to SET while the SHIFT/ITEM button and UP button are held down together.

AUTO SHADING screen

The AUTO SHADING items are set on this screen. Align the arrow with the BLACK or WHITE item and press the UP or DOWN button to initiate the corresponding operation.

```
→< AUTO SHADING >

  BLACK
  WHITE
  BLACK COMPE   :ON
  WHITE COMPE   :ON
```

Item	Variable range	VF display	Remarks
BLACK	——	ENG	This initiates AUTO BLACK SHADING (DIGITAL start).
WHITE	——	ENG	This initiates AUTO WHITE SHADING.
BLACK COMPE	ON OFF	ENG	This selects ON or OFF for the digital black shading compensation.
WHITE COMPE	ON OFF	ENG	This selects ON or OFF for the digital white shading compensation.

□**Note**□
When the AUTO W/B BAL switch is held down at the ABB position for 6 or more seconds, the auto black shading compensation is performed automatically.

EVALUATION screen

The items on this screen are set when an evaluation is to be performed.

```
→< EVALUATION >

S/N             :OFF
MODULATION      :OFF
RESOLUTION      :OFF
SENSITIVITY     :OFF
```

Item	Variable range	VF display	Remarks
S/N	ON OFF	ENG	This sets the signal-to-noise ratio measurement to ON or OFF.
MODULATION	ON OFF	ENG	This sets the modulation measurement to ON or OFF.
RESOLUTION	ON OFF	ENG	This sets the resolution measurement to ON or OFF.
SENSITIVITY	ON OFF	ENG	This sets the sensitivity measurement to ON or OFF.

The underlining in the variable range column indicates the setting in the preset mode.

USER menu: The USER menu appears when the MENU switch is set to SET.
ENG menu: The ENG menu appears when the MENU switch is set to SET while the SHIFT/ITEM button and UP button are held down together.

S/N measurement screen

The settings for the signal-to-noise ratio measurement are performed on this screen.

```
    < EVALUATION >
→S/N            :OFF
  DETAIL        :OFF
  H−F COMP      :OFF
  GAMMA         :OFF
  MATRIX        :OFF
  FLARE         :OFF
  M.PED         :+00
  VIDEO OUT     :Y
```

Item	Variable range	VF display	Remarks
S/N	ON OFF	ENG	This selects ON or OFF for the S/N ratio setting.
DETAIL	ON OFF	ENG	This selects ON or OFF for DTL.
H-F COMP	ON OFF	ENG	This selects ON or OFF for H-F COMP.
GAMMA	ON OFF	ENG	This selects ON or OFF for GAMMA.
MATRIX	ON OFF	ENG	This selects ON or OFF for MATRIX.
FLARE	ON OFF	ENG	This selects ON or OFF for FLARE.
M.PED	□100 ⋮ □0 ⋮ □100	ENG	This adjusts the master pedestal.
VIDEO OUT	ENC Y R G B	ENG	This switches the VIDEO OUT.

The underlining in the variable range column indicates the setting in the preset mode.

USER menu: The USER menu appears when the MENU switch is set to SET.
ENG menu: The ENG menu appears when the MENU switch is set to SET while the SHIFT/ITEM button and UP button are held down together.

Modulation measurement screen

The settings for the modulation measurement are performed on this screen.

```
    < EVALUATION >
→MODULATION      :OFF
    DETAIL       :OFF
    H-F COMP     :OFF
    GAMMA        :OFF
    MATRIX       :OFF
    FLARE        :OFF
    M.PED        :+00
    VIDEO OUT    :Y
```

Item	Variable range	VF display	Remarks
MODULATION	ON OFF	ENG	This selects ON or OFF for the modulation measurement.
DETAIL	ON OFF	ENG	This selects ON or OFF for DTL.
H-F COMP	ON OFF	ENG	This selects ON or OFF for H-F COMP.
GAMMA	ON OFF	ENG	This selects ON or OFF for GAMMA.
MATRIX	ON OFF	ENG	This selects ON or OFF for MATRIX.
FLARE	ON OFF	ENG	This selects ON or OFF for FLARE.
M.PED	□100 ⋮ □0 ⋮ □100	ENG	This adjusts the master pedestal.
VIDEO OUT	ENC Y R G B	ENG	This switches the VIDEO OUT.

The underlining in the variable range column indicates the setting in the preset mode.

USER menu: The USER menu appears when the MENU switch is set to SET.
ENG menu: The ENG menu appears when the MENU switch is set to SET while the SHIFT/ITEM button and UP button are held down together.

Resolution measurement screen

The settings for the resolution measurement are performed on this screen.

```
    < EVALUATION >
→RESOLUTION      :OFF
   DETAIL        :OFF
   H−F COMP      :OFF
   GAMMA         :OFF
   MATRIX        :OFF
   FLARE         :OFF
   M.PED         :+00
   VIDEO OUT     :Y
```

Item	Variable range	VF display	Remarks
RESOLUTION	ON OFF	ENG	This selects ON or OFF for the resolution measurement.
DETAIL	ON OFF	ENG	This selects ON or OFF for DTL.
H-F COMP	ON OFF	ENG	This selects ON or OFF for H-F COMP.
GAMMA	ON OFF	ENG	This selects ON or OFF for GAMMA.
MATRIX	ON OFF		This selects ON or OFF for MATRIX.
FLARE	ON OFF		This selects ON or OFF for FLARE.
M.PED	□100 ⋮ □0 ⋮ □100		This adjusts the master pedestal.
VIDEO OUT	ENC Y R G B		This switches the VIDEO OUT.

The underlining in the variable range column indicates the setting in the preset mode.

USER menu: The USER menu appears when the MENU switch is set to SET.
ENG menu: The ENG menu appears when the MENU switch is set to SET while the SHIFT/ITEM button and UP button are held down together.

Sensitivity measurement screen

The settings for the sensitivity measurement are performed on this screen.

```
    < EVALUATION >
→SENSITIVITY    :OFF
   KNEE         :OFF
   W.CLIP       :OFF
   M.PED        :+00
   VIDEO OUT    :Y
```

Item	Variable range	VF display	Remarks
SENSITIVITY	ON OFF	ENG	This selects ON or OFF for the sensitivity measurement.
KNEE	ON OFF	ENG	This selects ON or OFF for KNEE.
W.CLIP	ON OFF	ENG	This selects ON or OFF for W.CLIP.
M.PED	□100 ⋮ □0 ⋮ □100	ENG	This adjusts the master pedestal.
VIDEO OUT	ENC Y R G B	ENG	This switches the VIDEO OUT.

The underlining in the variable range column indicates the setting in the preset mode.

USER menu: The USER menu appears when the MENU switch is set to SET.
ENG menu: The ENG menu appears when the MENU switch is set to SET while the SHIFT/ITEM button and UP button are held down together.

MAIN Menu Screen 4 of 4 (SUB menus)

INITIALIZE screen

The MENU display item settings are reset on this screen. Align the arrow (→) with the item and press the UP or DOWN button to initiate the corresponding operation.

```
→< INITIALIZE >

READ FACTORY DATA
WRITE USER DATA
```

Item	Variable range	VF display	Remarks
READ FACTORY DATA	——	ENG	This returns the menu data to the factory settings.
WRITE USER DATA	——	ENG	This saves the menu data inherent to the user in the camera's memory.

□**Note**□
The camera ID is not returned to the factory setting.

DIAGNOSTIC screen

The unit's operating statuses and software version are displayed on this screen.

```
< DIAGNOSTIC >
OPERATION    :00000 ×10h
DRUM RUNNING:00000 ×10h
THREADING    :00000 ×10

VTR SYSCON   Ver<P×.××>
CAM SYSCON   Ver<×.×>×.×
DATA ROM     Ver<×.×>
DV           Ver<×.××   >
                 ××.××.××
```

Item	Variable range	VF display	Remarks
OPERATION	——	ENG	Unit's operating time with the power ON
DRUM RUNNING	——	ENG	Rotating time of the drum
THREADING	——	ENG	Number of times the tape has been loaded
VTR SYSCON	——	ENG	Software version display
CAM SYSCON	——	ENG	Software version display
DATA ROM	——	ENG	Software version display
DV	——	ENG	Software version display

□The DIAGNOSTIC screen can be displayed on the viewfinder when the MENU SET/OFF switch is set to SET while the HOLD button is held down, and the PAGE switch is pressed.

The underlining in the variable range column indicates the setting in the preset mode.

USER menu: The USER menu appears when the MENU switch is set to SET.
ENG menu: The ENG menu appears when the MENU switch is set to SET while the SHIFT/ITEM button and UP button are held down together.

REMOTE menu screen

REMOTE FUNCTION screen

This is the index page for opening the submenu screens.

```
→**** REMOTE ****
 VF IND.(REMOTE)
 !LED(REMOTE)
 TALLY/RET(REMOTE)
```

Item	Variable range	VF display	Remarks
VF IND. (REMOTE)	——	ENG	Index for opening the submenu.
!LED (REMOTE)	——	ENG	Index for opening the submenu.
TALLY/RET (REMOTE)	——	ENG	Index for opening the submenu.

□Align the cursor with the page item and press the UP or DOWN switch to open the submenu.

VF IND. (REMOTE) screen

The display of the various information items appearing inside the viewfinder in the remote control mode is set ON or OFF on this screen.

```
→< VF IND.(REMOTE) >
  EXTENDER    :OFF
  SHUTTER     :OFF
  TAPE        :OFF
  BATTERY     :OFF
  FILTER      :OFF
  WHITE       :OFF
  GAIN        :OFF
  LEVEL METER:OFF
  IRIS        :OFF
  CAMERA ID   :OFF
  DATE/TIME   :OFF
```

Item	Variable range	VF display	Remarks
EXTENDER	ON OFF	USER ENG	Extender display
SHUTTER	ON OFF	USER ENG	Shutter speed display
TAPE	ON OFF	USER ENG	Remaining tape display
BATTERY	ON OFF	USER ENG	Battery voltage display
FILTER	ON OFF	USER ENG	Filter No. display
WHITE	ON OFF	USER ENG	AWB PRST/A/B setting display
GAIN	ON OFF	USER ENG	Currently selected gain display
LEVEL METER	OFF/CH1/ CH1□CH2	USER ENG	Audio level meter display and selection
IRIS	S/S□IRIS/ IRIS/OFF	USER ENG	Iris position display
CAMERA ID	ON OFF	USER ENG	ID display in color bar mode
DATE/TIME	ON OFF	USER ENG	Date (year/month/day) and time (hours/minutes/seconds) display in color bar mode

The underlining in the variable range column indicates the setting in the preset mode.

USER menu: The USER menu appears when the MENU switch is set to SET.
ENG menu: The ENG menu appears when the MENU switch is set to SET while the SHIFT/ITEM button and UP button are held down together.

!LED (REMOTE) screen

The display of the various !LED information items appearing inside the viewfinder in the remote control mode is set ON or OFF on this screen.

```
→< !LED(REMOTE) >

  GAIN(0dB)       :OFF
  GAIN(−3dB)      :OFF
  SHUTTER         :OFF
  WHITE PRESET    :OFF
  EXTENDER        :OFF
  FILTER          :OFF
  SUPER V         :OFF
  25M/50M         :OFF
```

□If both GAIN (0 dB) and GAIN (□3 dB) have been set to ON at the same time, !LED will light on condition that settings other than 0 dB and □3 dB have been respectively selected for the two GAIN items.

□**Note**□
This screen is valid only in the remote control mode. When it is valid, what has been set on the !LED screen has no effect.

Item	Variable range	VF display	Remarks
GAIN (0 dB)	ON OFF	ENG	**ON:** This display lights when a setting other than 0 dB has been selected for the gain. **OFF:** The display does not light.
GAIN (□3 dB)	ON OFF	ENG	**ON:** This display lights when a setting other than □3 dB has been selected for the gain. **OFF:** The display does not light.
SHUTTER	ON OFF	ENG	**ON:** This display lights when the shutter (except with SUPER V) is ON. **OFF:** The display does not light.
WHITE PRESET	ON OFF	ENG	**ON:** This display lights when the AWB has been set to PRST (PRESET). **OFF:** The display does not light.
EXTENDER	ON OFF	ENG	**ON:** This display lights when the extender is used for the lens. **OFF:** The display does not light.
FILTER	ON OFF	ENG	**ON:** This display lights when a setting other than 3200K has been selected for the filter. **OFF:** The display does not light.
SUPER V	ON OFF	ENG	**ON:** This display lights when SUPER V is ON. **OFF:** The display does not light.
25M/50M	25M 50M OFF	ENG	**25M:** This display lights when the REC MODE has been set to 50M. **50M:** This display lights when the REC MODE has been set to 25M. **OFF:** The display does not light.

TALLY/RET (REMOTE) screen

The setting for the lighting of the tally lamp during recording and return switch setting are selected on this screen.

```
→< TALLY/RET(REMOTE) >

  REC TALLY:RED
  RET SW   :CAM RET
```

□**Note**□
This screen is valid only in the remote control mode. When it is valid, what has been set on the MAIN FUNCTION screen has no effect.

Item	Variable range	VF display	Remarks
REC TALLY	RED GREEN CHARA	ENG	For selecting the method used to advise the user that recording is underway. **RED:** The red tally lamp lights. **GREEN:** The green tally lamp lights. **CHARA:** The character lamp lights.
RET SW	CAM RET REC CHECK	ENG	For selecting the return switch function. **CAM RET:** The return signal output operation is performed. **REC CHECK:** The REC CHECK operation is performed.

The underlining in the variable range column indicates the setting in the preset mode.

USER menu: The USER menu appears when the MENU switch is set to SET.
ENG menu: The ENG menu appears when the MENU switch is set to SET while the SHIFT/ITEM button and UP button are held down together.

Warning System

If trouble is detected immediately after the power is turned on or during operation, the display window (LCD), WARNING lamp, lamps inside the viewfinder, and warning tones from the speaker and earphone inform the operator of trouble.

Item	Display window (LCD)				Lamps		Warning tone	Warning contents	VTR (section) operation	Countermeasures
	Warning display	Warning display status	Remaining battery level display	Remaining tape length display	WARNING lamp	REC lamp				
RF	RF	Flashes 1)			Flashes 4 times per second	Flashes 4 times per second	Emitted 4 times per second 1)	Video head clogging, recording system trouble	Head clogging is detected and a warning tone emitted. Images may not be recorded properly. RF flashing status can be held until REC/PAUSE mode is activated, and it goes off when REC/PAUSE mode is released.	Clean the heads. If images still cannot be recorded properly after the heads are cleaned, consult your dealer.
SERVO	SERVO	Lighted			Flashes 4 times per second	Flashes 4 times per second	Emitted 4 times per second	The servo is out of order.	Recording continues, but images may not be recorded properly.	Turn off the power and consult your dealer. (Lamps may flash briefly and then go off when tape running starts, but this does not indicate trouble.)
HUMID	HUMID	Lighted			Lighted	Flashes 4 times per second	Emitted 4 times per second 1) Continuous tone 2)	Condensation	Recording continues, but stops if tape sticking occurs. Playback, fast forward and rewind operation stops.	If tape running stops and the HUMID display does not go off even when the power is turned off and then on again, wait until the display goes off.
SLACK	SLACK	Flashes			Flashes 4 times per second	Flashes 4 times per second	Continuous tone	Tape wind-up trouble	An error code appears in the time code display position of the display window (LCD) and the VTR stops.	Check the error code in the display window (see page 151) and consult your dealer.

1) During recording
2) During playback, fast forward or rewind

Note
If a cleaning tape is not available to deal with video head clogging, etc., first establish the STOP mode and then press the STOP button again while the RESET button on the side panel is kept depressed. While these buttons are held down, the cleaning roller will clean the heads for a maximum of 10 seconds.

Warning System

Item	Display window (LCD)				Lamps		Warning tone	Warning contents	VTR (section) operation	Countermeasures
	Warning display	Warning display status	Remaining battery level display	Remaining tape length display	WARNING lamp	REC lamp				
TAPE END	E TAPE F	Flashes □1)		1 of the 7 bars displayed; 5-0 display inside the viewfinder flashes	Flashes 1 time per second□1)	Flashes 1 time per second	Emitted 4 times per second	The tape is nearing its end.	Operation continues.	Replace the tape as necessary.
		Flashes		All 7 bars displayed	Lighted	Flashes 4 times per second	Continuous tone	The tape has reached its end.	Recording, playback or fast forward operation stops.	Replace the cassette or rewind the tape.
BATTERY END	E BATT F	Flashes	1 of the 7 bars displayed		Flashes 1 time per second	Flashes 1 time per second	Emitted 4 times per second□1)	The battery has almost run out.	Operation continues.	Replace the battery as necessary.
		Flashes	All 7 bars displayed		Lighted	Flashes 1 time per second□3)	Continuous tone	The battery has run out.	Operation stops.	Replace the battery.
No display	No display				Flashes 4 times per second for 3 seconds	Flashes 4 times per second for 3 seconds	Emitted 4 times per second □1)	Memory status error between SYSCON and DV.	Error code [00:00:00:11] will be displayed for 5 seconds in the time code display position in the status display window. However, the main unit will be put into Enforced Recording mode and recording will continue.	Switch the power OFF and consult your local dealer.

□1) During recording
□2) During playback, fast forward or rewind
□3) During recording, the REC and BATT lamps flash in alternation.
When recording is paused (REC/PAUSE), the REC and BATT lamps flash together.

□**Notes**□

□When trouble occurs with the external VTR connected to the unit, warnings are displayed only by the unit's REC and TALLY lamps.

□When connecting the external VTR to the 26-pin/12-pin output adaptor and recording simultaneously with the internal and external VTRs, the REC and TALLY lamps flash if trouble occurs in either VTR. Check the warning displays of each VTR to confirm the error contents.

Warning system priorities are as follows.

1 SLACK
2 BATTERY END
3 TAPE END
4 HUMID
5 SERVO
6 RF
7 BATTERY NEAR END
8 TAPE NEAR END

Condensation

If the unit is moved from a cold location to a warm location or used in areas with high humidity, the moisture in the air may adhere as water droplets on the head drum. This is called condensation, and if the tape is run under these conditions, it will easily stick to the drum. Therefore, the following points should be observed.

- If the unit is moved under conditions where condensation may occur, eject the tape.
- Before inserting the tape, set the POWER switch to ON and check that the HUMID display in the display window is not lighted. If the HUMID display is lighted, do not insert the tape until the display goes off.

Note

To ensure safe operation, MID continues to flash for 80 minutes after the condensation detection has been released. During this period, the function buttons will not respond even when they are operated.

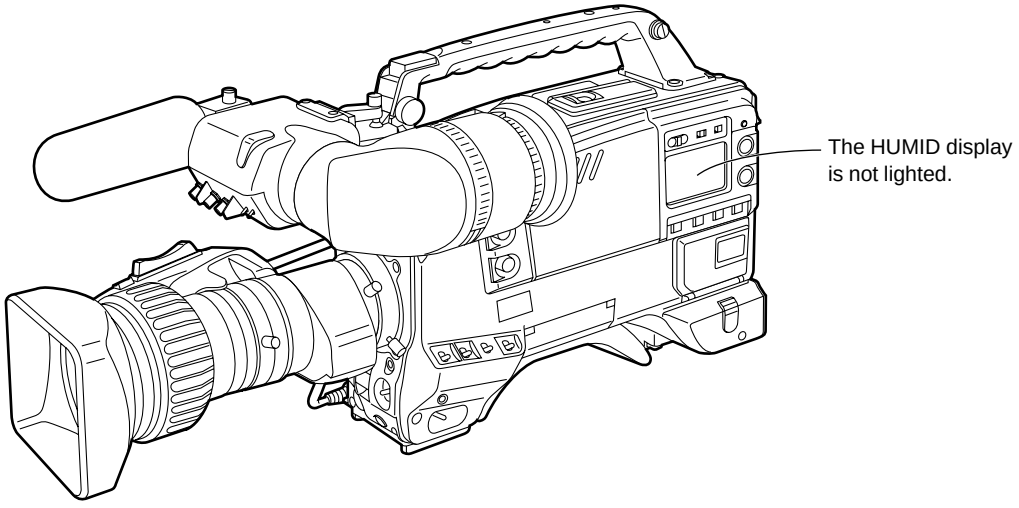

Cleaning the Video Heads

Use the AJ-CL12MP cleaning cassette when head cleaning is required. Improper use of the cleaning cassette may damage the video heads. Therefore, read the Handling Instructions for the cleaning tape carefully before use.

Cleaning the Viewfinder

- Do not use thinner or other solvents to remove dirt from the viewfinder.
- Wipe the lens with lens cleaner available on the market.
- Absolutely do not wipe the mirror. If dirt, etc. has adhered to the mirror, remove it using a air blower available on the market.

Characteristic Phenomenon of CCD Cameras

Smear

Smear occurs when shooting high-intensity subjects, and occurs more easily as the electronic shutter speed increases.

Inspections Before Shooting

Perform the following inspections before shooting to check that all systems are operating properly. Checking the image with a color monitor is recommended.

Inspection Preparations

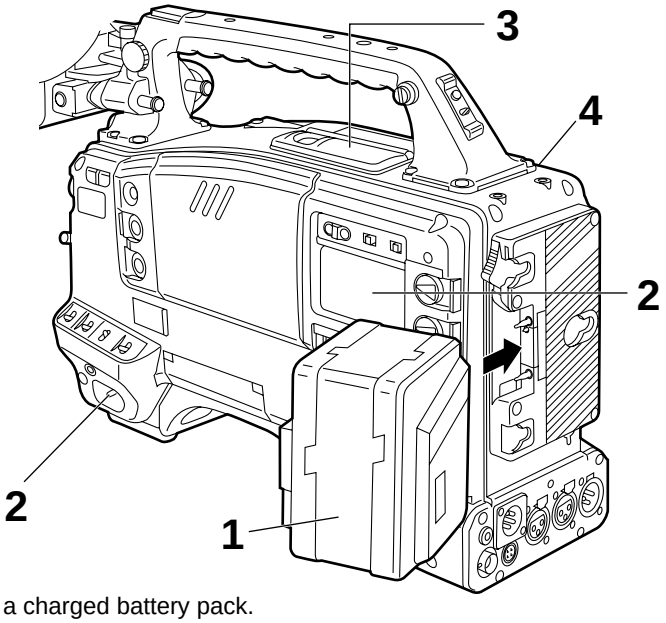

1 Insert a charged battery pack.

2 Set the POWER switch to ON and check that the HUMID display does not appear and that five or more bars of the remaining battery level display are lighted.
- If the HUMID display appears, wait until the display goes off.
- If five or more bars of the remaining battery level display are not lighted, replace the battery pack with a sufficiently charged battery pack.

3 Check that there are no cables, etc. around the cassette holder and top panel, and then press the EJECT button to open the cassette holder.

4 Check the following items, and then insert a cassette and close the cassette holder.
- The cassette is not set to the write protect status.
- There is no slack in the tape.

Inspecting the Camera Section

Set the switches as follows.

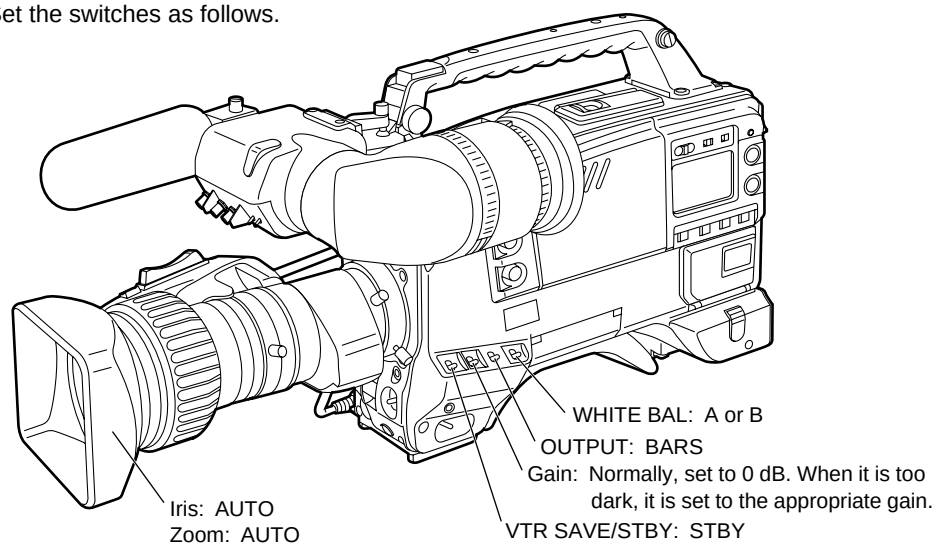

Inspecting the Viewfinder

1 Adjust the position of the viewfinder.

2 Check that the color bar appears on the viewfinder screen, and then adjust the BRIGHT, CONTRAST and PEAKING controls so that the color bar appears clearly on the viewfinder.

3 Check the following items.
(1) Press the PAGE button, and check that the setting MAIN menu appears on the viewfinder screen.
(2) Press the PAGE button, and check that the setting MAIN menu page changes.
(3) Press the SHIFT/ITEM button, and check that the cursor moves on the page.
(4) Press the UP or DOWN button, and check that one of the SUB menus opens.
(5) Press the SHIFT/ITEM button, and check that the cursor moves on the page.
(6) Press the UP or DOWN button, and check that the setting or ON/OFF display of the item selected by the cursor changes.

4 Set the OUTPUT/AUTO KNEE switch to CAM, and change the CC and ND filter knob settings. Check that the number of the FILTER display on the viewfinder screen changes in accordance with the knob position.

5 Perform the following operation and check that the (!) lamp lights when the items set to ON on the “(!) LED” SUB menu page of MAIN menu screen 2 of 4 are operated.
(1) Set the gain to any value other than 0 dB with the GAIN switch.
(2) Set the SHUTTER switch to ON.
(3) Set the WHITE BAL switch to PRST.
(4) Insert the lens extender.
(5) Set the FILTER knob to any position other than “1”.

6 Press the SHUTTER switch repeatedly from the ON position to the SEL side and check that the shutter setting on the viewfinder screen changes.

7 Aim the lens at an appropriate subject and turn the focus ring to bring the subject into focus. Check the image appearing in the viewfinder.

8 Set both the AUDIO IN CH1 and CH2 switches to “FRONT MIC”, and set LEVEL METER on the “VF INDICATOR” SUB menu page of the MAIN menu screen 2 of 4 to “CH1”.
Check that the audio level appears on the viewfinder screen when sound is input from the microphone which has been connected to the MIC IN jack on the front panel.
Check that the audio level display is cleared from the viewfinder screen when LEVEL METER on the “VF INDICATOR” SUB menu page of the MAIN menu screen 2 of 4 is set to “OFF”.

9 Check that the zebra pattern appears on the viewfinder screen when the ZEBRA switch is set to ON, and disappears when the ZEBRA switch is set to OFF.

□Note□
Depending on the setting conditions, the items and functions in steps 3 to 6 may not operate.
If this is the case, switch the unit to the engineer mode, set DISPLAY MODE on the “VF DISPLAY” menu page to “3”, and set the required items on the SHUTTER SPEED, (!) LED and USER MENU SELECT pages 1 of 3 to 3 of 3.

Inspecting the Iris and Zoom Functions

1 Set the zoom to electric zoom mode and check the electric zoom operation. Check that the image changes to telephoto and wide angle.

2 Set the zoom to manual zoom mode and check the manual zoom operation. Turn the manual zoom lever and check that the image changes to telephoto and wide angle.

3 Set the iris to automatic adjustment mode and aim the lens at subjects with differing brightness to check that the automatic iris adjustment functions.

4 Set the iris to manual adjustment mode and turn the iris ring to check the manual iris adjustment.

5 Hold down the instant iris automatic adjustment button and aim the lens at subjects with differing brightness to check the instant iris automatic adjustment performance.

6 Return the iris to automatic adjustment mode and change the GAIN switch setting toL, M and H to check the following items.
- The iris is adjusted with respect to subjects with the same brightness in accordance with the switch setting.
- The gain value display on the viewfinder screen changes in accordance with the switch setting.

7 When a lens with an extender is mounted, set the extender to the used position to check that the extender functions properly.

Perform “(1) Tape Running Inspections” to “(4) Earphone and Speaker Inspections” below consecutively.

Inspecting the VTR Section

(1) Tape Running Inspections

1 Set the VTR SAVE/STBY switch to SAVE and check that the VTR SAVE lamp inside the viewfinder lights.

2 Set the VTR SAVE/STBY switch to STBY and check that the VTR SAVE lamp goes off.

3 Set the F-RUN/R-RUN switch to R-RUN.

4 Set the DISPLAY switch to CTL.

5 Press the unit’s VTR START button and check the following items.
- The tape reels turn.
- The counter display number changes.
- The REC lamp inside the viewfinder lights.
- The RF and SERVO lamps in the display window do not light.

6 Press the unit’s VTR START button again. Check that the tape stops and the REC lamp inside the viewfinder goes off.

7 Check the same operations as in steps 5 and 6 using the VTR button of the lens.

8 Press the RESET button and check that the counter display number changes to “00:00:00:00”.

9 Set the LIGHT switch to ON and check that the display window is illuminated.

10 Press the REW button to rewind the tape for a few moments, and then press the PLAY/PAUSE button. Check that the recording, playback and rewind operations are performed properly.

11 Press the FF button and check that fast forward operation is performed properly.

(2) Inspection of Audio Level Automatic Adjustment Functions

1. Set the AUDIO SELECT CH1/CH2 switch to AUTO.
2. Set the AUDIO IN CH1/CH2 switch to FRONT [MIC].
3. Aim a microphone connected to the MIC IN jack at an appropriate sound source and check that the level display for both CH1 and CH2 changes in accordance with the sound level.

(3) Inspection of Audio Level Manual Adjustment Functions

1. Set the AUDIO IN CH1/CH2 switch to FRONT [MIC].
2. Set the AUDIO SELECT CH1/CH2 switch to MAN.
3. Turn the AUDIO LEVEL CH1/CH2 controls and check that the level display increases when the controls are turned to the right.

(4) Earphone and Speaker Inspections

1. Set the VTR SAVE/STBY switch to STBY.
2. Turn the MONITOR control and check that the speaker volume changes.
3. Connect an earphone to the PHONES jack. Check that the sound to the speaker is cut off and that the microphone sound can be heard from the earphone.
4. Turn the MONITOR control and check that the earphone volume changes.

(5) Inspections when Using an External Microphone

1. Connect an external microphone to the AUDIO IN CH1 and CH2 connectors.
2. Set the AUDIO IN CH1/CH2 switch to REAR [MIC].
3. Aim the microphone at a sound source and check that the audio level meter in the display window and the audio level display inside the viewfinder change in accordance with the sound level. Each channel can also be checked separately by connecting a single microphone to each channel.

(6) Time Code and User Bit-Related Inspections

1. Set the user bit as necessary.
   See “Setting the User Bit” (page 84) for a description of setting methods.
2. Set the time code.
   See “Setting the Time Code” (page 83) for a description of setting methods.
3. Set the F-RUN/R-RUN switch to R-RUN.
4. Press the VTR START button.
   Check that the tape runs and the counter display number changes.
5. Press the VTR START button again.
   Check that the tape stops and the counter display number stops changing.
6. Set the F-RUN/R-RUN switch to F-RUN.
   Check that the counter display number changes regardless of the tape running status.
7. Set the DISPLAY switch to UB.
   Check that the set user bit is displayed.

Specifications

General

Power supply voltage:	DC 12 V
Power consumption:	28 W

Operating temperature:	32□F to 104□F (0□C to 40□C)
Storage temperature:	□4□F to 140□F (□20□C to 60□C)
Operating humidity:	10% to 85% (relative humidity)
Continuous operating time:	Approx. 90 min. (using 1 Anton Bauer Trimpac 14 battery)
Weight:	14.52 lbs (6.6 kg) (incld. main unit, viewfinder, lens, battery pack, tape and microphone)
Dimensions:	$4^{13}/_{16}$ (W)□$8^{1}/_{16}$ (H) (excluding grip)□$12^{3}/_{8}$ (D) inch 122.5□204□313 mm

Camera Section

Pick-up devices:	2/3-type, on-chip IT type of CCD
System:	RGB 3-CCD system
Picture elements:	520,000 pixels
Spectral system:	F1.4 prism system
Built-in filters:	1; 3200 K 2; 5600 K□1/8 ND 3; 5600 K 4; 5600 K□1/64 ND
Quantization:	10-bit A/D (R, G and B channels each)
Digital signal processing:	16-bit long operation, 18 MHz/36 MHz
Horizontal drive frequency:	18.0 MHz
Programmable gains:	Any 3 position settings from □3, 0, 3, 6, 9, 12, 15, 18, 21, 24 and 30 dB
Super gain:	30 or 36 dB, selectable
Shutter speeds:	1/100, 1/120, 1/250, 1/500, 1/1000, 1/2000 sec. Synchro scan mode; 1/60.8 sec. to 1/250 sec.
Lens mount:	2/3□ Bayonet type
Sensitivity:	F13 (2000 lux, 89.9% reflection)
Minimum subject brightness:	Approx. 0.36 lux (at F1.4, □36 dB)
Image S/N ratio:	63 dB (typ)
Horizontal resolution:	750 lines (center, typ)
Vertical resolution:	400 lines/450 lines (SUPER V mode)
Sampling frequency:	18 MHz
Registration error:	Below 0.05% (entire range) (excluding lens distortion)

Viewfinder (AJ-VF10P, optional accessory)

CRT:	1.5□ monochrome
Horizontal resolution:	600 lines (center)
External controls/switches	Controls; BRIGHT, CONTRAST, PEAKING Switches; TALLY, ZEBRA

VTR Section

VTR Video System (during playback on a standard playback unit)

Bands:	Y; 30 Hz to 5.75 MHz □1.0 dB/□3.0 dB P_B, P_R; 30 Hz to 2.75 MHz □1.0 dB/□3.0 dB
S/N ratio:	Better than 55 dB
K factor (2T pulse):	Within 2%
Y/C delay:	Within 30ns

VTR Audio System (during playback on a standard playback unit)

Sampling frequency:	48 kHz (synchronized to video)
Quantization:	16 bits
Frequency response:	20 Hz to 20 kHz□1.0 dB (at reference level with OFF setting for MIC LOWCUT on setting menu)
Dynamic range:	85 dB or more (at 1 kHz, AWTD)
Distortion:	Within 0.1% (at 1 kHz, reference level)
Cross talk:	Less than □70 dB (1 kHz, between 2 channels)
Wow & flutter:	Below measurable limit
Head room:	20 dB
Emphasis:	T1□50 □s, T2□15 □s (can be turned ON/OFF)

VTR Tape Travel System

Tape used:	DVCPRO format 1/4-inch M cassette tape
Tape speed:	67.640 mm/sec (at 50 Mbps) 33.820 mm/sec (at 25 Mbps)
Recording/playback time:	Approx. 33 min. (at 50 Mbps, using AJ-P66MP) Approx. 66 min. (at 25 Mbps, using AJ-P66MP)
FF/REW time:	Approx. 3 min. (using AJ-P66MP)

Connectors

Input

AUDIO IN CH1/CH2 (XLR x2, 3 pins, female):	MIC/LINE switchable, balanced, 10 kilohms MIC; Menu setting to □60, □50, □40 dBu Phantom □48 V, ON/OFF switchable LINE; Menu setting to □6, 0, □4 dBu
MIC IN (XLR, 3 pins, female):	Phantom □48 V, balanced, 3 kilohms, Menu setting to □60, □50, □40 dBu
GENLOCK IN/ (VIDEO IN) (BNC):	1.0 Vp-p, 75 ohms (signals can be monitored on EVF and recorded by menu selection)
TIME CODE IN (BNC):	0.5 V to 8 Vp-p, high impedance

Output

CAMERA OUT (BNC):	1.0 Vp-p, 75 ohms
VIDEO OUT (BNC):	1.0 Vp-p, 75 ohms
AUDIO OUT (XLR, 3 pins, male):	□4 dBu, balanced, low impedance CH1, CH2 or MIX selectable
TIME CODE OUT (BNC):	1.5 Vp-p, low impedance
PHONES (stereo mini jack)	

Other

DC IN (XLR, 4 pins, male):	DC 12 V
DC OUT (4 pins, female):	DC 11 V to 17 V, maximum rated current; 0.1 A
LENS (12 pins)	
ECU (6 pins)	

Accessories

Shoulder strap (□1), battery connector (including screws) for supporting Sony battery, AUDIO LEVEL CH1 control knob (including screw) (□1), Holder for an Anton Bauer battery (already mounted on main unit)

Related Components

Power supply related
BP-90 type battery pack
AU-M402H battery case
AJ-B75 AC adaptor

Viewfinder
AJ-VF10P, AJ-VF15P 1.5-inch viewfinders
AJ-VF20WP 2.0-inch viewfinder
AJ-VF53P 5-inch viewfinder

External VTR-related
Portable video cassette recorders
VTR adaptor (for connecting portable VTR)
AJ-YA900P 26-pin/12-pin output connector
AJ-EC3 extension control unit

Connecting cables
For connecting external VTR to 26-pin interface
For connecting external VTR to 14-pin/26-pin interface
SHAN-C12TCA multi-connector cable

Audio components
AJ-MC700P microphone kit
Stereo microphone
AJ-MH700P microphone holder
WX-RA700 wireless microphone receiver
WX-R980 camera attachment

Maintenance products
AJ-CL12MP cleaning tape
AJ-SC900 soft carrying case
AJ-HT900 carrying case
SHAN-RC700 rain cover

Other
AJ-YAP900 Picture Link adaptor board

Weight and dimensions shown are approximate.
Specifications are subject to change without notice.

Panasonic

PANASONIC BROADCAST & TELEVISION SYSTEMS COMPANY
DIVISION OF MATSUSHITA ELECTRIC CORPORATION OF AMERICA

Executive Office:
3330 Cahuenga Blvd W., Los Angeles, CA 90068 (323) 436-3500
EASTERN ZONE:
One Panasonic Way 4E-7, Secaucus, NJ 07094 (201) 348-7621
Southeast Region:
1225 Northbrook Parkway, Ste 1-160, Suwanee, GA 30024 (770) 338-6835
Central Region:
1707 N Randall Road E1-C-1, Elgin, IL 60123 (847) 468-5200
WESTERN ZONE:
3330 Cahuenga Blvd W., Los Angeles, CA 90068 (323) 436-3500

Government Marketing Department:
52 West Gude Drive, Rockville, MD 20850 (301) 738-3840

Broadcast PARTS INFORMATION & ORDERING:
9:00 a.m.–5:00 p.m. (EST) (800) 334-4881/24 Hr. Fax (800) 334-4880
Emergency after hour parts orders (800) 334-4881

TECHNICAL SUPPORT:
Emergency 24 Hour Service (800) 222-0741

Panasonic Canada Inc.
5770 Ambler Drive, Mississauga, Ontario L4W 2T3 (905) 624-5010

Panasonic de Mexico S.A. de C.V.
Av angel Urraza Num. 1209 Col. de Valle 03100 Mexico, D.F. (52) 1 951 2127

Panasonic Sales Company
Division of Matsushita Electric of Puerto Rico Inc.
San Gabriel Industrial Park, 65th Infantry Ave., Km. 9.5, Carolina, Puerto Rico 00630 (787) 750-4300