e-Front runners

FUJI SERVO SYSTEM

FALDIC ALPHA5

SIMPLE & SMART

MEH555c

ALPHA5

Line of products of ALPHA5 Series

Servo Amplifier

Model		Command interface				Control mode				Power supply	Capacity	Type	Applicable motor series
		Pulse/ analog	Di/Do	Modbus -RTU	SX bus	Positioning	Position	Speed	Torque				
 General-purpose interface	VV type	●	●	●		●	●	●	●	Single-phase or 3-phase 200 to 240 VAC	0.05 to 0.75kW	RYT***□5-VV2	GYS GYC GYG
										3-phase 200 to 240 VAC	0.85 to 5.0kW		
										Single-phase 100 to 120 VAC	0.05 to 0.375kW	RYT***□5-VV6	GYS
 High speed serial bus (SX bus)	VS type				●		●	●	●	Single-phase or 3-phase 200 to 240 VAC	0.05 to 0.75kW	RYT***□5-VS2 RYT***□5-LS2	GYS GYC GYG
										3-phase 200 to 240 VAC	0.85 to 5.0kW		
	LS type				●	●	●	●		Single-phase 100 to 120 VAC	0.05 to 0.375kW	RYT***□5-VS6 RYT***□5-LS6	GYS

CONTENTS

Next generation servo system for ever-evolving machines

Servomotor

Model	Rated speed (max. speed)	Power supply	Rated output capacity	Servomotor type		Protective constructon	Encoder	Type
				Without brake	With brake			
 **GYS motor** Ultra-low inertia	3000r/min (0.75kW or less: 6000r/min 1.0kW or more: 5000r/min)	200V series	11 types 0.05 to 5.0kW	●	●	IP67 *1	18-bit ABS/INC	GYS***D5-HB2(-B) *2
							20-bit INC	GYS***D5-RB2(-B) *2
		100V series	4 types 0.05 to 0.375kW	●	●	IP67 *1	18-bit ABS/INC 20-bit INC	GYS***D5-HB6(-B) *2 GYS***D5-RB6(-B) *2
 **GYC motor** Low inertia	3000r/min (0.75kW or less: 6000r/min 1.0kW or more: 5000r/min)	200V series	7 types 0.1 to 2.0kW	●	●	IP67 *1	18-bit ABS/INC	GYC***D5-HB2(-B) *2
							20-bit INC	GYC***D5-RB2(-B) *2
 **GYG motor** Middle inertia	2000r/min (3000r/min)	200V series	5 types 0.5 to 2.0kW	●	●	IP67 *1	18-bit ABS/INC	GYG***C5-HB2(-B) *2
							20-bit INC	GYG***C5-RB2(-B) *2
 **GYG motor** Middle inertia	1500r/min (3000r/min)	200V series	3 types 0.5, 0.85, 1.3kW	●	●	IP67 *1	18-bit ABS/INC	GYG***B5-HB2(-B) *2
							20-bit INC	GYG***B5-RB2(-B) *2

*1: Except for shaft-through part (and connectors for GYS and GYC motors of 0.75kW or less).
*2: Models with a brake has "-B" at the end.

Compatibility with general-purpose communication: VV type

Simple! PTP positioning

Positioning function is embedded as standard in general purpose interface unit "ALPHA5 VV".

As the ALPHA5 VV type is the standard model, external positioning unit or dedicated items for positioning are not required.

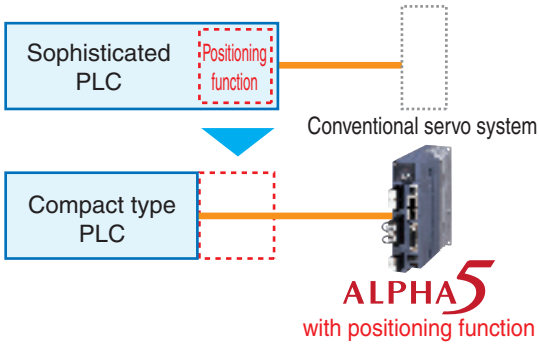

3 in 1 !

Following operations are enabled by one unit:
- Positioning via Modbus-RTU communications (immidiate value data)
- Positioning via Di/Do signal (positioning data 15 points*)
- Controlling positions, speeds and torques via pulse/analog input

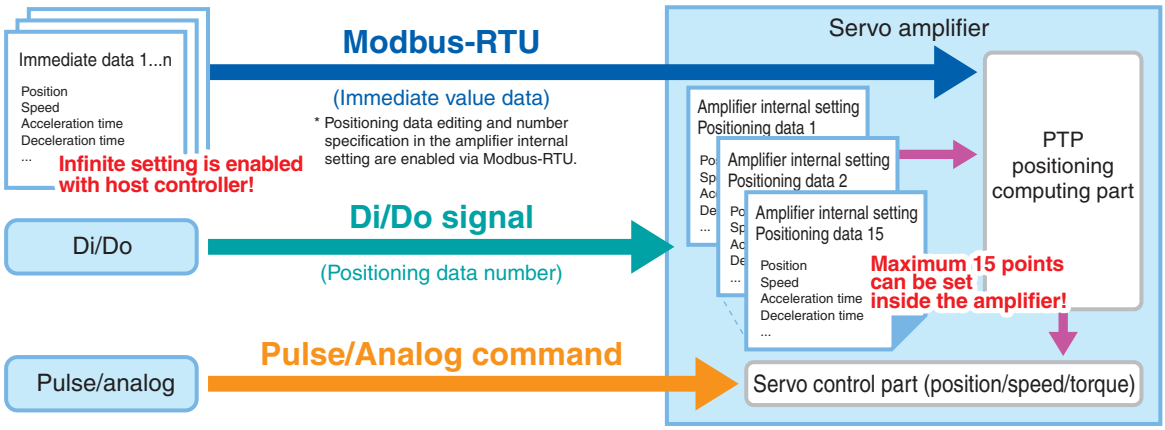

Simple connection! Modbus-RTU communications

Operations such as PTP positioning operation, parameter edit, and various monitoring are enabled. All you need to do is connect HMI (POD), general-purpose PLC, or PC controller directly to servo amplifier via Modbus-RTU communications.

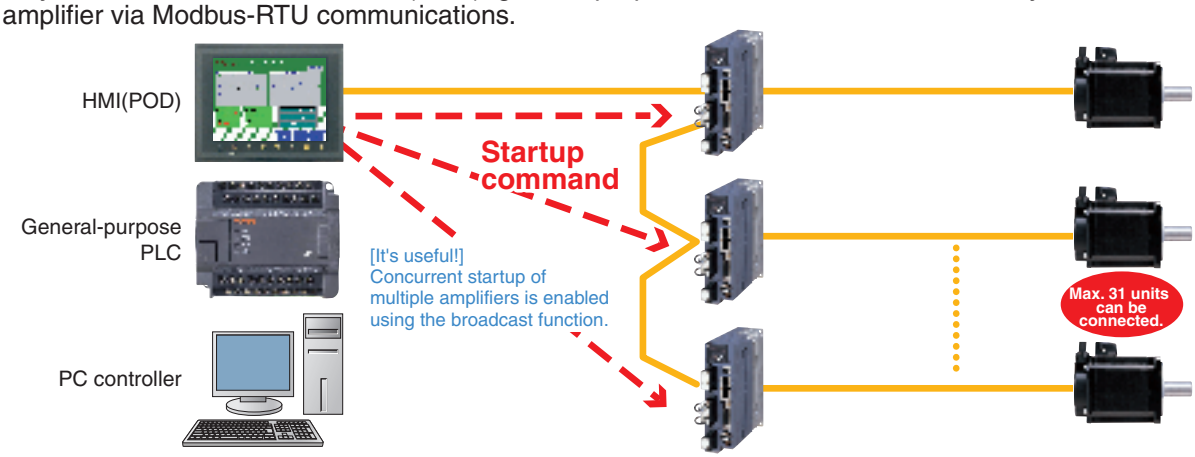

Other makers' products compatible with Modbus-RTU

Any HMI (POD), general-purpose PLC, or PC controller compatible with Modbus-RTU can be connected to servo amplifier easily regardless of maker.

Compatibility with SX bus: VS type and LS type

Sophisticated motion control system that has synchronizationand interpolation controls can be configured easily.

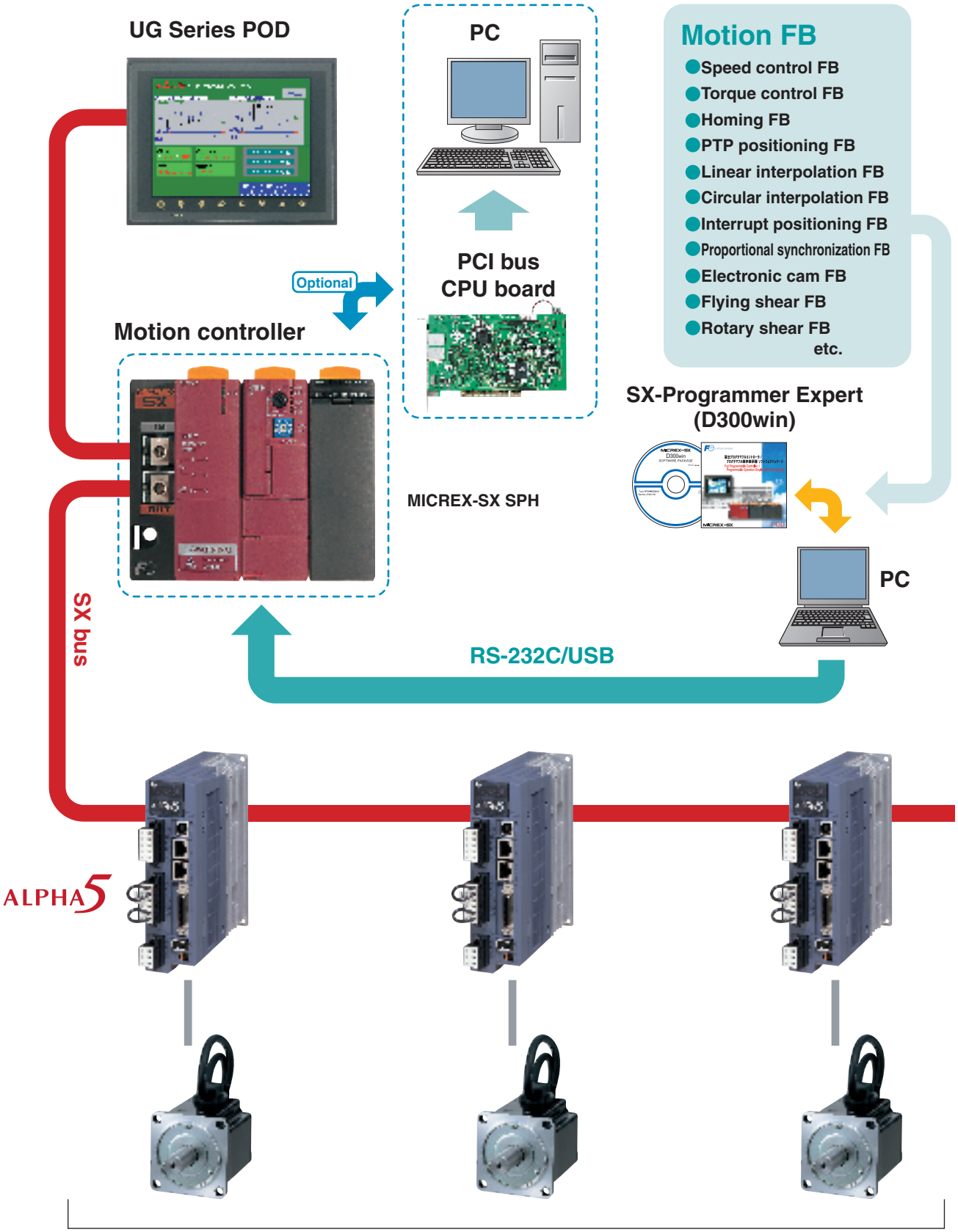

Total extension 25m (maximum), 32 connection units (maximum)

Fast and accurate positioning is realized.

New high speed servo control engine
Frequency response 1500Hz

Increased motor rotation speed
Max. rotation speed 6000r/min

Fine resolution encoder
18-bit absolute/incremental 262,144 pulses
20-bit incremental 1,048,576 pulses

High performance frequency response (1500Hz), high rotation speed (6000r/min) and high resolution encoder reduce the cycle time and make faster and more accurate positioning and settling possible.

■Cycle time reduction 1.2s▸1s

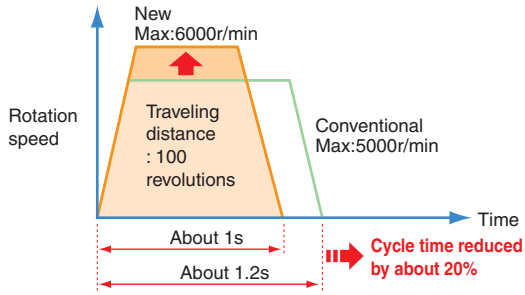

■Time necessary to settling to 1μm accuracy 4ms

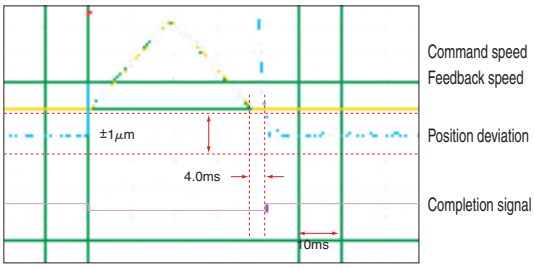

1/10000 rotation accuracy with a 10mm ball screw = 1μm

New control functions

New notch filter (auto notch filter)

The notch filter is set automatically upon detection of mechanical resonance.
Because detection and calculation are always conducted while the auto notch filter remains turned on, resonance frequencies changing by time are effectively filtered.

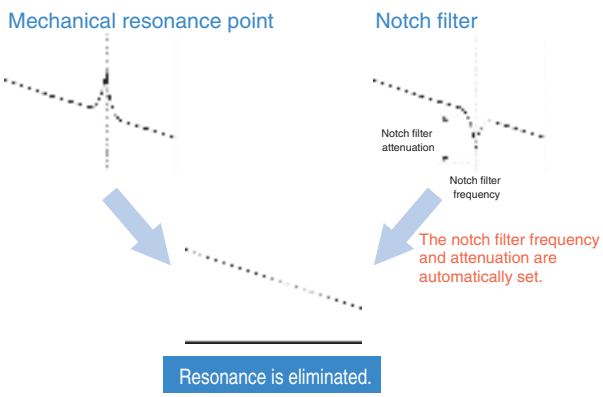

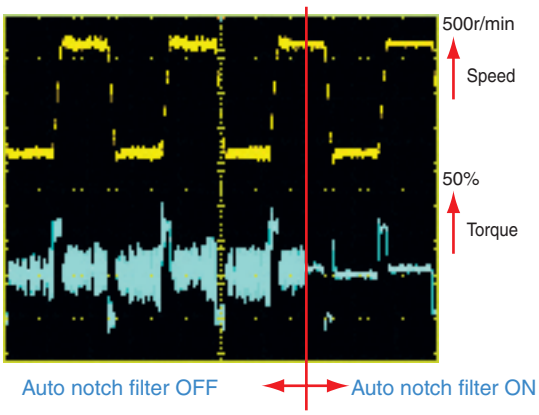

Homing by hit-to-stop

Wire saving can be achieved with elimination of the limit switch and over travel signal. Moreover, several homing functions allows homing program creation to be simplified only by combining the servo parameters. Creating complicated program of homing in the host controller is no more necessary.

Motor stop method setting is enabled

- Alarm occurrence
- Main power supply is OFF.
- Servo ON signal is OFF.

Selection among rapid deceleration stop, DB stop, and coast-to-stop is enabled under the above conditions. Since limiting output torque at desired value is possible even if rapid deceleration stops is selected, impact shock to the machine can be reduced.

* However, it is enabled when the control power supply is input.

Reduced space

Size reduction of servomotor and servo amplifier

- Servo amplifier

The installation area is reduced by 25 to 30% when compared with our conventional model.

- Servomotor

The overall length is reduced by about 15% when compared with our conventional model.

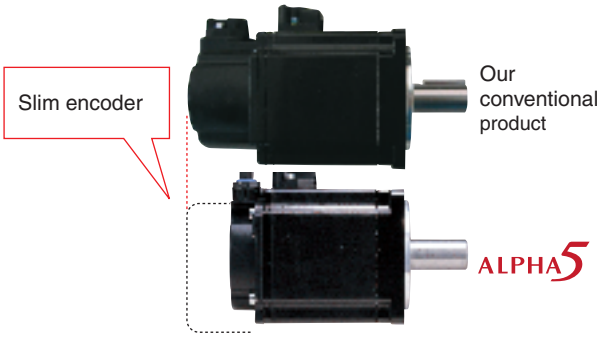

(Comparison with 0.2kW GYS motor)

Long life design

The designed service lives of various parts of the servo amplifier are extended.

Electrolytic capacitor: 10 years
Cooling fan: 10 years

* Operating conditions
  - Ambient temperature: Average 30°C/year
  - Load factor: Within 80%
  - Operation ratio: Within 20 hours/day

Compliance with various standards

Compliance with CE marking and UL/cUL

The standard model complies with CE marking and UL/cUL.

Compliance with RoHS directive

The standard model complies with EU's specific hazardous material limitation (RoHS) directive. The servo system is environmentally friendly because use of six hazardous materials is limited.

<Six hazardous materials>
Lead, mercury, cadmium, hexavalent chromium, polybrominated biphenyl (PBB), polybrominated diphenylether (PBDE)

Close installation

The servo amplifier can be installed side by side without a clearance. The installation space in the control panel of the machine is reduced.

* 80% ED rating in case of close installation
  There is no limitation if 5mm or a larger clearance is placed.

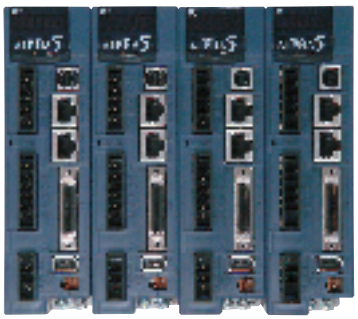

Close installation can be made even if the ABS backup battery is installed.
The battery can be replaced without difficulty while the servo amplifier is left installed.

The designed life time of the battery is about 35000 hours. (Retention time with power turned off)

Environmental resistance

IP67 (servomotor)

The standard servomotor model is compatible with IP67* and it can be used in the environment susceptible to water or dust splashes.

* Except for shaft-through part and connectors

Compatibility

Compatibility with FALDIC-α, -β and -W motors

Because compatibility with FALDIC-α, -β and -W Series servomotors is assured, the new amplifier meets requirements for replacement of existing products flexibly. (Compatibility with individual products is planned.)

Improved usability: PC Loader

USB connection

The amplifier can be connected to PC using a commercially available USB cable (B-type).

Simple setup

- Easy tuning and profile operation

Because the servo can be adjusted for the machine even if the controller program is not completed, the machine setup time is substantially reduced.

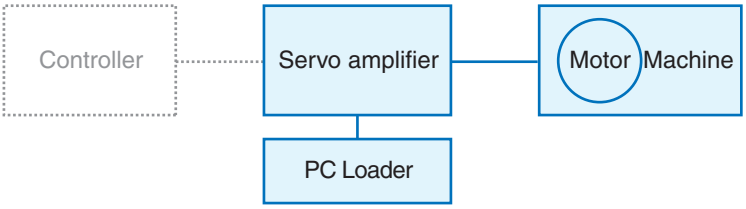

Easy tuning data entry screen

Up to 25 reciprocal motions of the servomotor are conducted while the gain is automatically adjusted.

- Sequence test mode

The controller program can run even if the machine is not completed. The efficiency of program debugging is improved.

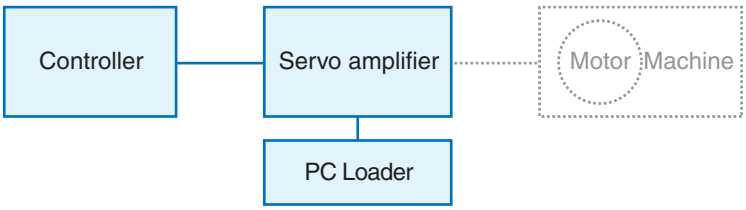

Sequence test mode data entry screen

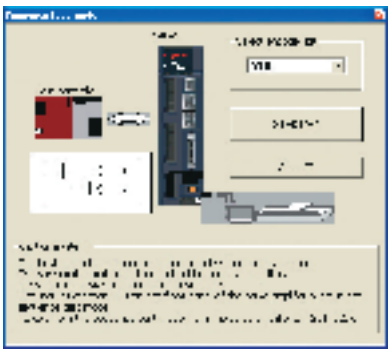

The sequence of the host controller can be tested even if the servomotor is not connected.

Enriched maintenance functions

- Functions associated with alarm

When an alarm occurs, data such as the speed and torque at alarm occurrence is displayed as well as the description of the alarm. Accurate analyses into the cause of the alarm are possible.

Description of the alarm and various cumulative operation times are displayed.

Alarm history monitor screen

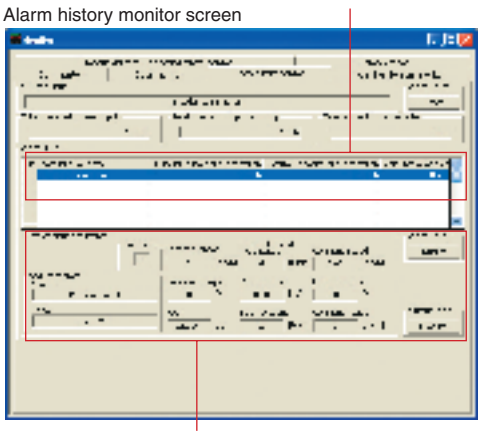

Each piece of data at alarm occurrence is displayed.

- Life warning function

The life of consumable parts of the servo amplifier is calculated.

- Battery life warning
- Main circuit capacity life warning
- Cooling fan life warning

Warning monitor screen

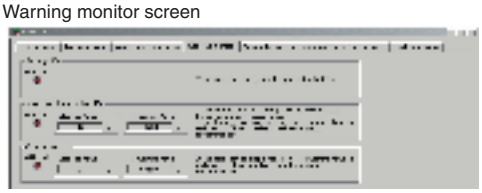

The warning can be issued in a sequence output signal or displayed on the keypad.

Explanation of Model Codes

Servo amplifier

RYT 500 D 5 – V S 2

Code	[Basic type]
RYT	ALPHA5 series

Code	[Applicable motor output]
500	50×10^{0}=0.05kW
101	10×10^{1}=0.1kW
201	20×10^{1}=0.2kW
401	40×10^{1}=0.4kW, 0.375kW
501	50×10^{1}=0.5kW
751	75×10^{1}=0.75kW
851	85×10^{1}=0.85kW
102	10×10^{2}=1.0kW
132	13×10^{2}=1.3kW
152	15×10^{2}=1.5kW
202	20×10^{2}=2.0kW
302	30×10^{2}=3.0kW
402	40×10^{2}=4.0kW
502	50×10^{2}=5.0kW

Code	[Series]
D	3000r/min series
C	2000r/min series
B	1500r/min series

Code	[Order of development]
5	5

Code	[Input voltage]
2	3-phase 200 VAC
6	Single-phase 100 VAC

Code	[Upper interface]
S	SX bus
V	General-purpose interface (pulse, analog voltage)

Code	[Major functions]
V	Position, speed and torque control
L	Built-in positioning function

Servomotor

GYS 500 D 5 – H B 2 – B

Code	[Basic type]
GYS	Slim type (Ultra-low inertia)
GYC	Cubic type (Low inertia)
GYG	Middle inertia type

Code	[Rated output]
500	50×10^{0}=0.05kW
101	10×10^{1}=0.1kW
201	20×10^{1}=0.2kW
401	40×10^{1}=0.4kW, 0.375kW
501	50×10^{1}=0.5kW
751	75×10^{1}=0.75kW
851	85×10^{1}=0.85kW
102	10×10^{2}=1.0kW
132	13×10^{2}=1.3kW
152	15×10^{2}=1.5kW
202	20×10^{2}=2.0kW
302	30×10^{2}=3.0kW
402	40×10^{2}=4.0kW
502	50×10^{2}=5.0kW

Code	[Rated speed]
D	3000r/min series
C	2000r/min series
B	1500r/min series

Code	[Order of development]
5	5

Code	[Brake]
Blank	Not provided
B	Provided

Code	[Input voltage]
2	3-phase 200 VAC
6	Single-phase 100 VAC

Code	[Oil seal/shaft]	Applicable motor GYS, GYC, GYG
A	Without an oil seal, straight shaft with a key	△ (*○)
B	Without an oil seal, straight shaft without a key	◎
C	Without an oil seal, straight shaft with a key, tapped	○
E	With an oil seal, straight shaft with a key	△
F	With an oil seal, straight shaft without a key	△
G	With an oil seal, straight shaft with a key, tapped	△

◎: Standard item ○: Semi-standard item
△: Made-to-order item
* Applicable with GYS and GYC motors of 0.1kW or less

Code	[Encoder]
H	18-bit ABS/INC
R	20-bit INC

Specifications of Servo Amplifier

Common specifications

Applicable motor rated speed			3000r/min				3000r/min										2000r/min					1500r/min		
Applicable motor output [kW]			0.05	0.1	0.2	0.375	0.05	0.1	0.2	0.4	0.75	1.0	1.5	2.0	3.0	4.0	5.0	0.5	0.75	1.0	1.5	2.0	0.5	0.85	1.3
Amplifier type RYT□□□	D5-△△○		500	101	201	401	500	101	201	401	751	102	152	202	302	402	502								
	C5-△△2																	501	751	102	152	202			
	B5-△△2																						501	851	132
Outer frame number			Frame 1		Frame 2	Frame 3	Frame 1			Frame 2	Frame 3	Frame 4		Frame 5		Frame 6		Frame 3		Frame 4	Frame 5		Frame 3	Frame 4	Frame 5
Mass [kg]			0.9		1.1	1.3	0.9			1.1	1.3	1.5		2.6		3.8		1.3		1.5	2.9		1.3	1.5	2.9
Protective construction / cooling			Open / self-cooling			Open / forced air cooling	Open / self-cooling				Open / forced air cooling							Open / forced air cooling					Open / forced air cooling		
Power supply	Main power supply	Phase	Single-phase				Single-phase, 3-phase					3-phase						Single-phase, 3-phase		3-phase			Single-phase, 3-phase	3-phase	
		Voltage frequency	AC100 to 120V 50/60Hz				AC200 to 240V 50/60Hz																		
		Allowable voltage fluctuation	AC85 to 132V				3-phase: AC170 to 262V, Single-phase: AC190 to 262V																		
	Control power supply	Phase	Single-phase																						
		Voltage frequency	AC100 to 120V 50/60Hz				AC200 to 240V 50/60Hz																		
		Allowable voltage fluctuation	AC85 to 132V				AC170 to 262V																		
Control system			IGBT PWM sinusoidal PWM drive																						
Max voltage for regenerative resistance [W]	Built-in resistor		-	-	8	20	-	-	-	8	20	20	20	30	30	60	60	20	20	20	30	30	20	20	30
	External resistor *1		17	17	25	25	17	17	17	17	50	50	50	260	260	300	300	50	50	50	260	260	50	50	260
Dynamic brake			Built-in *2																						
Feedback			18-bit serial encoder (absolute/incremental), 20-bit serial encoder (incremental)																						
Overload capability			300% / 3 sec.																						
Speed fluctuation ratio	Load fluctuation		Within ±1 r/min (load fluctuation 0 to 100%)																						
	Power supply fluctuation		Within ±1 r/min (power supply fluctuation -10 to +10%)																						
	Temperature fluctuation		Within ±0.2% (25 ±10°C at rated operation speed and analog input operation)																						
Capability and function	VV type	Speed control function	Closed loop control with speed adjuster, acceleration/deceleration time setting, manual feed rate/max. rotation speed, speed command zero clamp, etc.																						
		Number of position data sets	15-point (position, speed, acceleration/deceleration time setting, timer, M code and various statuses)																						
		Positon control function	Closed loop control with position adjuster, electronic gear, output pulse setting, feed forward, homing, interrupt positioning, auto startup, etc.																						
		Torque control function	Closed loop control with current adjuster (proportional open loop control of current and torque), torque limit, speed limit at torque control, etc.																						
		Accessory functions	Easy tuning, profile operation, sequence test mode, auto tuning, auto notch filter, vibration suppressing online learning, etc.																						
	VS type	Speed control function	Closed loop control with speed adjuster, acceleration/deceleration time setting, manual feed rate/max. rotation speed, etc.																						
		Positon control function	Closed loop control with position adjuster, electronic gear, output pulse setting, feed forward, homing, interrupt positioning, etc.																						
		Torque control function	Closed loop control with current adjuster (proportional open loop control of current and torque), torque limit, speed limit at torque control, etc.																						
		Accessory functions	Easy tuning, profile operation, sequence test mode, auto tuning, auto notch filter, vibration suppressing online learning, etc.																						
	LS type	Positon control function	Automatic startup, manual operation, pulse train, homing																						
		Number of position data sets	99-point (position, speed, timer, M code and various statuses)																						
		Max positioning value	±2,000,000,000																						
		Positioning method	Absolute / incremental																						
		Accessory functions	Easy tuning, profile operation, sequence test mode, auto tuning, auto notch filter, vibration suppressing online learning, etc.																						
Protective function (Alarm indication)			Overcurrent(oc1, oc2), Overspeed(oS), Control power undervoltage(Lvc), Overvoltage(Hv), Encoder trouble(Et1, Et2), Circuit trouble(ct), Memory Error(dE), Fuse Broken(Fb), Motor Combination Error(cE), Braking transistor overheat(tH), Encoder Communication error(Ec), CONT(Control signal) Error(ctE), Overload(oL1, oL2), Main power undervoltage(LvP), Braking resistor overheat(rH1, rH2, rH3), Deviation overflow(oF), Amplifier overheat(AH), Encoder overheat(EH), Absolute data Lost(dL1, dL2, dL3), Multi-turn data over flow(AF), Initial Error(iE), Command pulse Frequency Error(HF)																						
Operation and display section of main body (keypad)			6-digit alphanumeric display with 7-segment LED 4 operation switches Analog monitor connector (CN6), status indication LED																						
Working conditions	Installation place		Indoors (free from direct sunshine), altitude ≤ 1000m, free from corrosive and flammable gases, oil mist and dust In case of compliance with CE marking Models compliant with EU directive: pollution degree 2, over voltage category III																						
	Temperature/humidity		-10 to 55°C/10 to 90%RH (without condensation)																						
	Vibration / shock resistance		4.9m/s²/19.6m/s²																						
Standards			UL/cUL (UL508c), CE marking (low voltage directive EN61800-5-1) (acquisition being applied for model of 2.0kW or more), RoHS directive																						

*1: The figure is data determined when the amplifier is connected with an external resistor dedicated for each model.
*2: We will accept custom orders for models without dynamic brake.

Specifications of Servo Amplifier

VV Type

Outline of system configuration

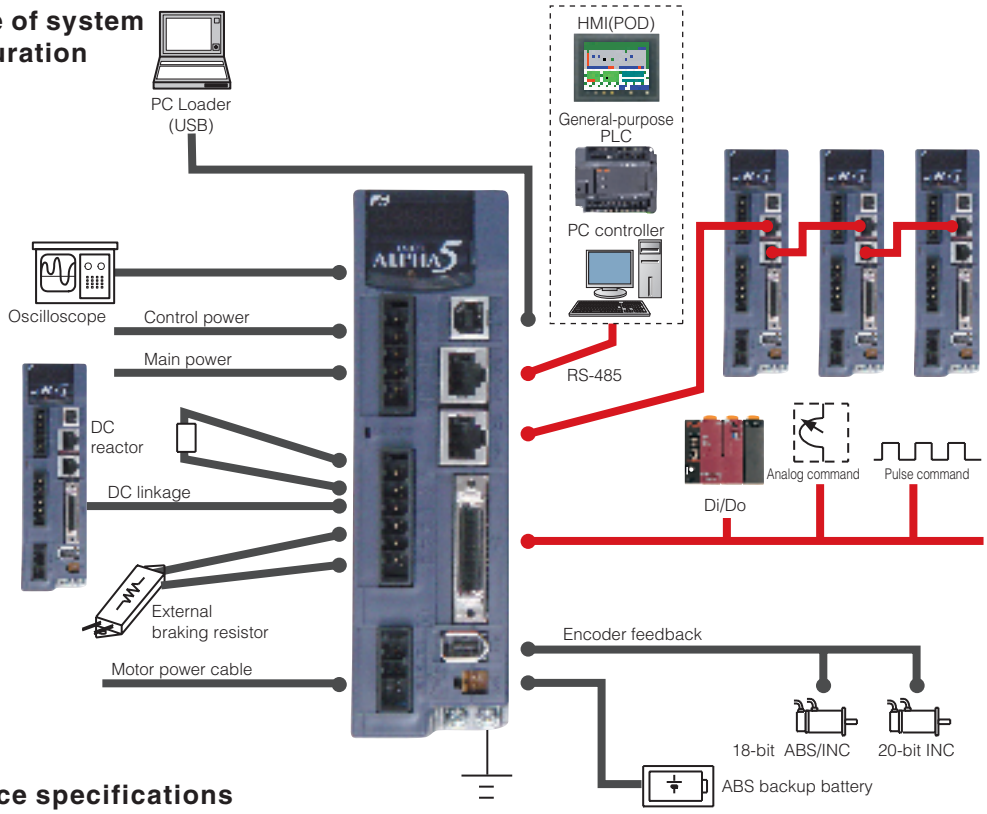

Interface specifications

Item		Specifications
Command interface	Positioning function	RS-485 (Modbus-RTU), Di/Do
	Position control	Pulse input
	Speed control	Analog voltage input
	Torque control	Analog voltage input
Communication interface		Two RS-485 ports (for parameter editing and monitor)
		Our original protocol Modbus-RTU
		9600/19200/38400 bps, connection of max. 31 axes

Terminal name	Symbol	Specifications
Pulse input	CA,*CA CB,*CB	Pulse input under position control Differential input: max. input frequency ≤ 1.0MHz Open collector input: max. input frequency ≤ 200kHz (in case of signals at 90-degree phase difference, the above relationship is true for the four-fold frequency.) Pulse format: Command pulse/Command direction; Forward/Reverse pulse; Two signals at 90-degree phase difference — Select one of these formats with a parameter setting.
	PPI	Pull-up power input at open collector input (24VDC ±10%)
Pulse output	FFA,*FFA FFB,*FFB	Differential output: max. output frequency ≤ 1MHz Two signals at 90-degree phase difference Pulse output count setting n pulses/rev): 16 ≤ n ≤ 262144
	FFZ,*FFZ	Differential output: 1 pulse/rev
	FZ	Open collector output: 1 pulse/rev
	M5	Reference potential (0V)
Analog monitor voltage output	MON1 MON2	0V to ±10VDC Resolution: 14bits / ±full scale The output data depends on internal parameter.
	M5	Reference potential (0V)
Common for sequence I/O	COMIN	Common for sequence input signal
	COMOUT	Common for sequence output signal
Sequence input signal	CONT1 to CONT8	ON upon short circuit across contacts, OFF upon open circuit 12VDC-10% to 24VDC+10% Current consumption 20mA (per contact; used at 24VDC circuit voltage) Function of each signal depends on parameter setting Compatible with both sink and source input methods
Sequence output signal	OUT1 to OUT5	Short circuit upon ON, open circuit upon OFF 30VDC / 50mA (max.) Function of each signal depends on parameter setting Compatible with both sink and source output methods
Analog voltage input	VREF	Speed command input for speed control Input range: from -10 to 0 to -10V, input impedance 20kΩ Resolution: 15 bits / ±full scale
	TREF	Torque command input for torque control Input range: from -10 to 0 to +10V, input impedance 20kΩ Resolution: 14 bits / ±full scale
	P10	Power supply output for analog command (+10 VDC), output capacity 30 mA
	M5	Reference potential (0V)

Specifications of Servo Amplifier

VS Type

■ Outline of system configuration

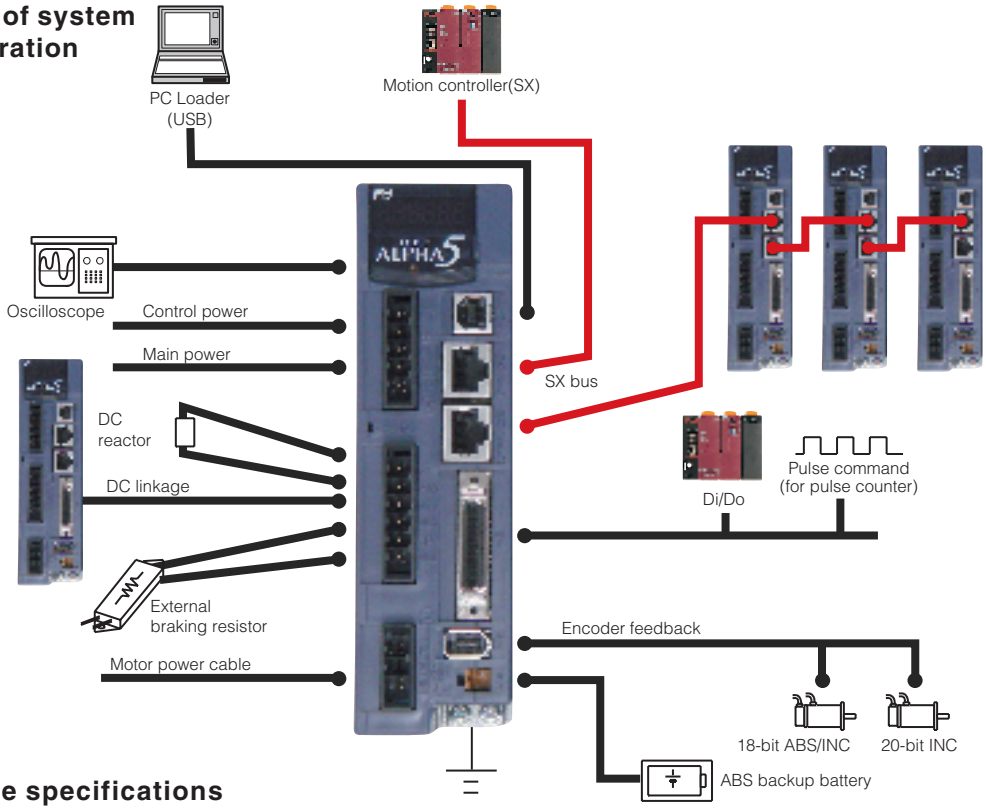

■ Interface specifications

Item		Specifications
Command interface	Position control	SX bus: IQ area
	Speed control	SX bus: IQ area
	Torque control	SX bus: IQ area
Communication interface		SX bus (for command interface, parameter editing and monitor)
		Our original protocol
		25Mbps, connection of max. 32 axes

Terminal name	Symbol	Specifications
Pulse input	CA,*CA CB,*CB	Pulse input during operation with high speed counter function Differential input: max. input frequency ≤ 1.0MHz Open collector input: max. input frequency ≤ 200kHz (In case of signals at 90-degree phase difference, the above relationship is true for the four-fold frequency.) Pulse format: Command pulse/Command direction; Forward/Reverse pulse; Two signals at 90-degree phase difference — Select one of these formats with a parameter setting.
	PPI	Pull-up power input at open collector input (24VDC ± 10%)
Pulse output	FFA,*FFA FFB,*FFB	Differential output: max. output frequency ≤ 1MHz Two signals at 90-degree phase difference Pulse output count setting (n pulses/rev): 16 ≤ n ≤ 262144
	FFZ,*FFZ	Differential output 1 pulse/rev
	FZ	Open collector output 1 pulse/rev
	M5	Reference potential (0V)
Analog monitor voltage output	MON1 MON2	0V to ± 10VDC Resolution: 14 bits / ±full scale The output data depends on the internal parameter.
	M5	Reference potential (0V)
Common for sequence I/O	COMIN	Common for sequence input signal
	COMOUT	Common for sequence output signal
Sequence input signal	CONT1 to CONT5	ON upon short circuit across contacts, OFF upon open circuit 12VDC-10% to 24VDC +10% Current consumption 20mA (per contact; use at circuit voltage 24 VDC) Function of each signal depends on parameter setting Compatible with both sink and source input methods
Sequence output signal	OUT1 to OUT2	Short circuit upon ON, open circuit upon OFF 30VDC / 50mA (max.) Function of each signal depends on parameter setting Compatible with both sink and source output methods

Specifications of Servo Amplifier

LS Type

■ Outline of system configuration

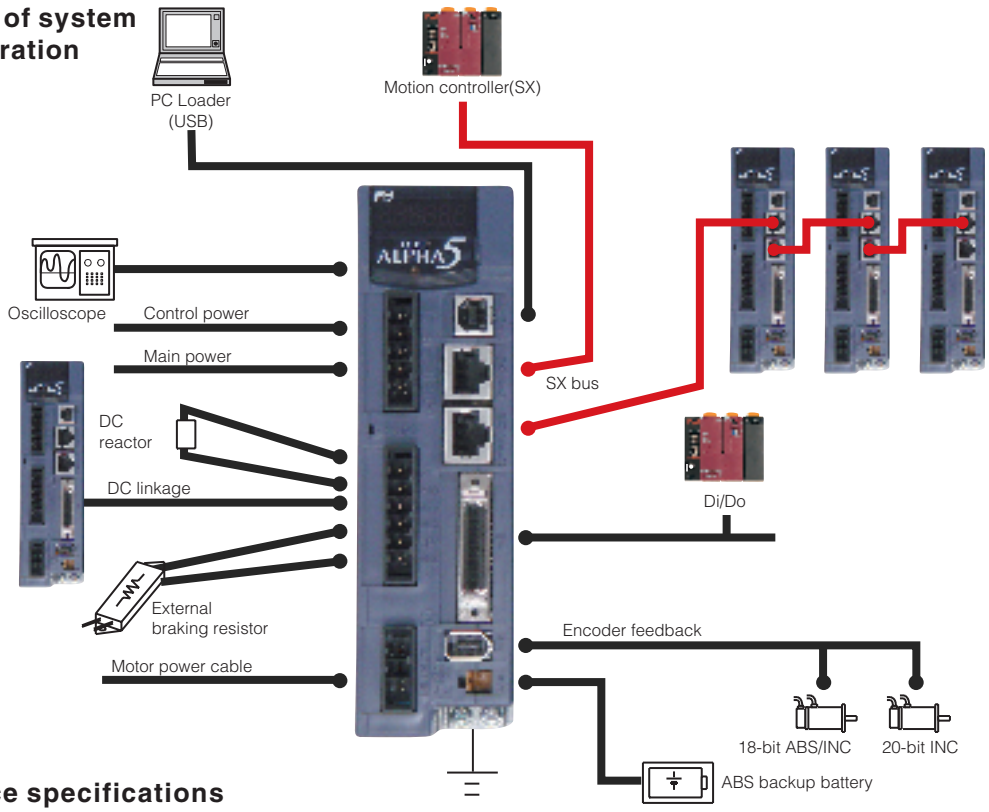

■ Interface specifications

Item		Specifications
Command interface	Positioning Function	SX bus: IQ area
	Position control	SX bus: IQ area
	Speed control	SX bus: IQ area
Communication interface		SX bus (for command interface, parameter editing and monitor)
		Our original protocol
		25Mbps, connection of max. 32 axes

Terminal name	Symbol	Specifications
Pulse input	CA,*CA CB,*CB	Pulse train command input for position control Differential input: max. input frequency ≤ 1.0MHz Open collector input: max. input frequency ≤ 200kHz (In case of signals at 90-degree phase difference, the above relationship is true for the four-fold frequency.) Pulse format: Command pulse/Command direction; Forward/Reverse pulse; Two signals at 90-degree phase difference — Select one of these formats with a parameter setting.
	PPI	Pull-up power input at open collector input (24VDC ± 10%)
Pulse output	FFA,*FFA FFB,*FFB	Differential output: max. output frequency ≤ 1MHz Two signals at 90-degree phase difference Pulse output count setting (n pulses/rev): 16 ≤ n ≤ 262144
	FFZ,*FFZ	Differential output 1 pulse/rev
	FZ	Open collector output 1 pulse/rev
	M5	Reference potential (0V)
Analog monitor voltage output	MON1 MON2	0V to ± 10VDC Resolution: 14 bits / ±full scale The output data depends on the internal parameter.
	M5	Reference potential (0V)
Common for sequence I/O	COMIN	Common for sequence input signal
	COMOUT	Common for sequence output signal
Sequence input signal	CONT1 to CONT5	ON upon short circuit across contacts, OFF upon open circuit 12VDC-10% to 24VDC +10% Current consumption 20mA (per contact; use at circuit voltage 24 VDC) Function of each signal depends on parameter setting Compatible with both sink and source input methods
Sequence output signal	OUT1 to OUT2	Short circuit upon ON, open circuit upon OFF 30VDC / 50mA (max.) Function of each signal depends on parameter setting Compatible with both sink and source output methods

Connection Diagram (Reference)

VV type

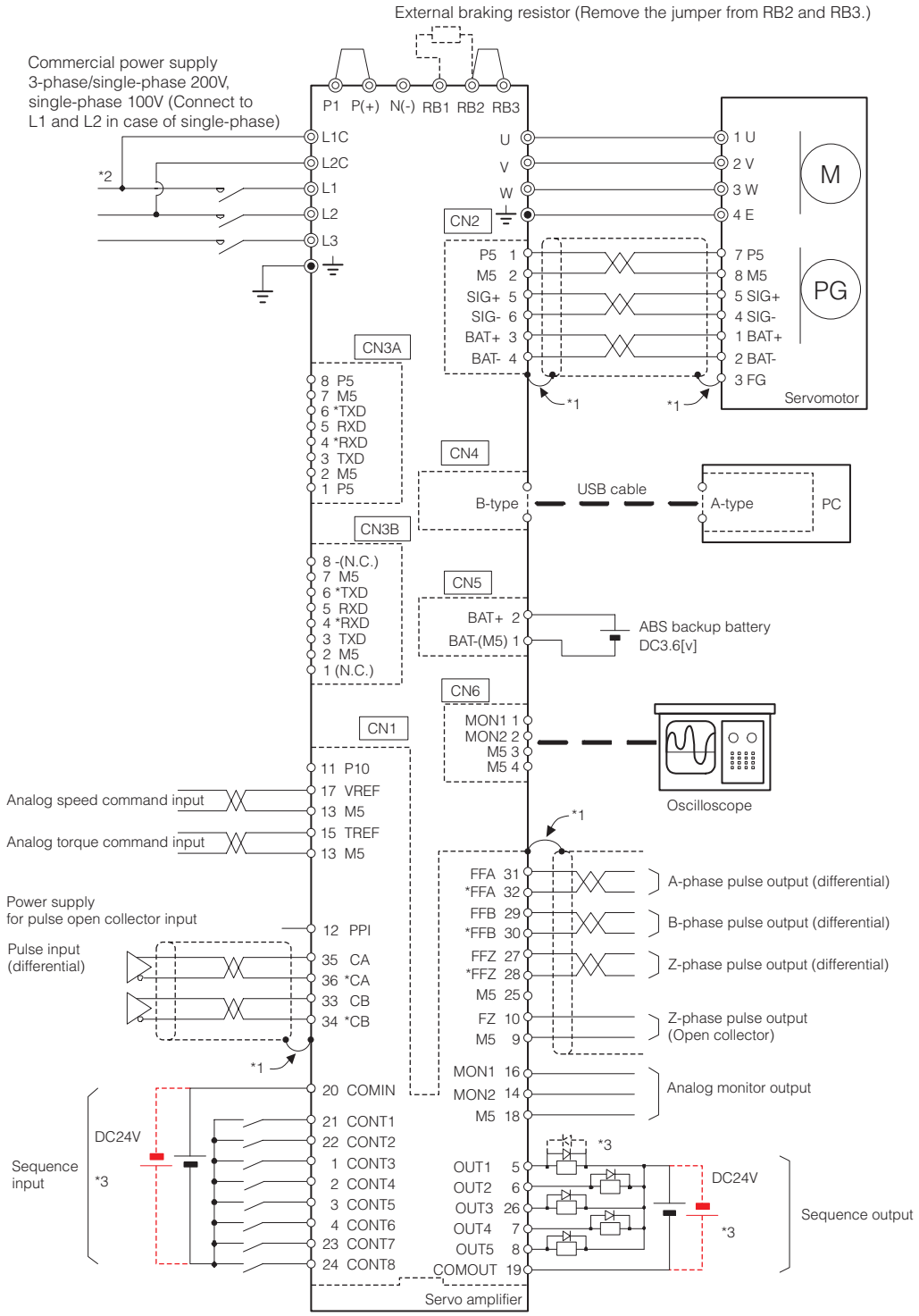

*1: Connect the shield to the connector shell of CN1 and CN2. The connector shell is at the ground potential (FG).
*2: Supply the control power (L1c and L2c) without fail. (The servo amplifier does not function with merely the main power supply.)
*3: To use in the source I/O, connect as shown with the broken line. Connect the surge absorber diode of the output load with the reverse polarity.

Caution	The diagram shown above is given as a reference for model selection. When actually using the selected servo system, make wiring connections according to the connection diagram and instructions described in the user's manual.

Connection Diagram (Reference)

VS type, LS type

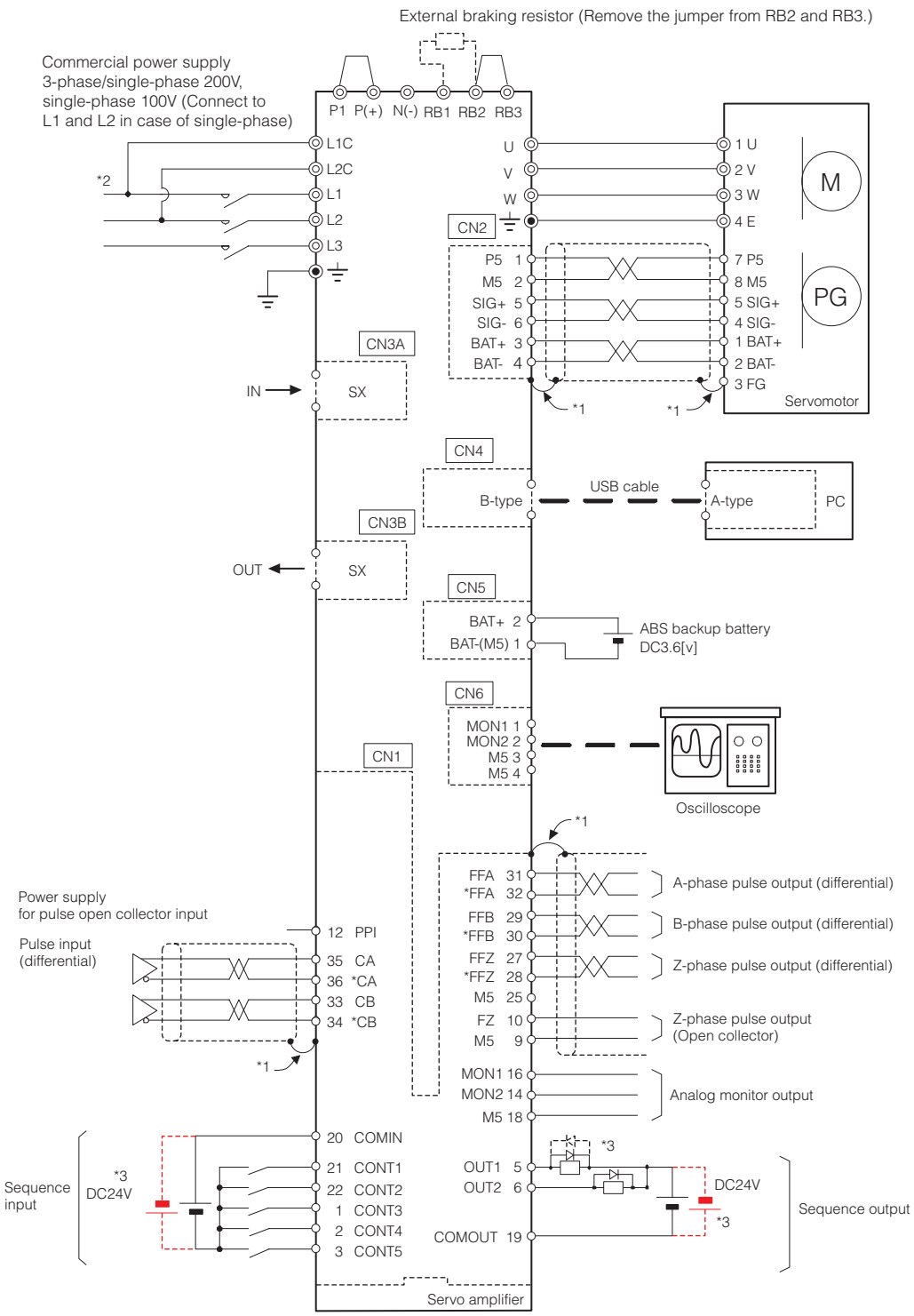

*1: Connect the shield to the connector shell of CN1 and CN2. The connector shell is at the ground potential (FG).
*2: Supply the control power (L1c and L2c) without fail. (The servo amplifier does not function with merely the main power supply.)
*3: To use in the source I/O, connect as shown with the broken line. Connect the surge absorber diode of the output load with the reverse polarity.

Caution	The diagram shown above is given as a reference for model selection. When actually using the selected servo system, make wiring connections according to the connection diagram and instructions described in the user's manual.

Specifications of Servomotor

GYS Motor

200V series

■Standard specifications

Motor type **(-B) indicates the brake-incorporated type.**	**GYS500D5 - □□ 2 (-B)**	**GYS101D5 - □□ 2 (-B)**	**GYS201D5 - □□ 2 (-B)**	**GYS401D5 - □□ 2 (-B)**	**GYS751D5 - □□ 2 (-B)**
Rated output [kW]	0.05	0.1	0.2	0.4	0.75
Rated torque [N · m]	0.159	0.318	0.637	1.27	2.39
Rated speed [r/min]	3000				
Max. speed [r/min]	6000*1				
Max. torque [N · m]	0.478	0.955	1.91	3.82	7.17
Inertia [kg · m^{2}] ( ) indicates brake-incorporated type.	0.0192×10^{-4} (0.0223×10^{-4})	0.0371×10^{-4} (0.0402×10^{-4})	0.135×10^{-4} (0.159×10^{-4})	0.246×10^{-4} (0.270×10^{-4})	0.853×10^{-4} (0.949×10^{-4})
Recommended load inertia ratio	30 times or less*2				
Rated current [A]	0.85	0.85	1.5	2.7	4.8
Max. current [A]	2.55	2.55	4.5	8.1	14.4
Winding insulation class	Class B				
Operation duty type	Continuous				
Degree of enclosure protection	Totally enclosed, self-cooled (IP 67. excluding the shaft sealing and connectors)				
Terminals (motor)	Cable 0.3m (with connector)				
Terminals (encoder)	Cable 0.3m (with connector)				
Overheat protection	Not provided (The servo amplifier detects temperature.)				
Mounting method	By securing motor flange IMB5 (L51), IMV1 (L52), IMV3 (L53)				
Shaft extension	Straight shaft				
Paint color	N1.5				
Encoder	18-bit serial encoder (absolute/incremental), 20-bit serial encoder (incremental)				
Vibration level	V5 or below				
Installation place, altitude and environment	For indoor use (free from direct sunlight), 1000m or below, locations without corrosive and flamable gases, oil mist and dust				
Ambient temperature, humidity	-10 to +40°C, within 90% RH max.(without condensation)				
Vibration resistance [m/s^{2}]	49				
Mass [kg] ( ) indicates brake-incorporated type.	0.45 (0.62)	0.55 (0.72)	1.2 (1.7)	1.8 (2.3)	3.4 (4.2)
Compliance with standards	UL/cUL (UL1004), CE marking (EN60034-1, EN60034-5), RoHS directive				

*1 The maximum rotation speed is 5000r/min when using the motor in combination with Fuji's gear head.

*2 The load inertia ratio to the inertia of servo motor. If the moment of load inertia ratio value exceeds the list value, please contact us.

■Brake specification (motor equipped with a brake)

Motor type	**GYS500D5 - □□ 2-B**	**GYS101D5 - □□ 2-B**	**GYS201D5 - □□ 2-B**	**GYS401D5 - □□ 2-B**	**GYS751D5 - □□ 2-B**
Static friction torque [N · m]	0.34		1.27		2.45
Rated DC voltage [V]	DC24±10%				
Attraction time [ms]	35		40		60
Release time [ms]	10		20		25
Power consumption [W]	6.1 (at 20°C)		7.3 (at 20°C)		8.5 (at 20°C)

■Torque characteristics diagrams (at 3-phase 200 [V] or single-phase 230 [V] source voltage)

GYS500D5- □□ 2	**GYS101D5- □□ 2**	**GYS201D5- □□ 2**	**GYS401D5- □□ 2**	**GYS751D5- □□ 2**
0.05kW	0.1kW	0.2kW	0.4kW	0.75kW

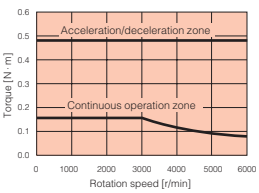

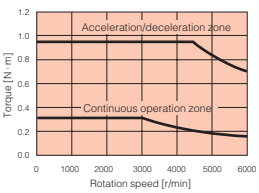

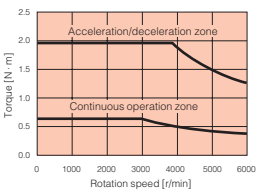

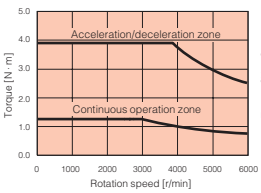

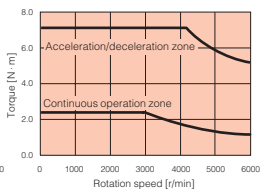

These characteristics indicate typical values of each servomotor combined with the corresponding RYT type servo amplifier.
The rated torque indicates the value obtained when the servo amplifier is installed to the following aluminum heat sink.

- Model GYS500, 101: 200 × 200 × 6 [mm]
- Model GYS201, 401: 250 × 250 × 6 [mm]
- Model GYS751: 300 × 300 × 6 [mm]

Specifications of Servomotor

GYS Motor

200V series

■Standard specifications

Motor type (-B) indicates the brake-incorporated type.	GYS102D5 - □□ 2 (-B)	GYS152D5 - □□ 2 (-B)	GYS202D5 - □□ 2 (-B)	GYS302D5 - □□ 2 (-B)	GYS402D5 - □□ 2 (-B)	GYS502D5 - □□ 2 (-B)
Rated output [kW]	1.0	1.5	2.0	3.0	4.0	5.0
Rated torque [N · m]	3.18	4.78	6.37	9.55	12.7	15.9
Rated speed [r/min]	3000					
Max. speed [r/min]	5000					
Max. torque [N · m]	9.55	14.3	19.1	28.7	38.2	47.8
Inertia [kg · m²]	1.73×10^{-4}	2.37×10^{-4}	3.01×10^{-4}	8.32×10^{-4}	10.8×10^{-4}	12.8×10^{-4}
( ) indicates brake-incorporated type.	(2.03×10^{-4})	(2.67×10^{-4})	(3.31×10^{-4})	(10.42×10^{-4})	(12.9×10^{-4})	(14.9×10^{-4})
Recommended load inertia ratio	20 times or less*1					
Rated current [A]	7.1	9.6	12.6	18.0	24.0	30.0
Max. current [A]	21.3	28.8	37.8	54.0	72.0	90.0
Winding insulation class	Class F					
Operation duty type	Continuous					
Degree of enclosure protection	Totally enclosed, self-cooled (IP 67. excluding the shaft sealing)*2					
Terminals (motor)	Cannon connector					
Terminals (encoder)	Cannon connector					
Overheat protection	Not provided (The servo amplifier detects temperature.)					
Mounting method	By securing motor flange IMB5 (L51), IMV1 (L52), IMV3 (L53)					
Shaft extension	Straight shaft					
Paint color	N1.5					
Encoder	18-bit serial encoder (absolute/incremental), 20-bit serial encoder (incremental)					
Vibration level	Up to rated rotation speed: V10 or below Over rated rotation speed and up to 5000r/min: V15 or below					
Installation place, altitude and environment	For indoor use (free from direct sunlight), 1000m or below, locations without corrosive and flamable gases, oil mist and dust					
Ambient temperature, humidity	-10 to +40°C, within 90% RH max.(without condensation)					
Vibration resistance [m/s²]	24.5					
Mass [kg]	4.4	5.2	6.3	11.0	13.5	16.0
( ) indicates brake-incorporated type.	(5.9)	(6.8)	(7.9)	(13.0)	(15.5)	(18.0)
Compliance with standards	UL/cUL (UL1004), CE marking (EN60034-1, EN60034-5), RoHS directive					

*1 The load inertia ratio to the inertia of servo motor. If the moment of load inertia ratio value exceeds the list value, please contact us.
*2 If the motor is used in the environment rated to IP67 protection degree, use the wiring connector suitable for the protection degree.

■Brake specification (motor equipped with a brake)

Motor type	GYS102D5 - □□ 2-B	GYS152D5 - □□ 2-B	GYS202D5 - □□ 2-B	GYS302D5 - □□ 2-B	GYS402D5 - □□ 2-B	GYS502D5 - □□ 2-B
Static friction torque [N · m]	6.86			17		
Rated DC voltage [V]	DC24±10%					
Attraction time [ms]	100			120		
Release time [ms]	40			30		
Power consumption [W]	17.7 (at 20°C)			12 (at 20°C)		

■Torque characteristics diagrams (at 3-phase 200 [V] or single-phase 230 [V] source voltage)

GYS102D5- □□ 2	GYS152D5- □□ 2	GYS202D5- □□ 2	GYS302D5- □□ 2
1.0kW	1.5kW	2.0kW	3.0kW

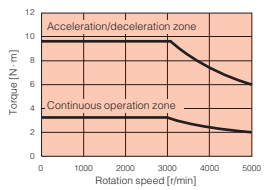

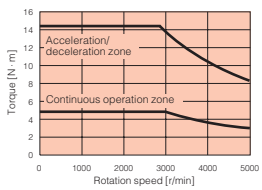

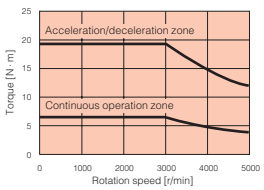

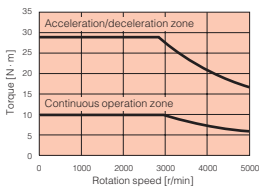

GYS402D5- □□ 2	GYS502D5- □□ 2
4.0kW	5.0kW

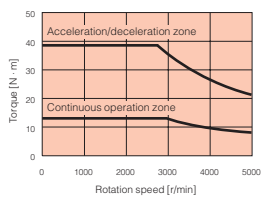

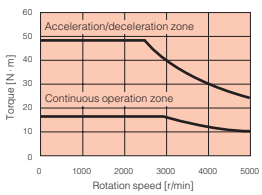

These characteristics indicate typical values of each servomotor combined with the corresponding RYT type servo amplifier.
The rated torque indicates the value obtained when the servo amplifier is installed to the following aluminum heat sink.

- Model GYS102, 152, 202: 350 × 350 × 8 [mm]
- Model GYS302, 402, 502: 400 × 400 × 12 [mm]

Specifications of Servomotor

GYS Motor

100V series

■Standard specifications

Motor type (-B) indicates the brake-incorporated type.	GYS500D5 - □□ 6 (-B)	GYS101D5 - □□ 6 (-B)	GYS201D5 - □□ 6 (-B)	GYS401D5 - □□ 6 (-B)
Rated output [kW]	0.05	0.1	0.2	0.375
Rated torque [N · m]	0.159	0.318	0.637	1.19
Rated speed [r/min]	3000			
Max. speed [r/min]	6000*1			
Max. torque [N · m]	0.478	0.955	1.91	3.58
Inertia [kg · m²] ( ) indicates brake-incorporated type.	0.0192×10^{-4} (0.0223×10^{-4})	0.0371×10^{-4} (0.0402×10^{-4})	0.135×10^{-4} (0.159×10^{-4})	0.246×10^{-4} (0.270×10^{-4})
Recommended load inertia ratio	30 times or less*2			
Rated current [A]	0.85	1.5	2.7	4.8
Max. current [A]	2.55	4.5	8.1	14.4
Winding insulation class	Class B			
Operation duty type	Continuous			
Degree of enclosure protection	Totally enclosed, self-cooled (IP 67. excluding the shaft sealing and connectors)			
Terminals (motor)	Cable 0.3m (with connector)			
Terminals (encoder)	Cable 0.3m (with connector)			
Overheat protection	Not provided (The servo amplifier detects temperature.)			
Mounting method	By securing motor flange IMB5 (L51), IMV1 (L52), IMV3 (L53)			
Shaft extension	Straight shaft			
Paint color	N1.5			
Encoder	18-bit serial encoder (absolute/incremental), 20-bit serial encoder (incremental)			
Vibration level	V5 or below			
Installation place, altitude and environment	For indoor use (free from direct sunlight), 1000m or below, locations without corrosive and flamable gases, oil mist and dust			
Ambient temperature, humidity	-10 to +40°C, within 90% RH max.(without condensation)			
Vibration resistance [m/s²]	49			
Mass [kg] ( ) indicates brake-incorporated type.	0.45 (0.6)	0.55 (0.7)	1.2 (1.7)	1.8 (2.3)
Compliance with standards	UL/cUL (UL1004), CE marking (EN60034-1, EN60034-5), RoHS directive			

*1 The maximum rotation speed is 5000r/min when using the motor in combination with Fuji's gear head.
*2 The load inertia ratio to the inertia of servo motor. If the moment of load inertia ratio value exceeds the list value, please contact us.

■Brake specification (motor equipped with a brake)

Motor type	GYS500D5 - □□ 6-B	GYS101D5 - □□ 6-B	GYS201D5 - □□ 6-B	GYS401D5 - □□ 6-B
Static friction torque [N · m]	0.34		1.27	
Rated DC voltage [V]	DC24±10%			
Attraction time [ms]	35		40	
Release time [ms]	10		20	
Power consumption [W]	6.1 (at 20°C)		7.3 (at 20°C)	

■Torque characteristics diagrams (at single-phase 100 [V] source voltage)

GYS500D5- □□ 6	GYS101D5- □□ 6	GYS201D5- □□ 6	GYS401D5- □□ 6
0.05kW	0.1kW	0.2kW	0.375kW

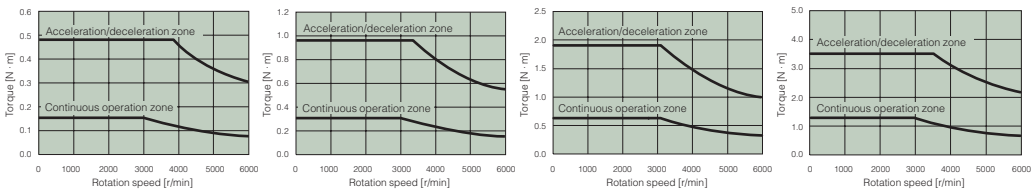

These characteristics indicate typical values of each servomotor combined with the corresponding RYT type servo amplifier.
The rated torque indicates the value obtained when the servo amplifier is installed to the following aluminum heat sink.

- Model GYS500, 101: 200 × 200 × 6 [mm]
- Model GYS201, 401: 250 × 250 × 6 [mm]

Specifications of Servomotor

GYC Motor

■Standard specifications

Motor type (-B) indicates the brake-incorporated type.	GYC101D5 - □□ 2 (-B)	GYC201D5 - □□ 2 (-B)	GYC401D5 - □□ 2 (-B)	GYC751D5 - □□ 2 (-B)	GYC102D5 - □□ 2 (-B)	GYC152D5 - □□ 2 (-B)	GYC202D5 - □□ 2 (-B)
Rated output [kW]	0.1	0.2	0.4	0.75	1.0	1.5	2.0
Rated torque [N · m]	0.318	0.637	1.27	2.39	3.18	4.78	6.37
Rated speed [r/min]	3000						
Max. speed [r/min]	6000*1				5000		
Max. torque [N · m]	0.955	1.91	3.82	7.17	9.55	14.3	19.1
Inertia [kg · m²] ( ) indicates brake-incorporated type.	0.0577×10^{-4} (0.0727×10^{-4})	0.213×10^{-4} (0.288×10^{-4})	0.408×10^{-4} (0.483×10^{-4})	1.21×10^{-4} (1.66×10^{-4})	3.19×10^{-4} (5.29×10^{-4})	4.44×10^{-4} (6.54×10^{-4})	5.69×10^{-4} (7.79×10^{-4})
Recommended load inertia ratio	30 times or less*2				20 times or less*2		
Rated current [A]	1.0	1.5	2.6	4.8	6.7	9.6	12.6
Max. current [A]	3.0	4.5	7.8	14.4	20.1	28.8	37.8
Winding insulation class	Class B				Class F		
Operation duty type	Continuous						
Degree of enclosure protection	Totally enclosed, self-cooled (IP 67. excluding the shaft sealing and connectors)				Totally enclosed, self-cooled (IP 67. excluding the shaft sealing)*3		
Terminals (motor)	Cable 0.3m (with connector)				Cannon connector		
Terminals (encoder)	Cable 0.3m (with connector)				Cannon connector		
Overheat protection	Not provided (The servo amplifier detects temperature.)						
Mounting method	By securing motor flange IMB5 (L51), IMV1 (L52), IMV3 (L53)						
Shaft extension	Straight shaft						
Paint color	N1.5						
Encoder	18-bit serial encoder (absolute/incremental), 20-bit serial encoder (incremental)						
Vibration level	V5 or below				Up to rated rotation speed: V10 or below Over rated rotation speed and up to 5000r/min: V15 or below		
Installation place, altitude and environment	For indoor use (free from direct sunlight), 1000m or below, locations without corrosive and flamable gases, oil mist and dust						
Ambient temperature, humidity	-10 to +40°C, within 90% RH max.(without condensation)						
Vibration resistance [m/s²]	49				24.5		
Mass [kg] ( ) indicates brake-incorporated type.	0.75 (1.0)	1.3 (1.9)	1.9 (2.6)	3.5 (4.3)	5.7 (8.0)	7.0 (9.8)	8.2 (11.0)
Compliance with standards	UL/cUL (UL1004), CE marking (EN60034-1, EN60034-5), RoHS directive						

*1 The maximum rotation speed is 5000r/min when using the motor in combination with Fuji's gear head.
*2 The load inertia ratio to the inertia of servo motor. If the moment of load inertia ratio value exceeds the list value, please contact us.
*3 If the motor is used in the environment rated to IP67 protection degree, use the wiring connector suitable for the protection degree.

■Brake specification (motor equipped with a brake)

Motor type	GYC101D5 - □□ 2-B	GYC201D5 - □□ 2-B	GYC401D5 - □□ 2-B	GYC751D5 - □□ 2-B	GYC102D5 - □□ 2-B	GYC152D5 - □□ 2-B	GYC202D5 - □□ 2-B
Static friction torque [N · m]	0.318	1.27		2.39	17		
Rated DC voltage [V]	DC24±10%						
Attraction time [ms]	60	80		50	120		
Release time [ms]	40			80	30		
Power consumption [W]	6.5 (at 20°C)	9.0 (at 20°C)		8.5 (at 20°C)	12 (at 20°C)		

■Torque characteristics diagrams (at 3-phase 200 [V] or single-phase 230 [V] source voltage)

GYC101D5- □□2	GYC201D5- □□2	GYC401D5- □□2	GYC751D5- □□2
0.1kW	0.2kW	0.4kW	0.75kW

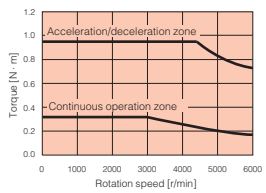

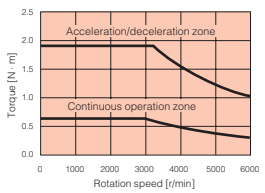

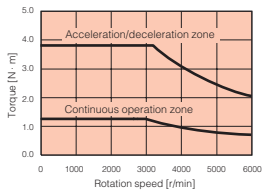

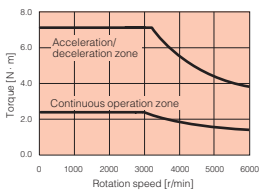

GYC102D5- □□2	GYC152D5- □□2	GYC202D5- □□2
1.0kW	1.5kW	2.0kW

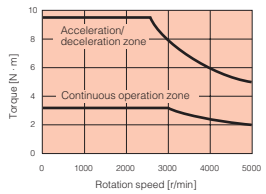

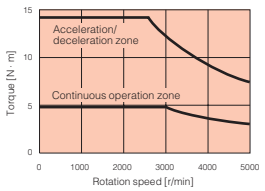

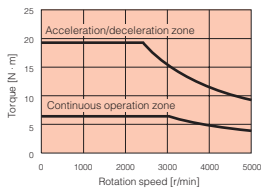

These characteristics indicate typical values of each servomotor combined with the corresponding RYT type servo amplifier.
The rated torque indicates the value obtained when the servo amplifier is installed to the following aluminum heat sink.

- Model GYC101, 201, 401: 250 × 250 × 6 [mm]
- Model GYC751: 300 × 300 × 6 [mm]
- Model GYC102D: 300 × 300 × 12 [mm]
- Model GYC152D, 202D: 400 × 400 × 12 [mm]

Specifications of Servomotor

GYG Motor [2000r/min]

■Standard specifications

Motor type (-B) indicates the brake-incorporated type.	GYG501C5 - □□ 2 (-B)	GYG751C5 - □□ 2 (-B)	GYG102C5 - □□ 2 (-B)	GYG152C5 - □□ 2 (-B)	GYG202C5 - □□ 2 (-B)
Rated output [kW]	0.5	0.75	1.0	1.5	2.0
Rated torque [N · m]	2.39	3.58	4.77	7.16	9.55
Rated speed [r/min]	2000				
Max. speed [r/min]	3000				
Max. torque [N · m]	7.2	10.7	14.3	21.5	28.6
Inertia [kg · m²]	7.96×10^{-4}	11.55×10^{-4}	15.14×10^{-4}	22.33×10^{-4}	29.51×10^{-4}
( ) indicates brake-incorporated type.	(10.0×10^{-4})	(13.6×10^{-4})	(17.2×10^{-4})	(24.4×10^{-4})	(31.6×10^{-4})
Recommended load inertia ratio	10 times or less*1				
Rated current [A]	3.5	5.2	6.4	10	12.3
Max. current [A]	10.5	15.6	19.2	30.0	36.9
Winding insulation class	Class F				
Operation duty type	Continuous				
Degree of enclosure protection	Totally enclosed, self-cooled (IP 67. excluding the shaft sealing)*2				
Terminals (motor)	Cannon connector				
Terminals (encoder)	Cannon connector				
Overheat protection	Not provided (The servo amplifier detects temperature.)				
Mounting method	By securing motor flange IMB5 (L51), IMV1 (L52), IMV3 (L53)				
Shaft extension	Straight shaft				
Paint color	N1.5				
Encoder	18-bit serial encoder (absolute/incremental), 20-bit serial encoder (incremental)				
Vibration level	V10 or below				
Installation place, altitude and environment	For indoor use (free from direct sunlight), 1000m or below, locations without corrosive and flamable gases, oil mist and dust				
Ambient temperature, humidity	-10 to +40°C, within 90% RH max.(without condensation)				
Vibration resistance [m/s²]	24.5				
Mass [kg]	5.3	6.4	7.5	9.8	12.0
( ) indicates brake-incorporated type.	(7.5)	(8.6)	(9.7)	(12.0)	(14.2)
Compliance with standards	UL/cUL (UL1004), CE marking (EN60034-1, EN60034-5), RoHS directive				

*1 The load inertia ratio to the inertia of servo motor. If the moment of load inertia ratio value exceeds the list value, please contact us.
*2 If the motor is used in the environment rated to IP67 protection degree, use the wiring connector suitable for the protection degree.

■Brake specification (motor equipped with a brake)

Motor type	GYG501C5 - □□ 2-B	GYG751C5 - □□ 2-B	GYG102C5 - □□ 2-B	GYG152C5 - □□ 2-B	GYG202C5 - □□ 2-B
Static friction torque [N · m]	17				
Rated DC voltage [V]	DC24±10%				
Attraction time [ms]	120				
Release time [ms]	30				
Power consumption [W]	12 (at 20°C)				

■Torque characteristics diagrams (at 3-phase 200[V])

GYG501C5- □□ 2	GYG751C5- □□ 2	GYG102C5- □□ 2	GYG152C5- □□ 2	GYG202C5- □□ 2
0.5kW	0.75kW	1.0kW	1.5kW	2.0kW

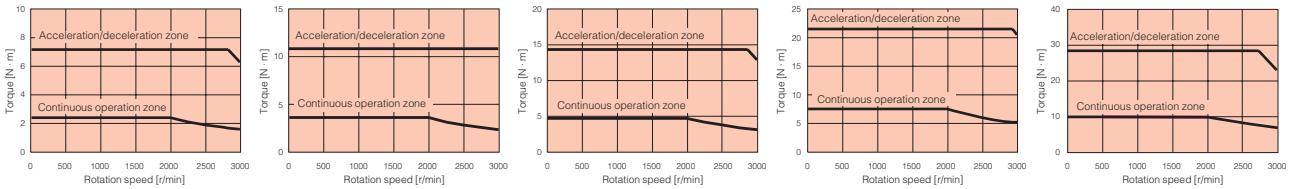

These characteristics indicate typical values of each servomotor combined with the corresponding RYT type servo amplifier.
The rated torque indicates the value obtained when the servo amplifier is installed to the following aluminum heat sink.

· Model GYG501C, 751C, 102C: 300 × 300 × 12 [mm]
· Model GYG152, 202: 400 × 400 × 12 [mm]

Specifications of Servomotor

GYG Motor [1500r/min]

■Standard specifications

Motor type (-B) indicates the brake-incorporated type.	GYG501B5 - □□ 2 (-B)	GYG851B5 - □□ 2 (-B)	GYG132B5 - □□ 2 (-B)
Rated output [kW]	0.5	0.85	1.3
Rated torque [N · m]	3.18	5.41	8.28
Rated speed [r/min]	1500		
Max. speed [r/min]	3000		
Max. torque [N · m]	9.5	16.2	24.8
Inertia [kg · m²] ( ) indicates brake-incorporated type.	11.55×10^{-4} (13.6×10^{-4})	15.15×10^{-4} (17.3×10^{-4})	22.33×10^{-4} (24.5×10^{-4})
Recommended load inertia ratio	10 times or less*1		
Rated current [A]	4.7	7.3	11.5
Max. current [A]	14.1	21.9	34.5
Winding insulation class	Class F		
Operation duty type	Continuous		
Degree of enclosure protection	Totally enclosed, self-cooled (IP 67. excluding the shaft sealing)*2		
Terminals (motor)	Cannon connector		
Terminals (encoder)	Cannon connector		
Overheat protection	Not provided (The servo amplifier detects temperature.)		
Mounting method	By securing motor flange IMB5 (L51), IMV1 (L52), IMV3 (L53)		
Shaft extension	Straight shaft		
Paint color	N1.5		
Encoder	18-bit serial encoder (absolute/incremental), 20-bit serial encoder (incremental)		
Vibration level	V10 or below		
Installation place, altitude and environment	For indoor use (free from direct sunlight), 1000m or below, locations without corrosive and flamable gases, oil mist and dust		
Ambient temperature, humidity	-10 to +40°C, within 90% RH max.(without condensation)		
Vibration resistance [m/s²]	24.5		
Mass [kg] ( ) indicates brake-incorporated type.	6.4 (8.6)	7.5 (9.7)	9.8 (12.0)
Compliance with standards	UL/cUL (UL1004), CE marking (EN60034-1, EN60034-5), RoHS directive		

*1 The load inertia ratio to the inertia of servo motor. If the moment of load inertia ratio value exceeds the list value, please contact us.
*2 If the motor is used in the environment rated to IP67 protection degree, use the wiring connector suitable for the protection degree.

■Brake specification (motor equipped with a brake)

Motor type	GYG501B5 - □□ 2-B	GYG851B5 - □□ 2-B	GYG132B5 - □□ 2-B
Static friction torque [N · m]	17		
Rated DC voltage [V]	DC24±10%		
Attraction time [ms]	120		
Release time [ms]	30		
Power consumption [W]	12 (at 20°C)		

■Torque characteristics diagrams (at 3-phase 200[V])

GYG501B5- □□ 2	GYG851B5- □□ 2	GYG132B5- □□ 2
0.5kW	0.85kW	1.3kW

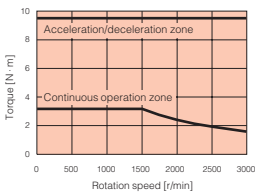

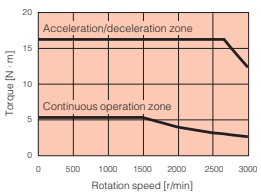

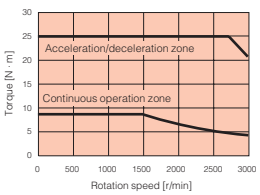

These characteristics indicate typical values of each servomotor combined with the corresponding RYT type servo amplifier.
The rated torque indicates the value obtained when the servo amplifier is installed to the following aluminum heat sink.

- Model GYG501B, 851B: 300 × 300 × 12 [mm]
- Model GYG132: 400 × 400 × 12 [mm]

Option/Peripheral Equipment

<Major example : 750W or less / 3000r/min>

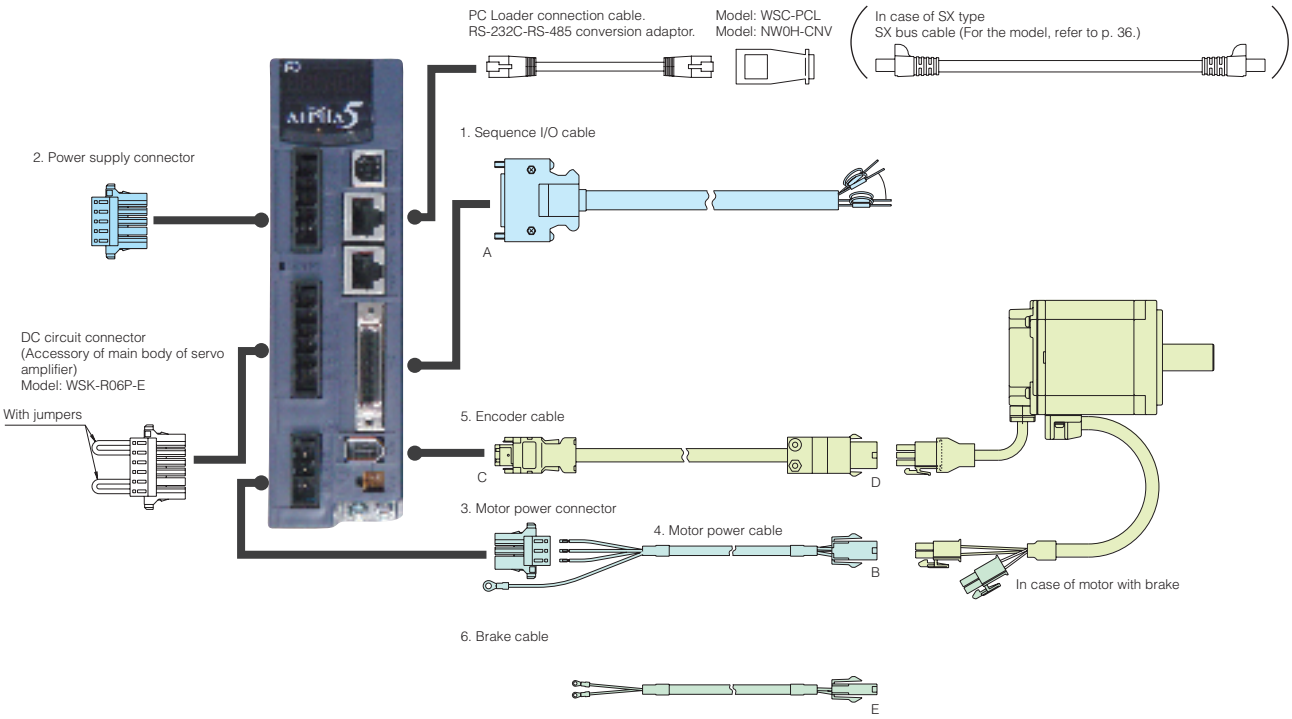

Option

■Basic option

Motor series	Rated speed	Brake	Rated output	1. Sequence I/O cable (between host and amplifier)	2. Power supply connector	3. Motor power connector (on amplifier side)	4. Motor power cable (between amplifier and motor)	5. Encoder cable (between amplifier and motor)	6. Brake cable
GYS motor	3000r/min	Without brake	0.05kW to 0.75kW	WSC-D36P03	WSK-S05P-E	WSK-M03P-E (Excluding 2kW)	WSC-M04P02-E WSC-M04P05-E WSC-M04P10-E WSC-M04P20-E	WSC-P06P02-E WSC-P06P05-E WSC-P06P10-E WSC-P06P20-E	—
		With brake							WSC-M02P02-E WSC-M02P05-E WSC-M02P10-E WSC-M02P20-E
		Without brake	1.0kW to 2.0kW				*1	WSC-P06P05-C WSC-P06P10-C WSC-P06P20-C	—
		With brake					*2		—
		Without brake	3.0kW to 5.0kW		—	—	*3		—
		With brake			—	—	*4		—
GYC motor	3000r/min	Without brake	0.05kW to 0.75kW		WSK-S05P-E	WSK-M03P-E (Excluding 2kW)	WSC-M04P02-E WSC-M04P05-E WSC-M04P10-E WSC-M04P20-E	WSC-P06P02-E WSC-P06P05-E WSC-P06P10-E WSC-P06P20-E	—
		With brake							WSC-M02P02-E WSC-M02P05-E WSC-M02P10-E WSC-M02P20-E
		Without brake	1.0kW to 2.0kW				*3	WSC-P06P05-C WSC-P06P10-C WSC-P06P20-C	—
		With brake					*4		*No cable is required.
GYG motor	2000r/min	Without brake	0.5kW to 1.0kW		WSK-S05P-E	WSK-M03P-E	*1		—
		With brake					*2		*No cable is required.
		Without brake	1.5kW to 2.0kW		—	—	*1		—
		With brake			—	—	*2		*No cable is required.
	1500r/min	Without brake	0.5kW to 0.85kW		WSK-S05P-E	WSK-M03P-E	*1		—
		With brake					*2		*No cable is required.
		Without brake	1.3kW		—	—	*1		—
		With brake			—	—	*2		*No cable is required.

*1 The customer is requested to fabricate the cable using the connector for motor power (motor without brake): WSK-M04P-CA.
*2 The customer is requested to fabricate the cable using the connector for motor power (motor with brake): WSK-M06P-CA.
*3 The customer is requested to fabricate the cable using the connector for motor power (motor without brake): WSK-M04P-CB.
*4 The customer is requested to fabricate the cable using the connector for motor power (motor with brake): WSK-M06P-CB.

Option/Peripheral Equipment

Option

■Connector kit

* Use this connector if the customer fabricates the cable yourself.

Motor series	Rated speed	Brake	Rated output	A Sequence I/O connector	B Motor power connector (on motor side)	Encoder connector		E Brake connector
						C Amplifier side	D Motor side	
GYS motor	3000r/min	Without brake	0.05kW to 0.75kW	WSK-D36P	WSK-M04P-E	WSK-P06P-M	WSK-P09P-D	—
		With brake						WSK-M02P-E
		Without brake	1.0kW to 1.5kW		WSK-M04P-CA		WSK-P06P-C	—
		With brake			WSK-M06P-CA			—
		Without brake	2.0kW		WSK-M04P-CA			—
		With brake			WSK-M06P-CA			—
		Without brake	3.0kW to 5.0kW		WSK-M04P-CB			—
		With brake			WSK-M06P-CB			—
GYC motor	3000r/min	Without brake	0.05kW to 0.75kW		WSK-M04P-E		WSK-P09P-D	—
		With brake						WSK-M02P-E
		Without brake	1.0kW to 1.5kW		WSK-M04P-CB		WSK-P06P-C	—
		With brake			WSK-M06P-CB			
		Without brake	2.0kW		WSK-M04P-CB			
		With brake			WSK-M06P-CB			
GYG motor	2000r/min	Without brake	0.5kW to 1.0kW		WSK-M04P-CA			
		With brake			WSK-M06P-CA			
		Without brake	1.5kW to 2.0kW		WSK-M04P-CA			
		With brake			WSK-M06P-CA			
	1500r/min	Without brake	0.5kW to 0.85kW		WSK-M04P-CA			
		With brake			WSK-M06P-CA			
		Without brake	1.3kW		WSK-M04P-CA			
		With brake			WSK-M06P-CA			

Peripheral equipment

Rated speed	Input power supply	Servo amplifier type	Output of applied motor [kW]	Power supply capacity [kVA]	Input current [A]	Power filter	AC reactor	DC reactor	Molded case circuit breaker	Ground fault interruptor	Electromagnetic contactor
3000r/min	Single-phase 100V	RYT500D5- □□6	0.05	0.1	1.5	RNFTC06-20	ACR2-0.4A	DCR2-0.4	EA32AC/3	EG32AC/3	SC-03
		RYT101D5- □□6	0.1	0.2	2.6		ACR2-0.75A	DCR2-0.75	EA32AC/5	EG32AC/5	
		RYT201D5- □□6	0.2	0.4	4.8	RNFTC10-20	ACR2-1.5A	DCR2-1.5	EA32AC/10	EG32AC/10	
		RYT401D5- □□6	0.375	0.8	8.7	RNFTC20-20	ACR2-2.2A	DCR2-2.2	EA32AC/15	EG32AC/15	SC-0
	Single-phase 200V	RYT500D5- □□2	0.05	0.1	0.7	RNFTC06-20	ACR2-0.4A	DCR2-0.2	EA32AC/3	EG32AC/3	SC-03
		RYT101D5- □□2	0.1	0.2	1.3			DCR2-0.4			
		RYT201D5- □□2	0.2	0.4	2.4		ACR2-0.75A	DCR2-0.75	EA32AC/5	EG32AC/5	
		RYT401D5- □□2	0.4	0.8	4.7	RNFTC10-20	ACR2-1.5A	DCR2-1.5	EA32AC/10	EG32AC/10	
		RYT751D5- □□2	0.75	1.5	8.6	RNFTC20-20	ACR2-2.2A	DCR2-2.2	EA32AC/15	EG32AC/15	SC-0
	3-phase 200V	RYT500D5- □□2	0.05	0.1	0.4	RNFTC06-20	ACR2-0.4A	DCR2-0.2	EA33AC/3	EG33AC/3	SC-03
		RYT101D5- □□2	0.1	0.2	0.7						
		RYT201D5- □□2	0.2	0.4	1.4			DCR2-0.4			
		RYT401D5- □□2	0.4	0.8	2.7		ACR2-0.75A	DCR2-0.75	EA33AC/5	EG33AC/5	
		RYT751D5- □□2	0.75	1.5	5.0	RNFTC10-20	ACR2-1.5A	DCR2-1.5	EA33AC/10	EG33AC/10	
		RYT102D5- □□2	1.0	2.0	6.6		ACR2-2.2A	DCR2-2.2	EA33AC/15	EG33AC/15	
		RYT152D5- □□2	1.5	2.9	9.8	RNFTC20-20			EA33AC/20	EG33AC/20	SC-4-1
		RYT202D5- □□2	2.0	3.9	13.0		ACR2-3.7A	DCR2-3.7	EA33AC/30	EG33AC/30	SC-4-1
		RYT302D5- □□2	3.0	5.9	19.5	RNFTC30-20	ACR2-5.5A	DCR2-5.5	EA53AC/40	EG53AC/40	SC-N1
		RYT402D5- □□2	4.0	7.8	26.0	RNFTC50-20	ACR2-7.5A	DCR2-7.5	EA53AC/50	EG53AC/50	SC-N2
		RYT502D5- □□2	5.0	9.8	32.5		ACR2-11A	DCR2-11	EA53AC/50	EG53AC/50	
2000r/min	Single-phase 200V	RYT501C5- □□2	0.5	1.0	5.8	RNFTC10-20	ACR2-1.5A	DCR2-1.5	EA32AC/10	EG32AC/10	SC-03
		RYT751C5- □□2	0.75	1.5	8.6	RNFTC20-20	ACR2-2.2A	DCR2-2.2	EA32AC/15	EG32AC/15	SC-0
	3-phase 200V	RYT501C5- □□2	0.5	1.0	3.3	RNFTC06-20	ACR2-0.75A	DCR2-0.75	EA33AC/10	EG33AC/10	SC-03
		RYT751C5- □□2	0.75	1.5	5.0	RNFTC10-20	ACR2-1.5A	DCR2-1.5			
		RYT102C5- □□2	1.0	2.0	6.6		ACR2-2.2A	DCR2-2.2	EA33AC/15	EG33AC/15	
		RYT152C5- □□2	1.5	2.9	9.8	RNFTC20-20			EA33AC/20	EG33AC/20	SC-4-1
		RYT202C5- □□2	2.0	3.9	13.0		ACR2-3.7A	DCR2-3.7	EA33AC/30	EG33AC/30	
1500r/min	Single-phase 200V	RYT501B5- □□2	0.5	1.0	5.8	RNFTC10-20	ACR2-1.5A	DCR2-1.5	EA32AC/10	EG32AC/10	SC-03
	3-phase 200V	RYT501B5- □□2	0.5	1.0	3.3	RNFTC06-20	ACR2-0.75A	DCR2-0.75	EA33AC/10	EG33AC/10	SC-03
		RYT851B5- □□2	0.85	1.7	5.6	RNFTC10-20	ACR2-1.5A	DCR2-1.5			
		RYT132B5- □□2	1.3	2.6	8.5	RNFTC20-20	ACR2-2.2A	DCR2-2.2	EA33AC/15	EG33AC/15	SC-0

External Dimensions

Servo amplifier

■Frame 1

Power supply	Rated speed	Applicable motor output	Type
100V series	3000r/min	0.05kW	RYT500D5- □□ 6
		0.1kW	RYT101D5- □□ 6
200V series		0.05kW	RYT500D5- □□ 2
		0.1kW	RYT101D5- □□ 2
		0.2kW	RYT201D5- □□ 2

(Unit: mm)

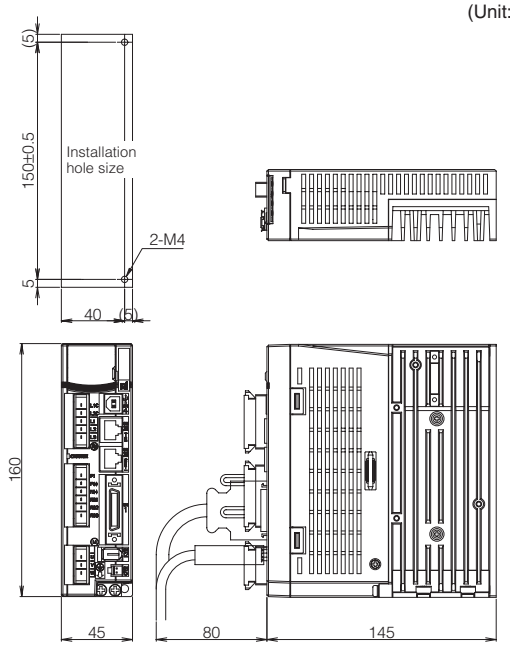

[Mass: 0.7kg]

■Frame 2

Power supply	Rated speed	Applicable motor output	Type
100V series	3000r/min	0.2kW	RYT201D5- □□ 6
200V series		0.4kW	RYT401D5- □□ 2

(Unit: mm)

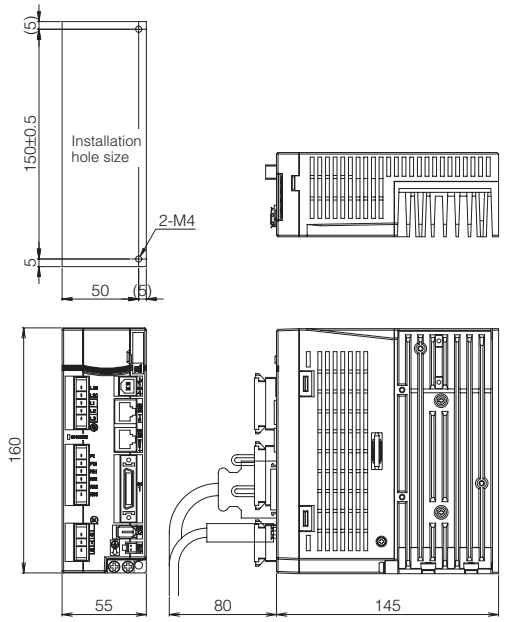

[Mass: 0.9kg]

■Frame 3

Power supply	Rated speed	Applicable motor output	Type
100V series	3000r/min	0.375kW	RYT401D5- □□ 6
200V series	1500r/min	0.5kW	RYT501B5- □□ 2
	2000r/min	0.5kW	RYT501C5- □□ 2
		0.75kW	RYT751C5- □□ 2
	3000r/min	0.75kW	RYT751D5- □□ 2

(Unit: mm)

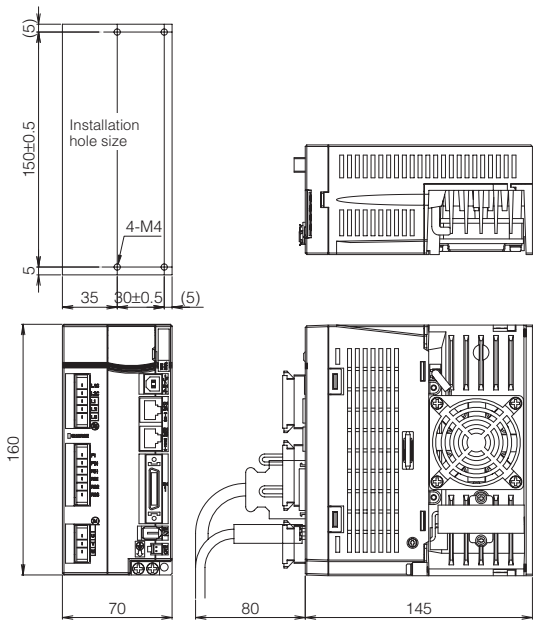

[Mass: 1.3kg]

■Frame 4

Rated speed	Applicable motor output	Type
1500r/min	0.85kW	RYT851B5- □□ 2
2000r/min	1.0kW	RYT102C5- □□ 2
3000r/min	1.0kW	RYT102D5- □□ 2
	1.5kW	RYT152D5- □□ 2

(Unit: mm)

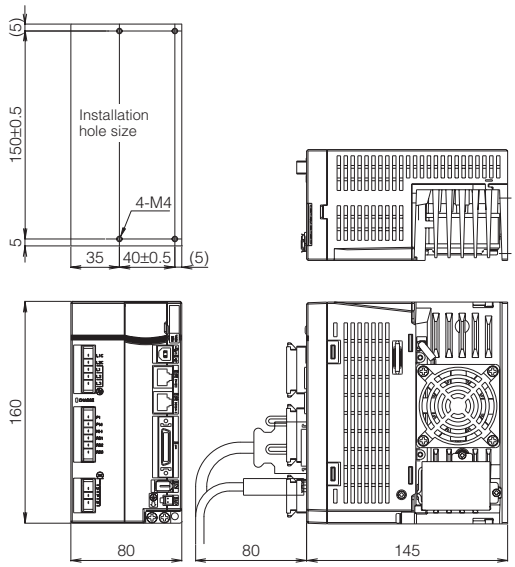

[Mass: 1.4kg]

External Dimensions

Servo amplifier

■Frame 5

Rated speed	Applicable motor output	Type	Mass
1500r/min	1.3kW	RYT132B5- □□ 2	2.9kg
2000r/min	1.5kW	RYT152C5- □□ 2	
	2.0kW	RYT202C5- □□ 2	
3000r/min	2.0kW	RYT202D5- □□ 2	2.6kg
	3.0kW	RYT302D5- □□ 2	

(Unit: mm)

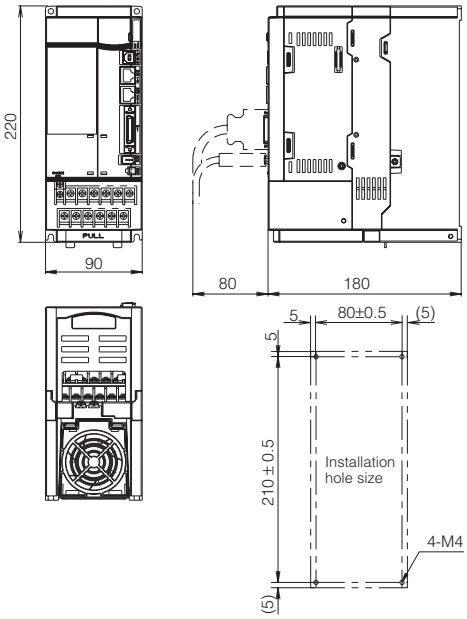

■Frame 6

Rated speed	Applicable motor output	Type
3000r/min	4.0kW	RYT402D5- □□ 2
	5.0kW	RYT502D5- □□ 2

(Unit: mm)

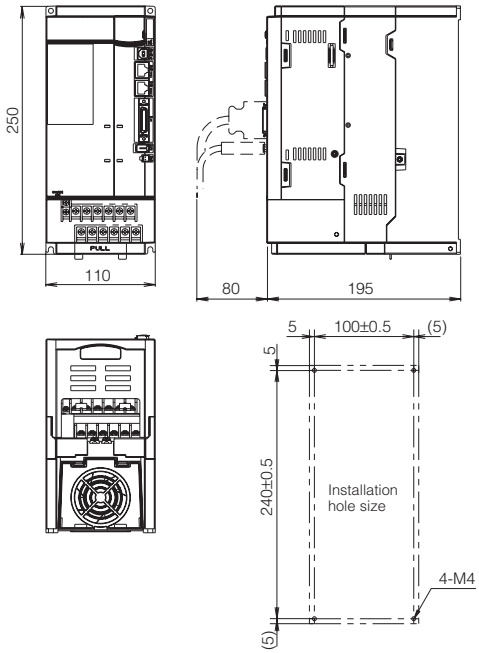

[Mass: 3.8kg]

External Dimensions

GYS Motor

Power supply	Rated speed	Rated output	Type	Shaft shape	Over length L	Dimensions(flange) LL	Mass [kg]
100V series	3000r/min	0.05kW	GYS500D5- □ B6	Fig. A	89	64	0.45
		0.1kW	GYS101D5- □ B6	Fig. B	107	82	0.55
200V series		0.05kW	GYS500D5- □ B2	Fig. A	89	64	0.45
		0.1kW	GYS101D5- □ B2	Fig. B	107	82	0.55

(Unit: mm)

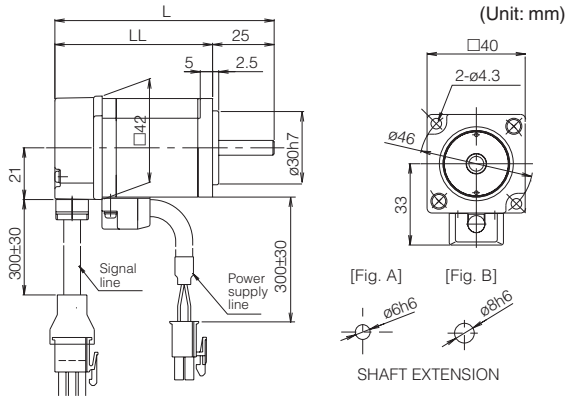

Power supply	Rated speed	Rated output	Type	Over length L	Dimensions(flange) LL	Mass [kg]
100V series	3000r/min	0.2kW	GYS201D5- □ B6	107.5	77.5	1.2
		0.375kW	GYS401D5- □ B6	135.5	105.5	1.8
200V series		0.2kW	GYS201D5- □ B2	107.5	77.5	1.2
		0.4kW	GYS401D5- □ B2	135.5	105.5	1.8

(Unit: mm)

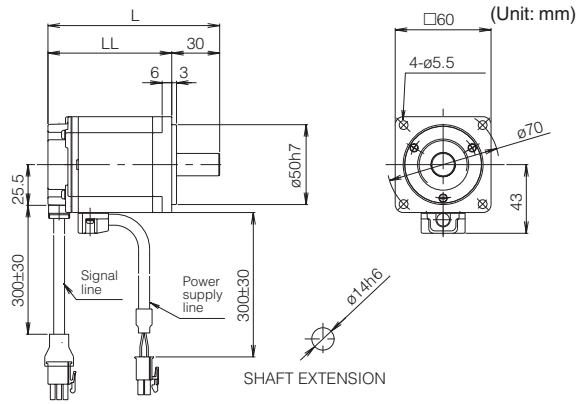

Rated speed	Rated output	Type
3000r/min	0.75kW	GYS751D5- □ B2

(Unit: mm)

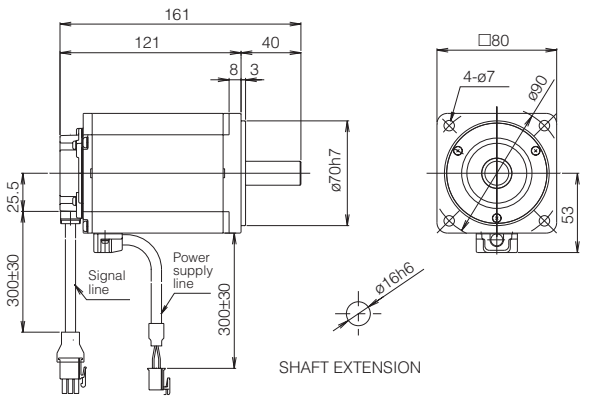

[Mass: 3.4kg]

Rated speed	Rated output	Type	Over length L	Dimensions(flange) LL	Terminal KB1	Mass [kg]
3000r/min	1kW	GYS102D5- □ B2	198	153	77	4.4
	1.5kW	GYS152D5- □ B2	220.5	175.5	99.5	5.2
	2kW	GYS202D5- □ B2	243	198	122	6.3

(Unit: mm)

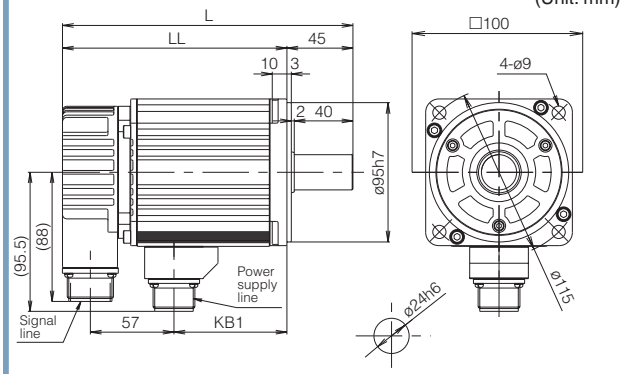

Rated speed	Rated output	Type	Over length L	Dimensions(flange) LL	Terminal KB1	Mass [kg]
3000r/min	3kW	GYS302D5- □ B2	266.5	203.5	125.5	11
	4kW	GYS402D5- □ B2	296.5	233.5	155.5	13.5
	5kW	GYS502D5- □ B2	326.5	263.5	185.5	16

(Unit: mm)

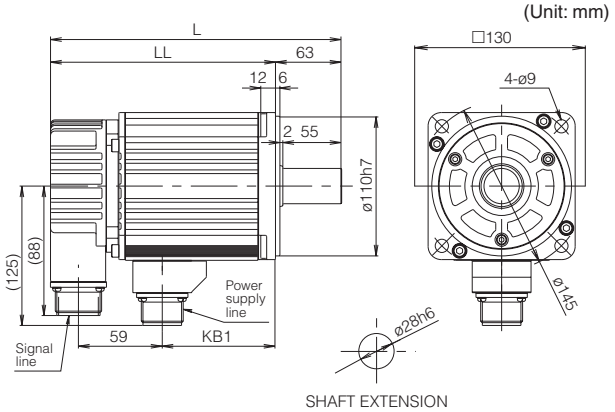

* See page 32 for the shaft extension specifications of the motor with a key.

External Dimensions

GYS Motor (With a brake)

Power supply	Rated speed	Rated output	Type	Shaft shape	Over length L	Dimensions(flange) LL	Mass [kg]
100V series	3000r/min	0.05kW	GYS500D5- □ B6-B	Fig. A	123.5	98.5	0.62
		0.1kW	GYS101D5- □ B6-B	Fig. B	141.5	116.5	0.72
200V series		0.05kW	GYS500D5- □ B2-B	Fig. A	123.5	98.5	0.62
		0.1kW	GYS101D5- □ B2-B	Fig. B	141.5	116.5	0.72

(Unit: mm)

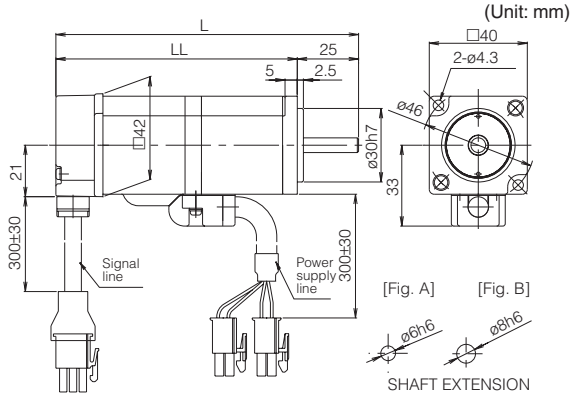

Power supply	Rated speed	Rated output	Type	Over length L	Dimensions(flange) LL	Mass [kg]
100V series	3000r/min	0.2kW	GYS201D5- □ B6-B	145.5	115.5	1.7
		0.375kW	GYS401D5- □ B6-B	173.5	143.5	2.3
200V series		0.2kW	GYS201D5- □ B2-B	145.5	115.5	1.7
		0.4kW	GYS401D5- □ B2-B	173.5	143.5	2.3

(Unit: mm)

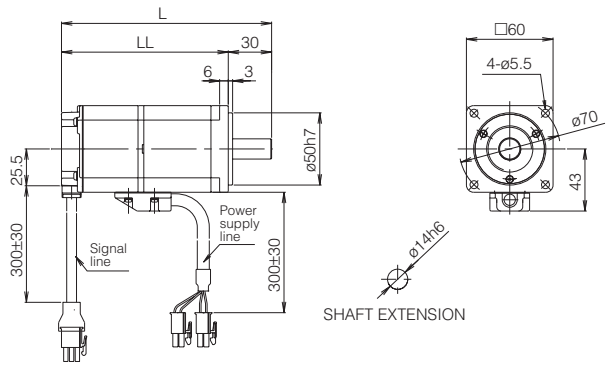

Rated speed	Rated output	Type
3000r/min	0.75kW	GYS751D5- □ B2-B

(Unit: mm)

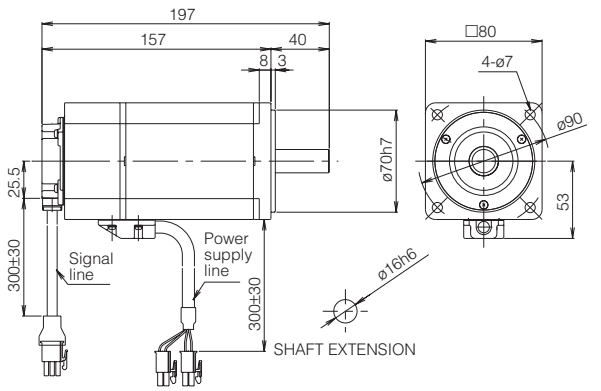

[Mass: 4.2kg]

Rated speed	Rated output	Type	Over length L	Dimensions(flange) LL	Terminal KB1	Mass [kg]
3000r/min	1kW	GYS102D5- □ B2-B	239	194	79	5.9
	1.5kW	GYS152D5- □ B2-B	261.5	216.5	101.5	6.8
	2kW	GYS202D5- □ B2-B	284	239	124	7.9

(Unit: mm)

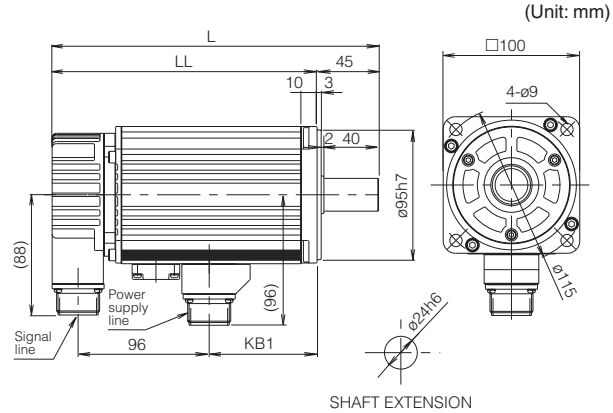

Rated speed	Rated output	Type	Over length L	Dimensions(flange) LL	Terminal KB1	Mass [kg]
3000r/min	3kW	GYS302D5- □ B2-B	308.5	245.5	127.5	13
	4kW	GYS402D5- □ B2-B	338.5	275.5	157.5	15.5
	5kW	GYS502D5- □ B2-B	368.5	305.5	187.5	18

(Unit: mm)

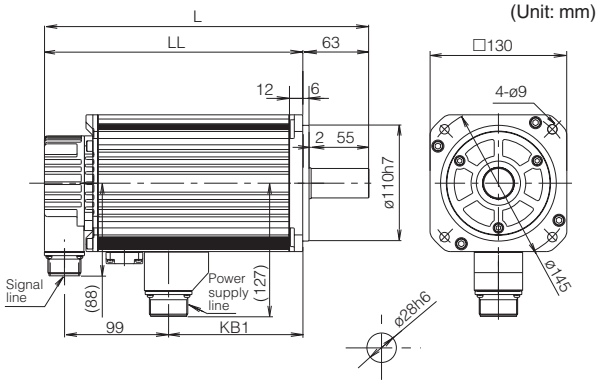

* See page 32 for the shaft extension specifications of the motor with a key.

External Dimensions

GYC Motor

Rated speed	Rated output	Type
3000r/min	0.1kW	GYC101D5- □ B2

(Unit: mm)

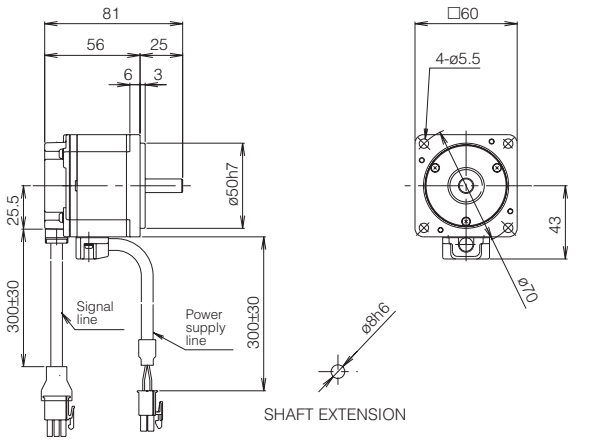

[Mass: 0.75kg]

Rated speed	Rated output	Type	Over length	Dimensions(flange)	Mass
			L	LL	[kg]
3000r/min	0.2kW	GYC201D5- □ B2	93	63	1.3
	0.4kW	GYC401D5- □ B2	108	78	1.9

(Unit: mm)

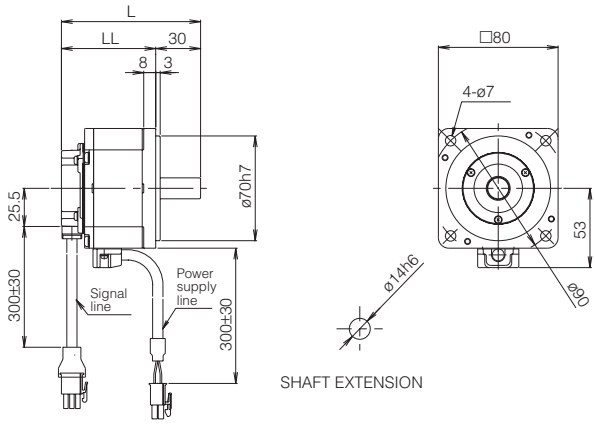

Rated speed	Rated output	Type
3000r/min	0.75kW	GYC751D5- □ B2

(Unit: mm)

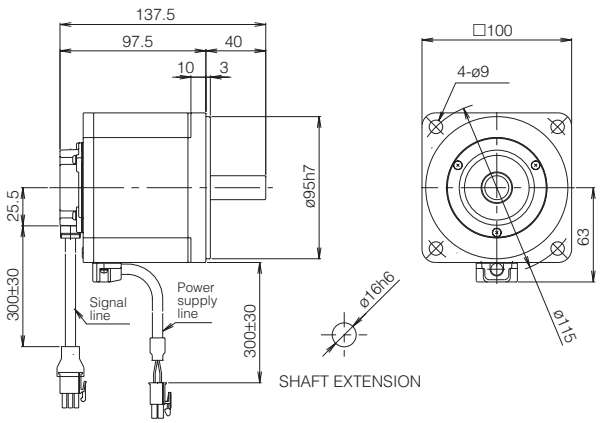

[Mass: 3.5kg]

Rated speed	Rated output	Type	Over length	Dimensions(flange)	Terminal	Mass
			L	LL	KB1	[kg]
3000r/min	1kW	GYC102D5- □ B2	197.5	139.5	65.5	5.7
	1.5kW	GYC152D5- □ B2	212.5	154.5	80.5	7.0
	2kW	GYC202D5- □ B2	227.5	169.5	95.5	8.2

(Unit: mm)

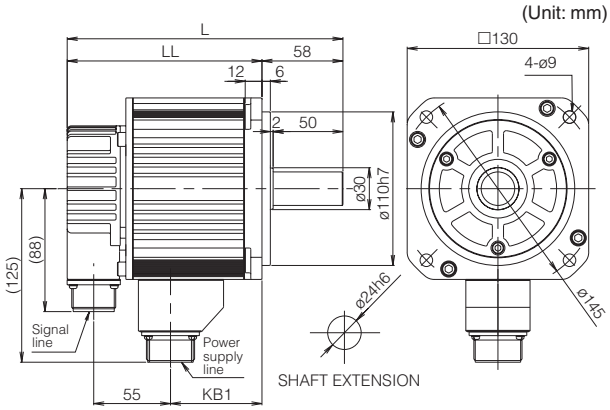

* See page 32 for the shaft extension specifications of the motor with a key.

External Dimensions

GYC Motor (With a brake)

Rated speed	Rated output	Type
3000r/min	0.1kW	GYC101D5- □ B2-B

(Unit: mm)

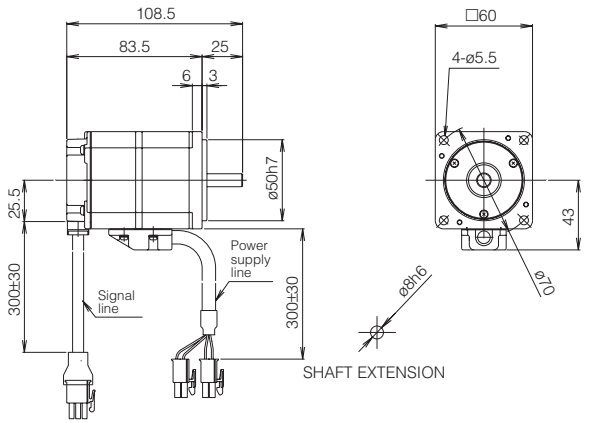

[Mass: 1.0kg]

Rated speed	Rated output	Type	Over length	Dimensions(flange)	Mass
			L	LL	[kg]
3000r/min	0.2kW	GYC201D5- □ B2-B	124	94	1.9
	0.4kW	GYC401D5- □ B2-B	139	109	2.6

(Unit: mm)

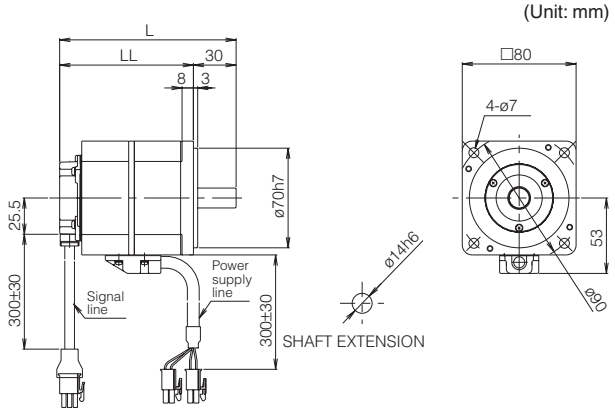

Rated speed	Rated output	Type
3000r/min	0.75kW	GYC751D5- □ B2-B

(Unit: mm)

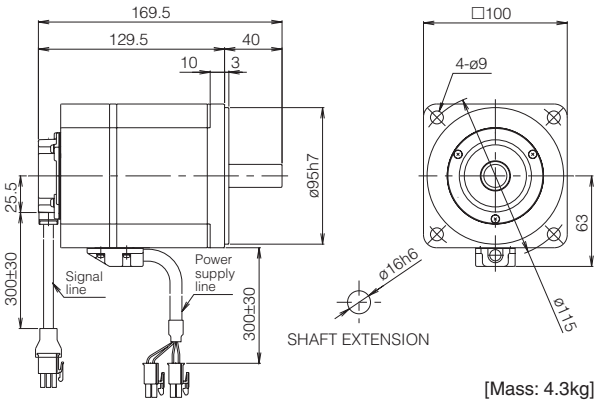

[Mass: 4.3kg]

Rated speed	Rated output	Type	Over length	Dimensions(flange)	Terminal	Mass
			L	LL	KB1	[kg]
3000r/min	1kW	GYC102D5- □ B2-B	239.5	181.5	67.5	8.0
	1.5kW	GYC152D5- □ B2-B	254.5	196.5	82.5	9.8
	2kW	GYC202D5- □ B2-B	269.5	211.5	97.5	11

(Unit: mm)

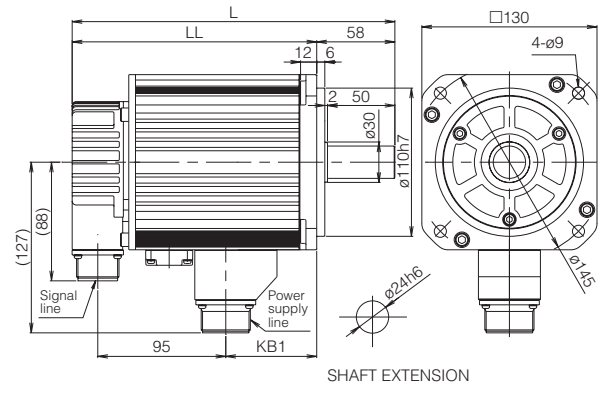

* See page 32 for the shaft extension specifications of the motor with a key.

External Dimensions

GYG Motor [2000r/min]

Rated speed	Rated output	Type	Over length L	Dimensions(flange) LL	Terminal KB1	Mass [kg]
2000r/min	0.5kW	GYG501C5- □ B2	175	120	47.5	5.3
	0.75kW	GYG751C5- □ B2	187.5	132.5	60	6.4

(Unit: mm)

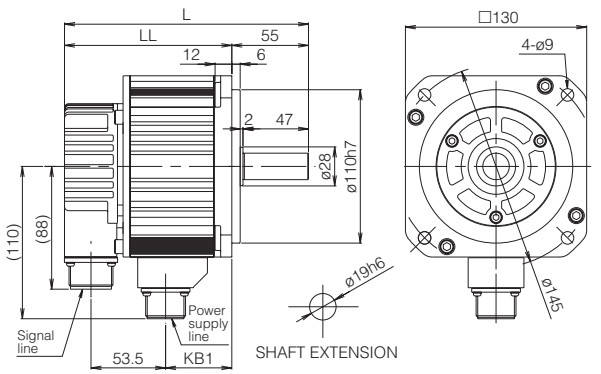

Rated speed	Rated output	Type	Over length L	Dimensions(flange) LL	Terminal KB1	Mass [kg]
2000r/min	1kW	GYG102C5- □ B2	200	145	72.5	7.5
	1.5kW	GYG152C5- □ B2	225	170	97.5	9.8
	2kW	GYG202C5- □ B2	250	195	122.5	12

(Unit: mm)

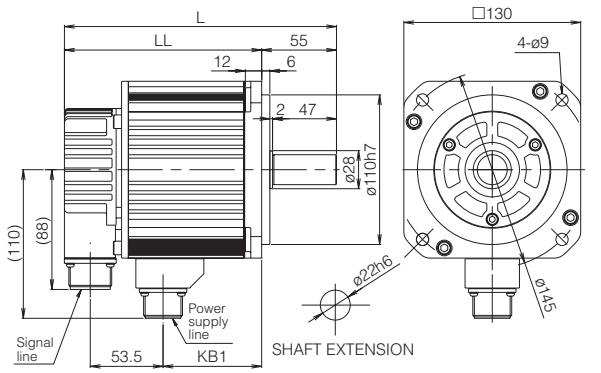

* See page 32 for the shaft extension specifications of the motor with a key.

GYG Motor [2000r/min] (With a brake)

Rated speed	Rated output	Type	Over length L	Dimensions(flange) LL	Terminal KB1	Mass [kg]
2000r/min	0.5kW	GYG501C5- □ B2-B	217.5	162.5	52	7.5
	0.75kW	GYG751C5- □ B2-B	230	175	64.5	8.6

(Unit: mm)

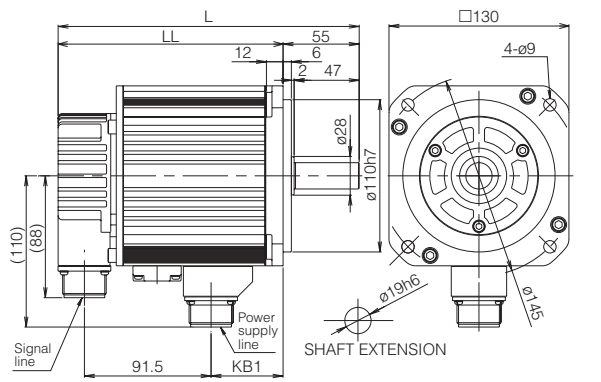

Rated speed	Rated output	Type	Over length L	Dimensions(flange) LL	Terminal KB1	Mass [kg]
2000r/min	1kW	GYG102C5- □ B2-B	242.5	187.5	77	9.7
	1.5kW	GYG152C5- □ B2-B	267.5	212.5	102	12
	2kW	GYG202C5- □ B2-B	292.5	237.5	127	14.2

(Unit: mm)

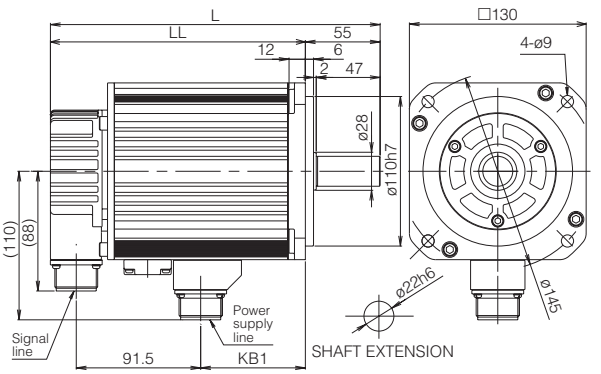

* See page 32 for the shaft extension specifications of the motor with a key.

External Dimensions

GYG Motor [1500r/min]

Rated speed	Rated output	Type	Over length L	Dimensions(flange) LL	Terminal KB1	Mass [kg]
1500r/min	0.5kW	GYG501B5- □ B2	190.5	132.5	60	6.4
	0.85kW	GYG851B5- □ B2	203	145	72.5	7.5

(Unit: mm)

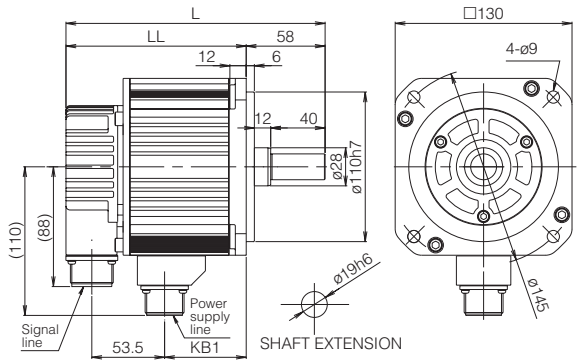

Rated speed	Rated output	Type
1500r/min	1.3kW	GYG132B5- □ B2

(Unit: mm)

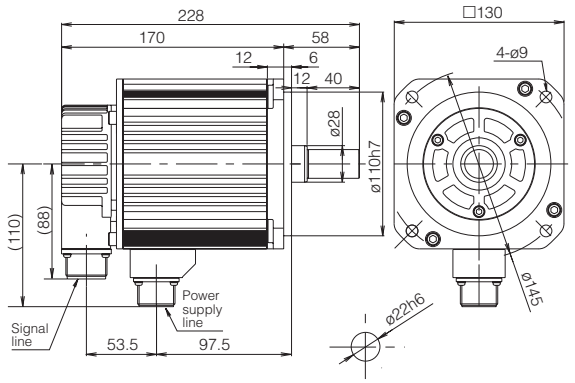

[Mass: 9.8kg]

* See page 32 for the shaft extension specifications of the motor with a key.

GYG Motor [1500r/min] (With a brake)

Rated speed	Rated output	Type	Over length L	Dimensions(flange) LL	Terminal KB1	Mass [kg]
1500r/min	0.5kW	GYG501B5- □ B2-B	233	175	64.5	8.6
	0.85kW	GYG851B5- □ B2-B	245.5	187.5	77	9.7

(Unit: mm)

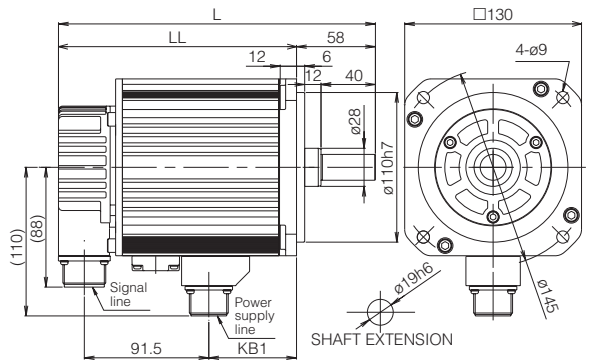

Rated speed	Rated output	Type
1500r/min	1.3kW	GYG132B5- □ B2-B

(Unit: mm)

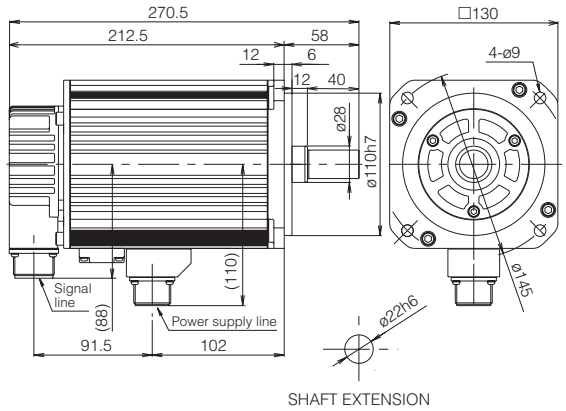

[Mass: 12kg]

* See page 32 for the shaft extension specifications of the motor with a key.

External Dimensions

Shaft Extension Specifications (wiht a key, tapped)

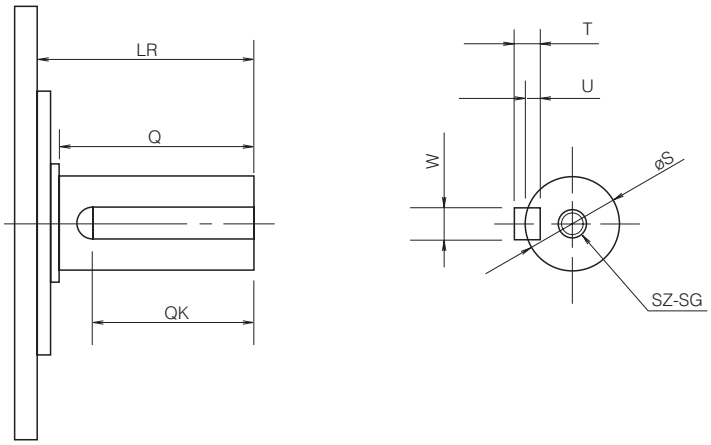

Motor type	LR	Q	QK	S	T	U	W	SZ	SG
GYS Motor									
GYS500D5-□A□-□ *1	25	-	14	ø6h6	2	1.2	2	-	-
GYS101D5-□A□-□ *1				ø8h6	3	1.8	3	-	-
GYS201D5-□C□-□	30		20	ø14h6	5	3	5	M5	8
GYS401D5-□C□-□									
GYS751D5-□C2-□	40		30	ø16h6					
GYS102D5-□C2-□	45	40	32	ø24h6	7	4	8	M8	16
GYS152D5-□C2-□									
GYS202D5-□C2-□									
GYS302D5-□C2-□	63	55	45	ø28h6					
GYS402D5-□C2-□									
GYS502D5-□C2-□									
GYC Motor									
GYC101D5-□A2-□ *1	25	-	14	ø8h6	3	1.8	3	-	-
GYC201D5-□C2-□	30		16	ø14h6	5	3	5	M5	8
GYC401D5-□C2-□									
GYC751D5-□C2-□	40		22	ø16h6					
GYC102D5-□C2-□	58	50	40	ø24h6	7	4	8	M8	16
GYC152D5-□C2-□									
GYC202D5-□C2-□									
GYG Motor 2000r/min									
GYG501C5-□C2-□	55	47	35	ø19h6	6	3.5	6	M6	12
GYG751C5-□C2-□									
GYG102C5-□C2-□				ø22h6	7	4	8	M8	16
GYG152C5-□C2-□									
GYG202C5-□C2-□									
GYG Motor 1500r/min									
GYG501B5-□C2-□	58	40	30	ø19h6	6	3.5	6	M6	12
GYG851B5-□C2-□									
GYG132B5-□C2-□				ø22h6	7	4	8	M8	16

*1 The shaft extension of the GYS and GYC motors of 0.1kW or less is not tapped.

Model List

Servo amplifier

Specifications						Product code	Type
Model	Control mode	Command interface	Input power supply	Applicable motor	Applicable motor output		
VV type	Position, speed and torque control (With built-in linear positioning function)	General-purpose interface (pulse or analog voltage) (Di/Do) (Modbus-RTU)	Single-phase or 3-phase 200 to 240V	GYS, GYC motor 3000r/min	0.05kW	RYT1201	RYT500D5-VV2
					0.1kW	RYT1202	RYT101D5-VV2
					0.2kW	RYT1203	RYT201D5-VV2
					0.4kW	RYT1204	RYT401D5-VV2
					0.75kW	RYT1205	RYT751D5-VV2
			3-phase 200 to 240V		1.0kW	RYT1206	RYT102D5-VV2
					1.5kW	RYT1207	RYT152D5-VV2
					2.0kW	RYT1208	RYT202D5-VV2
					3.0kW	RYT1209	RYT302D5-VV2
					4.0kW	RYT1210	RYT402D5-VV2
					5.0kW	RYT1211	RYT502D5-VV2
			Single-phase 100V	GYS motor 3000r/min	0.05kW	RYT3251	RYT500D5-VV6
					0.1kW	RYT3252	RYT101D5-VV6
					0.2kW	RYT3253	RYT201D5-VV6
					0.375kW	RYT3254	RYT401D5-VV6
			Single-phase or 3-phase 200 to 240V	GYG motor 2000r/min	0.5kW	RYT1231	RYT501C5-VV2
					0.75kW	RYT1232	RYT751C5-VV2
			3-phase 200 to 240V		1.0kW	RYT1233	RYT102C5-VV2
					1.5kW	RYT1234	RYT152C5-VV2
					2.0kW	RYT1235	RYT202C5-VV2
			Single-phase or 3-phase 200 to 240V	GYG motor 1500r/min	0.5kW	RYT3261	RYT501B5-VV2
			3-phase 200 to 240V		0.85kW	RYT3262	RYT851B5-VV2
					1.3kW	RYT3263	RYT132B5-VV2
VS type	Position, speed and torque control	High speed serial bus (SX bus)	Single-phase or 3-phase 200 to 240V	GYS, GYC motor 3000r/min	0.05kW	RYT1001	RYT500D5-VS2
					0.1kW	RYT1002	RYT101D5-VS2
					0.2kW	RYT1003	RYT201D5-VS2
					0.4kW	RYT1004	RYT401D5-VS2
					0.75kW	RYT1005	RYT751D5-VS2
			3-phase 200 to 240V		1.0kW	RYT1006	RYT102D5-VS2
					1.5kW	RYT1007	RYT152D5-VS2
					2.0kW	RYT1008	RYT202D5-VS2
					3.0kW	RYT1009	RYT302D5-VS2
					4.0kW	RYT1010	RYT402D5-VS2
					5.0kW	RYT1011	RYT502D5-VS2
			Single-phase 100V	GYS motor 3000r/min	0.05kW	RYT3051	RYT500D5-VS6
					0.1kW	RYT3052	RYT101D5-VS6
					0.2kW	RYT3053	RYT201D5-VS6
					0.375kW	RYT3054	RYT401D5-VS6
			Single-phase or 3-phase 200 to 240V	GYG motor 2000r/min	0.5kW	RYT1031	RYT501C5-VS2
					0.75kW	RYT1032	RYT751C5-VS2
			3-phase 200 to 240V		1.0kW	RYT1033	RYT102C5-VS2
					1.5kW	RYT1034	RYT152C5-VS2
					2.0kW	RYT1035	RYT202C5-VS2
			Single-phase or 3-phase 200 to 240V	GYG motor 1500r/min	0.5kW	RYT3061	RYT501B5-VS2
			3-phase 200 to 240V		0.85kW	RYT3062	RYT851B5-VS2
					1.3kW	RYT3063	RYT132B5-VS2
LS type	Position control (With built-in linear positioning function)	High speed serial bus (SX bus)	Single-phase or 3-phase 200 to 240V	GYS, GYC motor 3000r/min	0.05kW	RYT3101	RYT500D5-LS2
					0.1kW	RYT3102	RYT101D5-LS2
					0.2kW	RYT3103	RYT201D5-LS2
					0.4kW	RYT3104	RYT401D5-LS2
					0.75kW	RYT3105	RYT751D5-LS2
			3-phase 200 to 240V		1.0kW	RYT3106	RYT102D5-LS2
					1.5kW	RYT3107	RYT152D5-LS2
					2.0kW	RYT3108	RYT202D5-LS2
					3.0kW	RYT3109	RYT302D5-LS2
					4.0kW	RYT3110	RYT402D5-LS2
					5.0kW	RYT3111	RYT502D5-LS2
			Single-phase 100V	GYS motor 3000r/min	0.05kW	RYT3151	RYT500D5-LS6
					0.1kW	RYT3152	RYT101D5-LS6
					0.2kW	RYT3153	RYT201D5-LS6
					0.375kW	RYT3154	RYT401D5-LS6
			Single-phase or 3-phase 200 to 240V	GYG motor 2000r/min	0.5kW	RYT3131	RYT501C5-LS2
					0.75kW	RYT3132	RYT751C5-LS2
			3-phase 200 to 240V		1.0kW	RYT3133	RYT102C5-LS2
					1.5kW	RYT3134	RYT152C5-LS2
					2.0kW	RYT3135	RYT202C5-LS2
			Single-phase or 3-phase 200 to 240V	GYG motor 1500r/min	0.5kW	RYT3161	RYT501B5-LS2
			3-phase 200 to 240V		0.85kW	RYT3162	RYT851B5-LS2
					1.3kW	RYT3163	RYT132B5-LS2

Model List

Servomotor

Specifications							Product code	Type
Model	Voltage	Rated speed	Oil seal/shaft	Encoder	Brake	Rated output		
GYS motor (ultra low inertia)	200V	3000r/min	Without an oil seal and a key (*1)	18-bit ABS/INC	Without a brake	0.05kW	GYS1301	GYS500D5-HB2
						0.1kW	GYS1302	GYS101D5-HB2
						0.2kW	GYS1303	GYS201D5-HB2
						0.4kW	GYS1304	GYS401D5-HB2
						0.75kW	GYS1305	GYS751D5-HB2
						1.0kW	GYS1306	GYS102D5-HB2
						1.5kW	GYS1307	GYS152D5-HB2
						2.0kW	GYS1308	GYS202D5-HB2
						3.0kW	GYS1309	GYS302D5-HB2
						4.0kW	GYS1310	GYS402D5-HB2
						5.0kW	GYS1311	GYS502D5-HB2
					With a brake	0.05kW	GYS1321	GYS500D5-HB2-B
						0.1kW	GYS1322	GYS101D5-HB2-B
						0.2kW	GYS1323	GYS201D5-HB2-B
						0.4kW	GYS1324	GYS401D5-HB2-B
						0.75kW	GYS1325	GYS751D5-HB2-B
						1.0kW	GYS1326	GYS102D5-HB2-B
						1.5kW	GYS1327	GYS152D5-HB2-B
						2.0kW	GYS1328	GYS202D5-HB2-B
						3.0kW	GYS1329	GYS302D5-HB2-B
						4.0kW	GYS1330	GYS402D5-HB2-B
						5.0kW	GYS1331	GYS502D5-HB2-B
				20-bit INC	Without a brake	0.05kW	GYS1341	GYS500D5-RB2
						0.1kW	GYS1342	GYS101D5-RB2
						0.2kW	GYS1343	GYS201D5-RB2
						0.4kW	GYS1344	GYS401D5-RB2
						0.75kW	GYS1345	GYS751D5-RB2
						1.0kW	GYS1346	GYS102D5-RB2
						1.5kW	GYS1347	GYS152D5-RB2
						2.0kW	GYS1348	GYS202D5-RB2
						3.0kW	GYS1349	GYS302D5-RB2
						4.0kW	GYS1350	GYS402D5-RB2
						5.0kW	GYS1351	GYS502D5-RB2
					With a brake	0.05kW	GYS1361	GYS500D5-RB2-B
						0.1kW	GYS1362	GYS101D5-RB2-B
						0.2kW	GYS1363	GYS201D5-RB2-B
						0.4kW	GYS1364	GYS401D5-RB2-B
						0.75kW	GYS1365	GYS751D5-RB2-B
						1.0kW	GYS1366	GYS102D5-RB2-B
						1.5kW	GYS1367	GYS152D5-RB2-B
						2.0kW	GYS1368	GYS202D5-RB2-B
						3.0kW	GYS1369	GYS302D5-RB2-B
						4.0kW	GYS1370	GYS402D5-RB2-B
						5.0kW	GYS1371	GYS502D5-RB2-B
	100V	3000r/min	Without an oil seal and a key (*1)	18-bit ABS/INC	Without a brake	0.05kW	GYS1601	GYS500D5-HB6
						0.1kW	GYS1602	GYS101D5-HB6
						0.2kW	GYS1603	GYS201D5-HB6
						0.375kW	GYS1604	GYS401D5-HB6
					With a brake	0.05kW	GYS1621	GYS500D5-HB6-B
						0.1kW	GYS1622	GYS101D5-HB6-B
						0.2kW	GYS1623	GYS201D5-HB6-B
						0.375kW	GYS1624	GYS401D5-HB6-B
				20-bit INC	Without a brake	0.05kW	GYS1641	GYS500D5-RB6
						0.1kW	GYS1642	GYS101D5-RB6
						0.2kW	GYS1643	GYS201D5-RB6
						0.375kW	GYS1644	GYS401D5-RB6
					With a brake	0.05kW	GYS1661	GYS500D5-RB6-B
						0.1kW	GYS1662	GYS101D5-RB6-B
						0.2kW	GYS1663	GYS201D5-RB6-B
						0.375kW	GYS1364	GYS401D5-RB6-B

*1: The motor with a shaft extension with a key and tapped is available as a semi-standard item. (See page 32 for shaft extension specifcations.)
The other specifications are handled as a made-to-order item.

Model List

Servomotor

Specifications							Product code	Type
Model	Voltage	Rated speed	Oil seal/shaft	Encoder	Brake	Rated output		
GYC motor (low inertia)	200V	3000r/min	Without an oil seal and a key (*1)	18-bit ABS/INC	Without a brake	0.1kW	GYC1301	GYC101D5-HB2
						0.2kW	GYC1302	GYC201D5-HB2
						0.4kW	GYC1303	GYC401D5-HB2
						0.75kW	GYC1304	GYC751D5-HB2
						1.0kW	GYC1305	GYC102D5-HB2
						1.5kW	GYC1306	GYC152D5-HB2
						2.0kW	GYC1307	GYC202D5-HB2
					With a brake	0.1kW	GYC1321	GYC101D5-HB2-B
						0.2kW	GYC1322	GYC201D5-HB2-B
						0.4kW	GYC1323	GYC401D5-HB2-B
						0.75kW	GYC1324	GYC751D5-HB2-B
						1.0kW	GYC1325	GYC102D5-HB2-B
						1.5kW	GYC1326	GYC152D5-HB2-B
						2.0kW	GYC1327	GYC202D5-HB2-B
				20-bit INC	Without a brake	0.1kW	GYC1341	GYC101D5-RB2
						0.2kW	GYC1342	GYC201D5-RB2
						0.4kW	GYC1343	GYC401D5-RB2
						0.75kW	GYC1344	GYC751D5-RB2
						1.0kW	GYC1345	GYC102D5-RB2
						1.5kW	GYC1346	GYC152D5-RB2
						2.0kW	GYC1347	GYC202D5-RB2
					With a brake	0.1kW	GYC1361	GYC101D5-RB2-B
						0.2kW	GYC1362	GYC201D5-RB2-B
						0.4kW	GYC1363	GYC401D5-RB2-B
						0.75kW	GYC1364	GYC751D5-RB2-B
						1.0kW	GYC1365	GYC102D5-RB2-B
						1.5kW	GYC1366	GYC152D5-RB2-B
						2.0kW	GYC1367	GYC202D5-RB2-B
GYG motor (medium inertia)	200V	2000r/min	Without an oil seal and a key (*1)	18-bit ABS/INC	Without a brake	0.5kW	GYG1301	GYG501C5-HB2
						0.75kW	GYG1302	GYG751C5-HB2
						1.0kW	GYG1303	GYG102C5-HB2
						1.5kW	GYG1304	GYG152C5-HB2
						2.0kW	GYG1305	GYG202C5-HB2
					With a brake	0.5kW	GYG1321	GYG501C5-HB2-B
						0.75kW	GYG1322	GYG751C5-HB2-B
						1.0kW	GYG1323	GYG102C5-HB2-B
						1.5kW	GYG1324	GYG152C5-HB2-B
						2.0kW	GYG1325	GYG202C5-HB2-B
				20-bit INC	Without a brake	0.5kW	GYG1401	GYG501C5-RB2
						0.75kW	GYG1402	GYG751C5-RB2
						1.0kW	GYG1403	GYG102C5-RB2
						1.5kW	GYG1404	GYG152C5-RB2
						2.0kW	GYG1405	GYG202C5-RB2
					With a brake	0.5kW	GYG1421	GYG501C5-RB2-B
						0.75kW	GYG1422	GYG751C5-RB2-B
						1.0kW	GYG1423	GYG102C5-RB2-B
						1.5kW	GYG1424	GYG152C5-RB2-B
						2.0kW	GYG1425	GYG202C5-RB2-B
GYG motor (medium inertia)	200V	1500r/min	Without an oil seal and a key (*1)	18-bit ABS/INC	Without a brake	0.5kW	GYG1501	GYG501B5-HB2
						0.85kW	GYG1502	GYG851B5-HB2
						1.3kW	GYG1503	GYG132B5-HB2
					With a brake	0.5kW	GYG1521	GYG501B5-HB2-B
						0.85kW	GYG1522	GYG851B5-HB2-B
						1.3kW	GYG1523	GYG132B5-HB2-B
				20-bit INC	Without a brake	0.5kW	GYG1601	GYG501B5-RB2
						0.85kW	GYG1602	GYG851B5-RB2
						1.3kW	GYG1603	GYG132B5-RB2
					With a brake	0.5kW	GYG1621	GYG501B5-RB2-B
						0.85kW	GYG1622	GYG851B5-RB2-B
						1.3kW	GYG1623	GYG132B5-RB2-B

*1: The motor with a shaft extension with a key and tapped is available as a semi-standard item. (See page 32 for shaft extension specifcations.)
The other specifications are handled as a made-to-order item.

Model List

Option

■Connector and cable

Name			Specifications		Product code	Type
For main circuit of amplifier	Power supply connector (for amplifier control power and main power supply)		0.05 to 1.5kW (to 1.0kW with GYG)	1 set	RYWS043	WSK-S05P-E
	DC circuit connector (wiring of external regenerative resistor, DC reactor, DC link circuit) *1		0.05 to 1.5kW (to 1.0kW with GYG)	1 set	RYWS044	WSK-R06P-E
	Motor power connector (wiring of main motor power)		0.05 to 1.5kW (to 1.0kW with GYG)	1 set	RYWS045	WSK-M03P-E
For sequence I/O (between host and amplifier)	Sequence I/O cable		All capacities	3m (bare wires on one side)	RYWS802	WSC-D36P03
	Sequence I/O connector kit *4		Amplifier side : All capacities	1 set	RYWS022	WSK-D36P
For encoder (between amplifier and motor)	Encoder cable		3000r/min for 0.05 to 0.75kW	2m (connector at both ends)	RYWS862	WSC-P06P02-E
				5m (connector at both ends)	RYWS863	WSC-P06P05-E
				10m (connector at both ends)	RYWS864	WSC-P06P10-E
				20m (connector at both ends)	RYWS865	WSC-P06P20-E
			3000r/min for 1.0 to 5.0kW 2000r/min for 0.5 to 2.0kW 1500r/min for 0.5 to 1.3kW	5m (connector at both ends)	RYWS806	WSC-P06P05-C
				10m (connector at both ends)	RYWS807	WSC-P06P10-C
				20m (connector at both ends)	RYWS808	WSC-P06P20-C
	Encoder connector kit *4		Amplifier side : All capacities	1 set	RYWS023	WSK-P06P-M
			Motor side : 0.05 to 0.75kW	1 set	RYWS036	WSK-P09P-D
			Motor side : 0.5 to 5.0kW	1 set	RYWS025	WSK-P06P-C
For motor power (between amplifier and motor)	Motor power cable	For main motor power *2	GYS, GYC : 0.05 to 0.75kW	2m (bare wires on one side)	RYWS868	WSC-M04P02-E
				5m (bare wires on one side)	RYWS869	WSC-M04P05-E
				10m (bare wires on one side)	RYWS870	WSC-M04P10-E
				20m (bare wires on one side)	RYWS871	WSC-M04P20-E
		For brake power *3	GYS, GYC : 0.05 to 0.75kW	2m (bare wires on one side)	RYWS874	WSC-M02P02-E
				5m (bare wires on one side)	RYWS875	WSC-M02P05-E
				10m (bare wires on one side)	RYWS876	WSC-M02P10-E
				20m (bare wires on one side)	RYWS877	WSC-M02P20-E
	Motor power connector kit	For main motor power *4	Motor side : 0.05 to 0.75kW	1 set	RYWS046	WSK-M04P-E
		For brake power *4	Motor side : 0.05 to 0.75kW	1 set	RYWS047	WSK-M02P-E
		For main motor power *4	Motor side : GYS 1.0 to 2.0kW GYG 0.5 to 2.0kW	1 set	RYWS027	WSK-M04P-CA
			Motor side : GYS 3.0 to 5.0kW GYC 1.0 to 2.0kW	1 set	RYWS031	WSK-M04P-CB
		For main motor power + brake power *4	Motor side : GYS 1.0 to 2.0kW GYG 0.5 to 2.0kW	1 set	RYWS029	WSK-M06P-CA
			Motor side : GYS 3.0 to 5.0kW GYC 1.0 to 2.0kW	1 set	RYWS032	WSK-M06P-CB
For SX bus	SX bus cable		For VS and LS type servo amplifiers	0.3m (connector at both ends)	NP1C001	NP1C-P3
				0.6m (connector at both ends)	NP1C002	NP1C-P6
				0.8m (connector at both ends)	NP1C003	NP1C-P8
				2m (connector at both ends)	NP1C004	NP1C-02
				5m (connector at both ends)	NP1C005	NP1C-05
				10m (connector at both ends)	NP1C006	NP1C-10
				15m (connector at both ends)	NP1C016	NP1C-15
				25m (connector at both ends)	NP1C007	NP1C-25

*1: One connector is included in the accessory of the main body of the servo amplifier.
*2: Use this cable with motor power connector (on amplifier side) WSK-M03P-E.
*3: Use this cable as a brake cable of the motor equipped with a brake.
*4: Use this connector when the customer fabricates a cable at arbitrary length.

■Common options

Specifications					Product code	Type
ABS backup battery	Set of battery and case (*With case)			1 set	RYWS007	WSB-SC
	Battery (*Discrete replacement battery)			1 piece	RYWS003	WSB-S
External regenerative resistor	200V	3000r/min for 0.05 to 0.4kW			RYWS010	WSR-401
		3000r/min for 0.75 to 1.5kW, 2000r/min for 0.5 to 1.0kW, 1500r/min for 0.5 to 0.85kW			RYWS012	WSR-152
		3000r/min for 2.0 to 3.0kW, 2000r/min 1.5 to 2.0kW, 1500r/min 1.3kW			RGWG339	DB11-2
		3000r/min for 4.0 to 5.0kW			RGWG342	DB22-2
	100V	3000r/min for 0.05 to 0.375kW			RYWS011	WSR-751
For PC loader connection	RS-232C - RS-485 conversion adaptor		For connection of RS-485 port of VV type servo amplifier *1	—	NW0H003	NW0H-CNV
	Cable			2m (connector at both ends)	RYWS005	WSC-PCL

*1: Prepare a marketed USB cable (A-B type) for the USB port.

Service Network

Fuji FA Service Centers

● Overseas Service Center
[Service Area: Far East Asia]
5-7, Nihonbashi
Odemma-cho, Chuo-ku, Tokyo, 103-0011, Japan
Phone: (03)5847-8072

● USA Service Center
[Service Area: USA, Canada, Central & South America]
5550 Cerritos Ave. Suite H Cypress, CA. 90630
USA
Phone: (714)220-1879

● CHICAGO Service Station
4825 N. Scott St. Suite 210, Schiller Park, IL 60176
USA
Phone: (847)233-9844

● EC Service Center
[Service Area: Europe, Middle East & Africa]
Goethering 58, 63067
Oftenbach/ Main Germany
Phone: (69)669029-0

● South East Asia & Oceania Service Center
[Service Area: SE & S Asia, Oceania]
171 Chin Swee Road, #12-01,
San Centre, Singapore 169877
Phone: (6481)5079

● FUJI-ELECTRIC TECHNOLOGY AND SERVICE (SHENZHEN) CO., LTD
[Service Area: China]
5F, Liming Bldg., No.144,
Zhongxing Rd., Luohu District, Shenzhen
Phone: (0755)8220-2745, 8218-4287

Contracted Service Companies

● **USA, Canada, Central & South America Area**
USA
OESS CORPORATION(Head Office:NEW JERSEY)

❶ NEW JERSEY
800 Huyler Street Teterboro, NJ 07608, USA
Phone: (201)288-4422

❷ CHICAGO
4825 N Scott Suite 210, Schiller park, IL 60176, USA
Phone: (847)233-9412

❸ LOS ANGELES
5550 Cerritos Ave. Suite H, Cypress, CA 90630
USA
Phone: (714)220-1879

❹ SAN JOSE
1440, Koll Circle, Suite 107, San Jose, CA 95112
USA
Phone: (408)437-1582

❺ PORTLAND
7921 SW Cirrus Drive, Beaverton, OR 97008, USA
Phone: (503)520-5044

● **Far East Asia Area**

❻ KOREA
GAIUS INDUSTRIES CO., LTD.
Cana Bldg., 10-59, Yangjae-Dong, Seocho-Gu,
Seoul, 137-887, R.O. KOREA
Phone: (02)3463-0766

❼ TAIWAN
ELTA Electrical Co., Ltd.
4F, No.32. Sec. 3, Cheng TehRoad,
Taipei, Taiwan
Phone: (02)2597-6458

❼ TAIWAN
Full Key International Technology Ltd
12F, No.111-8, HSING TEH RD., SAN-CHUNG CITY, TAIPEI, TAIWAN
Phone: (02)2995-2008

● **Europe, Middle East & Africa Area**

❽ F.R.GERMANY
OESS GmbH.
Senefelder Strasse 1, 63110 Rodgau,
F.R.GERMANY
Phone: (06106)285-7890

● **SE & S Asia, Oceania**

❾ SINGAPORE
Fuji Technical Center (S'pore) Pte Ltd.
Block 5000 Ang Mo kio Ave 5 #02-03 TechplaceII
SINGAPORE 569870
Phone: (6481)5079

❿ AUSTRALIA
CNC and ROBOTIC AUTOMATED SERVICES
Unit 33/16 Macquarie Place Boronia Victoria 3155,
AUSTRALIA
Phone: (03)9483-8629

⓫ INDIA
AUTONUM CONTROLS PVT LTD.
109, Sagar Building, Prabhat Industrial Estate,
W.E. Highway, Befor Check Naka, Dahisar-East,
Mumbai 400 068 INDIA
Phone: (022)28960027

To all our customers who purchase Fuji Electric products included in this catalog:

Please take the following items into consideration when placing your order.

When requesting an estimate and placing your orders for the products included in these materials, please be aware that any items such as specifications which are not specifically mentioned in the contract, catalog, specifications or other materials will be as mentioned below.
In addition, the products included in these materials are limited in the use they are put to and the place where they can be used, etc., and may require periodic inspection. Please confirm these points with your sales representative or directly with this company.
Furthermore, regarding purchased products and delivered products, we request that you take adequate consideration of the necessity of rapid receiving inspections and of product management and maintenance even before receiving your products.

1. Free of Charge Warranty Period and Warranty Range

1-1 Free of charge warranty period

(1) The product warranty period is "1 year from the date of purchase" or 24 months from the manufacturing date imprinted on the name place, whichever date is earlier.
(2) However, in cases where the use environment, conditions of use, use frequency and times used, etc., have an effect on product life, this warranty period may not apply.
(3) Furthermore, the warranty period for parts restored by Fuji Electric's Service Department is "6 months from the date that repairs are completed."

1-2 Warranty range

(1) In the event that breakdown occurs during the product's warranty period which is the responsibility of Fuji Electric, Fuji Electric will replace or repair the part of the product that has broken down free of charge at the place where the product was purchased or where it was delivered. However, if the following cases are applicable, the terms of this warranty may not apply.

1) The breakdown was caused by inappropriate conditions, environment, handling or use methods, etc. which are not specified in the catalog, operation manual, specifications or other relevant documents.
2) The breakdown was caused by the product other than the purchased or delivered Fuji's product.
3) The breakdown was caused by the product other than Fuji's product, such as the customer's equipment or software design, etc.
4) Concerning the Fuji's programmable products, the breakdown was caused by a program other than a program supplied by this company, or the results from using such a program.
5) The breakdown was caused by modifications or repairs affected by a party other than Fuji Electric.
6) The breakdown was caused by improper maintenance or replacement using consumables, etc. specified in the operation manual or catalog, etc.
7) The breakdown was caused by a chemical or technical problem that was not foreseen when making practical application of the product at the time it was purchased or delivered.
8) The product was not used in the manner the product was originally intended to be used.
9) The breakdown was caused by a reason which is not this company's responsibility, such as lightning or other disaster.

(2) Furthermore, the warranty specified herein shall be limited to the purchased or delivered product alone.
(3) The upper limit for the warranty range shall be as specified in item (1) above and any damages (damage to or loss of machinery or equipment, or lost profits from the same, etc.) consequent to or resulting from breakdown of the purchased or delivered product shall be excluded from coverage by this warranty.

1-3. Trouble diagnosis

As a rule, the customer is requested to carry out a preliminary trouble diagnosis. However, at the customer's request, this company or its service network can perform the trouble diagnosis on a chargeable basis. In this case, the customer is asked to assume the burden for charges levied in accordance with this company's fee schedule.

2. Exclusion of Liability for Loss of Opportunity, etc.

Regardless of whether a breakdown occurs during or after the free of charge warranty period, this company shall not be liable for any loss of opportunity, loss of profits, or damages arising from special circumstances, secondary damages, accident compensation to another company, or damages to products other than this company's products, whether foreseen or not by this company, which this company is not be responsible for causing.

3. Repair Period after Production Stop, Spare Parts Supply Period (Holding Period)

Concerning models (products) which have gone out of production, this company will perform repairs for a period of 7 years after production stop, counting from the month and year when the production stop occurs. In addition, we will continue to supply the spare parts required for repairs for a period of 7 years, counting from the month and year when the production stop occurs. However, if it is estimated that the life cycle of certain electronic and other parts is short and it will be difficult to procure or produce those parts, there may be cases where it is difficult to provide repairs or supply spare parts even within this 7-year period. For details, please confirm at our company's business office or our service office.

4. Transfer Rights

In the case of standard products which do not include settings or adjustments in an application program, the products shall be transported to and transferred to the customer and this company shall not be responsible for local adjustments or trial operation.

5. Service Contents

The cost of purchased and delivered products does not include the cost of dispatching engineers or service costs. Depending on the request, these can be discussed separately.

6. Applicable Scope of Service

Above contents shall be assumed to apply to transactions and use of the country where you purchased the products. Consult the local supplier or Fuji for the detail separately.

Reference Material

Motion controller
MICREX-SX Series SPH

Various CPUs matching your purposes are included in the line of products.
- Module type (Up to 64 axes control)
- PCI bus compatible board type (Up to 32 axes control)
- Selection of program language best for the control (LD, ST or FB language)

Catalog (LEH982)

Programmable operation display
UG Series POD

Various products ranging from 5.7" (QVGA) to 15" (XGA) types are included in the product line.
Full color (32,768 colors) realizes colorful and beautiful screen expression.

Catalog (LEH854)

⚠ SAFETY PRECAUTIONS

1. This catalog is intended for use in selecting required servo systems. Before actually using these products, carefully read their instruction manuals and understand their correct usage.
2. Products described in this catalog are neither designed nor manufactured for combined use with a system or equipment that will affect human lives.
   If you are considering using these products for special purposes, such as atomic energy control, aerospace, medical application, or traffic control, please consult our sales office.
3. If you use our product with equipment that is expected to cause serious injury or damage to your property in case of failure, be sure to take appropriate safety measures for the equipment.

The Inverter Value Engineering Center (Suzuka Area) has acquired environment management system ISO14001 and quality management system ISO9001 certifications.

JAB EMS Accreditation RE 009 | ISO 14001 JACO EC98J2011 EC97J1061 | UKAS ENVIRONMENTAL MANAGEMENT 051 | JAB QS Accreditation R009 | JQA ISO 9001:2000 JQA-0456 | UKAS QUALITY MANAGEMENT 091-A

Fuji Electric Systems Co., Ltd.

Gate City Ohsaki, East Tower, 11-2, Osaki 1-chome
Shinagawa-ku, Tokyo 141-0032, Japan
Phone: +81-3-5435-7283 Fax: +81-3-5435-7425

Printed on recycled paper

Information in this catalog is subject to change without notice.

Printed in Japan 2009-06 (F08c/K07) CM