# Portable Hot Oil Temperature Control Units

## Models Covered:
## TCO-C, COT-C, 2016C

Part Number: 882.12045.00
Bulletin Number: WTR2-645
Effective: August 1, 2012

an ACS Group company

Write Down Your Serial Numbers Here For Future Reference:

_____ _____

_____ _____

_____ _____

We are committed to a continuing program of product improvement.
Specifications, appearance, and dimensions described in this manual are subject to change without notice.

DCN No. _____

© Copyright 2012
All rights reserved.

# Safety Considerations

**⚠CAUTION**

Portable hot oil temperature control units are designed to provide safe and reliable operation when installed and operated within design specifications, following national and local safety codes.

To avoid possible personnel injury or equipment damage when installing, operating, or maintaining this equipment, use good judgment and follow these safe practices:

- ☑ Follow all **SAFETY CODES**.
- ☑ Wear **SAFETY GLASSES** and **WORK GLOVES**.
- ☑ Disconnect and/or lock out power before servicing or maintaining the hot oil temperature control unit.
- ☑ Use care when **LOADING**, **UNLOADING**, **RIGGING**, or **MOVING** this equipment.
- ☑ Operate this equipment within design specifications.

- ☑ **OPEN**, **TAG**, and **LOCK ALL DISCONNECTS** before working on equipment. You should remove the fuses and carry them with you.
- ☑ Make sure the hot oil temperature control unit and components are properly **GROUNDED** before you switch on power.
- ☑ Do not jump or bypass any electrical safety control.
- ☑ Do not restore power until you remove all tools, test equipment, etc., and the hot oil temperature control unit and related equipment are fully reassembled.
- ☑ Only **PROPERLY TRAINED** personnel familiar with the information in this manual should work on this equipment.

## Safety Symbols Used in this Manual

The following safety alert symbols are used to alert you to potential personal injury hazards. Obey all safety messages that follow these symbols to avoid possible injury or death.

**⚠DANGER** ***DANGER indicates an imminently hazardous situation that, if not avoided, will result in death or serious injury.***

**⚠WARNING** ***WARNING indicates a potentially hazardous situation or practice that, if not avoided, could result in death or serious injury.***

**⚠CAUTION** ***CAUTION indicates a potentially hazardous situation or practice that, if not avoided, may result in minor or moderate injury or in property damage.***

***Safety Tags and warning features***

| Hazard Alert Symbol | Description/Explanation | Preventative Maintenance |
|---|---|---|
| | High Voltage Hazard. The electrical enclosure is supplied with 3-phase electrical power. Use caution when using or maintaining this product. | Every six months inspect all electrical connections for secure attachment. For further information see the Maintenance Chapter in this manual |
| | Hot Surface Hazard. When the unit operates above 212F (100C) the surface of the unit may reach excessive temperatures. Use caution when using or maintaining this product. | Every six months inspect all surfaces for signs of heat degradation. If any appear remove panel and verify cause of degradation and repair. |
| | Pinch Point/Entanglement. The pump and motor are linked using v-groove belts. Use caution when using or maintaining this product. | Every month inspect the belt(s) for any type of wear. For further information see the Maintenance Chapter in this manual. |
| | | |
| Mandatory Symbol | Description/Explanation | |
| | Read Operators Manual. This equipment must be operated and maintained by properly trained personnel. The information contained within this manual must be read and understood prior to operating this equipment. | |
| | Lock Out. This equipment is operated with 3-phase electrical power. Therefore, when performing any maintenance operations we recommend following the local standards for performing a lock-out/tag-out procedure. | |
| | Wear Safety Gloves. This equipment operates above 212F (100C) and its surfaces may reach excessive temperatures. We recommend that technicians use safety gloves while performing maintenance to protect hands from being exposed to these hot surfaces. | |

# Table of Contents


## 1 General Information ..... 7

1-1 Introduction ..... 7
1-2 Necessary Documents ..... 7
1-3 Models Covered ..... 8
1-4 Standard Features ..... 8
1-5 Available Options ..... 9
1-6 Feature Descriptions ..... 9

## 2 Shipping Information ..... 16

2-1 Unpacking and Inspection ..... 16
2-2 In the Event of Shipping Damages ..... 16
2-3 If the Shipment is Not Complete ..... 17
2-4 If the Shipment is Not Correct ..... 17
2-5 Returns ..... 17

## 3 Installation ..... 19

3-1 Work Rules ..... 19
3-2 Installation Requirements ..... 19
3-3 Connecting Piping ..... 20
3-4 Making Electrical Connections ..... 24

## 4 Startup Preparations ..... 27

4-1 Starting the Unit ..... 27
4-2 Shutting Down the Unit ..... 29
4-3 Returning Fluid to the Tank ..... 30

## 5 Using Controls and Indicators ..... 33

5-1 The Microprocessor Controller ..... 33
5-2 Controller Display ..... 33
5-3 Using Controller Keys ..... 34
5-4 Identifying Control Panel Switches ..... 34

## 6 Preventive Maintenance ..... 37

6-1 Periodic Checks ..... 37
6-2 Routine Servicing ..... 38
6-3 Draining the Unit for Storage ..... 39
6-4 Corrective Maintenance ..... 39
6-5 Maintaining the Pump ..... 40

## 7 Troubleshooting ..... 54

# Charts and Figures

Figure 1 Portable Hot Oil Temperature Control Unit and Specifications ..... 15
Figure 2 Unit Piping Setup ..... 23
Figure 3 Typical Eurotherm 3216 Controller ..... 33
Figure 4 Control Panel Switches ..... 35
Figure 5 18-24 GPM Pump Contrustion 075-00370-02 ..... 41
Figure 6 Thrust Bearing Assembly ..... 42
Figure 7 Mechanical Seal Assembly ..... 44
Figure 8 Customer-Recommended Spare Parts ..... 50

# 1 General Information

## 1-1 Introduction

Your hot oil temperature control unit circulates thermal transfer-type oil through your process and to precisely, automatically, and reliably maintain it at a temperature you can select. The operating range of your temperature control unit is from 100°F to 400°F (38°C to 205°C). The unit is best suited for use with TrueTherm™ Heat Transfer Fluid. A recommended list of commercially available heat transfer fluids can be obtained through ACS GROUP Customer Service.

Rapid recirculation of the relatively small amount of fluid provides a close and uniform temperature relationship between the **TO PROCESS** and **FROM PROCESS** lines. This does, of course, depend on the configuration of your process, and any restrictions within the mold.

This recirculation, combined with the immersion heater and optional cooling capability, gives fast and accurate response to bring the fluid up to temperature, or to changes in the settings when needed.

Performance is assured through matching the unique ACS Group controllers to the ACS Group high temperature system. The two systems are fully integrated to achieve accurate control, along with efficient use of water and electricity.

## 1-2 Necessary Documents

The following documents are necessary for the safe installation, operation, and maintenance of your hot oil portable temperature control unit. You can obtain additional copies from ACS Group. Make sure that appropriate personnel are familiar with these documents:

- ☑ This manual.
- ☑ The electrical schematic and connection diagram in the control enclosure.
- ☑ The manuals for accessories and options you've selected.
- ☑ The customer parts list in the control enclosure.

## 1-3 Models Covered

This manual lists installation, operation, and maintenance instructions for the hot oil portable temperature control unit.

Model numbers are listed on the serial tag. A model number followed by **-Q** indicates a specially constructed unit, and not all information in this manual may apply. Make sure that you know the model number, serial number, and operating voltage of your unit if you contact ACS Group.

## 1-4 Standard Features

- Off-the-shelf microprocessor-based PID temperature controller with Process and Set Point LED readouts
- Non-fused lockable rotary disconnect
- Dual stage immersion heater with IEC contactors
- 400ºF (205ºC) maximum operating temperature
- Branch fusing
- System status graphic display
- Pressure switch for low pump pressure shut-down
- NEMA 12 electrical enclosure
- UL listed subpanel
- To Process pressure gauge
- Independent safety thermostat
- Automatic venting sequence
- Positive displacement pumps capable of reversing to evacuate the process
- Low level alarm for reservoir
- Easily removable panels for quick access to internal components
- Audible alarm

# 1-5 Available Options

- Drain valve
- Hour meter; measures total pump run time hours
- General fault visual alarm
- Auto-vent sequence; deducts available
- Low level alarm; deducts available
- High level indicator light
- Manual bypass
- DIN controller with:
  - 4-20 mA current control output
  - RS-232 or RS-485 communications
  - Remote sensor; 10 ft. (3 m)
- Y-strainer on From Process line (external to unit)
- Remote controller
- Lexan cover
- Optional operating voltages of 208/3/60, 230/3/60, 575/3/60, 380/3/50, and 415/3/50

# 1-6 Feature Descriptions

### Immersion Heaters

The fluid is heated by the specially designed three-phase low watt density electrical immersion heater, and regulated by the controller. The standard heater has a steel sheath for low watt density and good heat transfer.

These models are supplied with a 6 kW low watt density immersion heater.

### Heater Tank

The hot oil unit features a single pass heater tank. The tank is designed to maintain an optimum balance of fluid velocity versus watt density, and turbulence for excellent heat transfer, and minimal pressure drop. The high fluid velocity will greatly prolong the life of the heater and fluid.

## Pump

The pump is a mechanical seal, positive displacement pump. It features a nearly maintenance free design, and was selected after extensive testing to provide superior performance, flexibility and low maintenance. It is well suited for use with a variety of commercially available heat transfer fluids. The pump has only two internal moving parts, and a specially designed seal to give years of trouble free service, even at high temperatures. The only routine maintenance required is the monthly greasing and occasional head space adjustment; see Section 6-5 on Page 40 for more information.

The pump is capable of running in either direction. Thus, the pump reverse feature can be used to draw fluids back from the process. It is not necessary to install a service air line to purge the lines before changing molds. Since the pump is capable of achieving extremely high pressures, it is necessary to regulate the pressure through use of a regulating by-pass line (Ful-Flo valve). Because the pump is a positive displacement pump, it will supply the process with rated flow at or below the rated pressure.

The flow is constant until the pressure reaches the rated pressure. The pressure, however, is a function of frictional losses through the process to which it is attached. Systems with large process connections, ports, and piping will operate at low pressures; while systems with small process connections, ports, and piping will operate at higher pressures. Once the pressure requirements exceed the rated pressure, the Ful-Flo valve will open and bypass the necessary fluid to prevent high pressures.

## Ful-Flo Valve

A regulating by-pass line featuring a Ful-Flo valve is standard in all units. This is a safety device to prevent excessive pressure in the event that the delivery line is obstructed. Each Ful-Flo is factory preset to limit system pressure as specified by the customer. It must not be tampered with in any way.
In the event of an obstruction in the line, the Ful-Flo will open and divert fluid from the delivery **TO PROCESS** line to the return From Process line. A constant flow of fluid is maintained through the heater tank to prevent damage to the heating elements and fluid.

## Cooling

The designed shell and tube heat exchanger is provided as optional equipment in this unit. The design features straight-tube construction and copper-nickel tubes for durability and optimal heat transfer.

The modular construction (unique to ACS Group units) allows the tube bundle to be easily removed for periodic cleaning. Additionally, check valves are installed on the water supply and drain lines to prevent water from back flowing into the heat exchanger from a closed drain or into the water supply piping.

The controller automatically regulates cooling by opening and closing the cooling solenoid. This allows the proper amount of cooling water to pass through the tubes of the heat exchanger and out the drain. A water supply of 75 psi (517.1 kPa/5.2 bars) maximum is required for connection to the heat exchanger.

### Connection Lines

Connections for **TO PROCESS** and **FROM PROCESS** lines are ½" NPT (12.5 mm). Water connections for **COOLING WATER SUPPLY** and **COOLING WATER DRAIN** are ½" NPT (12.5 mm). (see Section 3.) ***The customer is responsible for conversions to metric standards.***

ACS Group stocks many lengths of flexible metal hose; the part number is 572-16969. State the length of hose you want when ordering.

**⚠WARNING**

**Component failure may result in high-temperature oil spray, causing serious injury or death.**

**Make sure hoses, valves, and other components installed in your process can withstand maximum temperature and pressure of the hot oil unit; check unit nameplate for specific capacities.**

**All components must be carefully inspected for condition before installing. Make sure you have factory components if you have any doubt.**

## Electrical System Controls

The electrical controls of your hot oil unit are specially engineered for reliability, safety and simplicity of operation. The switches are clearly labeled as to their function. Your hot oil unit has a system status board so you can evaluate the status and performance of the unit at a glance. Pilot lights are provided to indicate key unit functions.

An audible alarm is standard with your unit. The alarm will sound in the event of the following conditions:

- motor overload
- safety thermostat trip (over temperature)
- low fluid pressure
- low fluid level
- high fluid level (optional)

Push the **ALARM SILENCE** button to silence the alarm. See Section 5 on page 33 for more information on control functions.

## Electrical Panel and System Components

The pump motor and immersion heater operate on three-phase, 50/60 cycle, nominal voltage with the control circuit at 115 V single phase. The control circuit voltage is provided by a single phase machine tool transformer with primary fuse protection and a grounded secondary. A main power disconnect is included as for ease of service. The electrical panel is UL listed and complies with N.F.P.A. 79 provisions.

All components are IEC rated for long life and reduced maintenance. The heater elements are branch fused, and protected from contactor welding by a separate primary voltage contactor. The pump motor is controlled by a full voltage magnetic reversing starter, with fused branch circuit overcurrent and thermal overload protection. Many additional features are available as options.

A NEMA 12 enclosure is standard, with NEMA 4 available as an option.

## Air Purge

Upon initial start-up and mold/process change-out, you'll need to purge all air and water from the system. The hot oil unit has appropriate valving to ensure complete purging; procedures are covered in Section 4 on Page 27.

**⚠WARNING**

**Failure to purge the system of air before heating may result in serious injury or critical system and equipment damage.**

**Make sure you properly purge the system of air *before* starting the heater cycle.**

## Pressure Switch

A pressure switch is built into each unit to guard against heater damage. This feature prevents the heater elements from being energized unless the pump is running and fluid is in the system. After a preset time, the pump shuts down if the fluid pressure is not re-established. The pressure switch is preset at the factory; **do not tamper with it**.

## Safety Thermostat

The safety thermostat is a J-Thermocouple sensing, adjustable, fail-safe device located in the heater tank. This is to guard against the unlikely event of "runaway" heating. If overheating does occur, the safety thermostat shuts down the heater outputs and sounds an audible alarm. A red pilot light on the status board also illuminates. The unit continues to pump fluid through the system to prevent heater damage. Auxiliary factory installed alarms such as beacons and klaxons are available as options.

All controller functions are locked out until the main supply power is disconnected. Resetting the alarm condition is initiated by depressing the red pump stop button. The reset button is located inside the electrical enclosure, mounted on the left wall of the enclosure. It is imperative that a qualified maintenance technician

determine and correct the cause of the fault **before** resuming operation.

## Reservoir Tank

A reservoir tank with sight gauge is standard; usable capacity is one (2) gallon (7.6 liters). The tank permits thermal expansion of the heat transfer fluid, and provides make-up fluid.

**⚠WARNING**

**The reservoir tank may cause serious injury if it ruptures from not being properly vented.**

**Make sure that the reservoir tank is always properly vented to prevent tank rupture.**

The reservoir tank drain is extended beyond the base of the unit for ease of draining. Optional ball valves are available to further simplify draining.

Figure 1
Hot Oil Portable Temperature Control Unit

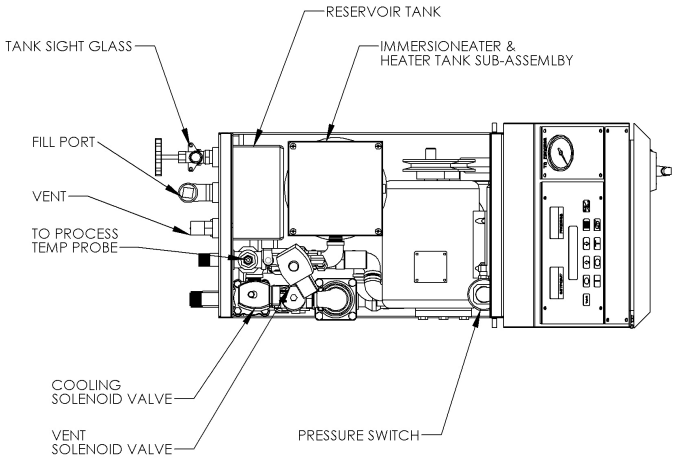


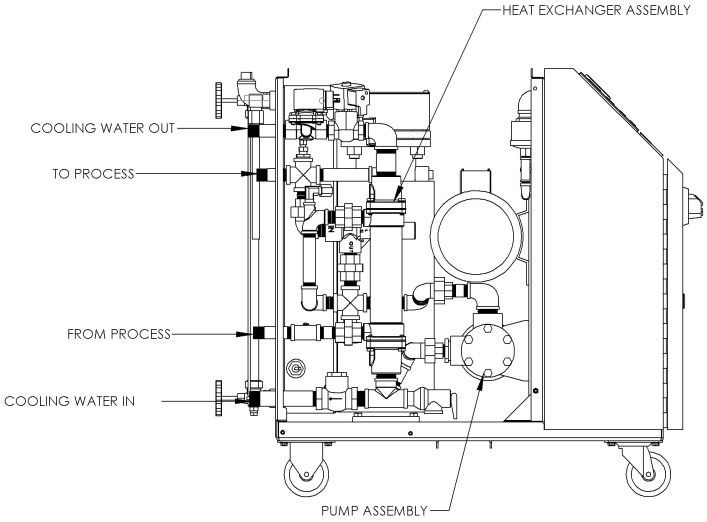


Temperature Control Unit Specifications

| Model Number 460 / 230 | Heater 6 kW | Pump Power hp | Pump Power kW | Pump Pressure PSI | Pump Pressure Bar | Pump Flow gpm | Pump Flow lpm | Dimensions H in. | Dimensions H cm | Dimensions W in. | Dimensions W cm | Dimensions D in. | Dimensions D cm | Shipping Weight lbs. | Shipping Weight Kg |
|---|---|---|---|---|---|---|---|---|---|---|---|---|---|---|---|
| TCO-C, COT-C, 2016C | Std. | 0.75 | 0.56 | 50 | 3.45 | 6 | 22.8 | 28 | 71 | 13 | 33 | 31 | 79 | 265 | 120 |

# 2 Shipping Information

## 2-1 Unpacking and Inspection

You should inspect your hot oil portable temperature control unit for possible shipping damage. If the container and packing materials are in re-usable condition, save them for reshipment if necessary.

Thoroughly check the equipment for any damage that might have occurred in transit, such as broken or loose wiring and components, loose hardware and mounting screws, etc. In case of breakage, damage, shortage, or incorrect shipment, refer to the following sections.

## 2-2 In the Event of Shipping Damages

**⚠CAUTION**

**According to the contract terms and conditions of the Carrier, the responsibility of the Shipper ends at the time and place of shipment.**

- ☑ Notify the transportation company's local agent if you discover damage.
- ☑ Hold the damaged goods and packing material for the examining agent's inspection. **Do not return any goods to ACS Group before the transportation company inspection and authorization**.
- ☑ File a claim against the transportation company. Substantiate the claim by referring to the agent's report. A certified copy of our invoice is available upon request. The original Bill of Lading is attached to our original invoice. If the shipment was prepaid, write us for a receipted transportation bill.
- ☑ Advise ACS Group regarding your wish for assistance and to obtain an RMA (return material authorization) number.

## 2-3 If the Shipment is Not Complete

Check the packing list. The apparent shortage may be intentional. Back-ordered items are noted on the packing list. You should have:

- ☑ hot oil portable temperature control unit
- ☑ Bill of lading
- ☑ Packing list
- ☑ Operating and Installation packet
- ☑ Electrical schematic and panel layout drawings
- ☑ Component instruction manuals

Re-inspect the container and packing material to see if you missed any smaller items during unpacking. Determine that the item was not inadvertently taken from the area before you checked in the shipment. Notify ACS Group immediately of the shortage.

## 2-4 If the Shipment is Not Correct

If the shipment is not what you ordered, **contact the shipping department immediately**. For immediate assistance, please contact the correct facility located in the technical assistance section of this manual. Have the order number and item number available. *Hold the items until you receive shipping instructions*.

## 2-5 Returns

Do not return any damaged or incorrect items until you receive shipping instructions from the shipping department.

### *Credit Returns*

Prior to the return of any material, **authorization** must be given by **the manufacturer.** A RMA number will be assigned for the equipment to be returned.
Reason for requesting the return must be given.
ALL returned material purchased from **the manufacturer** returned is subject to 15% ($75.00 minimum) restocking charge.
ALL returns are to be shipped prepaid.
The invoice number and date or purchase order number and date must be supplied.
No credit will be issued for material that is not within the manufacturer's warranty period and/or in new and unused condition, suitable for resale.

### *Warranty Returns*

Prior to the return of any material, authorization must be given by **the manufacturer.** A RMA number will be assigned for the equipment to be returned.
Reason for requesting the return must be given.
All returns are to be shipped prepaid.
The invoice number and date or purchase order number and date must be supplied.
After inspecting the material, a replacement or credit will be given at **the manufacturer's** discretion. If the item is found to be defective in materials or workmanship, and it was manufactured by our company**,** purchased components are covered under their specific warranty terms.

# 3 Installation

## 3-1 Work Rules

The installation, operation and maintenance of this equipment must be conducted in accordance with all applicable work and safety codes for the installation location. This may include, but is not limited to OSHA, NEC, CSA, and any other local, national and international regulations.

- Read and follow these instructions when installing, operating and maintaining this equipment. If the instructions become damaged or unreadable, obtain additional copies from ACS GROUP.
- Only qualified personnel familiar with this equipment should work on or with this hot oil temperature control unit.
- Work with approved tools and devices.
- Disconnect the electricity **before** maintenance or service. If the unit is installed with a power cord that can be unplugged, unplug it. If the unit is permanently wired to a power main, make sure that a fused power disconnect is installed to allow the disconnect to be locked in the **OFF** position. Open and lock out the disconnect installed in the control enclosure.

## 3-2 Installation Requirements

Make sure that you meet the following requirements when installing and operating your hot oil temperature control unit.

### Installation Location Considerations

Locate the hot oil unit as close as possible to the process for proper circulation and temperature control. Take care when selecting a location. The area surrounding the unit must be free of obstructions to ensure proper ventilation of internal components. **Allow a minimum clearance of at least 30 inches (76 cm).**

Make sure that the unit location is not in a confined space to ensure proper air circulation. Vapors can escape from areas such as the reservoir tank during high temperature operation.

**⚠CAUTION**

**Harmful vapors may be generated from thermal fluid during high temperature operation.**

**Prolonged or repeated exposure of these hot-generated vapors may result in eye and respiratory tract irritation.**

**Avoid contact or inhaling harmful amounts of material. Consult the Material Safety Data Sheet (MSDS) for precautions and instructions for the thermal fluid you are using.**

**NOTICE**

Before storing your temperature control unit, make sure you remove all residual water with compressed air to avoid a potential freezing hazard. See Section 6-3 on Page 39 for more information.

Note the following table of ambient temperature ranges permitted for storage and operation:

| Ambient storage range | | Ambient operation range | |
|---|---|---|---|
| ºF | ºC | ºF | ºC |
| -40ºF to 185ºF | -40ºC to 85ºC | -4ºF to 120ºF | -20ºC to 49ºC |

You should preheat the process heat transfer fluid first if you want to start the unit below an ambient temperature of 30ºF (-1ºC).

## 3-3 Connecting Piping

Make sure that all external piping is properly sized to reduce external pressure drop as much as possible. Do not install process or water supply/drain piping smaller than the fittings on the unit. If the water supply piping is larger than unit fittings, reduce the pipe size at the unit.

The following table lists pipe sizes.

| Connection | Size diameter | |
|---|---|---|
| | inches NPT | mm (approx.) ① |
| To Process | 0.5” NPT | 12.5 mm |
| From Process | 0.5” NPT | 12.5 mm |
| Cooling Water Supply | 0.5” NPT | 12.5 mm |
| Cooling Water Drain | 0.5” NPT | 12.5 mm |
| Oil Drain | 0.5” NPT | 12.5 mm |
| Fill Port | 0.5” NPT | 12.5 mm |

① Customer is responsible for converting to metric.

**NOTICE**

Always use a backup wrench to support the unit piping when making connections. Make sure all external piping is supported **independently** of the unit.

ACS Group recommends that you have strainers installed on the cooling water inlets and customer-supplied shut-off valves on all piping connections. Use common black welded pipe for permanent installations.

The unit is designed to operate with an open, unrestricted drain line. Steam rapidly expands within the heat exchanger, so any overpressure condition from backpressure or standing columns of water against the drain **must be avoided**.

If you must use a pipe joint compound, use a compound that can withstand the high temperatures and pressures of your unit. Always insulate all piping to prevent burn hazards and to retain heat. Make sure insulation is properly rated for maximum operating temperatures of your unit.

## Piping Considerations for Mobile Installations

Because your unit is fitted with casters, its portability is well suited for multiple applications. You can purchase high-quality flexible metal hose from ACS Group to enhance the mobility of your unit; state the length you want when ordering.

Although they cause a drop in pressure, you can also install quick disconnects to your unit. However, do **not** install check valves with quick disconnects unless *absolutely necessary!*

## Connecting Process Piping

**⚠CAUTION**

- **Hoses, valves and other components in your process must be able to withstand unit maximum temperatures and pressures.**
- **Maximum temperatures and pressures are listed on the unit nameplate.**
- **Carefully inspect all components before installation.**
- **If in doubt about component suitability, obtain factory components.**
- **Fix all leaks! Fluid can be a potential fire and slip hazard.**

## Connecting Cooling Water Piping

You must provide cooling water at 25 psi to 75 psi (172.4 kPa to 517.1 kPa/1.7 bars to 5.2 bars) for proper operation. Untreated water can foul or corrode the heat transfer surfaces, slowing water flow and causing fluid temperature control problems. ACS Group. sells a complete line of water treatment equipment that can reduce downtime and maintenance costs.

Install properly-sized cooling water lines – never smaller than the outlets on the unit. If external piping is larger than the unit connections, reduce the size of the piping at the unit.

## Connecting Vent Piping

**You must leave the vent connection open to the atmosphere at all times.** The vent connection is located on top of the reservoir and on the back of the unit. On systems with piping above the reservoir level, you **must** run vent piping to a minimum height of one foot (1’ / 31 cm) above the highest point in the system. Run the piping down into an auxiliary vented overflow chamber, such as a vented, *covered* 55-gallon (208-liter) drum. This practice ensures that overflow will not create a hazard to personnel.

**Remember:** All external piping must be supported independently of the unit.

**⚠CAUTION**

**The reservoir tank must be vented to prevent pressurization. A pressurized reservoir could rupture, allowing hot fluid to escape and become a potential fire and slip hazard.**

**NOTICE**

Heat transfer fluids expand when heated. Expansion rates vary, depending on fluid types and temperatures. For more information on expansion rates, refer to specification information for the heat transfer fluid you select.

Generally, most heat transfer fluids expand at the rate of 2.5% for every increase of 50°F/°C from temperatures above 60°F (16°C).

**Figure 2**
Unit Piping Setup

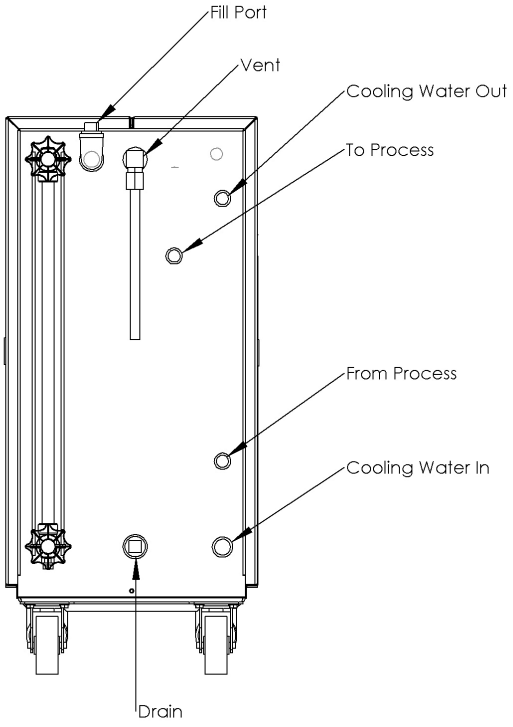


Connect the **TO PROCESS** hookup to the entrance of the process and the **FROM PROCESS** hookup to the exit of the process. Connect the **COOLING WATER SUPPLY** to your plant water supply. Connect the **COOLING WATER DRAIN** line to an open drain, or to the return line of your central water system. If returning to a central water system, use a condensate/return tank to avoid a standing water column on the heat exchanger drain line.

**⚠CAUTION**

**If you are routing the drain line to an open drain, make sure that the line is directed away from personnel to avoid scalding.**

**Carefully select connecting lines and connectors between the unit and the process to best meet the needs and requirements of your application.**

**Make sure lines and connectors have a service rating of at least 100 psig (689.5 kPa/6.9 bars), and a temperature rating at least equal to the maximum operating temperature of your unit.**

**NOTICE**

To prevent debris from fouling reservoir fluid, the unit is equipped with an internal vent on the reservoir tank. Use the plug provided to close off the external fill port after filling the unit with heat transfer fluid.

## 3-4 Making Electrical Connections

These units are designed for three-phase voltage operation. Refer to the unit nameplate for proper voltage and amperage requirements, and make sure your electrical service conforms.

**⚠CAUTION**

1. **Provide a correctly sized and protected power supply to the unit.**
2. **If an electrical supply disconnect is not installed as a factory option, the customer is responsible to properly size and install a suitable disconnect.**
3. **Refer to National Electric Code (NEC) 430-24-26 for proper feed conductor and supply disconnect sizing.**
4. **Voltages must be within plus or minus ten percent (±10%) of the nameplate rating.**
5. **Maintain a safe ground and disconnect the power supply before servicing the unit.**

**A qualified electrician should make electrical connections and disconnect the electricity when service calls are needed.**

- Locate disconnects in an **easily accessible location.** Operators should not have to squeeze around the unit to reach disconnects, especially in case of emergency.
- When running conduit whips to the unit, make sure that whips are routed away from hot piping.

**Check the unit nameplate for correct voltage and amperage *before* making electrical connections!**

**⚠ DANGER**

**Improper electrical connections can damage the unit and cause serious operator injury or death!**

**Make sure that all electrical connections are made by a qualified electrician, and that all connections are *tight*.**

Make all electrical supply connections at the front of the unit. An access panel covers all electrical connections. Run electrical connections to the supply terminals from either side of the unit. Make sure that all three phases are wired correctly. *The pump runs backwards if not wired properly.*

***- Notes -***

## 4-1 Starting the Unit

### Unit Start-up (With Autovent Solenoid)

The highly engineered controls and controller make this unit almost self operating. Before you can begin heating, it will be necessary to perform the following start up procedures. This will ensure that all air is vented from the system to prevent fluid degradation and damage to the heater.

1. Add fluid to the reservoir tank until the level is near the top of the sight glass.

2. Turn the **Pump Rev|Off|Fwd** switch to **Fwd** to start the pump. Check motor rotation by observing the pressure gauge. If the gauge indicates positive pressure, rotation is correct. If not, disconnect power and reverse the incoming power leads.

3. As fluid is drawn out of the reservoir tank to fill the process, the fluid level will fall in the tank. Continue to add fluid to maintain the level about 4 inches from the bottom of the sight glass.

4. Air and Oil will be vented through the Vent Solenoid and into the reservoir tank.

**⚠CAUTION**

**You must purge the system of air before the heating cycle.**
**Personal injury and system damage can occur from a pressurized system.**

5. Two minutes after the unit has built at least 5psi of pressure, select a set point of 100°F and switch unit into the "Auto" mode. As the oil warms up, viscosity will decrease, and the pressure will fall.

6. With 2 minute intervals increase the setpoint to 150 and 200°F.

7. If any water is present in the system, it must be boiled off before continuing operation. Select a setpoint of 215ºF (102ºC) and observe the reservoir tank vent for any signs of escaping steam. Continue to run at 215ºF until no more steam appears and pressure has stabilized.

8. When fluid level has stabilized and air and water is purged from the system, allow the vent timer to run out.

### Unit Start-up (With Manual Vent Valve)

The highly engineered controls and controller make this unit almost self operating. Before you can begin heating, it will be necessary to perform the following start up procedures. This will ensure that all air is vented from the system to prevent fluid degradation and damage to the heater.

1. Add fluid to the reservoir tank until the level is near the top of the sight glass.

2. Open the Vent Valve on the back of the unit.

3. Turn the **Pump Rev|Off|Fwd** switch to **Fwd** to start the pump. Check motor rotation by observing the pressure gauge. If the gauge indicates positive pressure, rotation is correct. If not, disconnect power and reverse the incoming power leads.

4. As fluid is drawn out of the reservoir tank to fill the process, the fluid level will fall in the tank. Continue to add fluid to maintain the level about 4 inches from the bottom of the sight glass.

**⚠CAUTION**

**You must purge the system of air before the heating cycle.**
**Personal injury and system damage can occur from a pressurized system.**

5. Air and Oil will be vented through the Vent Valve and into the reservoir tank.

6. Two minutes after the unit has built at least 5psi of pressure, select a set point of 100°F and switch unit into the "Auto" mode. As the oil warms up, viscosity will decrease, and the pressure will fall.

7. With 2 minute intervals, increase the setpoint to 150 and 200 °F.

8. If any water is present in the system, it must be boiled off before continuing operation. Select a setpoint of 215ºF (102ºC) and observe the reservoir tank vent for any signs of escaping steam. Continue to run at 215ºF (102ºC) until no more steam appears and pressure has stabilized.

9. When fluid level has stabilized and air and water is purged from the system, close the Vent Valve. Do not open the Vent Valve above 250°F.

With the system properly purged, only 4 - 6" of fluid should be visible in the sight glass. This will allow for expansion of the fluid as it heats, as well as capacity for process fluid when the pump is reversed and fluid withdrawn from the mold.

The unit is now ready for use. All that is required is to select a process set point on the controller as described in the controller manual.

**NOTICE**

If all traces of water are not removed from the system, severe cavitation may occur at elevated temperatures. Indications are a “gravely” sounding pump, fluctuating or dropping pressure, or rapidly rising fluid level in the expansion tank. Repeat Step #7 if any of this occurs.

## 4-2 Shutting Down the Unit

### Unit Shut Down (With Autovent Solenoid or Manual Vent Valve)

Cool the unit down by switching the **Mode** switch to the "Manual Cool" position. This will disable the heaters (i.e. prevent the controller from turning them on) and open the cool solenoid, if equipped with optional heat exchanger. Fluid temperature can be monitored on the controller display during cool down. When fluid temperature is below 120ºF, Turn the **Pump Rev|Off|Fwd** switch to **Off** to turn the unit off.

# 4-3 Returning Fluid to the Tank

### Returning Fluid to Tank (With Autovent Solenoid)

If the unit is to be moved from one process to another (i.e. mold changes, etc.), the following steps must be taken to drain the mold and process lines. Note that this is just the opposite of unit start up/air purge:

1. Cool fluid to 100 degrees °F maximum.
2. Turn the **Pump Rev|Off|Fwd** switch to **Off**.
3. Turn the **Pump Rev|Off|Fwd** switch to **Rev**. The pump will then run in reverse, drawing fluid from the mold and lines, and into the reservoir tank.
4. Watch the sight glass to prevent overflow of the reservoir tank.

**⚠CAUTION**

**The reservoir tank may not have adequate volume to contain the total system capacity of fluid.**

**An overflowing reservoir allows hot fluid to escape and become a potential fire and slip hazard.**

**The total capacity of the tank is 7 gallons (26.5 liters).**

If it appears that the tank may overfill, connect a line from the **FILL** port of the reservoir tank to a **clean** auxiliary container.

## Returning Fluid To Tank (With Manual Vent Valve)

If the unit is to be moved from one process to another (i.e. mold changes, etc.), the following steps must be taken to drain the mold and process lines. Note that this is just the opposite of unit start up/air purge:

1. Cool fluid to 100 degrees °F maximum.

2. Open the Vent Valve to allow in fresh air into the pipes.

3. Turn the **Pump Rev|Off|Fwd** switch to **Off**.

4. Turn the **Pump Rev|Off|Fwd** switch to **Rev**. The pump will then run in reverse, drawing fluid from the mold and lines, and into the reservoir tank.

5. Watch the sight glass to prevent overflow of the reservoir tank.

If it appears that the tank may overfill, connect a line from the **FILL** port of the reservoir tank to a **clean** auxiliary container.

## *- Notes -*

# 5 Using Controls and Indicators

## 5-1 The Microprocessor Controller

The controller is an easy-to-operate microprocessor-based PID control device. When the process reaches the set point, the controller cycles the cooling valve or the immersion heater to maintain the proper To Process temperature.

The controller has been fully factory tested. Set the desired process temperature set point and the control does the rest.

Built-in range of operation on the controller is 0°F to 400°F (-18ºC to 205ºC).

## 5-2 Controller Display

**Figure 3**
Typical 3216
Microprocessor Controller

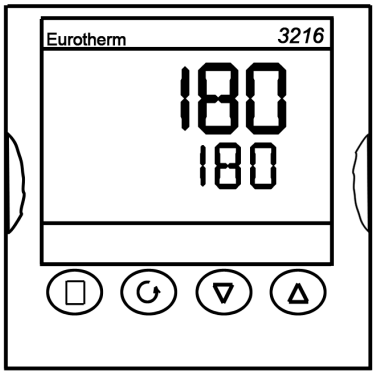


### See Figure 3

#### Measured Temperature Value Numeric LED

During normal operation, the large green **PV** Process Value LED on the controller displays the actual process temperature at the To Process thermocouple. It also lists parameter symbols during setup and error messages if an error occurs.

#### Required Temperature Numeric LED

During normal operation, the smaller green **SP** Set Value LED on the controller displays the process set point you want the chiller to maintain. It also displays parameter and pre-set function values during setup.

# 5-3 Using Controller Keys

## See Figure 3

### Page Key

From any display – press to return to the HOME display.

### Scroll Key

Press to select a new parameter. If held down it will continuously scroll through the parameters.

**⚠CAUTION**

**Do not change any of the control settings without consulting the Service Department.**

***The ACS Group warranty does not cover temperature control unit failures from tampering with controller settings*!**

### Down Key

Each press of the **Down Arrow** key decrements or reduces the values or settings on the **SV** Set Value display.

### Up Key

Each press of the **Up Arrow** key increments or advances the values or settings on the **SV** Set Value display.

# 5-4 Identifying Control Panel Switches

This section lists the descriptions and functions of the control panel switches. These switches control the operation of the unit.

**Figure 4**
Control Panel Switches

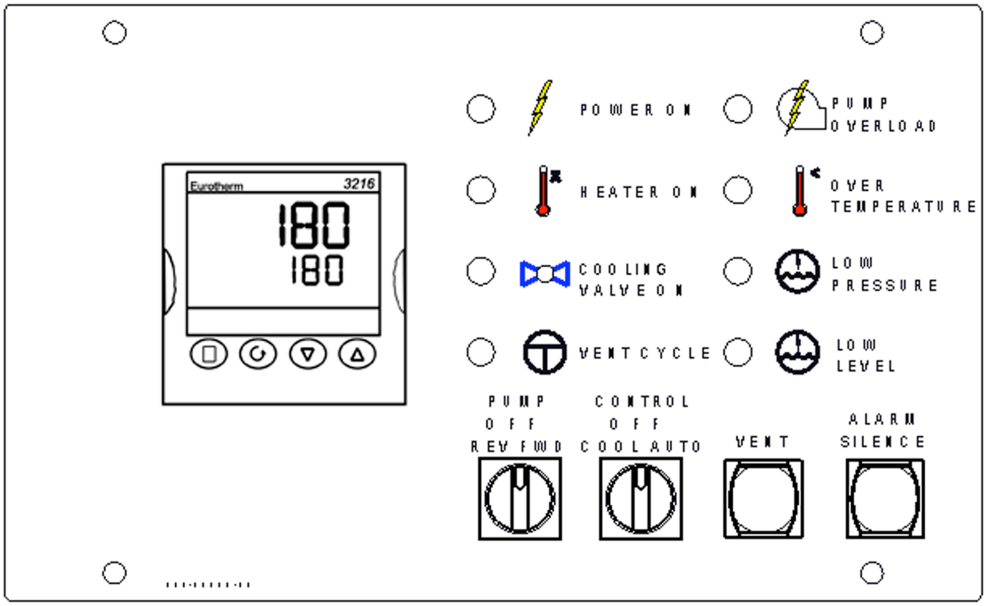


## Pump Rev|Off|Fwd

Turn the **Pump Rev|Off|Fwd** switch to **Fwd** to start the pump in the normal forward direction.

Turn the **Pump Rev|Off|Fwd** switch to **Off** to stop the pump and de-energize the controller.

**⚠CAUTION**

**Always turn to Pump Off and allow the pump to come to a complete stop before turning to Pump Reverse.**

**Failure to let the pump stop before reversing may damage the pump and drive.**

Turn the **Pump Rev|Off|Fwd** switch to **Rev** to start the pump in the reverse direction. Use this feature to purge oil from the mold.

## Vent Cycle Start

Press the **VENT**button to start the vent cycle timer. Use this feature to purge air and water from the unit and process.

## Mode Select

With the pump running, you can select the **AUTO** position or the **Maintained** (manual cooling) position with the **Mode Select** switch. Select **AUTO** mode to energize the controller, permitting it to monitor and control the process. The switch automatically returns to the **Center Default** position when in **AUTO** mode. The switch stays in the **Maintained** position in **Manual Cooling** mode.

**⚠CAUTION**

**Always let the pump run for at least one (1) minute before switching to AUTO mode.**

**Never switch to AUTO mode when filling or venting the unit, except as described in the Unit Startup chapter. Improper switching can seriously damage the heater, as it could become energized with air in the system.**

## Alarm Silence

Press the **ALARM SILENCE** button to silence the audible alarm on the console.

**⚠CAUTION**

**After you silence the alarm, make sure you *locate and correct* the alarm condition before continuing with unit operation.**

# 6 Preventive Maintenance

**⚠WARNING**

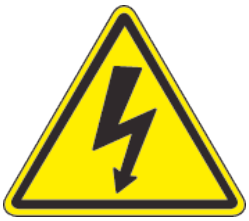

**Make sure that your maintenance technicians comply with lock-out/tag-out procedures during any servicing or maintenance of this unit and related equipment, per OSHA article ART 1910.147.**

***Before you begin servicing this unit*, disconnect all power to the unit, let the unit cool down *completely*, and turn off the water.**

**Failure to follow these directives can result in serious injury or *death!***

## 6-1 Periodic Checks

### Making Daily Checks

- Check fluid level; *add fluid as needed*.
- Check all connecting lines, hoses, and connectors for wear or damage.

### Making Monthly Checks

- Check for leaks developing at the pump seal, gaskets, and other similar locations.
- Check the pump drive V belt for any wear.
- Check the reservoir tank vent for any obstructions.

### Making Quarterly Checks

- Check the heat transfer fluid for deterioration. If the fluid is noticeably darker, or it seems significantly thicker, drain the system and replace the fluid with fresh, new recommended heat transfer fluid.

  Do a routine check of the fluid every 1,000 hours of operation or every three (3) months, whichever comes first. Contact the Service Department for information on fluid testing.

### Making Six-Month Checks

- Inspect electrical connections for secure, tight electrical terminations and ground connections. Inspect the power cable, especially at the entrance point to the electrical enclosure. Have a qualified electrician perform this inspection.
- Check the mounting bolts on the pump, the motor, and the heater flange for tightness.
- Remove the heat exchanger tube bundle and check it for lime and mineral deposits. Carefully clean the bundle as needed.

## 6-2 Routine Servicing

Your hot oil temperature control unit requires little in preventive maintenance and servicing. To keep it in good, reliable working order, make sure you follow the following scheduled preventive maintenance procedures.

Keep surfaces clean and free of any excessive accumulations of dirt, oil, or debris. This is especially true for the pump. It relies on free air circulation for proper cooling.

Check the motor air intake screen for any accumulation of dirt; clean it as needed.

### Servicing the Unit Monthly or Every 500 Hours

- **Lubricate the pump** at the grease fittings with Dow-Corning #44 or a high-quality lithium grease rated at 400ºF (204ºC) or higher that is compatible with Dow-Corning #44. *Do not over-lubricate*.
- **Adjust** the pump drive **belt tension**. Make sure that the motor pulley is properly aligned with the pump pulley; use a straightedge to check. Tighten motor mounting bolts after realignment.
- Inspect the screen in the Y strainer for accumulations of debris. Clean as needed.

### Servicing the Unit Every Three Months

Remove and clean the screen in the Y-strainer. Replace the screen if it is damaged.

## 6-3 Draining the Unit for Storage

You should thoroughly flush and drain the unit if you need to take it out of service for a long time, or if you expect it to become exposed to freezing temperatures. ACS Group recommends TrueFlush™ or SterlFlush™ flushing fluid or equivalent for flushing your hot oil unit; follow unit flushing instructions that comes with TrueFlush™ SterlFlush™ flushing fluid.

Drain plugs are provided at the base of the heater tank, reservoir tank and on the pump. You should also remove, drain and reinstall the heat exchanger tube bundle before storage.

## 6-4 Corrective Maintenance

### Pumps and Seals

Each unit is completely tested and calibrated before leaving the factory. The unit is then cooled, drained, and packed for shipment.

If the unit stands idle for a long time before being installed in your factory, gaskets can dry out and possibly leak when you start the unit. In most cases, these gaskets soon swell and form a tight seal. If not, **you may need to tighten the bolts to stop the leak.**

Similarly, rough handling in shipping may sometimes cause minor leaks upon startup; **you may need to re-tighten bolts or fittings to stop the leak.**

You should expect to periodically replace the pump seal. If the pump is properly lubricated and used at moderate temperatures, the seal should last several years. The following section describes the proper procedures for replacing the seal (Mechanical seal, part no. 162-00030-160). Periodic replacement of the pump drive V-belt is also to be expected.

**NOTICE**

If the pump motor wiring is disconnected for removal from the unit, **you must check the actual direction of rotation** when the motor is rewired to the unit. Consult Elementary Diagram provided in unit for more information.

## 6-5 Maintaining the Pump

### Disassembly

**⚠WARNING**

***Before* opening the pump chamber:**

- **Make sure that any pressure in the chamber has been *completely vented!***
- **Make sure that the motor cannot be inadvertently started while you work on the pump!**

**Failure to follow these precautions may result in serious injury or *death!***

**Figure 5**
18-24 GPM Pump Construction 075-00370-02

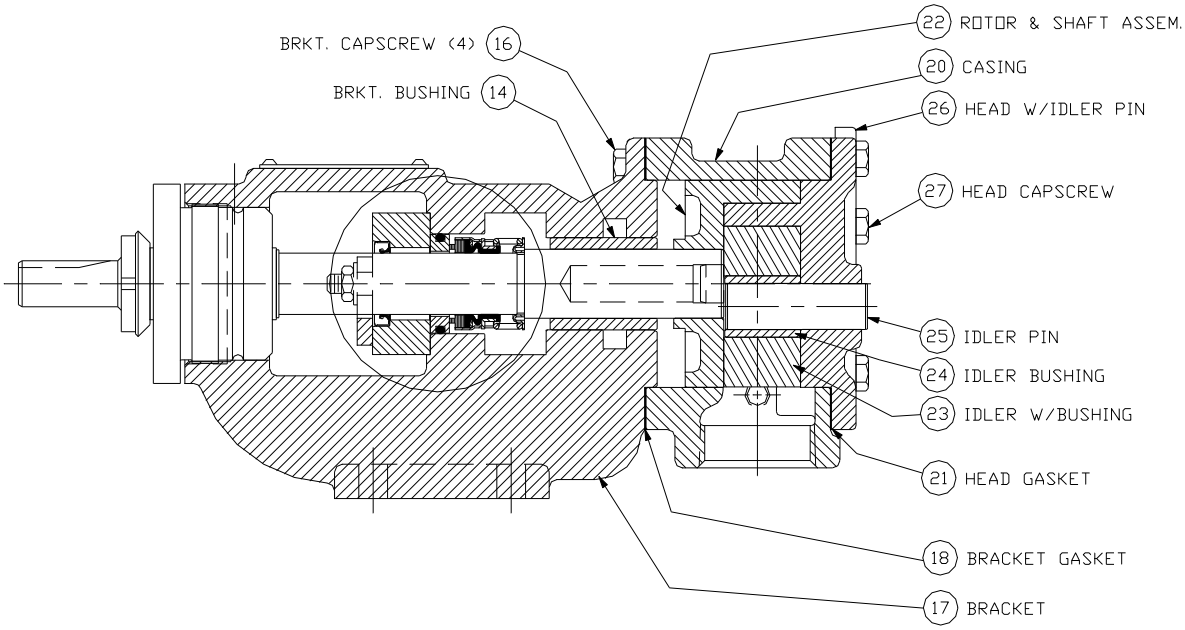


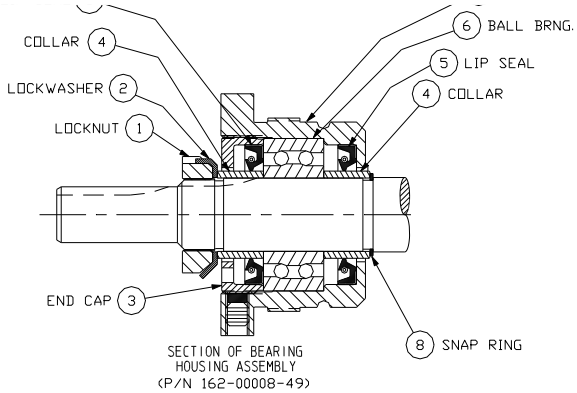

| ITEM | QTY | DESCRIPTION | PART NUMBER |
|---|---|---|---|
| | 1 | BEARING HOUSING ASSEMBLY | 162-00008-49 |
| 1 | 1 | LOCKNUT | 162-00008-35 |
| 2 | 1 | LOCKWASHER | 162-00008-40 |
| 3 | 1 | CAP,END,BRG | 162-00008-17 |
| 4 | 1 | COL,SPCR,SET OF 2 | 162-00008-19 |
| 5 | 2 | CLSR,BRG,HSG | 162-00008-20 |
| 6 | 1 | BRG,BALL | 162-00008-14 |
| 7 | 1 | HSG,BRG | 162-00008-24 |
| 8 | 1 | RING,SNAP | 162-00030-108 |
| 9 | 1 | BOLT,SEAL,HLDR | 162-00030-160 |
| 10 | 1 | SEAL,HLDR,FOR,VIKING,PMP | 162-00030-159 |
| 11 | 1 | SEAL,LIP | 162-00030-153 |
| 12 | 1 | PL,SEAL | 162-00030-154 |
| 13 | 1 | SL,MECH,HI,TEMP | 162-00030-144 |
| 14 | 1 | BUSH,BRKT | 162-00008-98 |
| 15 | – | – | – |
| 16 | 1 | CPSC,PRESS,RLF,VLV,SET OF 4 | 162-00008-18 |
| 17 | 1 | BRKT&BUSH | 162-00030-155 |
| 18 | 1 | GSKT,FLNG,BACK | 162-00008-09 |
| 19 | 3 | PLUG,PIPE,STL,SQ,HD,SOLD,1/8 | 012-00001-00 |
| 20 | 1 | CASING,HL,PMP | 162-00008-47 |
| 21 | 1 | GSKT,HEAD | 162-00008-08 |
| 22 | 1 | RTR&SFT,ASSY | 162-00030-156 |
| 23 | 1 | IDL&BUSH | 162-00030-56 |
| 24 | 1 | BUSH,IDL,GRAPHITE | 162-00030-02 |
| 25 | 1 | PIN,IDL | 162-00008-36 |
| 26 | 1 | PIN,HEAD&IDL | 162-00030-92 |
| 27 | 1 | CPSC,PRESS,RLF,VLV,SET OF 4 | 162-00008-18 |
| 28 | 1 | NUT,PACK,GL,SET OF 2 | 162-00008-43 |

## Disassembling the Pump

1. Mark head and casing before disassembly to insure proper reassembly. The idler pin, which is offset in the pump head, must be positioned toward and equal distance between port connections to allow for proper flow of liquid through pump.

   Remove head from pump. Do not allow idler to fall from idler pin. To prevent this tilt top of head back when removing. Avoid damaging head gasket.

2. Remove idler and bushing assembly.

3. Insert length of hardwood or brass through port opening between rotor teeth to keep shaft from turning. Bend up tang of lockwasher and with a spanner wrench remove locknut and lockwasher from shaft.

4. Loosen Allen head setscrews in the face of the thrust bearing assembly. Remove the thrust bearing assembly by threading out of the bracket.

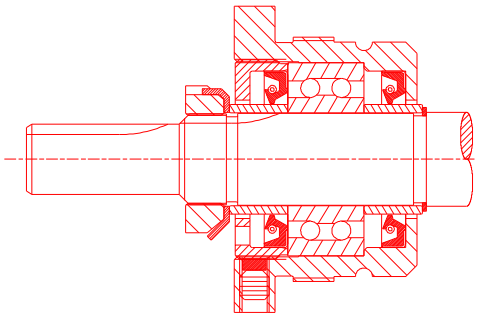

**Figure 6**
Thrust Bearing Assembly

5. Loosen the radial setscrews in the thrust bearing assembly and remove the end cap using the spanner wrench.

6. Remove the bearing spacer collars and the ball bearing.

7. Using snap ring pliers, remove snap ring from shaft.

8. Remove two nuts holding seal gland plate and seal gland in place. Slide seal gland off of shaft being careful not to damage the lip seal.

9. Using a soft headed hammer, gently tap on the end of the rotor shaft until the rotor and shaft assembly can be completely removed from the pump. Note the mechanical seal may stick to the shaft causing initial resistance when the shaft is removed.

10. Remove the mechanical seal parts from the bracket.

11. Clean all parts thoroughly and examine for wear and damage. Check lip seals, ball bearing, bushings and idler pin and replace if necessary. Check all other parts for nicks, burrs, excessive wear and replace if necessary.

    Wash bearings in clean solvent. Blow out bearings with compressed air. Do not allow bearings to spin; turn them slowly by hand. Spinning bearings will damage race and balls. Make sure bearings are clean, then lubricate with non-detergent SAE 30 weight oil and check for roughness. Roughness can be determined by turning outer race by hand.

12. Casing can be checked for wear or damage while mounted on bracket.

## Pump Assembly

The seal used in this pump is simple to install. If you take care during installation, good performance will result.

The principle of the mechanical seal is to make contact between the rotary and stationary members. These parts are lapped to a high finish, and their sealing effectiveness depends on complete contact. When requesting special seal information, make sure that you give the pump model number and serial number.

1. Install bracket bushing if required. If bracket bushing has a lubrication groove, install bushing with groove at 6:00 o'clock position in bracket. If carbon graphite, **Refer to Installation of Carbon Graphite Bushings,** page 47.

2. Coat shaft of rotor shaft assembly with non-detergent SAE 30 weight oil. Start end of shaft in bracket bushing turning from right to left, slowly pushing rotor in casing.

**Figure 7**
Mechanical Seal Assembly

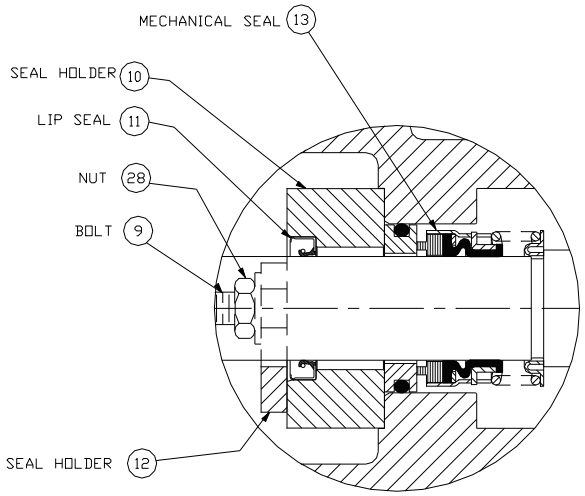


3. Coat idler pin with non-detergent SAE 30 weight oil and place idler and bushing on idler pin in head. If replacing with carbon graphite bushing, **Refer to Installation of Carbon Graphite Bushings,** page 50.

4. Using a .010 to .015 inch head gasket, install head and idler assembly on pump. Pump head and casing were marked before disassembly to insure proper reassembly. If not, be sure idler pin, which is offset in pump head, is positioned toward and equal distance between port connections to allow for proper flow of liquid through pump. Tighten head capscrews evenly.

5. Place the mechanical seal installation tapered half rings over the shaft and apply P-80 oil supplied with the replacement seal, **grease is not recommended** on the sleeve and rotor shaft. Slide the rotating portion of the mechanical seal on the shaft until it bottoms on the shaft step. See Figure 5. Remove the seal installation tapered half rings. It is important when using the rings to make sure the thin edge is facing the direction of the shaft end, and that the thick end is facing the rotor.

6. Apply lubricant to the seal seat o-ring and push it in the bracket. Note the shinny side of the seat goes towards the carbon graphite seal face.

7. Apply Dow Corning #44 high temperature silicon grease to the lip seal area in the seal gland and install on the shaft. Install the seal gland plate and secure with two nuts.

8. Pack ball bearing with Dow Corning #44 high temperature silicon grease and install in the thrust bearing housing. Place bearing spacer collars inside the lip seals. Thread the end cap into the bearing housing and tighten with a spanner wrench. Tighten the radial set screws that lock the end cap in place.

9. Using the snap ring pliers, install the snap ring onto the shaft.

10 Thread the thrust bearing assembly into the bracket. Turn until hand tight. This forces the rotor against the head.

11. Put lock-washer and locknut on shaft. Insert length of hardwood or brass through port opening between rotor teeth to keep shaft from turning. Tighten locknut to 50 – 70 ft.-lbs. torque and bend one tang of lock-washer into slot.

12. Adjust pump end clearance. Refer to section on Thrust Bearing Adjustment.

13. Lubricate all grease fittings with Dow Corning #44 high temperature silicon grease.

## Thrust Bearing Adjustment

1. Loosen axial setscrews in face of end cap on the thrust bearing assembly. If rotor shaft cannot be turned by hand, back off the thrust bearing assembly until there is a noticeable drag of the shaft. Note mechanical seal will provide some drag and this is a normal condition. The thrust bearing assembly must be turned in until it can just be turned over by hand. This ensures the rotor is against the head and a zero end clearance condition exists.

2. Make a mark on the OD of the bearing housing and a corresponding mark on the bracket. Back off thrust bearing housing the required number of marks or distance on the OD as shown below.

3. Tighten the axial setscrews in the face of the thrust bearing assembly. Make sure the rotor shaft turns freely. If it does not, repeat steps 1 and 2.

| PUMP SIZE | Turn Outer End Cap C.C.W. | |
|---|---|---|
| | No. of Notches* | or Length on O.D., Inches |
| G | - | 0.75" |
| HL, HV | 6 | 1" |
| KK | 10 | 1.38" |

*Each small notch on outer end cap represents .001 inch end clearance.

**⚠WARNING**

***Before* starting the pump, make sure that all drive equipment guards are in place!**

**Failure to properly install the guards may result in serious injury or *death!***

## Installation of Carbon Graphite Bushings

When installing carbon graphite bushings, extreme care must be taken to prevent breaking. Carbon graphite is a brittle material and easily cracked. If cracked, the bushing will quickly disintegrate. Using a lubricant and adding a chamfer on the bushing and the mating part will help in installation. The additional precautions listed below must be followed for proper installation:

1. A press must be used for installation.

2. Be certain bushing is started straight.

3. Do not stop pressing operation until bushing is in proper position. Starting and stopping will result in a cracked bushing.

4. Check bushing for cracks after installation.

Carbon graphite bushings with extra interference fits are frequently furnished for high temperature operation. These bushings must be installed by a shrink fit.

1. Heat bracket or idler to **750°F**.

2. Install cool bushings with a press.

3. If facilities are not available to reach **750°F**. temperature, it is possible to install with **450°F**. temperature; however, the lower the temperature, the greater the possibility of cracking the bushing.

## Preventative Pump Maintenance

You can extend the life of your pump and reduce the cost per gallon pumped if you perform a few preventive maintenance procedures.

### Lubricating the Pump

Using #2 ball bearing grease and a hand-operated grease gun gently lubricate all grease fittings **after every 500 hours** of operation **or after 60 days**, whichever comes first. If pump service occurs in severe conditions, lubricate more frequently. Use an appropriate type of grease for hot or cold applications.

### Adjusting End Clearance

After long periods of service, the running clearance between the end of the rotor teeth and head may be increased from wear. The pump may lose some capacity of pressure as a result. If you reset the end clearance, pump performance should improve.

### Examining Internal Parts

Remove the head occasionally and examine the idler, bushing, head and pin for wear. Replace the idler bushing and idler pin after moderate wear to avoid replacing more expensive parts later.

***Note:*** Make sure the idler doesn't slide off the idler pin during head removal to avoid damage and personal injury.

### Cleaning the Pump

A clean pump is easier to inspect, lubricate and adjust; it runs better and *looks better!*

### Storing Your Hot Oil Unit

If you anticipate that your unit will be out of service or stored for a long time, flush and drain the pump and circulating system to protect it from freeze-ups or rusting. See Section 6-3 on Page 39 for more information.

## How to increase Belt Life

**Keep sheaves and belts clean.**
Abrasive dust, rust, oil and acids reduce service life.

**Give drives elbow room.**
Never let belts run against belt guards or other obstructions.

**Use large diameter sheaves and fewer belts.**
You save money and increase drive life.

**Never force belts.**
Move motor on adjustable base so belts can go on easily.

**Eliminate slack.**
Adjust motor and tighten belts in position. Slack belts wear excessively, cause slippage and deliver less power.

**Use matched belts.**
Matched belts run smoother and last longer because the load is evenly distributed. Never replace just part of a set of belts.

**Avoid belt idlers.**
Belt idlers decrease belt life! Always maintain proper tension through motor adjustment.

**Mount belts straight.**
Shafts must be parallel and sheave grooves in alignment to prevent unnecessary belt wear.

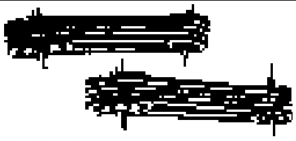

**Don't overload.**
An overloaded belt drive is like a one-ton truck with a two-ton load — both are sure to break down. Always use ample capacity.

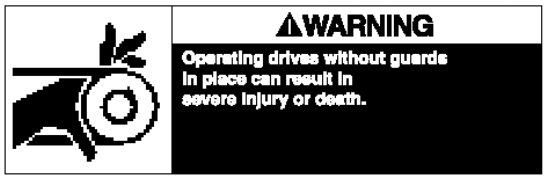


© Emerson Power Transmission Manufacturing, L.P. 1998, 1999.
All Rights Reserved.

Browning®

## BELT TENSIONING INSTRUCTIONS

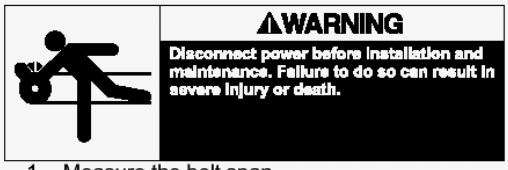

1. Measure the belt span.
2. Calculate deflection
3. See tables below for correct deflection force.
4. Apply force at right angles to the center of the span (see diagram below). The BROWNING® belt tension checker, shown at left, is ideal for this procedure.
5. Check the tension at least twice during the first day of operation, and periodically thereafter.

**Be sure — use the inexpensive BROWNING® Belt Tension Checker See Form 5453 for more detail.**

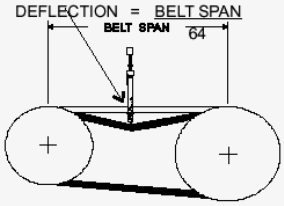


The capacity of the BROWNING® belt tension checker is 35 lbs. Other means of applying force must be used if force requirement is greater than this.

**SHEAVE DIAM - INCHES**
**DEFLECTION FORCE - LBS.**

| Belt Cross Section | Smallest Sheave Diameter Range | RPM Range | Belt Deflection Force: Super Gripbelts and Unnotched Gripbands, Used Belt | Super Gripbelts and Unnotched Gripbands, New Belt | Gripnotch Belts and Notched Gripbands, Used Belt | Gripnotch Belts and Notched Gripbands, New Belt |
|---|---|---|---|---|---|---|
| A,AX | 3.0 - 3.6 | 1000-2500<br>2501-4000 | 3.7<br>2.8 | 5.5<br>4.2 | 4.1<br>3.4 | 6.1<br>5.0 |
| | 3.8 - 4.8 | 1000-2500<br>2501-4000 | 4.5<br>3.8 | 6.8<br>5.7 | 5.0<br>4.3 | 7.4<br>6.4 |
| | 5.0 - 7.0 | 1000-2500<br>2501-4000 | 5.4<br>4.7 | 8.0<br>7.0 | 5.7<br>5.1 | 8.4<br>7.6 |
| B,BX | 3.4 - 4.2 | 860-2500<br>2501-4000 | -<br>- | -<br>- | 4.9<br>4.2 | 7.2<br>6.2 |
| | 4.4 - 5.6 | 860-2500<br>2501-4000 | 5.3<br>4.5 | 7.9<br>6.7 | 7.1<br>6.1 | 10.5<br>9.1 |
| | 5.8 - 8.6 | 860-2500<br>2501-4000 | 6.3<br>6.0 | 9.4<br>8.9 | 8.5<br>7.3 | 12.6<br>10.9 |
| C,CX | 7.0 - 9.0 | 500-1740<br>1741-3000 | 11.5<br>9.4 | 17.0<br>13.8 | 14.7<br>11.9 | 21.8<br>17.5 |
| | 9.5 - 16.0 | 500-1740<br>1741-3000 | 14.1<br>12.5 | 21.0<br>18.5 | 15.9<br>14.6 | 23.5<br>21.6 |
| D | 12.0 - 16.0 | 200-850<br>851-1500 | 24.9<br>21.2 | 37.0<br>31.3 | -<br>- | -<br>- |
| | 18.0 - 20.0 | 200-850<br>851-1500 | 30.4<br>25.6 | 45.2<br>38.0 | -<br>- | -<br>- |
| 3V,3VX | 2.2 - 2.4 | 1000-2500<br>2501-4000 | -<br>- | -<br>- | 3.3<br>2.9 | 4.9<br>4.3 |
| | 2.65 - 3.65 | 1000-2500<br>2501-4000 | 3.6<br>3.0 | 5.1<br>4.4 | 4.2<br>3.8 | 6.2<br>5.6 |
| | 4.12 - 6.90 | 1000-2500<br>2501-4000 | 4.9<br>4.4 | 7.3<br>6.6 | 5.3<br>4.9 | 7.9<br>7.3 |
| 5V,5VX | 4.4 - 6.7 | 500-1749<br>1750-3000<br>3001-4000 | -<br>-<br>- | -<br>-<br>- | 10.2<br>8.8<br>5.6 | 15.2<br>13.2<br>8.5 |
| | 7.1 - 10.9 | 500-1740<br>1741-3000 | 12.7<br>11.2 | 18.9<br>16.7 | 14.8<br>13.7 | 22.1<br>20.1 |
| | 11.8 - 16.0 | 500-1740<br>1741-3000 | 15.5<br>14.6 | 23.4<br>21.8 | 17.1<br>16.8 | 25.5<br>25.0 |
| 8V | 12.5 - 17.0 | 200-850<br>851-1500 | 33.0<br>26.8 | 49.3<br>39.9 | -<br>- | -<br>- |
| | 18.0 - 22.4 | 200-850<br>851-1500 | 39.6<br>35.3 | 59.2<br>52.7 | -<br>- | -<br>- |

**Figure 8**
Customer Recommended Spare Parts

## Immersion Heaters

| Part number | Description |
|---|---|
| 722-00138-01 | HTR, IMM, 6 KW, 208 V, 3”, 6 ELE |
| 722-00138-02 | HTR, IMM, 6 KW, 240 V, 3”, 6 ELE |
| 722-00138-03 | HTR, IMM, 6 KW, 380 V, 3”, 6 ELE |
| 722-00138-04 | HTR, IMM, 6 KW, 415 V, 3”, 6 ELE |
| 722-00138-05 | HTR, IMM, 6 KW, 480 V, 3”, 6 ELE |
| 722-00138-06 | HTR, IMM, 6 KW, 600 V, 3”, 6 ELE |

**NOTICE** 6 kW heaters are modified 12 kW heaters; jumpers are remove from one leg.

## Heater Gasket

| Part number | Description |
|---|---|
| 542-00007-08 | GASKET, FLANGE, 3 |

## Heater Tank

| Part number | Description |
|---|---|
| 572-92405-00 | TANK, HEATER, TCO, 3½ |

## Manual Reset Safety Thermostat

| Part number | Description |
|---|---|
| 724-00041-00 | THERMOSTAT, 200ºF — 550ºF |

**NOTICE** Please give model and serial numbers when ordering parts. **Prices are subject to change without notice.**

Figure 8
Customer Recommended Spare Parts *Cont'd.*

## Pressure Gauge

| Part number | Description |
|---|---|
| 037-00158-00 | GAUGE, PRESSURE, 0 — 100 PSI |

## Heat Exchanger

| Ass'y. part no. | Description |
|---|---|
| 106-00024-00 | 1.5 SQ. FT. 400°F |

## Casters

| Part number | Description |
|---|---|
| 042-00016-00 | CASTER, SWIVEL, 3" |
| 042-00017-00 | CASTER, STATIONARY, 3" |

## Sight Glass Assembly

| Part number | Description |
|---|---|
| 037-00047-00 | GLASS, SIGHT, 27" |

**NOTICE**

Please give model and serial numbers when ordering parts.
**Prices are subject to change without notice.**

Figure 8
Customer Recommended Spare Parts *Cont'd.*

## Controller

| Part number | Description |
|---|---|
| 724-00671-01 | LTR, MPB, 1/16, 2, T/C Omron E5CK |

## Selector Switches and Push Buttons

| Part number | Description |
|---|---|
| 721-01028-00 | PUMP STOP |
| 721-01027-00 | PUMP START |
| 721-01026-00 | ALARM SILENCE |
| 717-01016-00 | MODE SELECT |
| 721-01026-00 | VENT |
| 721-01029-00 | PUMP REVERSE |
| 717-10055-00 | HALF-FULL HEAT, LOCAL-REMOTE (OPTIONAL) |

## Pressure Switches

| Part number | Description |
|---|---|
| 733-00029-00 | SWITCH, PRESSURE |

## Pump

| Part number | Description |
|---|---|
| 075-00381-02 | MECH. SEAL, VIKING G4125 (0-10 GPM) |

## Motors

| Part number | Description |
|---|---|
| 720-09217-00 | MOTOR, ¾ HP 3/60/208, 230, 460 V |
| 720-09024-00 | MOTOR, ¾ HP 3/60/575 V |

## Replacement Belts

| Part number | Description |
|---|---|
| 100-00309-00 | BELT, 4L, 27-1/2LG |

**NOTICE**

Please give model and serial numbers when ordering parts.
**Prices are subject to change without notice.**

Figure 8
Customer Recommended Spare Parts *Cont'd.*

## Solenoid Valves

| Part number | Description |
|---|---|
| 732-00007-03 | ¼" VENT VALVE, 115 V COIL (0-125 PSI, 300°F) |
| 732-00012-02 | ½" VENT VALVE, 115 V COIL (0-125 PSI, 300°F) |

## Sensing Probe Equipment

| Part number | Description |
|---|---|
| 701-00036-00 | SENSOR, TC, TYPE "K" |
| 692.07369.28 | SENSOR, RTD, 1000 OHM |

## Disconnect Switches

| Part number | Description |
|---|---|
| 728-00153-00 | SWITCH, DISCONNECT, 45 AMP |
| 728-00168-00 | SWITCH, DISCONNECT, 100 AMP |

## Heater Tank Insulation

| Part number | Description |
|---|---|
| 542-08133-00 | INSULATION, TANK, HEATER |

## Ful-Flo Relief Valves

| Part number | Description |
|---|---|
| 044-00304-00 | VALVE, RELIEF, FUL-FLO, ½" |

**NOTICE**

Please give model and serial numbers when ordering parts.
**Prices are subject to change without notice.**

| Condition | Possible cause | Solution |
|---|---|---|
| Temperature fluctuations/rapid cycling from hot to cold. | Undersized connectors/lines. | Increase size of connectors/ water lines. |
| | Long connecting lines between unit and mold. | Move the unit closer to the mold and shorten connecting lines. |
| | Serpentine flow through mold. | Connect lines for parallel flow instead of series flow. |
| | Blocked line in mold. | Check mold for metal chips or deposits. Clean mold. |
| | Quick disconnect fitting with check valve. | Remove and replace fitting or valve. |
| | Carbon build-up in unit piping or fittings. | Clean or replace affected piping. Replace fluid. |
| | Faulty TCU. | Check unit by opening the manual bypass to determine if the TCU contols the set point temperature. |
| | Reversed probes. | Switch Return and Delivery probes. |
| Unit does not heat properly/can not achieve set point. | Loss of fluid in process. | Check all lines/connections/ fittings. |
| | Vent valve open. | Allow vent timer to run out; **or**, check valve operation when unit is cold by opening the fill port. |
| | Faulty/dirty solenoid valve; usually detected when there is a steady stream or trickle of water out of the drain line. | Switch to Manual Cool mode several times to flush valve. If the leak continues, disconnect the power to the unit, turn off the water supply, and clean or replace the solenoid. |
| | Degraded fluid. | Drain and replace fluid. |
| Unit does not heat. | Defective heater contactor. | Visual inspection of coil and contacts. Repair/replace defective contactors. |
| | Defective immersion heater. | Check resistance on all three (3) legs of heater with an ohmmeter. If not all equal, contact factory for replacement heater. |
| | Heater burnout. | Check heater tank for scorched/ discolored paint. Check resistance on all three (3) legs of heater with an ohmmeter. Replace heater as needed. |

| Condition | Possible cause | Solution |
|---|---|---|
| Unit does not heat. (cont'd.) | Controller heater output open. | Check the heater output with an ohmmeter to ground. It should read in the mega-ohm range. Infinite or zero readings indicate a defective output. |
| | Clogged Y strainer. | Clean Y strainer. |
| Unit overheats/unable to cool. | Water supply to unit is turned **OFF**. | Open water supply. |
| | Water drain is plugged or excessive back pressure in drain line. | Clear drain line or eliminate back pressure condition. |
| | Heat exchanger tubes plugged by lime deposits. | Remove tube bundles; clean/ replace as required. |
| | Faulty solenoid valve. | Test solenoid valve by switching to Manual Cool mode and listen for valve operation. Replace if faulty. |
| Rapid drop in pressure/no pressure. | Leaks in connecting lines. | Inspect/replace faulty line or connection. |
| | Air in circulating lines. | Perform venting sequence in Section 4-1 on Pages 27-29. |
| | Low fluid. | Check fluid level in sight glass. Add fluid if required. |
| | Defective Ful-Flo valve. | Replace Ful-Flo valve. |
| | Water in fluid. | Drain water from low point in piping (Section 4-1 on Pages 27-29), or boil water off. |
| | Vent solenoid open. | Allow vent timer to run out; **or**, check valve operation when unit is cold by opening the fill port. |
| | Pump running in reverse. | Check motor; rewire if necessary. (See electrical diagrams) |
| | Pump repair/adjustment needed. | Adjust head spacing or replace worn pump components. |
| | V belt broken/worn. | Replace as required. |
| Noisy pump. | Water in fluid. | Drain water from low point in piping (Section 4-1 on Pages 27-29), or boil water off. |
| | Severely degraded fluid. | Drain and flush system. Replace fluid. |

# DIAGRAMS

## FLOW &
## ELEMENTARY ELECTRICAL

**Please refer to Electrical Drawings Provided in Packet with Unit**

# *Service Notes*

# Service Notes

# *Service Notes*

# Service Notes

# *Service Notes*

# Technical Assistance

## Parts and Service Department

The ACS Customer Service Group will provide your company with genuine OEM quality parts manufactured to engineering design specifications, which will maximize your equipment's performance and efficiency. To assist in expediting your phone or fax order, please have the model and serial number of your unit when you contact us. A customer replacement parts list is included in this manual for your convenience. ACS welcomes inquiries on all your parts needs and is dedicated to providing excellent customer service.

**For immediate assistance, please contact:**

- North, Central and South America, 8am – 5pm CST +1 (800) 483-3919 for drying, conveying, heating and cooling and automation. For size reduction: +1 (800) 229-2919.
  North America, emergencies after 5pm CST (847) 439-5855
  **North America email: acsuscanadacustserv@corpemail.com**

- Mexico, Central & South America
  **Email: acslatinamericacustserv@corpemail.com**

- Europe, Middle East & Africa +48 22 390 9720
  **Email: acseuropecustserv@corpemail.com**

- India +91 21 35329112
  **Email: acsindiacustserv@corpemail.com**

- Asia/Australia +86 512 8717 1919
  **Email: acsasiacustserv@corpemail.com**

## Sales and Contracting Department

Our products are sold by a worldwide network of independent sales representatives. Contact our Sales Department for the name of the sales representative nearest you.

Let us install your system. The Contract Department offers any or all of these services: project planning; system packages including drawings; equipment, labor, and construction materials; and union or non-union installations.

**For assistance with your sales or system contracting needs please Call:**
North, Central and South America +1 (262) 641-8600 or +1 (847) 273-7700
Monday–Friday, 8am–5pm CST

- Europe/Middle East/Africa +48 22 390 9720

- India +91 21 35329112

- Asia/Australia +86 512 8717 1919

**Facilities:**
ACS offers facilities around the world to service you no matter where you are located. For more information, please visit us at www.acscorporate.com

United States:

**ACS Schaumburg-Corporate Offices**
1100 E. Woodfield Road
Suite 588
Schaumburg, IL 60173
Phone: + 1 847 273 7700
Fax: + 1 847 273 7804

**ACS New Berlin- Manufacturing Facility**
2900 S. 160th Street
New Berlin, WI 53151
Phone : +1 262 641 8600
Fax: + 1 262 641 8653

Asia/Australia:

**ACS Suzhou**
109 Xingpu Road SIP
Suzhou, China 215126
Phone: + 86 8717 1919
Fax: +86 512 8717 1916

Europe/Middle East/Africa:

**ACS Warsaw**
Ul. Działkowa 115
02-234 Warszawa
Phone: + 48 22 390 9720
Fax: +48 22 390 9724

India

**ACS India**
Gat No. 191/1, Sandbhor Complex
Mhalunge, Chakan, Tal Khed,
Dist. Pune 410501, India
Phone: +91 21 35329112
Fax: + 91 20 40147576