STAT*IM* 2000S/5000S

Cassette Autoclave™

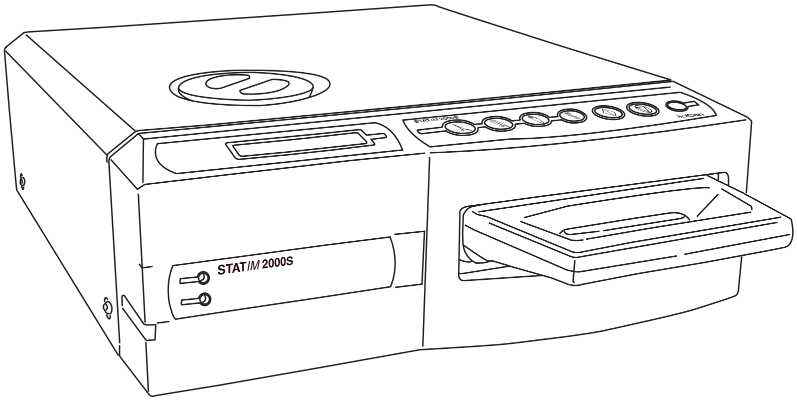
STAT*IM* 2000S
SciCan

• Operator's Manual

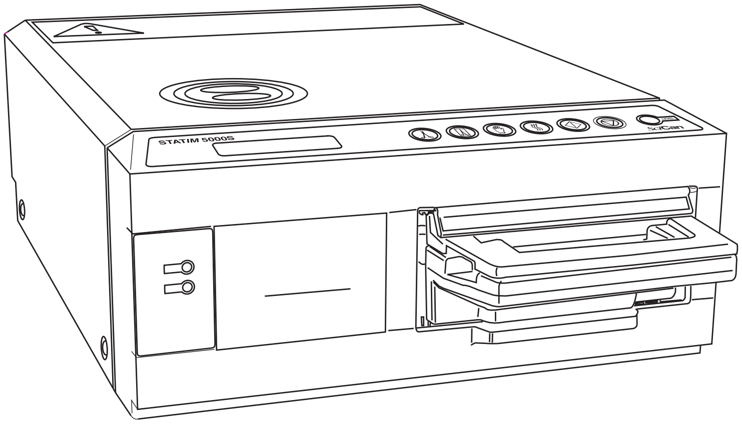
STAT*IM* 5000S
SciCan

SciCan

www.scican.com

STAT*IM* 2000S/5000S Operator's Manual 95-108430 Rev 6.0.

Copyright 2006 SciCan. All rights reserved.

Table of Contents

1. Introduction 7

2. Important Information 8
2.1 Disclaimers
2.2 Statim 2000S — Unit Overview
2.3 Statim 5000S — Unit Overview

3. Installation 11
3.1 Environmental Considerations
3.2 Unit Placement
3.3 Connecting the Waste Bottle
3.4 Filling the Reservoir
3.5 Priming the Statim Pump
3.6 Setting the Time and Date
3.7 Language Selection
3.8 Assigning Unit Identifier Number
3.9 Shipping the Unit

4. Instructions for Use 15
4.1 Statim 2000S — Cassette
4.2 Statim 5000S — Cassette
4.3 Statim 5000S — STAT-DRI Plates
4.4 Preparing and Loading Instruments
4.5 Instrument Weight Table
4.6 Selecting a Cycle
4.7 Running a Cycle
4.8 Stopping a Cycle

5. Maintenance 25
5.1 Cleaning the Cassette
5.2 Cleaning the Water Reservoir Filter
5.3 Cleaning the Reservoir
5.4 Cleaning the Exterior Surfaces
5.5 Changing the Statim 2000S Air Filter
5.6 Changing the Bacteria Retentive Air Filters
5.7 Replacing the Cassette Seal
5.8 Maintaining Fluid Levels
5.9 Reading Water Quality
5.10 Preventative Maintenance Schedule

6. The Communication Port 29
6.1 The RS232 Communication Port
6.2 Installing the Statim Data Logger
6.3 Installing Paper on the Internal Printer
6.4 Removing Internal Printer Paper Jams
6.5 Internal Printer Output Overview

7. Troubleshooting 39

8. Spare Parts List 43

9. Warranty 44

10. Test Protocol 45
10.1 Type Test

11. Specifications 47
11.1 Statim 2000S — Specifications
11.2 Statim 5000S — Specifications

Statim is a registered trademark and STAT-DRI is a trademark of SciCan Ltd. All other trademarks referred to in this manual are the property of their respective owners.

For all service and repair inquiries:

In Canada	1-800-870-7777
United States:	1-800-572-1211
International:	(416) 446-4500
Email:	techservice.ca@scican.com

Manufactured by:
SciCan
1440 Don Mills Road,
Toronto ON M3B 3P9
CANADA
Phone: (416) 445-1600
Fax: (416) 445-2727
Toll free: 1-800-667-7733

0123

EU REPRESENTATIVE:
BHT Hygienetechnik GmbH
Messerschmittstr. 11,
D-86368 Gersthofen
GERMANY
Phone: 49-0821-278-930
Fax: 49-0821-78-40-99

SciCan Medtech AG
Alpenstrasse 16, 6300 Zug Switzerland
Phone: (41-41) 727-70-27
Fax: (41-41) 727-70-29

1. Introduction

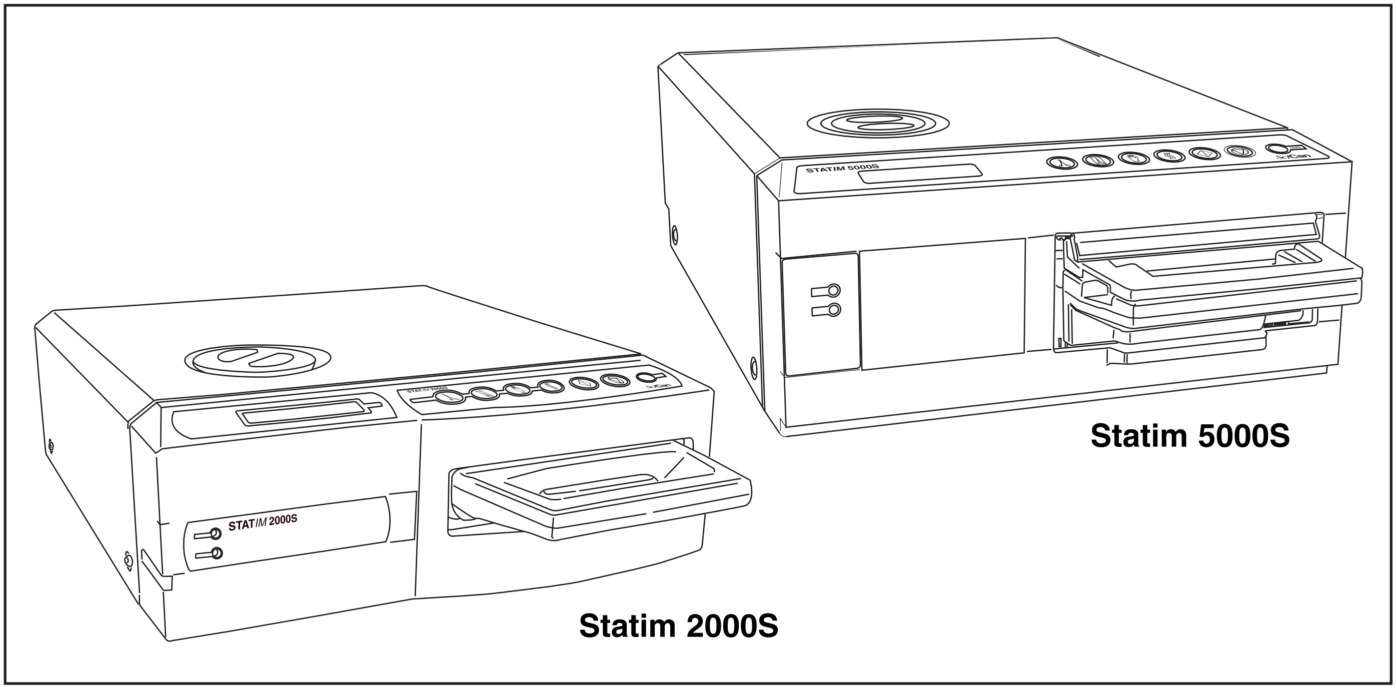

Congratulations on your selection of the STAT*IM*® Cassette Autoclave. We are confident that you have purchased the finest equipment of its type. The Statim is a compact, counter-top unit that features a number of sterilizing cycles designed to meet your needs and suitability for steam sterilization. The Statim "S" Cassette Autoclaves are fully compliant with EN13060.

The details of installing, operating and servicing your Statim are all contained within this operator's manual. To ensure years of safe, trouble-free service please read these instructions before operating this unit and keep them for future reference. Operational, maintenance and replacement instructions should be followed for the product to perform as designed. Contents of this manual are subject to change without notice to reflect changes and improvements to the Statim product.

The Statim is suitable for the sterilization of dental and medical instruments designed to withstand steam sterilization. The Statim has not been designed to sterilize liquids, cloth loads, biomedical waste or materials not compatible with steam sterilization.
The processing of such loads may result in incomplete sterilization and / or damage to the autoclave. For more information about instrument suitability for steam sterilization, consult the manufacturers' reprocessing instructions.

2. Important Information

2.1 Disclaimers

Use only steam-process distilled water in your Statim. Deionized, demineralized, or specially filtered water should not be used. Never use tap water.

Do not permit any person other than certified personnel to supply parts for, service or maintain your Statim. SciCan shall not be liable for incidental, special or consequential damages caused by any maintenance or services performed on the Statim by a third party, or for the use of equipment or parts manufactured by a third party, including lost profits, any commercial loss, economic loss, or loss arising from personal injury.

Never remove the cover of the unit and never insert objects through holes or openings in the cabinetry. Doing so may damage the unit and / or pose a hazard to the operator.

All elements of this book are common to both Statim 2000S and Statim 5000S except when noted.

IMPORTANT:

Follow local guidelines governing verification of the sterilization procedure.

SciCan
1440 Don Mills Road,
Toronto, ON M3B 3P9
CANADA
Phone: (416) 445-1600
Fax: (416) 445-2727
Toll free: 1-800-870-7777

SciCan Medtech AG
Alpenstrasse 16, 6300 Zug
SWITZERLAND

Email: customer_servicecanada@scican.com

www.scican.com

2. Important Information Con't.

2.2 Statim 2000S — Unit overview

1 level indicator
2 keypad
3 reservoir cap/ water filter
4 LCD
5 power indicator
6 active indicator
7 power switch
8 power cable port
9 leveler feet
10 exhaust tube port
11 compressor
12 cassette
13 biological filter
14 RS232 port

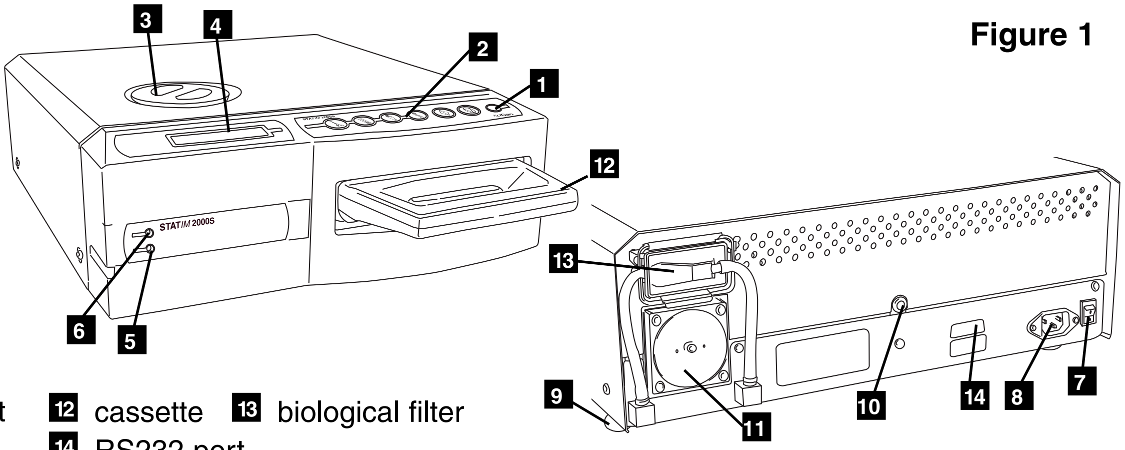

Figure 1

The following symbols appear in the margins of this book.	⚠	A potential hazard to the operator.	❗	A situation which may lead to a mechanical failure.	!	Important information

The following symbols appear on the unit:

- **START** button
- **STOP** button
- UNWRAPPED cycles
- WRAPPED cycles
- Power Indicator LED
- RUBBER / PLASTIC cycles
- Air dry only.
- Active Indicator LED
- ⚠ Caution: Hot Surface and/or Hot Steam
- ⚠ Caution: Risk of electrical shock. Disconnect supply before servicing
- ⚠ Caution: Refer to manual for details

When you receive your Statim 2000S packing carton, the items listed below will be included. If any of the items are missing, contact your dealer immediately so the situation can be corrected.

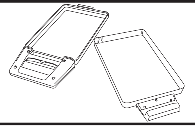	**Cassette Tray and Lid**
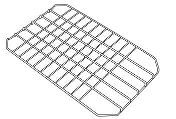	**Unwrapped Instrument Rack**
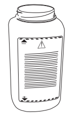	**Waste Bottle**
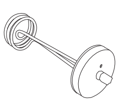	**Bottle Lid Fitting**
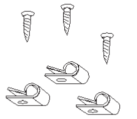	**Tube Mounting Hardware**

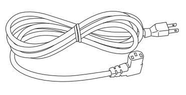	**Power Cord**
	Operator's Manual / 10 Easy Maintenance Tips
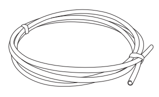	**Exhaust Tube**
	Stat-Dri
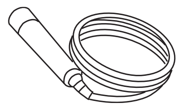	**P.C.D. + 20 SciCan Sterilization Emulators**

2.3 Statim 5000S — Unit overview

Figure 2

1 level indicator
2 keypad
3 reservoir cap/ water filter
4 LCD
5 power indicator
6 active indicator
7 power switch
8 power cable port
9 leveler feet
10 exhaust tube port
11 biological filter
12 optional internal printer (not on all models)
13 cassette
14 RS232 port (not on all models)

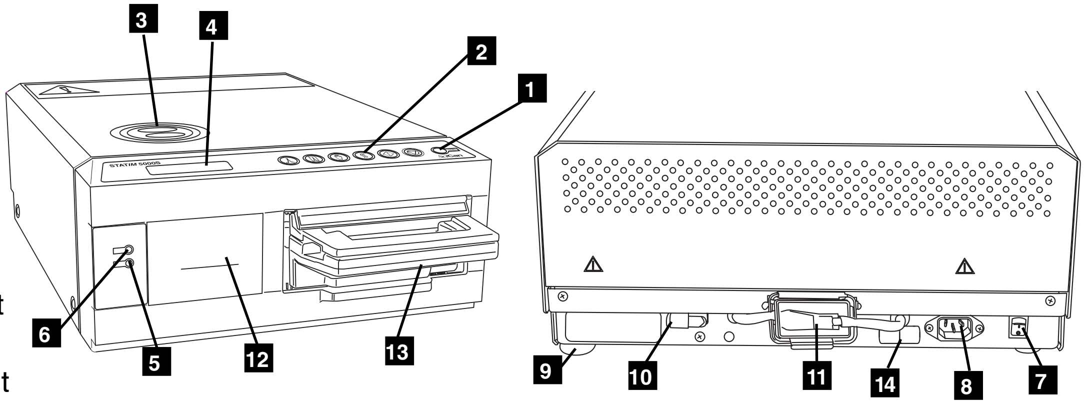

The following symbols appear in the margins of this book.

⚠ A potential hazard to the operator.

❗ A situation which may lead to a mechanical failure.

! Important information

The following symbols appear on the unit:

◇ **START** button

▽ **STOP** button

UNWRAPPED cycles

WRAPPED cycles

Power Indicator LED

RUBBER / PLASTIC cycles

Air dry only.

Active Indicator LED

⚠ Caution: Hot Surface and/or Hot Steam

⚠ Caution: Risk of electrical shock. Disconnect supply before servicing

⚠ Caution: Refer to manual for details

When you receive your Statim 5000S packing carton, the items listed below will be included. If any of the items are missing, contact your dealer immediately so the situation can be corrected.

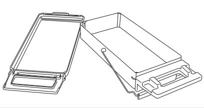	**Cassette Tray and Lid**
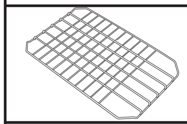	**Unwrapped Instrument Rack**
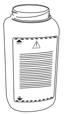	**Waste Bottle**
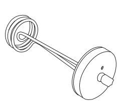	**Bottle Lid Fitting**
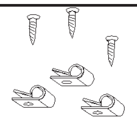	**Tube Mounting Hardware**

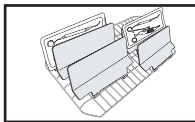	**Drying Enhancement Plates**
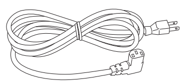	**Power Cord**
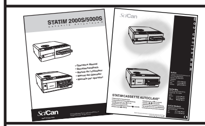	**Operator's Manual / 10 Easy Maintenance Tips**
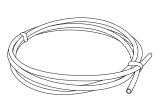	**Exhaust Tube**
	Stat-Dri
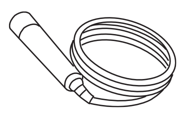	**P.C.D. + 20 SciCan Sterilization Emulators**

3. Installation

3.1 Environmental Considerations

There are several factors that may affect the performance of your Statim.
Please review these factors, and select a suitable location in which to install the unit.

- **Temperature and Humidity**

Avoid installing your Statim in direct sunlight or close to a heat source (e.g. vents or radiators). The recommended operating temperatures are 15-25˚C with humidity of 25-70%.

- **Spacing**

The vents and openings on the Statim should remain uncovered and unobstructed. Leave a minimum of 50 mm between the top, sides and back of the unit and any wall or partition.

- **Venting**

The Statim should be operated in a clean, dust free environment.

- **Work Surface**

The Statim should be placed on a flat, level, water-resistant surface.
Never install and operate the unit on a sloped surface.

- **Electromagnetic Environment**

The Statim has been tested and meets applicable standards for electromagnetic emissions. While the unit does not emit any radiation, it may itself be affected by other equipment which does. We recommend that the unit be kept away from potential sources of interference.

- **Electrical Requirements**

Use properly grounded and fused power sources with the same voltage rating as indicated on the label at the back of your Statim. Avoid multiple outlet receptacles. If using a surge suppressor power bar, plug in one Statim only.

3.2 Unit Placement

When placing the unit on a counter top, ensure the following:

- The level indicator bubble **1** on the front panel should be balanced in the front right quadrant of the target. This will ensure that the unit drains properly. Adjusting the three leveler feet will help you move the bubble if necessary.
- The unit should be stable and all four feet should be securely in contact with the counter surface.
  This will prevent the unit from moving freely.

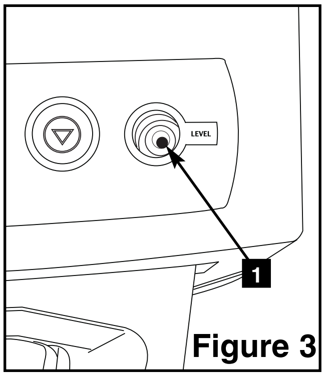

Figure 3

3.3 Connecting the Waste Bottle

The waste bottle **2** is used to collect the wastewater after it has been converted to steam and then drained from the cassette. To connect the waste bottle to the Statim, follow these steps (see figure 4):

1. Insert the exhaust **3** tube into the fitting **4** on the back of the unit and connect tightly.
2. Cut the tube to length and slide the waste bottle fitting **5** into place.
3. Place the free end of the tube into the hole in the lid of the waste bottle and hand-tighten the fitting. Do not coil the exhaust tube.
4. Unscrew the lid and copper condenser coil **6** assembly from the waste bottle. The lid and coil should come out together.
5. Fill the waste bottle with water to the MIN line and replace the lid and copper condenser assembly. Empty the waste bottle often to avoid unpleasant odors and discoloration of the contents. (A low-level disinfectant, prepared according to the manufacturer’s instructions, may be added to the waste bottle to remedy this situation). As a minimum, empty the waste bottle each time you refill the reservoir.
6. Place the waste bottle near the unit. Store the bottle below the unit. The tube can be routed through a hole, (8 mm in diameter) in the counter-top and secured with the provided nylon clamps.

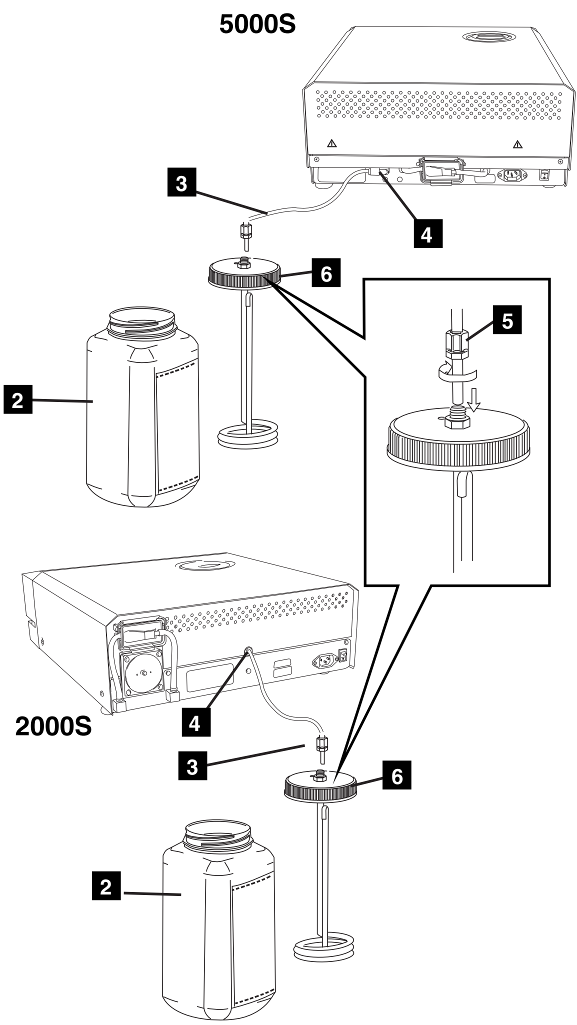

Figure 4

3.4 Filling the Statim Reservoir

When filling the reservoir, ensure you only use steam processed distilled water containing less than 5 ppm total dissolved solids (having conductivity of less than 10 µS / cm). The impurities and additives in other water sources will cause an error reading on the LCD. If you have a water conductivity meter (available from SciCan, order number 01-103139S) check each new water container before filling the reservoir. To fill the reservoir, follow these steps (see figure 5):

1. Remove the reservoir cap **2**
2. Pour steam-process distilled water into the reservoir until almost full (a maximum of 4L). Use a funnel to avoid spillage.
3. Replace and secure the cap.

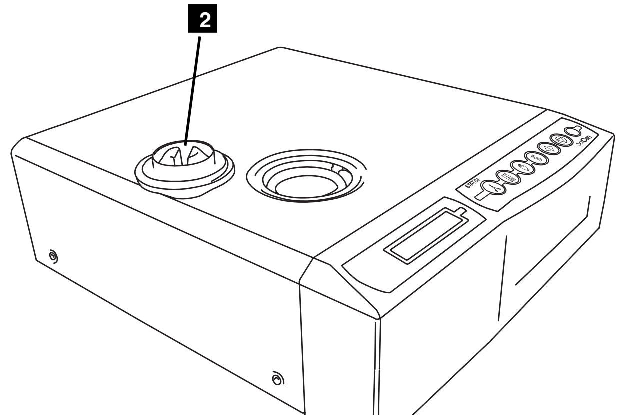

Figure 5

3.5 Priming the Statim Pump

To prime the Statim pump, follow these steps:

1. Move the unit to the edge of the work surface. The front leveler feet should be approximately 12 mm from the edge.
2. Lift the front left corner of the unit upward and remove the drain tube **3** from the clip located on the underside of the unit.
3. Pull the drain tube outward so the free end can be positioned over a water container.
4. Fill the reservoir with steam-process distilled water.
5. Remove the plug **4** from the end of the drain tube and allow water to drain from the tube into a container for 30 seconds. When the water flows in a steady stream, replace the stopper.
6. Lift the front left corner of the unit upward and reinsert the tube into the clip on the underside of the unit. Push the excess length of tubing back into the space provided.

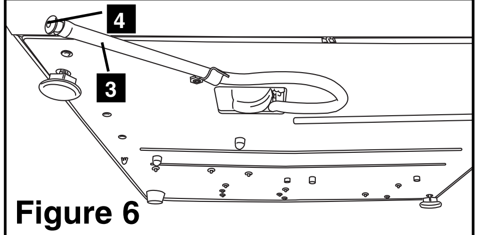

Figure 6

! Make sure the plug in the drain tube is secured.

3.6 Setting the Time and Date

To set the time and date, follow these steps and watch the blinking cursor on the LCD:

1. Power the Statim **OFF**.
2. Press and hold the UNWRAPPED cycle button.
3. While pressing the UNWRAPPED cycle button, power the Statim **ON**. The LCD display reads:

14:23	11/15/2006
HH:MM	DD/MM/YYYY

Display when setting the Date / Time

4. Use the cycle buttons to select and change the selected field's value. To increase a field's value, press the UNWRAPPED cycle button. Hold the button down to increase the value.
5. To decrease the value, press the WRAPPED cycle button.

6. To select the next field, press the RUBBER AND PLASTICS cycle button.
7. To save changes and return to the regular operating mode, press the **STOP** button.
8. To quit without making changes, power the Statim **OFF**.

3.7 Language Selection

The messages displayed on the LCD can be changed to a number of different languages. To change the current language selections, follow these steps:

1. Turn the power switch at the back of the unit **OFF**.
2. Press and hold the WRAPPED cycle button.
3. While depressing the WRAPPED cycle button, turn the power switch at the back of the unit to **ON**.

ENGLISH

Display when scrolling through languages

4. Press the UNWRAPPED cycle button to scroll to the next language selection.
5. Press the WRAPPED cycle button to scroll to the previous language.
6. When the desired language is displayed, press the **STOP** button to save the selection and return to the regular operating mode.

3.8 Assigning Unit Identifier Number

1. Power the Statim **OFF**.
2. Press and hold the RUBBER / PLASTIC cycle button.

STATIM 2000 S2S2R601
#323

Display when assigning unit number

3. While pressing the RUBBER / PLASTIC cycle button, power the Statim **ON**.
4. Using the cycle buttons, select a maximum of 3 digits to be used as the unit's identifier. The UNWRAPPED button will increase the selected value and the WRAPPED cycle button will decrease it. Use the RUBBER / PLASTIC to move to the next digit.
5. To save changes and return to the regular operating mode, press the **STOP** button.

3.9 Shipping the Unit

Before you move the unit, you will need to drain the reservoir. To do so, follow these steps:

1. Place a water container below the unit.
2. Using the drain tube (see section 3.5 Priming the Pump, Figure 6) empty the contents of the reservoir into the water container.
3. Remove any remaining water from the reservoir with a non-linting, absorbant towel.
4. Screw-in the three leveler feet found underneath the unit.
5. Repack the unit in the original packing materials and include all accessories originally included with the unit.
6. Specify heated and insured shipping.

4.1 Statim 2000S — Using the Cassette

When removing the cassette after a cycle, exercise caution as the metal areas will be hot and the cassette may contain hot steam.

- **To open the cassette**:

1. Hold the cassette handle with your thumbs facing inward on the cassette latch.
2. Push downward on the cassette latch.
3. Raise the cassette lid upwards and disengage the hinge.
4. Rest the lid on its outer surface.

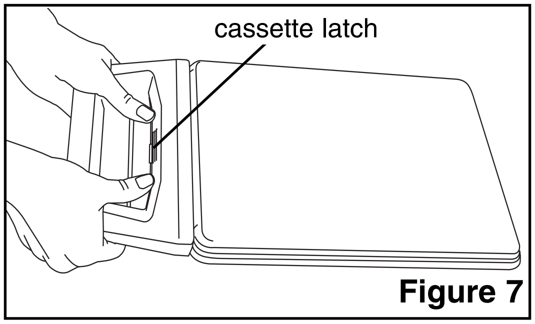

Figure 7

- **To close the cassette**:

1. Align the hinge tab on the cassette lid with the hinge slot on the rear of the bottom tray.
2. As you begin to close the lid, the hinge tab and slot will engage.

- **Inserting the cassette into the Statim 2000S**:

1. Place the end of the cassette into the unit.
2. Gently push inward until you hear a "click" sound.

Never push the cassette into the Statim with force as the interior components could be damaged.

- **Removing the cassette**:

1. Grasp the handle with two hands and pull away from the unit.
2. Pull the cassette clear of the unit and set down on a firm surface.

- **Disengaging the cassette**

When not in use, the cassette should be disengaged. To disengage the cassette, grasp the handle and pull the cassette out until there is a 15 mm to 20 mm (1/2 to 3/4") gap between the front of the Statim 2000S and the cassette handle.

- **STAT-DRI**

Treatment of the interior surfaces of the cassette with the Stat-Dri drying agent, provided with your unit, will enhance the drying process. (Replacement bottles are available from SciCan, order number 2OZPLUS, 8OZPLUST, 32OZPLUS).

4.2 Statim 5000S — Using the Cassette

When removing the cassette after a cycle, exercise caution as the metal areas will be hot and the cassette may contain hot steam.

- **To open the cassette**:

1. Push the carry handle **1** into the open position.
2. Put your hands on either side of the cassette handle.
3. Insert your forefingers in the slots and place your thumbs on the thumb pads.
4. Press down with your thumbs and pull up with your forefingers until the lid opens.
5. Raise the cassette lid and disengage from the tray. Rest the lid on its outer surface.

- **To close the cassette**:

1. Align the hinge tab on the lid with the hinge slot on the tray.
2. As you begin to close the lid, the hinge tab and slot will engage.
3. Place the carry handle into the closed position.

- **Inserting the cassette into the Statim 5000S**:

1. Hold the cassette handle in one hand and the carry handle in the other as shown in Figure 8.

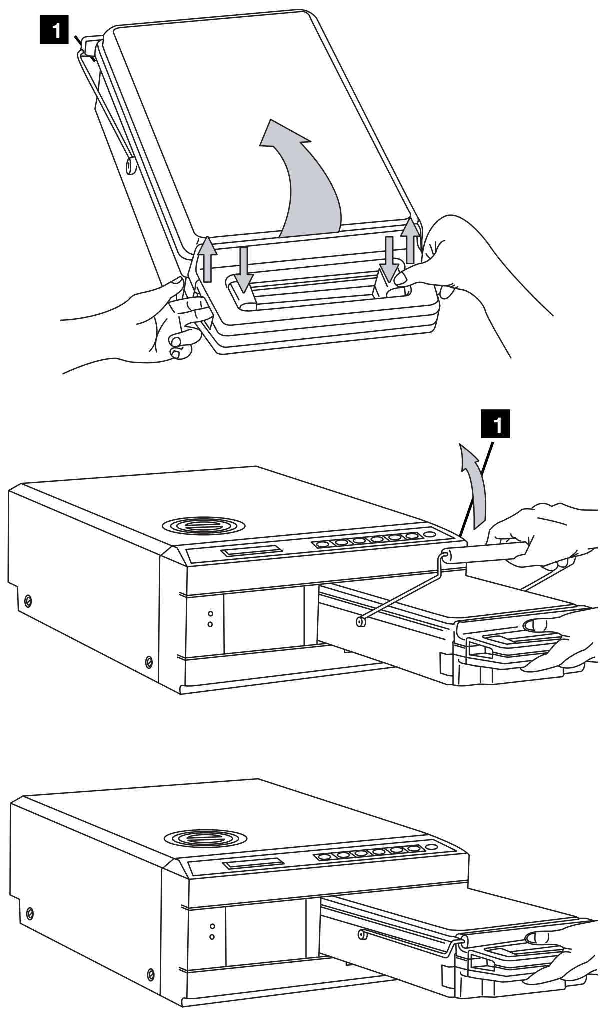

Figure 8

2. Place the end of the cassette into the unit and drop the carry handle into its closed position.
3. Gently push the cassette inward until you hear a click sound.

Never push the cassette into the Statim with force as the interior components could be damaged.

- **Removing the cassette**:

1. Grasp the cassette handle with one hand and pull out from the unit.
2. As the cassette emerges from the unit, grasp the carry handle with your free hand and lift it upwards.
3. Pull the cassette clear from the unit and set down on a firm surface.

- **Disengaging the cassette**

When not in use, the cassette should be disengaged. To disengage the cassette, grasp the handle and pull the cassette out until there is a 15 mm to 20 mm ($^{1}/_{2}$ to $^{3}/_{4}$") gap between the front of the Statim 5000S and the cassette handle.

4.3 Statim 5000S — STAT-DRI Plates

The Statim 5000S cassette uses STAT-DRI plates to enhance the drying process for wrapped instruments. The adjustable plates are designed for the unwrapped instruments rack and eliminate the need for a separate wrapped instrument rack.
Up to ten plates can be arranged along the length of the rack. Each unit is shipped with five STAT-DRI plates. Additional plates may be ordered from SciCan (SciCan part number 01-103935).

To install and adjust a STAT-DRI plate, follow these steps:

1. Hold a plate over the desired position, tilted slightly forward with the tabs down.
2. Insert the tabs between the mesh of the unwrapped instrument rack.
3. Each tab has an elongated slot. Slide the plate until the wire is at the end of each slot.
4. Release the plate to the resting position.
5. Prepare and load instruments for sterilization.

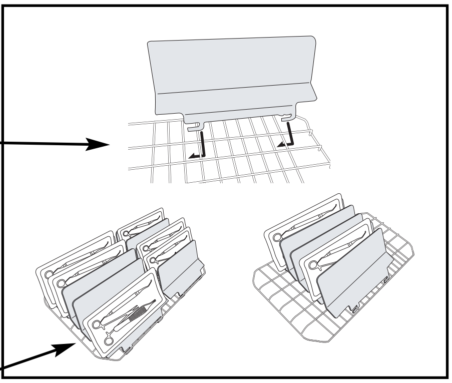

4.4 Preparing and Loading Instruments

Before loading any instruments into the Statim, consult the manufacturer's reprocessing instructions.

- **Clean Instruments**

Clean and rinse all instruments before loading them into the cassette. Disinfectant residues and solid debris may inhibit sterilization and damage the instruments, the cassette, and the Statim. Lubricated instruments must be wiped thoroughly and any excess lubricant should be removed before loading.

- **Unwrapped Instruments**

Arrange unwrapped instruments on the instrument rack in the tray so that they do not touch one another. This ensures that steam reaches all surfaces and will promote drying.

Instruments must not be stacked or piled in the cassettes, as this will impede the sterilization process.

- **Wrapped Instruments**

Place the instruments into autoclave bags according to the manufacturer's instructions. Orient the instrument rack in the cassette to ensure that wrapped instruments rest approximately 6 mm / 0.25" above the cassette base. Place the wrapped instruments on the rack and arrange them to avoid overlap. Ensure that all wrapped loads are dry before handling and /or storage to maintain sterility.

The use of cloth wraps in the Statim is not recommended.

SciCan recommends the use of paper / paper and plastic / paper autoclave bags manufactured in accordance to EN 868. Loosely pack instruments in the bags to allow steam penetration to all instrument surfaces.

- **Rubber and Plastic Instruments**

The following materials can be sterilized in the Statim:

nylon, polycarbonate (Lexan™), polypropylene, PTFE (Teflon™), acetal (Delrin™), polysulfone (Udel™), polyetherimide (Ultem™), silicone rubber, and polyester.

When loading rubber and plastic instruments in the tray, leave a space between the instruments and the cassette walls. This ensures that steam reaches all surfaces, and will promote drying.

The following materials **cannot** be sterilized in the Statim:

polyethylene, ABS, styrene, cellulosics, PVC, Acrylic (Plexiglas™), PPO (Noryl™), latex, neoprene, and similar materials.

Use of these materials may lead to instrument or equipment damage. If you are unsure of your instrument’s material or construction, do not load into your Statim until you have checked with the instrument manufacturer.

- **All Instruments**

!

The Statim is **NOT** intended for sterilizing textiles, liquids or biomedical waste. Instruments will remain sterile after a successful cycle until the cassette is disengaged from the unit. Unwrapped instruments, once exposed to ambient or external conditions, cannot be maintained in a sterile state. If sterile storage is desired, wrap the instruments to be sterilized in autoclave bags, according to the instrument manufacturer’s instructions. Then allow the wrapped cycle to run until the air-dry phase is complete.

Best Practice: Allow instruments (wrapped or unwrapped) to dry completely prior to handling. Wrapped or pouched instruments must not touch each other to promote drying and enable effective sterilization.

- **Note for Ophthalmology Use**

In the field of ophthalmology, proper wrapping or pouching of surgical instruments will reduce the exposure of instruments to any process residues during the sterilization process. Due to the highly sensitive nature of some types of surgery (particularly in ophthalmology), SciCan recommends that all instruments be routinely packaged or wrapped and processed through the wrapped cycle of the sterilizer. This practice is the suggested approach for the majority of sterile surgical procedures and is referenced in most leading infection control publications and guidelines.

- **Routine Monitoring**

Chemical process indicators suitable for steam sterilizers should be included in or on each package or load being sterilized. In addition, the weekly use of biological indicators, which allow you to ascertain whether the instruments have been exposed to sterilization conditions, is recommended.

4.5 Instrument Weight Guide

Instrument	Typical Instrument Weight
Scissors	30 g / 0.96 oz
Dental scalers	20 g / 0.64 oz
Forceps	15 g / 0.48 oz
Dental handpiece	40 to 60 g / 1.29 to 1.92 oz
Wrapped instrument rack	260 g / 8.35 oz
Unwrapped instrument rack	225 g / 7.23 oz
Suction cannula	10 g / 0.32 oz
Plastic mouth mirror	8 g / 0.25 oz
Impression tray	15 to 45 g / 0.48 to 1.45 oz
Plastic x-ray positioning ring	20 g / 0.64 oz

NOTE: The above weights are to be used as reference only. For exact weights of your instruments, consult the manufacturer’s specifications.

4.6 Selecting a Cycle

The Statim 2000S and 5000S have seven sterilization cycles, each designed to sterilize using the parameters specified. Each cycle can be selected by pressing the UNWRAPPED, WRAPPED or RUBBER / PLASTIC cycle buttons.

The types of instruments, sterilization requirements and a graph depicting each cycle characteristics are described over the following pages.

1. Unwrapped Cycles

The Statim 2000S and 5000S feature two 134˚C type S and one 134˚C type N UNWRAPPED sterilization cycles. At the end of the cycle's sterilization phase, air drying will commence for one hour.

Air-drying can be interrupted at any time by pressing the **STOP** button.

To select one of these cycles:
Press the UNWRAPPED
cycle button to scroll through the available cycles.

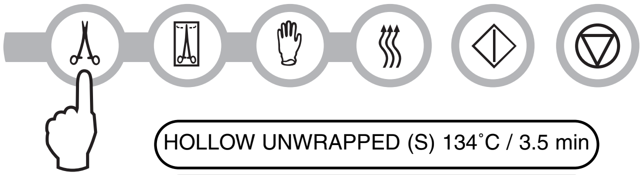

HOLLOW UNWRAPPED (S) 134˚C / 3.5 min

HOLLOW UNWRAPPED (S) 134˚C / 18 min

SOLID UNWRAPPED (N) 134˚C / 3.5 min

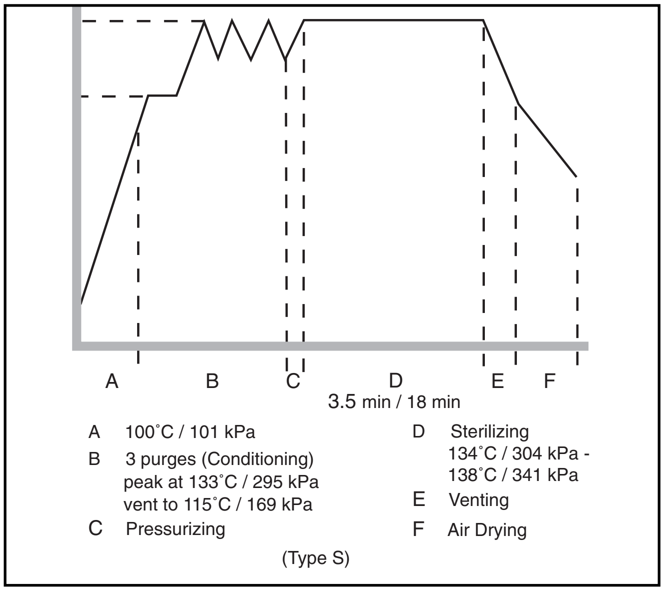

Once the desired cycle has been selected, press the **START** button.

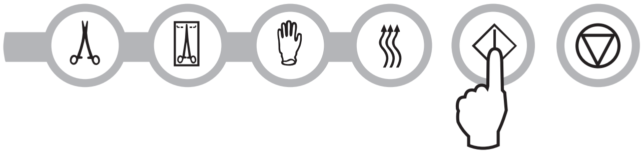

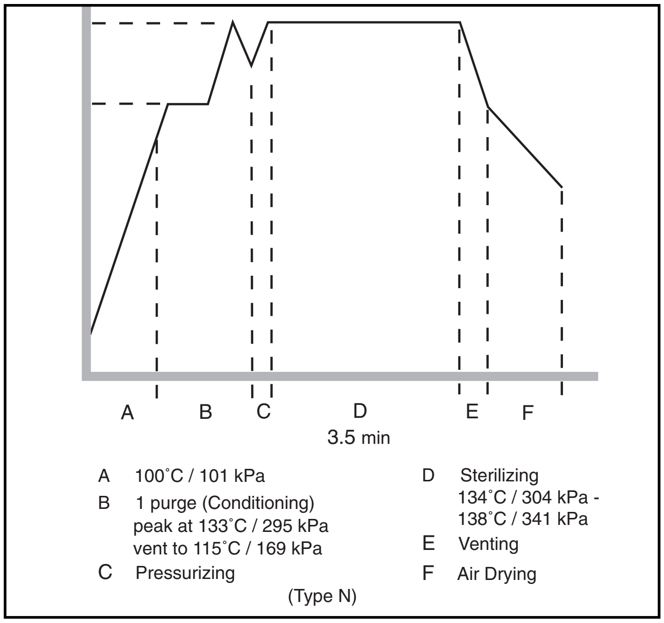
A
B
C
D
E
F
3.5 min
A 100˚C / 101 kPa
B 1 purge (Conditioning) peak at 133˚C / 295 kPa vent to 115˚C / 169 kPa
C Pressurizing
D Sterilizing 134˚C / 304 kPa - 138˚C / 341 kPa
E Venting
F Air Drying
(Type N)

The unit memory remembers the last cycle run and then displays this first when the unit is powered on.

2. Hollow Wrapped Cycles

The Statim 2000S and 5000S feature two WRAPPED 134˚C type S sterilization cycles.

To select one of these S Cycles:
Press the WRAPPED button to scroll through the available cycles.

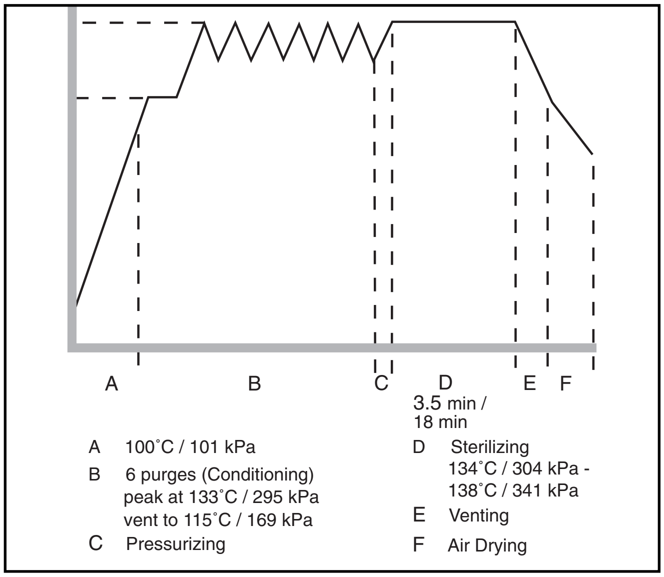

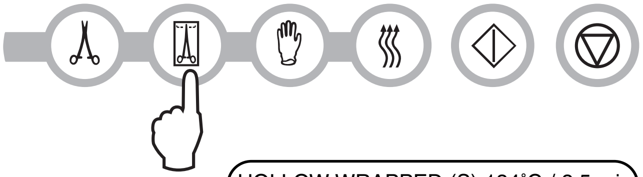

HOLLOW WRAPPED (S) 134˚C / 3.5 min

HOLLOW WRAPPED (S) 134˚C / 18 min

Once the desired cycle has been selected, press the **START** button.

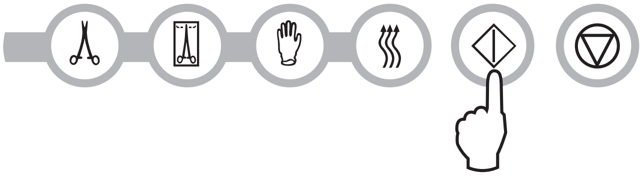

The unit remembers the last cycle run and then displays this first when the unit is powered on.

A Process Challenge Device (PCD) is available for validation of HOLLOW WRAPPED (S) 134˚C/3.5 min cycle.

3. Rubber and Plastics Cycle

The Statim 2000S and 5000S feature two 121˚C type S sterilization cycles.

To select one of these S Cycles:
Press the RUBBER / PLASTIC button to scroll through the available cycles.

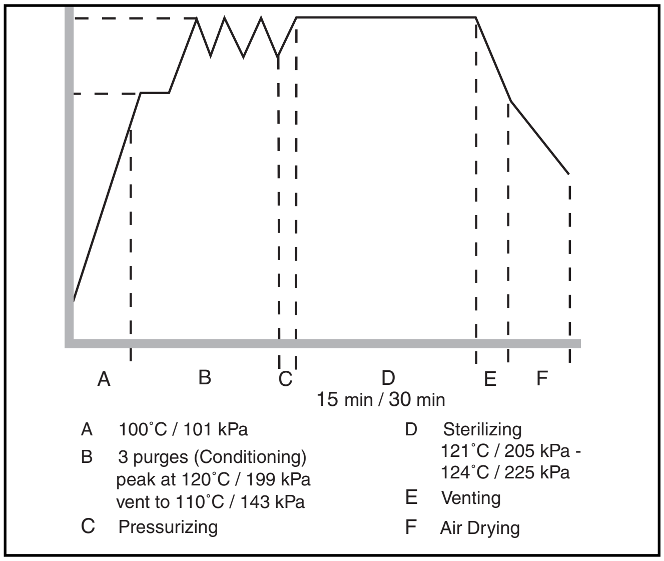

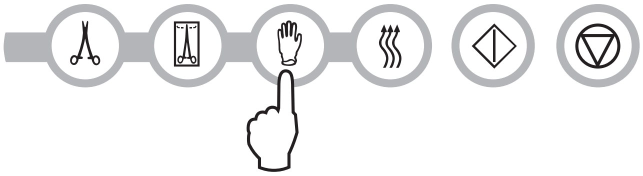

RUBBER / PLASTIC (S) 121˚C / 15 min

RUBBER / PLASTIC (S) 121˚C / 30 min

Once the desired cycle has been selected, press the **START** button.

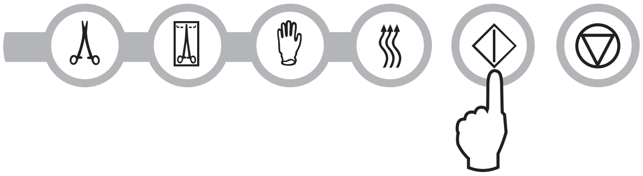

The unit remembers the last cycle run and then displays this first when the unit is powered on.

4. Air Dry Only Cycle

This is not a sterilization cycle.

The Air Dry Only Cycle starts automatically after each sterilizing cycle and runs for 60 minutes.

Air drying may be interrupted by pressing the **STOP** button. To ensure that the contents of the cassette are dry, the cycle should run for the full 60 minutes. Dryness is important for unwrapped instruments for corrosion prevention. For wrapped instruments, a dry wrap is required to maintain sterility.

If the **STOP** button is pressed during the air drying stage of the sterilization cycle, and the cassette has not been removed from the autoclave, the Air Dry Only Cycle may be used to complete the sterilization cycle. If the cassette has been removed from the autoclave, it may not be reinserted for the Air Dry Only Cycle. If the cassette contains wrapped instruments and the wraps are not dry when the cassette is opened, the instruments must be handled in an aseptic manner for immediate use or resterilized.

To start, press the Air Dry Only Cycle button, then press the **START** button.

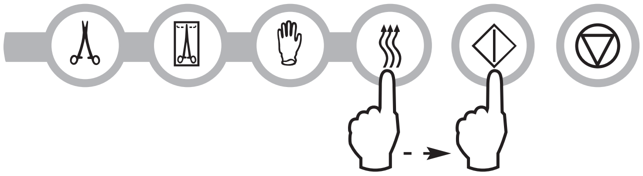

When started independently, this cycle will run for 1 hour.

4.7 Running a Cycle

To operate each cycle, follow these steps and watch the LCD .

1. Turn the power switch at the back of the unit to **ON**. The LCD display reads:

14:23 11/15/2006
SELECT A CYCLE

2. Press the appropriate cycle button on the keypad to scroll through the available cycles

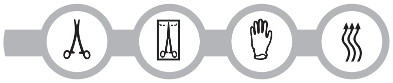

The display will read either:

HOLLOW UNWRAPPED
(S) 134˚C / 3.5 min

HOLLOW UNWRAPPED
(S) 134˚C / 18 min

SOLID UNWRAPPED (N)
134˚C / 3.5 min

or

HOLLOW WRAPPED (S)
134˚C / 3.5 min

HOLLOW WRAPPED (S)
134˚C / 18 min

or

RUBBER / PLASTIC (S)
121˚C / 15 min

RUBBER / PLASTIC (S)
121˚C / 30 min

As the button is released the display reads:

Cycle you selected
PRESS **START**

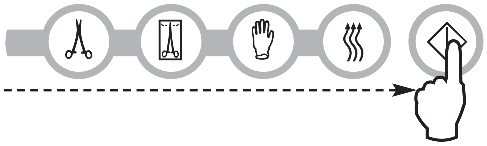

The unit's cycle counter is displayed at the start, after the start button is depressed.

Cycle you selected
CYCLE NUMBER 000000

The amber indicator light comes on. To indicate that the cycle is in progress, the following messages are displayed as the cycle runs.

Cycle you selected
WARMING UP

►

CONDITIONING
110˚C 143 kPa

►

PRESSURIZING
125˚C 232 kPa

►

STERILIZING
136.8˚C 330 kPa 3:29

►

VENTING
108˚C 134 kPa

▼

As the cycle is running,
various sounds will be heard.
This is the normal functioning of the unit.

The buzzing noise during the air drying stage is the compressor operating. The air drying phase of the cycle may be interrupted at any time by pressing the **STOP** button. The display will read:

PLEASE WAIT
CYCLE COMPLETE

When the automatic 60-minute air drying stage is finished the display reads:

REMOVE CASSETTE
CYCLE COMPLETE

If a sterilization cycle is successful the reminder tone sounds and the amber light flashes until the **STOP** button is pressed or the cassette is removed from the unit.

4.8 Stopping a Cycle

To stop a cycle press the **STOP** button. If the **STOP** button is pushed, the cassette is removed, or the unit detects a problem while operating, the cycle will stop and the amber active light will flash. Once a cycle has been stopped, the **STOP** button must be pressed before another cycle can be started. The display reads any of the following messages:

CYCLE FAULT xxx
NOT STERILE

or

CASSETTE REMOVED
NOT STERILE

If the display shows the message, CYCLE FAULT or NOT STERILE, the cassette contents are not sterile! See section 7. Troubleshooting for more information.

If the air drying stage of the cycle is interrupted, do not store wrapped instruments that were in the cassette unless they are dry.

5. Maintenance

5.1 Cleaning the Cassette

Keeping the Statim cassette clean is good clinical practice and assists in the function of the unit. SciCan recommends that the interior surface be cleaned at least once a week. Use dishwashing soap or a mild detergent that does not contain chlorine. Scrub the inside of the cassette with a cleaning pad designed for use with Teflon™ coated surfaces. After scouring, rinse thoroughly with water to remove all traces of the detergent. Cleaning the inside of your cassette is very important if you regularly sterilize lubricated instruments. Coating the entire inside surface with STAT-DRI drying agent induces water to form an even coat on the inside surface, without beading. The water in contact with the hot cassette surfaces also evaporates much more efficiently. Spotting is minimized and instruments dry much better. STAT-DRI should be applied every 10 cycles, and after every cassette cleaning.

5.2 Cleaning the Water Reservoir Filter

This water reservoir filter should be cleaned at least once a week or when required. The filter can easily be removed and cleaned by placing the filter upside down under running water to wash away the particles until clean, and then placed back into the reservoir opening. If a replacement water reservoir filter is required, order part number 01-109300S.

5.3 Cleaning the Reservoir

Check the reservoir for dirt or particles. The reservoir may be cleaned by draining followed by cleaning and rinsing with steam process distilled water ONLY. Use of chemicals or cleaning agents is not reccommended and could cause the unit damage.

5.4 Cleaning the Exterior Surfaces

Use a soft cloth moistened with soap and water to clean all exterior surfaces. Do not use harsh cleaning chemicals or disinfectants.

5.5 Changing the Statim 2000S Air Filter

The filter should be replaced every six months in order to maintain an adequate supply of clean air during the air drying cycle.

To change the filter, follow these steps:

1. Turn the power switch at the back of the unit **OFF**.
2. Remove and discard the old foam air filter **4**.
3. Install the new filter **4** (SciCan part no. 01-100207S).
4. Secure the filter plate **2** to the back of the compressor using the screw **1** retained during the disassembly procedure.

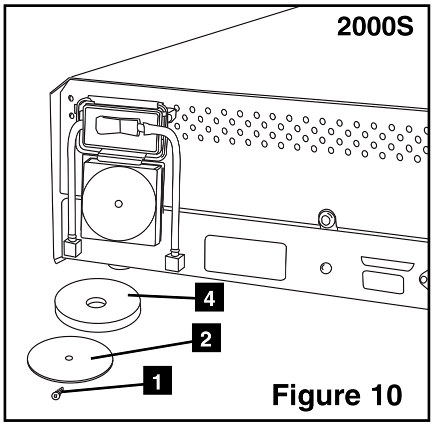

Figure 10

5.6 Changing the Bacteria Retentive Air Filters

The filters should be replaced every six months or after 500 cycles to maintain an adequate supply of clean air during the air drying cycle.

To change the bacteria retentive air filter on the Statim 2000S and 5000S, follow these steps:

1. Power the Statim **OFF**.

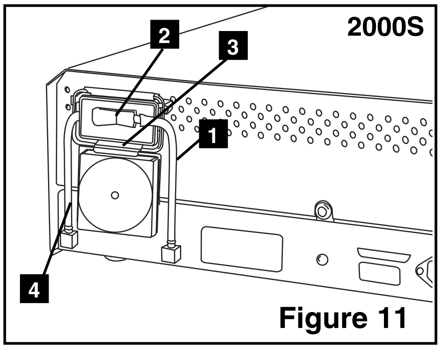

Figure 11

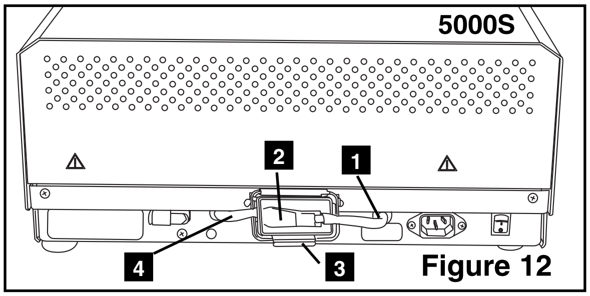

Figure 12

2. Disconnect tube A **1** from the bacteria retentive filter **2** and remove the filter from the filter bracket **3** . As you remove the filter from the bracket, note the orientation of the arrow mark on the filter.
3. When the filter is free of the bracket, carefully disconnect tube B **4** from the filter.
4. Before installing the replacement bacteria retentive filter **2** (SciCan order no. 01-102119S) check that the arrow mark on the filter matches the direction of the arrow on the bracket. Push the left hand filter fitting into tube B **4** .
5. Gently press the replacement filter into the filter bracket **3** . The arrow mark of the filter should be facing out and pointing to the left.
6. Re-connect tube A **1** to the right hand filter fitting.

5.7 Replacing the Cassette Seal

To ensure optimum performance of your Statim cassette autoclave, change the cassette seal every 500 cycles or every six months, whichever comes first. Replacement seals are available from SciCan (order number 01-100028S for Statim 2000S and 01-101649S for Statim 5000S).

To change the cassette seal, follow these steps:

Place the cassette lid and the new seal on a clean work surface. Examine the position of the old seal in the cassette lid and arrange the new seal in the same orientation, next to the lid.

Remove the old seal and discard. Clean any residue out of the seal channel and flush out the channel with distilled water.

Lubricate the new seal with the liquid seal lubricant provided.

Insert the rounded edge of the seal under the round lip of the lid. Align the holes in the new seal with the holes in the lid.

NOTE: At every corner and at the holes in the lid, two square nibs should be visible. The nibs should fit flush with the lid's outer surface.

Ensure the seal is completely inserted. Feel around the periphery to ensure the seal is securely in place.

NOTE: During a cycle, steam may appear between the lid and the tray. If this persists, remove the cassette and check that the seal is correctly installed.

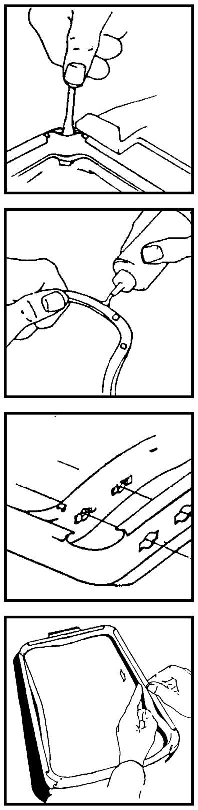

Figure 13

Be careful. The metal parts will be hot, and the cassette may contain hot steam.

5.8 Maintaining Fluid Levels

Use only steam-process distilled water containing less than 5 ppm total dissolved solids (having conductivity of less than 10 µS / cm) in the Statim. To fill the reservoir, remove the cap from the top of the unit and fill the reservoir. We recommend using a funnel to minimize spills. Each time you refill the reservoir, empty the waste bottle and refill with water to the MIN line. Empty the waste bottle often to avoid unpleasant odors and discoloration of the contents. (A low-level chlorine-free disinfectant, prepared according to the manufacturer's instructions, may be added to the waste bottle to remedy this situation).

5.9 Reading Water Quality

1. Power up unit while pressing the STOP button to access the User Setup menu.
2. Using the UNWRAPPED and WRAPPED buttons, scroll to Water Quality and select it by pressing the RUBBER AND PLASTIC button.

```
>Water Quality
CD=XXµS / yyy / z.z ppm
```

CD=conductivity

XX= micro S. value

yyy= engineering value

z.z= parts per million value

5.10 Preventative Maintenance Schedule

To ensure trouble-free performance, both the operator and the dealer must follow a preventative maintenance schedule. **NOTE**: Please refer to your National, Regional, State or Safety laws for any additional reoccurring user testing that may be required.

The schedules below describe the necessary actions.

Operator		
Daily	Water Reservoir	• Replace water as needed. • For opthalmic use, drain at the end of every workday, leave empty, and refill at the start of the next workday.
	Waste Bottle	• Empty the waste bottle every time you refill the water reservoir. • Fill the bottle with water, up to the MIN line marking. You may also add some chlorine-free disinfectant.
Weekly	Cassette	• Wash the interior of the cassette with dishwashing soap or a mild detergent that does not contain chlorine. • Scrub the inside with a cleaning pad designed for use with Teflon™-coated surfaces. • After removing all traces of the detergent, treat interior surfaces of the cassette with the STAT-DRI™ Plus drying agent to enhance the drying process. Order more STAT-DRI™ Plus from SciCan quoting 2OZPLUS, 8OZPLUST, or 32OZPLUS.
	Biological and/or Air Filter	• Check the filter for dirt and moisture. Replace if dirty. Call for service if wet.
	Water Filter	• Check the water reservoir filter every week and clean if necessary. Replace only if necessary.
Every 6 months	Cassette Seal	• Replace every 500 cycles or six months (whichever is first), or whenever necessary.
	Biological and/or Air Filter	• Replace every 500 cycles or six months (whichever is first).

Technician		
Once a year	Cassette	• Check the tray, lid and seal for damage. Replace if necessary.
	Biological Filter	• Inspect the biological filter for moisture.
	Solenoid Valve	• Inspect the valve and clean if dirty. Replace the plunger if defective.
	Pump	• Clean the filters, replace if dirty.
	Check Valve	• Remove the exhaust tube from the back of the unit during the air drying phase. Check for air coming from the fitting. • Remove the air compressor tube from the check valve inlet while running a cycle. Make sure no steam is leaking from the valve. Replace if there are any leaks.
	Water Reservoir	• Check the reservoir for dirt. Clean and rinse with steam process distilled water if necessary.
	Calibration	• Calibrate the unit.

6. The Communication Port

6.1 The RS232 Communication Port

All Statim units that do not have an internal printer will have an RS232 communication port that will allow you to connect to an external printer or to a SciCan Data Logger. For printing, you will need to purchase a recommended printer (see list below) from your local computer or electronics store. For data storage, you can purchase SciCan's USB Data Logger to record and store cycle information onto a mass storage device (MSD) such as a USB Flash Drive or SD memory card.

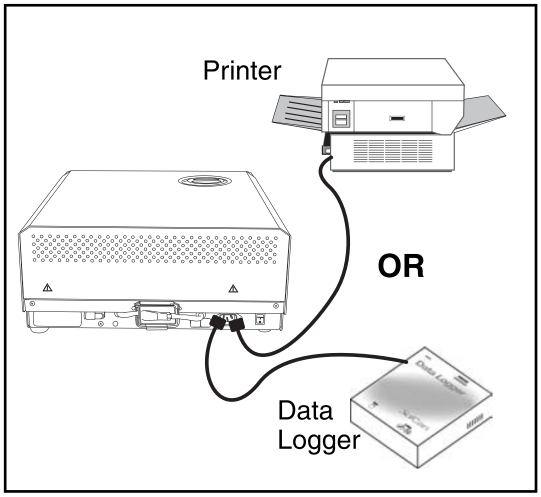

Printer Model	End Of Line CR/LF	Serial Port Bitrate	Printer user ° character
Epson TM-U220D (C31C515603)	CR/LF	9600	248 [0xF8]
Citizen IDP-3110-40 RF 120B	CR	9600	N/A
Star Micro SP212FD42-120	CR	9600	210 [0xd2]
Star Micro SP216FD41-120	CR/LF	9600	210 [0xd2]
Star Micro SP512MD42-R	CR/LF	9600	210 [0xd2]

SciCan Data Logger	End Of Line CR/LF	Serial Port Bitrate	Printer user ° character
For Mass Storage Device*	N/A	9600	32 [0xd2]

** Due to a variety of software programs/viewers that can be used to view the data files stored on a mass storage device such as a USB memory stick, we recommend the above settings.*

For your Statim to communicate to a specific device, you must enable this function through the User Setup menu. Follow the instructions in section 6.2 Installing the SciCan Data Logger below to enable communication to either an external printer or the SciCan Data Logger.

6.2 Installing the SciCan Data Logger

SciCan's USB Data Logger can record and store cycle information onto a mass storage device (MSD) such as a USB Flash Drive or SD memory card.

These instructions are for units with a 9-pin communication (RS232) port located at the back of the unit.

Follow the steps below before connecting the Data Logger.

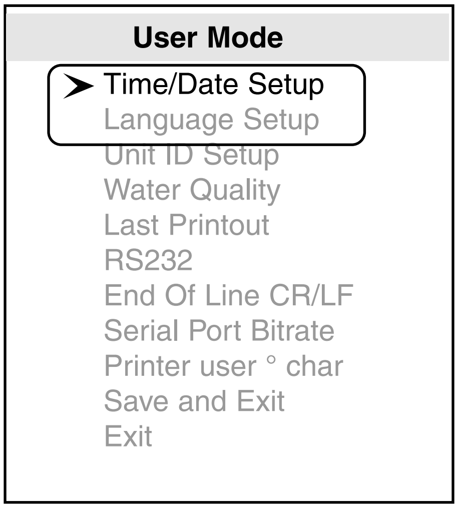
User Mode
➤ Time/Date Setup
Language Setup
Unit ID Setup
Water Quality
Last Printout
RS232
End Of Line CR/LF
Serial Port Bitrate
Printer user ° char
Save and Exit
Exit

User Setup Menu

To install the SciCan Data logger, access the user setup menu by powering up the unit while pressing the **STOP** button. Follow the instructions below to complete installation steps.

STEP 1

Selecting the USB Flash/MSD Option

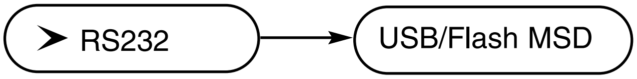
➤ RS232
USB/Flash MSD

1. Power up unit while pressing the **STOP** button to access the User Setup menu.
2. Using the UNWRAPPED and WRAPPED buttons, scroll to RS232 and select it by pressing the RUBBER AND PLASTIC button.
3. From the RS232 menu, use the UNWRAPPED and WRAPPED buttons to scroll down to the USB/FLASH MSD option and press the RUBBER AND PLASTIC button to select and return to the User Setup menu.

Setting the Serial Port Bitrate to 9600

➤ Serial Port Bitrate → 9600

1. From the User Setup menu, use the UNWRAPPED and WRAPPED buttons to scroll to the Serial Port Bitrate menu and select it using the RUBBER AND PLASTIC button.
2. From the Serial Port Bitrate menu, use the UNWRAPPED and WRAPPED buttons to scroll down to 9600 and press the RUBBER AND PLASTIC button to select and return to the User Setup menu.

Setting the Printer user Character; (example: 134°C)

➤ Printer user ° char → 32 [0x20]

1. From the User Setup menu, use the UNWRAPPED and WRAPPED buttons to scroll to the Printer user ° char menu and select it using the RUBBER AND PLASTIC button.
2. From the Printer user ° char menu, using the UNWRAPPED button to increase the displayed value by one, and the WRAPPED button to increase that value by ten, enter the value 32 [0x20] and press the RUBBER AND PLASTIC button to accept and return to the User Setup menu.

Save and Exit

➤ Save and Exit

A Save and Exit must be performed after the above settings are completed. If this is not done, the information will revert to its prior settings.

1. From the User Setup menu, use the UNWRAPPED and WRAPPED buttons to scroll to Save and Exit.
2. Select it by pressing the RUBBER AND PLASTIC button.

The LCD will display time and date information and a sequence of messages:

HH:MM DD/MM/YYYY

“MSD NOT DETECTED”/”INSERT MSD/FLASH”/”SELECT A CYCLE”

Step 2

Selecting the Time and Date

➤ Time/Date → HH:MM DD/MM/YYYY

Note: If the time and date were set according to section 3.6, this does not have to be performed again.

1. Power up unit while pressing the **STOP** button to access the User Setup menu.
2. Using UNWRAPPED and WRAPPED buttons, scroll to Time/Date Setup and press the RUBBER AND PLASTIC button to select it.
3. From the Time/Date Setup menu, set the time and date using the UNWRAPPED and WRAPPED buttons to change the displayed values and the RUBBER AND PLASTIC button to select. Press the **STOP** button when completed.

Step 3

Setting Unit ID

➤ Unit ID → 001

Note: If the unit ID was set according to section 3.8, this does not have to be performed again.

1. Power up unit while pressing the **STOP** button to access the User Setup menu.
2. Using the UNWRAPPED and WRAPPED buttons, scroll to the Unit ID Setup and press the RUBBER AND PLASTIC button to select it.
3. From the Setup Unit ID menu, use the UNWRAPPED and WRAPPED buttons to change the displayed values and the RUBBER AND PLASTIC button to select and move to the next digit. Press the **STOP** button when completed.

Step 4

Connecting the SciCan Data Logger

1. Ensure that both the Statim unit and the SciCan Data Logger are off.
2. Connect the SciCan Data Logger to the Statim unit by using the serial cable.
3. Power up the SciCan Data Logger
4. Power up the Statim unit.
5. The LCD will display the following sequence of messages:

HH:MM DD/MM/YYYY

“MSD NOT DETECTED”/”INSERT MSD/FLASH”/”SELECT A CYCLE”

6. Insert USB Flash Drive or SD memory card
7. After a few seconds the LCD will display the following sequence of messages:

HH:MM DD/MM/YYYY

USB/FLASH DETECTED/SAFELY REMOVE MSD/SELECT A CYCLE

6.3 Installing Paper on the Internal Printer

Use only paper approved for use with the optional internal printer on the Statim 5000S. The use of any other paper will damage the printer and will void the warranty. Thermal paper is available from SciCan (SciCan order no. 01-101657S).

Do not operate the printer without paper. If you run out of thermal paper, or if you do not wish to use the printer, turn it **OFF**.

Never pull the paper backwards through the printer.
This will damage the printer mechanism.

To install the paper into the printer, follow these steps:

1. Power the Statim 5000S **ON**.
2. Open the printer door 1 by pushing on the top half of the door.
3. Power the printer **ON**.
4. Unroll some paper from the thermal paper roll 3 and trim the corners using the paper cutting template included with each box.
5. Move the paper roll arm 4 into the loading position. Place the paper roll 3 on the arm so the paper strip feeds from the top of the roll and then carefully insert it into the paper feed slot 5 until it stops.

If the paper does not feed from the top, the heat sensitive side of the paper will not be in contact with the print head and the printer will not print.

6. With one hand, continue to gently feed the paper strip into the paper feed slot. With the other hand, press the paper advance button until the paper feeds by itself.

Keep the paper straight when feeding it into the printer or it may jam. Do not force the paper into the slot! If the paper will not feed into the slot, pre-cut the end of the roll again and reload the paper.

7. Continue to press the paper advance button 6 until the paper feeds through the paper exit slot on the front of the printer. Then, move the paper roll 3 and arm into the operating position and close the printer door 1 . The printer is now ready to operate.

When you see a red line on one side of the paper, it is time to replace the roll.

If a paper jam occurs, and the paper cannot be removed by pressing the paper advance button 6 , do not pull the paper backwards through the printer.

Never put a utensil or tool into the paper exit slot. For full instructions on how to remove paper jams, see section 6.4 Removing Internal Printer Paper Jams.

To replace the paper roll 3 , follow these steps:

1. With scissors, cut the paper between the roll and the paper feed slot 5 .
2. Remove the roll from the arm and discard the unused portion.
3. Press the paper advance button 6 to feed the paper that remains in the printer out of the slot at the front of the printer.
4. Install the new thermal paper roll by following the instructions described in this section.

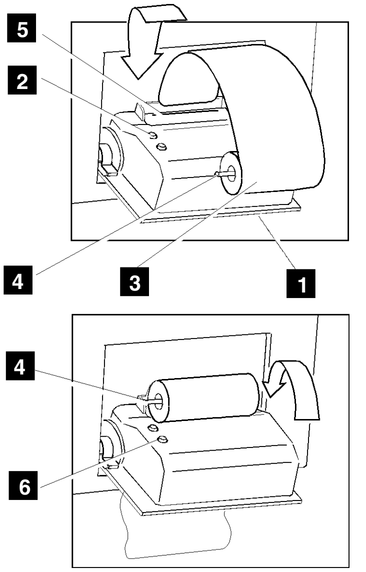

Figure 15.1

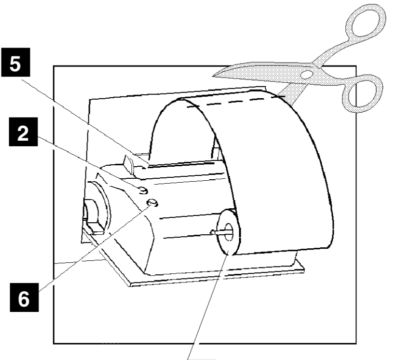

Figure 15.2

6.4 Removing Internal Printer Paper Jams

If paper jams in the printer and cannot be removed by pressing the paper advance button 6, the printer must be disassembled. Do not pull the paper backwards through the printer and never put utensils or tools into the paper exit slot.

When paper is jammed in the printer, follow these steps to remove the jam:

1. Power the Statim 5000S **OFF** and unplug the unit.
2. Using scissors, cut the paper between the roll and the paper feed slot 5.
3. Remove the paper roll 3 from the paper roll arm 4 and leave the arm in the loading position.
4. Using a #1 Phillips screwdriver, remove the three screws 7 from the printer cover 8 and remove the cover.
5. Note the orientation of the exposed printed wiring board and the paper roll arm 4 assembled on the printer door 1.

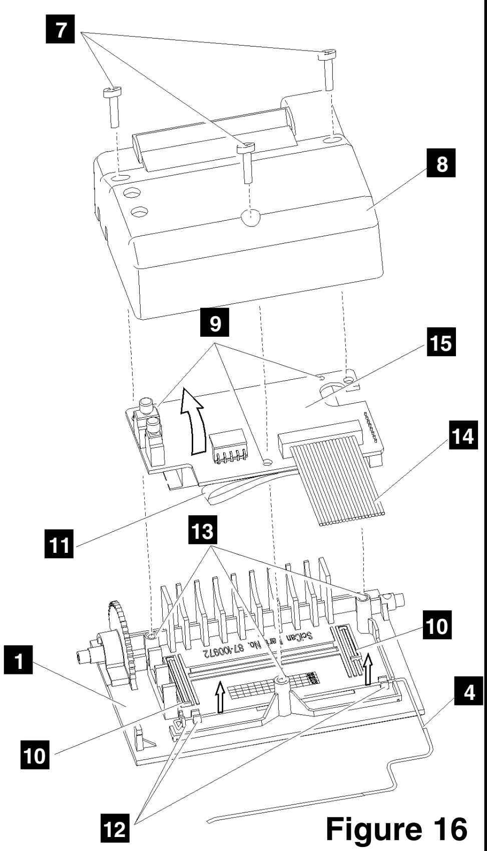

Figure 16

6. Gently lift the printed wiring board upwards and away from the printer door. Exercise care while handling the board. The printer is integral to the wiring board. Do not place strain on the connections of the ribbon cable soldered to the board. Do not remove the connector of the flexible cable from the connector header on the board. The paper drive mechanism on the underside of the wiring board is now exposed.
7. Using a pair of tweezers or fine needle-nosed pliers, carefully remove the paper from the mechanism.

When the paper is removed, reassemble the printer:

1. Carefully snap the paper roll holder, in the loading position, back into the clips on the printer door 1 .

6. The Communication Port con't.

2. Place the printed wiring board back into position on the printer door. Note the alignment of the mounting holes 9 in the wiring board and the mounting bosses 13 on the printer door. The black plastic printer body rests between the locating ribs 10 on the inside of the printer door.
3. Ensure that the flexible cables 11, 14 are not pinched between the printer door and the wiring board.
4. Place the printer cover on the printer door. Ensure that the flexible cables are not pinched between the cover and the door. The power button and the paper advance button must protrude through the openings in the cover and operate freely.
5. Using a #1 Phillips screwdriver, secure the printer cover to the printer door with the three screws retained during the disassembly procedure. Do not over-tighten these screws.
6. Plug your Statim 2000S / 5000S into the wall receptacle. Reconnect the printer if it was previously disconnected. Turn the power switch to the **ON** position.
7. Press the printer power button to the **ON** position. Load paper into the printer following the procedures in section 7.3 Installing Paper on the Internal Printer.

6.5 Cycle Printout Overview

1. Model: STATIM 2000 software: S2S2R410
2. Unit Identifier: autoclave has been set up as number 323
3. Cycle counter: the number of cycles having been run on the unit = 9
4. Time / Date: 1:38 pm 14th April, 2003
5. Cycle Name: SOLID UNWRAPPED (N)
6. Cycle Name cont'd – parameters: 134˚C / 3.5 min – 1P
7. Cycle clock: starting at 0:00
8. Warm up complete: start of the conditioning phase is 2:07 (see cycle graph – 'A' phase complete, start of 'B' phase)
9. Peek Temp. / Press. & Time of conditioning purge: for each purge (number of lines based on cycle selection – this is a one purge cycle – activity within 'B' phase)
10. Lowest Temp. / Press. & Time of conditioning purge: for each purge (number of lines based on cycle selection – this is a one purge cycle – activity within 'B' phase)

```
1.   STATIM 2000  S2S2R410
2.   Unit #  :         323
3.   CYCLE  NUMBER  000009
4.   13:38      14/04/2003
5.   S0LID  UNWRAPPED (N)
6.   134°C  /  3.5 min
7.   CYCLE  START     0:00
8.   CONDITIONING     2:07
9.   132.9°C 294KPa   3:06
10.  115.0°C 150KPa   3:06
11.  PRESSURIZING     3:21
12.  STERILIZING      4:12
13.  135.6°C 313KPa   4:12
14.  Min.  steri.  Values:
15.  135.1°C 308KPa
16.  Max.  steri.  Values:
17.  136.7°C 323KPa
18.  135.9°C 316KPa   7:43
19.  VENTING          7:43
20.  STERILIZING COMPLETE
21.  AIR DRYING       8:07
22.  STOP BUTTON PRESSED
23.  CHECK FOR DRYNESS
```

11. Start Time of Pressurization: 3:21(start of ‘C’ phase)
12. Start Time of Sterilization: 4:12 (start of ‘D’ phase)
13. Temp. / Press. & Time at start of sterilization (‘D’ phase)
14. Min. Temp. / Press during the sterilization phase (lower limits of ‘D’ phase)
15. 135.1˚C 308 kPa
16. Max. Temp. / Press during the sterilization phase (upper limits of ‘D’ phase)
17. 136.7˚C 323 kPa
18. Temp. / Press. & Time of end of sterilization phase (end of ‘D’ phase)
19. Time Venting started: 7:43 (start of ‘E’ phase)
20. Sterilization was successfully completed
21. Time Air Drying started: 8:07 (start of ‘F’ phase)
22. Cycle was stopped by user
23. Drying cycle aborted prior to completion, load may not be dry

7. Troubleshooting

Problem	**Solution**
Unit does not power **ON**.	Check that the unit is plugged into a properly grounded outlet and that the power cord is firmly seated at the rear of the machine. Try another circuit. Power unit **OFF** for 10 seconds and then power **ON** again. Check the condition of the line circuit breaker or fuse.
There is water under the machine. ⚠ ⚠	Check that water was not spilled when refilling the reservoir. Make sure the plug in the exhaust tube is secured. Remove and reinsert the cassette . Attempt another cycle. ⚠ Be careful. The metal parts will be hot, and the cassette will contain hot steam. The cassette is leaking. If water drips from the underside of the unit during operation, check the cassette seal for misalignment or damage and replace the seal if required. ⚠ Be careful. The metal parts will be hot, and the cassette will contain hot steam. Attempt another cycle. If it still leaks attempt another cycle using a different cassette if possible. If the leak persists, turn the unit **OFF**, remove and unload the cassette, unplug the unit, and call your dealer.
Instruments do not dry.	Best drying occurs when the cycle continues to completion. Allow the cycle to finish. Make sure the instruments are loaded correctly in the cassette. Refer to section 4.4 Preparing and Loading Instruments. Check the unit leveling. Clean the inside of the cassette and treat with Stat-Dri drying agent. Refer to section 5.1 Cleaning the Cassette. Examine the exhaust tube (tube to the waste bottle) for kinks.

7. Troubleshooting con’t.

	If kinked, straighten the tube. If the tube cannot be straightened, remove it from the push-in fitting attached to the Statim. Depress the collar on the fitting and with the other hand pull firmly on the tube. Once the tube is free of the fitting, cut the damaged section of tubing away using a sharp instrument. Be sure that you leave enough tube to reach the unit when you re-attach the tube to the exhaust fitting. If the tube is too short to remove a section, contact your SciCan dealer fora replacement. Make sure the compressor is working. To check, remove the exhaust tube from the waste bottle. Start the Air Drying Only Cycle, and place the free end into a glass of water. If there is not a strong, steady flow of bubbles, the compressor is not functioning properly. Contact your SciCan dealer.
Cycle interrupted — NOT STERILE, Cycle aborted — NOT STERILE and CYCLE FAULT messages. ⚠	Wait a few minutes and attempt another cycle before proceeding to the next solution. Remove the cassette. Be careful. The metal parts will be hot and the cassette will contain hot steam. Inspect the cassette to ensure that the holes in the back of the seal are perfectly aligned, and that the flexible lip of the seal is completely free. Check the exhaust tube for kinks or obstructions. If kinked, straighten the tube. If the tube cannot be straightened, remove it from the push-in fitting attached to the Statim. Depress the collar on the fitting and, with the other hand pull firmly on the tube. Once the tube is free of the fitting, cut the damaged section of tubing away using a sharp instrument. Be sure that you leave enough tube to reach the unit when you re-attach the tube to the exhaust fitting. If the tube is too short to remove a section, contact your SciCan dealer for a replacement. Check that the Statim has not inadvertently been exposed to any electrical interference. Refer to the Installation section dealing with Environmental Considerations. (Section 3.1) Try running another cycle. If the problem persists, record the cycle fault message number and contact your dealer.

7. Troubleshooting con't.

Excessive steam issuing from the front of the machine. ⚠	Remove and reinsert the cassette. Attempt another cycle. Remove and check the cassette seal for misalignment or damage. Replace the seal if required. Be careful as the metal parts will be hot and the cassette will contain hot steam. If the leak persists, turn the unit **OFF**, remove and unload the cassette and contact your SciCan dealer.
Message WATER QUALITY IS NOT ACCEPTABLE. Machine will not start.	You have used water which is not steam-process distilled or is improperly distilled. Empty the reservoir and refill with steam-process distilled water containing less than 5 ppm total disolved solids (having conductivity of less than 10 µS / cm). If you have the water conductivity meter, check the quality of the water before refilling the reservoir. Refer to the steps described in section 3.9 Shipping the Unit to empty the reservoir.
Message REFILL RESERVOIR, Machine will not start.	The level of the water in the reservoir is low. Refill the reservoir. Refer to the steps described in section 3.4 Filling the Reservoir.
Message PRINTER FAULT displayed on LCD Printer is not printing.	Check for a paper jam. If the paper is jammed, follow the paper removal procedures outlined in section 6.4. Power unit **OFF** for 10 seconds and then power **ON** again. If the paper is still jammed, follow the disassembly procedures outlined in section 6.4 Removing Paper Jams.
The printer does not work.	Make sure that the printer cable is connected securely with the connector on the back of the Statim and the Statprinter. Make sure that the printer is powered **ON**. Power unit **OFF** for 10 seconds and then power **ON** again.
The printer appears to work, but nothing is printed on the paper.	Ensure that the paper is loaded properly (refer to section 6.3 Installing Paper on the Internal Printer). Check to see that the paper leaves the paper roll from the top of the roll. This means that the treated surface of the coated thermal paper will be in contact with the thermal print head.
Time and date are incorrect.	The time and date have not been set. See section 3.6 Setting the Time and Date.

Message MSD NOT CONNECTED <> INSERT MSD/FLASH	Check the serial cable connection. Check the power connection. Ensure the lower red LED is lit. Check that the Mass Storage Device is properly inserted. Repeat the instructions for **Installing the SciCan Data Logger on your Statim.**
Message MSD/FLASH FULL <> REPLACE MSD	The MSD is full. Export the data.
Message Missing lines of Data on MSD/FLASH	Refer to the STATIM screen to confirm successful sterilization. Reset the Data Logger by unplugging its power, disconnecting the MSD and waiting 10 seconds. Then reconnect the power adapter and insert the MSD into the Data Logger. If the problem persists, contact the SciCan Service Center.
Message: The file or directory in the MSD is corrupted or unreadable.	Refer to the STATIM screen to confirm successful sterilization. The MSD may have been unplugged while data was being written to it. The MSD should not be unplugged until after “SAFELY REMOVE MSD <> MSD/FLASH DETECTED” is displayed. The corrupted files or directories may be lost. Reformat the MSD on your computer.

8. Spare Parts List

01-100204S	Exhaust Tube
01-100724S	Condenser Bottle w / o Condenser
01-100735S	Waste Water Bottle Fitting
01-100780S	Bumper
01-100782S	Push-In Fitting (2000S)
01-100812S	Condenser Bottle
01-100834S	Cassette Lid (2000S)
01-101649S	Cassette Seal (5000S)
01-101657S	Thermal Paper (Box of 10 rolls)
01-101658S	Cassette Handles
01-101709S	Mesh Rack (5000S)
01-101755S	Push-In Fitting (5000S)
01-101757S	Cassette Lid w / Box (5000S)
01-101766S	Power Cord UK
01-101768S	Power Cord Switzerland
01-101769S	Power Cord Italy
01-101779S	Power Cord Europe
01-106030S	Cassette Lid Handle (2000S)
01-106071S	Extended Cassette Lid Handle (5000S)
01-104093S	Exhaust Tube 3 m long
01-101783S	Reservoir Cap and Filter
01-101970S	Data Cable (5000S)
01-102119S	Filter Biological
01-103139S	Conductivity Meter
01-103475S	Tray (2000S)
01-103557S	Power Cord Repl. Denmark (det.)
01-103865S	Seal Lubricant
01-103945S	Rack-Tray Unwrapped Instr. Kit (2000S)
01-104343S	Plug - Drain Tubing (5000S)
01-104472S	Extended Cassette Handles (5000S)
01-104696S	Handpiece Adapter
01-104697S	Adapter Cassette Seal (2000S)
01-104698S	Adapter Cassette Seal (5000S)
01-104699S	Seal Insert

01-100207S	Compressor Filter (2000S)
01-104700S	Adapter Cassette O-Ring Kit
01-104702S	Adapter Cassette Lid (2000S)
01-104704S	Adapter Cassette Lid (5000S)
01-104786S	Instrument Holder - 4 mm (5000S)
01-100028S	Cassette Seal (2000S)
01-106438S	Cassette Lid, Extended (2000S)
01-108340S	Statim PCD – spare parts
01-109300S	Water Reservoir Filter Kit

ACCESSORIES	
01-100008A	Kit Cassette Final (2000S)
01-100271A	Kit Tray Cassette w / Mesh (2000S)
01-101613S	Cassette Complete (5000S)
01-101614S	Tray Complete (5000S) with Box
01-103923	Condenser Additional Bottle
01-103935	STATDRI Plates (5000S)
01-104104	Extended Length Cassette (5000S)
01-104499	Extended Cassette Instrument Rack (5000S)
01-104701	Adapter Cassette (2000S)
01-104703	Adapter Cassette (5000S)
01-106101	Handpiece Adapter Kit (2000S)
01-106102	Handpiece Adapter Kit (5000S)
01-106653	Mesh Tray (2000S)
01-210000	Kit Printer (5000S)
01-106325	Container Endoscope Complete (5000S)
2OZPLUS	STAT-dri 2 oz.
8OZPLUST	STAT-dri 8 oz.
32OZPLUS	STAT-dri 32 oz.
99-108332	Chemical Emulator 134˚C/3.5 min
01-108341	Statim PCD Final Assembly Kit

9. Warranty

Limited Warranty

For a period of one year, **SciCan** guarantees that the **Statim 2000S / 5000S**, when manufactured by **SciCan** in new and unused condition, will not fail during normal service due to defects in material and workmanship that are not due to apparent abuse, misuse, or accident.

The one year warranty will cover the performance of all components of the unit except consumables such as the cassette seal, the compressor filter and the microbiological filter, provided that the product is being used and maintained according to the description in the user's manual.

A two-year warranty will be applied specifically to the water pump, steam generator, and printed circuit board (PCB) provided that the product is being used and maintained according to the description in the user's manual.

In the event of failure due to such defects during this period of time, the exclusive remedies shall be repair or replacement, at **SciCan's** option and without charge, of any defected part(s) (except gasket), provided **SciCan** is notified in writing within thirty(30) days of the date of such a failure and further provided that the defective part(s) are returned to **SciCan** prepaid.

This warranty shall be considered to be validated, if the product is accompanied by the original purchase invoice from the authorized **SciCan** dealer, and such invoice identifies the item by serial number and clearly states the date of purchase. No other validation is acceptable. After one year, all **SciCan's** warranties and other duties with respect to the quality of the product shall be conclusively presumed to have been satisfied, all liability therefore shall terminate, and no action or breach of any such warranty or duty may thereafter be commenced against **SciCan**.

Any express warranty not provided hereon and any implied warranty or representation as to performance, and any remedy for breach of contract which, but for this provision, might arise by implication, operation of law, custom of trade or course of dealing , including any implied warranty of merchantability or of fitness for particular purpose with respect to all and any products manufactured by **SciCan** is excluded and disclaimed by **SciCan**. If you would like to learn more about **SciCan** products and features, visit our website at **www.scican.com**.

10. Test Protocol

10.1 Type test

STATIM 2000S/5000S	CYCLES						
Type Test	SOLID UNWRAPPED (N) 134°C / 3.5 min	HOLLOW **UN**WRAPPED (S) 134°C / 3.5 min	HOLLOW **UN**WRAPPED (S) 134°C / **18** min	HOLLOW WRAPPED (S) 134°C / 3.5 min	HOLLOW WRAPPED (S) 134°C / 18 min	RUBBER/PLASTIC (S) 121°C / 15 min	RUBBER/PLASTIC (S) 121°C / 30 min
Dynamic chamber		X	X	X	X	X	X
Empty chamber	X	X	X	X	X	X	X
Solid load — unwrapped	X	X	X	X	X	X	X
Solid load — single wrapped		X	X	X	X	X	X
Hollow load B		X	X	X	X	X	X
Dryness, solid load — unwrapped	X	X	X	X	X	X	X
Dryness, solid load — single wrapped		X	X	X	X		
Residual air	X	X	X	X	X	X	X
Additional Tests							
STATIM 2000S/5000S PCD * (01-108341)				X			
Microbiological Tests							
For Specific Medical Devices - SEE LIST BELOW							

Maximum Load							
2000S	1 Kg.	1 Kg.	1 Kg.	1 Kg.	1 Kg.	0.4 Kg.	0.4 Kg.
5000S	1.5 Kg.	1.5 Kg.	1.5 Kg.	1.5 Kg.	1.5 Kg.	0.4 Kg.	0.4 Kg.

Make - Model	Cycle
Dental Item	
W&H-Trend LS, WD-56	HOLLOW UNWRAPPED (S) 134˚C / 3.5 min
W&H-Trend HS, TC-95RM	HOLLOW UNWRAPPED (S) 134˚C / 3.5 min
KaVo-Super-Torque LUX/640 B	HOLLOW UNWRAPPED (S) 134˚C / 3.5 min
KaVo-INTRAmatic LUX3, 20 LH	HOLLOW UNWRAPPED (S) 134˚C / 3.5 min
KaVo-GENTLEforce 7000C	HOLLOW UNWRAPPED (S) 134˚C / 3.5 min
NSK-PANA AIR	HOLLOW UNWRAPPED (S) 134˚C / 3.5 min
NSK-ATL118040	HOLLOW UNWRAPPED (S) 134˚C / 3.5 min
STAR-430 SWL	HOLLOW UNWRAPPED (S) 134˚C / 3.5 min
Sirona-T1 Classic, S 40 L	HOLLOW UNWRAPPED (S) 134˚C / 3.5 min
Sirona-T1 Control, TC3	HOLLOW UNWRAPPED (S) 134˚C / 3.5 min
Midwest-Tradition	HOLLOW UNWRAPPED (S) 134˚C / 3.5 min
Medical Item	
B & L Ophthalmology instruments	
Gimble irrigating cannula 30g E4894	HOLLOW UNWRAPPED (S) 134˚C / 3.5 min
Lasik cannula E4989	HOLLOW UNWRAPPED (S) 134˚C / 3.5 min
Gillis irrigating-aspirating cannula E4932	HOLLOW UNWRAPPED (S) 134˚C / 3.5 min
Nichamin hydrossection cannula 26g E4421 H	HOLLOW UNWRAPPED (S) 134˚C / 3.5 min
Irrigating-aspirating handpiece MVS 1063C	HOLLOW UNWRAPPED (S) 134˚C / 3.5 min
Rudolf Medizintechnik GmbH Endoscope accessories	
Trocar sleeve, arthroscopy, 2 rotating stop cocks, 1.7 mm dia x 104 mm length 10-0008-00	HOLLOW UNWRAPPED (S) 134˚C / 3.5 min
Trocar sleeve, hysteroscopy diagnostic sheath, 1 fixed stop cock, 2.7 mm dia x 302 mm length 10-0049-00	HOLLOW UNWRAPPED (S) 134˚C / 3.5 min
Alcon ophthalmic handpiece	
NeoSonix Phaco handpiece	HOLLOW UNWRAPPED (S) 134˚C / 3.5 min
Miltex medical instruments	
Frazier needle 26-778	HOLLOW UNWRAPPED (S) 134˚C / 3.5 min
Yeoman biopsy forceps with rotating shaft 28-304 **(Yeoman forceps in 5000S unit only – size restriction)**	HOLLOW UNWRAPPED (S) 134˚C / 3.5 min
Kerrison rongeur 18-1994	HOLLOW UNWRAPPED (S) 134˚C / 3.5 min
Frazier-Ferguson tube 19-570	HOLLOW UNWRAPPED (S) 134˚C / 3.5 min
Yankauer suction tube 2-104SS	HOLLOW UNWRAPPED (S) 134˚C / 3.5 min
Menghini biopsy needle 13-150	HOLLOW UNWRAPPED (S) 134˚C / 3.5 min
Becton Dickinson	
Needle, 30G1	HOLLOW UNWRAPPED (S) 134˚C / 3.5 min
Medical Workshop	
Hockeystick Forceps, membrane peeling mw-1925	HOLLOW UNWRAPPED (S) 134˚C / 3.5 min

*
1. The PCD (Process Challenge Device) was designed exclusively for use in the Statim 2000S and Statim 5000S autoclaves.
2. The PCD is not for use with the Statim 5000 or Statim 5000S Extended Cassette.
3. PCD specification available upon request.
4. Hollow load A test not applicable – rationale available upon request.

10. Test Protocol con’t.

Cycle	STATIM 2000S	STATIM 5000S
	Cold Unit With Max. Load + Drying Phase	Cold Unit With Max. Load + Drying Phase
	Warm Unit Without Load + Drying Phase	Warm Unit Without Load + Drying Phase
SOLID UNWRAPPED (N) 134˚C / 3.5 min	9:15 + 60:00	13:15 + 60:00
	6:45 + 60:00	8:45 + 60:00
HOLLOW UNWRAPPED (S) 134˚C / 3.5 min	11:45 + 60:00	17:30 + 60:00
	8:05 + 60:00	10:50 + 60:00
HOLLOW UNWRAPPED (S) 134˚C / 18 min	26:15 + 60:00	32:00 + 60:00
	22:35 + 60:00	25:20 + 60:00
HOLLOW WRAPPED (S) 134˚C / 3.5 min	15:35 + 60:00	24:00 + 60:00
	10:40 + 60:00	15:30 + 60:00
HOLLOW WRAPPED (S) 134˚C / 18 min	30:05 + 60:00	38:30 + 60:00
	25:10 + 60:00	30:00 + 60:00
RUBBER / PLASTIC (S) 121˚C / 15 min	20:15 + 60:00	22:50 + 60:00
	18:40 + 60:00	20:20 + 60:00
RUBBER / PLASTIC (S) 121˚C / 30 min	35:15 + 60:00	37:50 + 60:00
	33:40 + 60:00	35:20 + 60:00

11. Specifications

11.1 Statim 2000S — Specifications

Machine Dimensions:	Length:	48.5 cm
	Width:	41.5 cm
	Height:	15 cm
Cassette Size (External)**:**	Length:	41 cm (includes handles)
	Width:	19.5 cm
	Height:	4 cm
Cassette Size (Internal)**:**	Length:	28 cm
	Width:	18 cm
	Height:	4 cm
Sterilization Chamber Volume:		1.8 L
Reservoir Volume:		4.0 L
Weight (Without water)**:**		21 kg
Clearance required:		
	Top:	5 cm
	Sides:	5 cm
	Back:	5 cm
	Front:	48 cm
Clearance required for movement of the door(s):		48 cm
Minimum charge in the water reservoir:		550 mL
PRV value (pressure relief valve):		43.5 PSI
Electrical Rating:		220 - 240 V, 50/60 Hz, 6 A
Current:		AC
Protection Class:		I
Protection:		covered
Ambient Operating Temperature:		5˚C - 40˚C
Sound levels:		Mean - 56 dB, Peak - 65 dB
Humidity:		80% Max.
Max. Altitude:		2000 m

11.2 Statim 5000S — Specifications

Machine Dimensions:	Length:	55 cm
	Width:	41 cm
	Height:	19 cm
Cassette Size (External)**:**	Length:	49.5 cm (includes handles)
	Width:	19.5 cm
	Height:	8 cm
Cassette Size (Internal)**:**	Length:	38 cm
	Width:	18 cm
	Height:	8 cm
Sterilization Chamber Volume:		5.1 L
Reservoir Volume:		4.0 L
Weight (Without water):		33 kg
Clearance required:		
	Top:	5 cm
	Sides:	5 cm
	Back:	5 cm
	Front:	57 cm
Clearance required for movement of the door(s):		57 cm
Minimum charge in the water reservoir:		550 mL
PRV value (pressure relief valve):		43.5 PSI
Electrical Rating:		220 - 240 V, 50/60 Hz, 6 A
Current:		AC
Protection Class:		I
Protection:		covered
Ambient Operating Temperature:		5˚C - 40˚C
Sound levels:		Mean - 57 dB, Peak - 65 dB
Humidity:		80 % Max.
Max. Altitude:		2000 m
Optional Internal Printer Specifications:		
Type:		Thermal Printer
Print:		20 characters per line
Print Speed:		1 line per second
Paper Roll Capacity: approx.		80 sterilization cycles per roll