OLIVER®

PRODUCTS COMPANY

GRAND RAPIDS, MICHIGAN, U.S.A. 49504-5298

USERS OPERATING AND INSTRUCTION MANUAL

MODEL 2003

VARIABLE SLICE THICKNESS
BREAD SLICER

S20000-CVR

INDEX

REV. 03-25-98

SAFETY INSTRUCTIONS

Various safety devices and methods of guarding have been provided on this machine. It is essential, however, that machine operators and maintenance personnel observe the following safety precautions. Improper installation or operation of this equipment may cause injury to personnel or damage to equipment.

1. Read this manual before attempting to operate your machine. Never allow an untrained person to operate or service this machine.

2. Connect the machine to a properly grounded electrical supply that matches the requirements shown on the electrical specification plate and follow specifications of local electrical codes.

3. Disconnect and lock-out the machine from the power supply before cleaning or servicing.

4. Check and secure all guards before starting the machine.

5. Observe all caution and warning labels affixed to the machine.

6. Use only proper replacement parts.

7. Do not wear loose fitting clothing or loose hair. Shirt tails should be tucked in.

8. Wear proper personal safety equipment.

9. Keep Hands away form the moving parts of this machine while it is in operation.

10. In addition to these general safety instructions, also follow the more specific safety instructions given for the different areas of the machine in the operating instructions.

WARNING

DO NOT USE FOR OTHER THAN ORIGINALLY INTENDED PURPOSE

DESCRIPTION/SPECIFICATION

Description

The Oliver Model 2003 is a variable slice thickness bread slicer which utilizes a new and innovative way to slice bread. The bread is moved past a circular blade which is mounted to a moving arm, cutting each slice individually to whatever thickness is selected. The slicer is designed for on-demand slicing allowing your customers to choose a slice thickness which satisfies their needs.

The slicer employs a disc brake on the blade drive motor which mechanically engages to stop the blade whenever the blade is exposed due to a door being opened, or after the slicing cycle is finished.

Note

This machine is not intended to be used for slicing warm, sticky, nut and/or fruit breads.

Physical specifications

Product Capacities:
The slicer will process loaves up to 9 inches by 4-1/4 inches by 15 inches long.

Overall Machine size:
Width = 36 inches
Height = 28-1/2 inches, 48-1/2 inches with Blade Guard all the way open.
Depth = 24 inches, 36-1/4 inches with Blade Guard all the way open.

Net Weight:
Approximately 360 pounds.

Shipping Weight:
Approximately 375 pounds.

Slice Thickness:
3/8, 7/16, 1/2, 5/8, 3/4, 7/8, 1, and 1-1/2 inches.

Electrics:
3/4 Horse Power, 1 phase, 50/60 hertz, 115 Volts AC, 13 Amps,
(20 Amp Dedicated Circuit).
3/4 Horse Power, 1 phase, 50/60 hertz, 230 Volts AC, 6.5 Amps,
(10 Amp Dedicated Circuit).

REV. 07-29-96

OVERALL MACHINE DIMENSIONS

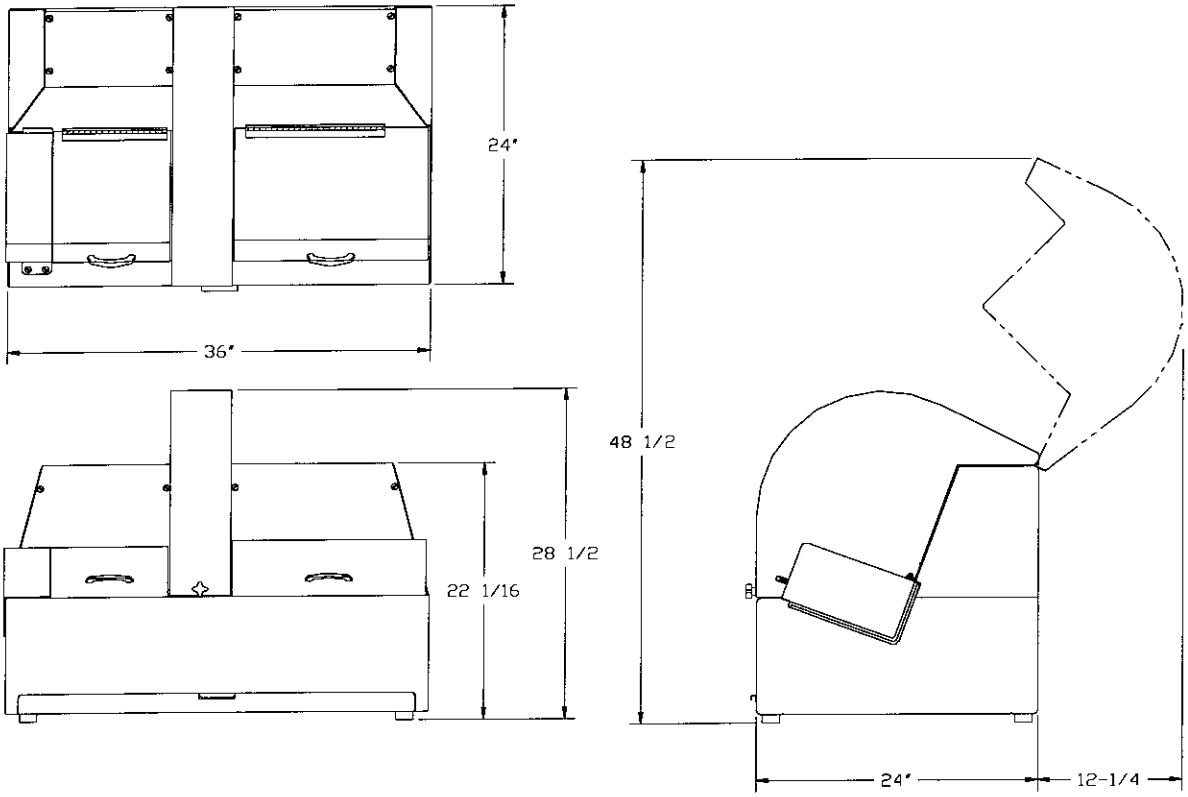

Rev. 12-15-95

OPERATING INSTRUCTIONS

1. Automatic Diagnostic Check:

Close both doors. Turn the machine on by pushing the power switch to the on position. The machine will automatically perform a diagnostic check on the end and home proximity sensors (PS). You should observe the pusher going to its "home" (left) and "end" (right) limits. the pusher will finish at the home position. You may then begin standard operation.

2. Standard Operation:

- Upon a successful completion of the diagnostic check, the machine is ready for slicing.
- Hold open the left door with left hand.
- Place loaf on table.
- Slide loaf left onto the pins on the pusher so that pins penetrate the loaf, until it is firmly against the back of the pusher.
- Close door'(s).

Note

Machine will not operate if either door is open.

- Select the appropriate thickness setting.
- Press **START** in the **PUSHER CONTROL** area of the panel.
- Wait for bread to be sliced. After the final slice, the bread will be in the right hand compartment.
- Open the right hand door and remove the loaf.
- Replace the heal holder on the table. Move it as far to the left as the cable assembly will allow. Close the door.
- Repeat above steps for each loaf.

Rev. 12-15-95

3. Stopping:

If a slice gets jammed, press **STOP**, (in the **PUSHER CONTROL** area), to stop slicing, turn power off, disconnect and lock-out machine before trying to clear the machine.

Pressing **STOP** twice will stop slicing and return the pusher to the home position.

CAUTION

Do not open doors while slicer is operating. Doing so will cause slicing to stop.

REV. 12-15-95

MAINTENANCE

WARNING

DISCONNECT AND LOCK OUT THE MACHINE FROM THE POWER SUPPLY BEFORE CLEANING OR SERVICING. REMEMBER TO USE CARE WHENEVER YOU ARE WORKING NEAR THE BLADE.

1. Cleaning:

Use a mild detergent solution applied with a cloth or spray cleaner on all exterior and interior surfaces as necessary. Remove and empty contents of the crumb tray daily. Periodically remove the blade and clean the blade compartment.

The blade must be cleaned each day, you Do Not need to remove the blade for this. Use a mild detergent solution or spray cleaner. For harder deposits use a non scratch cleaning pad similar to Scotch-brite (tm).

2. Lubrication:

all motors and bearings are pre-lubricated and sealed, lubrication in not required. Do Not attempt to oil or grease the motor.

3. Changing a blade:

WARNING

DISCONNECT AND LOCK OUT THE MACHINE FROM THE POWER SUPPLY BEFORE CLEANING OR SERVICING. REMEMBER TO USE CARE WHENEVER YOU ARE WORKING NEAR THE BLADE.

- Lift the blade guard after removing the knob, (located at the bottom front edge of the guard), which holds it in place. Gently lift the hinged blade guard, resting it all the way open. Use the flip-out prop to hold it in that position.
- Remove the blade mounting screw using a 1/2 inch wrench.
- Remove the lockwasher, special washer, 2 inch diameter collar, and the circular knife.
- The blade is replaced by reversing the above procedure.
- When reinstalling the blade, make sure the beveled side faces the outfeed (FLAT SIDE TOWARD INFEED). Make sure the blade is centered and supported on the arbor.

Rev. 12-15-95

TROUBLESHOOTING GUIDE

WARNING

DISCONNECT AND LOCK OUT THE MACHINE FROM THE POWER SUPPLY BEFORE SERVICING.

WARNING

TROUBLESHOOTING OF ELECTRICAL EQUIPMENT MUST BE PERFORMED BY QUALIFIED PERSONNEL ONLY.

Software on the 2003 is continually performing diagnostic checks on itself. The first diagnostic check occurs when the machine is first turned on.

STARTUP

1. The pusher returns until the "Home" proximity sensor is reached.
2. The pusher advances until it reaches the "End Travel" proximity sensor.
3. The pusher returns to the home position.

ERROR CODE DISPLAY

Other checks are made each time a loaf of bread is sliced. The LED display will show a code of Ec to Ec05 after a switch, sensor, or mechanical failure.

Ec01 - Severe Travel Error

- The pusher is jammed. Remove any obstruction. May also be caused by bent or dirty pins on the pusher which can restrict their movement in the pusher block.
- The proximity flag mounted on top of the pusher is to far away from the "End Travel" proximity switch.
- The "Pusher Bracket" track is filled near the pin end with a crumb buildup which is preventing the pusher from reaching the "Home" proximity sensor.
- Either the "End Travel" or the "Home" proximity sensor is malfunctioning. Check the sensors. See Diagnostic Mode section - Test #1 (page 2003S20005-6)
- Pusher motor/drive has malfunctioned. Check for failed stepper motor, loose set screws, or a broken or loose pusher drive belt.

ERROR CODE DISPLAY- Continued

Ec03- Product Detect Scanner Error

- The "Product Detect" scanner sensor has failed.

Ec04- Home Proximity Switch Error

- The pusher in not being allowed to return far enough to contact the "Home" proximity switch. Check for bread or crumb built up behind the pusher or between the pusher pin plate and the pusher block.
- The proximity flag mounted on top of the pusher is to far away from the "Home" proximity switch.
- The "Home" proximity sensor is malfunctioning. To check the sensor See Diagnostic Mode section - Test #1 (page 2003S20005-6).

Ec05- Clutch Time-out

- Check the circuit breaker, "1CB" located on the lower right hand rear corner of the machine, below the electrical panel cover and reset if required.
- Wrong size extension cord is being used, (too small of wire gage for length required), or, machine is on a non-dedicated circuit.
- The proximity flag mounted beneath the "Blade Arm" is to far away from the "Knife Up" proximity switch.
- The "Knife Up" proximity sensor is malfunctioning. See Diagnostic Mode section Test #2 (page 2003S20005-6).
- The "Blade Arm" has not returned to the full up, or home position. Check to see if you have power at the clutch drive gearmotor.

Ec- Auto Resetting travel error

- Clean the pusher pins and infeed tables, sticky product build-up are preventing free travel of the pusher.
- The setscrew securing the drive pulley on the stepper motor has become loose.
- See Ec01 solutions.

Rev. 10-1-96

SOLVING OTHER PROBLEMS

Slice Thicknesses Are Not Equal.

- The bread is not being pressed completely onto the pins of the pusher block allowing the loaf to move on the pins between cuts.

- Bread is getting caught in the gap between the infeed and outfeed tables preventing free movement of the product. Re-adjust the outfeed table for minimum gap, while still allowing free movement of the slicer blade. Do **NOT** adjust the infeed table.

- The slicer blade is loose. Check the blade mounting screw.

Thickness Of The Slices Are Equal But They Are Not True to The Slice Setting

- The circuit board may be malfunctioning. You can check for proper size selection by observing the "Slice Selection Truth Table Inputs" on the circuit board. Remove the rear access panel and watch to see which LED's are lit relative to the front control panel slice selection. Refer to Figure #1 to see which LED's should be lit for each of the selections.

		SLICE SELECTION							
YELLOW LED		1	2	3	4	5	6	7	8
	08							ON	ON
	07			ON	ON	ON	ON		
	06	ON	ON			ON	ON		
	05		ON		ON		ON		ON

Figure 1

Slices Are Being Pulled Up Or Pushed Down Through The Gap Between The Tables.

- A heavy build-up on the blade from slicing warm bread or sticky fruit breads can cause this type of product damage or malfunction.

- The gap between the tables is to large. Re-adjust the outfeed table to a minimum gap setting which still allows for free movement of the knife between them while still allowing comfortable clearance for the spinning knife.

- The fingers on the hold-down could be bent to far away from the blade so that they cannot maintain control over the slices or crusts and they are pulled between the blade and hold-down.

SOLVING OTHER PROBLEMS- Continued

The Blade Is Crushing The Bread.

- The bread may be too warm for slicing.
- A heavy build-up on the blade from slicing warm bread or sticky fruit breads can cause this type of product damage or malfunction.
- The slicer drive motor may not be running, (the slicer knife will not be rotating). The motor is protected by a motor starter, located behind the rear access panel, which may need to be reset.
- The Knife has become extremely dull and needs to be replaced.

Slicing Begins Too Soon, The Knife Takes Several Strokes Before Product Is beneath The Knife.

- The reflector on the inside of the Knife Cover is dirty.
- The reflector on the inside of the Knife Cover is missing.
- The "Product Detect" scanner has failed.

The "Door Open" Light Is Always On.

- Any of the three door proximity switches could cause this. Check each by placing a metallic object in front of each switch.

One Of The Doors Can Be Opened Without The "Door Open" Light Coming On.

- Have an electrician check each of the three door proximity switches for proper operation.

SOLVING OTHER PROBLEMS- Continued

Nothing Happens When The Machine Is Turned On.

- Check to see if the machine is plugged in.
- Check to see if there is power at the outlet.
- Check to see if any of the circuit breakers have tripped. They are located near the lower, right hand, rear corner of the machine.
- Verify that the On/Off power switch has not malfunctioned.
- Inspect the wiring harness where it connects to the push-button panel to see if it has been disconnected. Should this happen the LED's on the control panel will still be lit. They can be viewed by removing the access panel on the rear of the machine.

The Knife Vibrates Excessively.

- Loose or mis-aligned knife or clutch drive belt'(s). Align or re-tighten as necessary..

The Machine Makes A Loud Thumping Sound Before Making The First Slice.

- Check for a loose blade drive V-belt, or clutch drive belt.

DIAGNOSTIC MODE

Diagnostic mode gives you the ability to trouble shoot the Vari-Slicer. Diagnostic mode is a series of manually operated independent tests which can be entered as follows.

- With the power OFF, depress and hold the START and STOP buttons.
- Turn the power ON while the above buttons are depressed.
- Hold START and STOP buttons until the slice buttons begin to flash on and off.
- Release all buttons and follow the next step quickly.
- Within three seconds, while lights are still flashing, press and release the hidden button located to the left of the #1 button, you are now in Diagnostic Mode.

Select the specific tests using the numbered buttons. The START button must be pressed to initiate a particular test and should be pressed each time a new selection is made.

Turn the machine OFF for several seconds to reset it for normal operation.

TEST 1: Jog Mode Test

The pusher can be moved to the left by pressing the START button or to the right by pressing the STOP button. If the "End Travel" or "Home" proximity sensor is made, the motor will stop immediately. This will indicate the proximity sensor is operating correctly. releasing the START or STOP button will allow the motor to be restarted.

TEST 2: Arm Test - (DOORS MUST BE CLOSED)

The gearmotor can be energized by pressing and holding the START button for three seconds. Continuing to hold the Start button for an additional three seconds will engage the arm clutch making the arm move down and up through a cycle. As long as the Start button is depressed the arm will continue to cycle every three seconds. During each of these cycles the input LED #13 should go off and on once. If the LED remains either off or on then the "Knife Up" sensor must be adjusted so that the LED in on only when the arm is in the up position.

DIAGNOSTIC MODE- Continued

TEST 3: Blade Motor Test- (DOORS MUST BE CLOSED)

The blade motor can be energized by pressing and holding the START button for three seconds. The motor can be stopped by pressing the STOP button.

TEST 4: Product Detect Scanner Test - (DOORS MAY BE OPEN)

Press the START button. If the "Door Open" light is ON it will indicate that the scanner is detecting an object. If the light is OFF in is indicating the scanner is not finding any object in front of it.

TEST 6: Door Test

When the "Door Open" light is on it is indicating that one of the following three doors or covers are open: Knife Cover, Infeed Cover or Outfeed Cover.

TEST 7: "SLOW" Jog Mode Test

This test is similar to "Test 2" except the pusher moves slower.

TEST 8: Front Panel Test

Press buttons to light the corresponding LED found on the front panel itself. This test will also automatically display numbers in the numeric display area.

RECOMMENDED SPARE PARTS

PART NUMBER	PART DESCRIPTION	NO. REQ'D
2001-0101	Holder-Heel	1
2003-0006	Plate-Pusher W/Pins	1
2003-0026-001	Scanner-Bread	1
5250-0386	Bearing-Ball 1/2 X 1-1/8	1
5250-0387	Bearing-Ball 5/8 X 1-3/8	8
5251-3420	Bearing-Ball 4B Flange	2
5254-3190	Bearing-Bronze Flange	1
5254-3507	Bearing-Thrust	1
5601-1033	Belt-V 3L230	2
5601-3341	Belt-Timing 300L075	1
5601-3420	Belt-Timing 510L050	1
5601-3450	Belt-Timing 165L050	1
5711-9023	Tape-Reflective Micro 2" Wide	6 In.
5749-5624	Relay-4 Pole (115 VAC Machines)	1
5749-5666	Relay-4 Pole (230 VAC Machines)	1
5749-5670	Relay-2 Pole (230 VAC Machines)	1
5749-5671	Relay-2 Pole (115 VAC Machines)	1
5749-8290	Contactor (115 VAC)	1
5749-8284	Contactor (230 VAC)	1
5750-1290	Relay-Overload (115VAC)	1
5750-1254	Relay-Overload (230 VAC)	1
5757-3311	Switch-Rocker	1
5757-4155	Breaker-Circut 3A (115 & 230 VAC)	1
5757-4255	Breaker-Circut 5A (115 VAC Only)	1
5757-4257	Breaker-Circut 7A (230 VAC Only)	2
5757-4418	Breaker-Circut 15A (115 VAC Only)	1
5840-1020	Ring-Retaining N5000-112	2
5840-1026	Ring-Retaining N5000-137	2
5840-1125	Ring-Retaining #5100-50	1
5840-1128	Ring-Retaining #5100-62	5
5902-2017	Wire-Plastic .065 Diameter	2 Ft.
5906-4615	Sleeve-Cable	1
5906-4616	Sleeve-Cable	2
4560-2508-1106	Knob-Screw	1

OPTIONAL SPARE PARTS

2001-0019	Shaft-Clutch Drive	1
2003-0023	Motor-Stepping	1
5604-5257	Clutch-CB-5	1
5607-3070	Gearhead-6:1	1
5712-0402	Control-Vari-Slice Microprocesser	1
6301-5611	Motor-Brake 3/4 HP (115/230 VAC)	1
6310-1900	Gearmotor (115/230 VAC)	1
7107-7056	Knife-Scalloped Circular	1

REPLACEMENT PARTS LIST

ITEM NO.	PART DESCRIPTION	PART NUMBER
001	Cover-Electrical	2003-0021
002	Track-Crumb Tray	2003-0038
005	Tray-Crumb	2003-0037
006	Plate-Face	2003-0003
007	Stop-Cover	2001-0111
008	Bumper	2001-0112
009	Frame-Main	2003-0001
010	Spacer-Angle	2003-0034
011	Angle-Table Support	2003-0011
012	Bumper-Rubber	5902-0021
013	Stiffener	2003-0054
101	Motor-Brake 1/2 HP	6301-3633
101	Motor-Brake 3/4 HP	6301-5611
102	Key	4384-0406-15
103	Sheave 3L, 2-Grooves 1.5 OD	2003-0070
104	Belt-V 3L230	5601-1033
201	Block-Pivot Outside	2001-0041
202	Bearing-Ball	5250-0387
203	Ring-Retaining #N5000-137	5840-1026
204	Shaft-Drive	2001-0047-1
205	Pulley-Timing Belt	2003-0044
206	Sheave-3L, 2-Grooves 3.882 OD	2003-0071
207	Ring-Retaining #5100-62	5840-1128
208	Side-RH Arm	2003-0046-1
209	Side-LH Arm	2003-0047
210	Spacer-Aluminum Tube	2003-0050
211	Trunnion	2003-0052
212	Flag	2003-0053
213	Washer-Special	2003-0058
214	Holddown	2003-0064
215	Bearing-Bronze Flange	5254-3190
217	Ring-Retaining #5100-50	5840-1125
218	Spring-Extension	7021-4005
219	Belt-Timing 300L075	5601-3341
220	Spindle-Blade	2001-0072-101
222	Disk/Collar	2001-0073-001
223	Washer-Special	2001-0074
224	Knife-Scalloped	7107-7056
225	Rod-Connecting	2003-0027
226	Screw-Shoulder 1/2 X 1-1/4	5842-8545
227	Cover-Top	2003-0048
228	Cover-Bottom	2003-0049
229	Bearing-Bronze Thrust	5254-3507

Rev. 06-10-99

Parts List Continued

ITEM NO.	PART DESCRIPTION	PART NUMBER
230	Bushing-Stop	2003-0065
231	Pin-Coiled	5835-7625
301	Nutbar	2001-0015
302	Gearmotor 1/8 HP DC (115 VAC)	6310-0008
302	Gearmotor 1/15 HP (230 VAC)	6310-1900
303	Key	4384-0406-125
304	Pulley-Timing Belt	4495-2814-2
401	Nutbar-Stepper Motor	2001-0110
402	Motor-Stepper	2003-0023
403	Gearhead 6:1 Ratio	5607-3070
404	Pulley-Timing Belt	2003-0062
405	Belt-Timing # 510L050	5601-3420
406	Spindle-Idler	2001-0051
407	Pulley-Idler Timing	2001-0050
408	Bearing-Ball	5250-0386
409	Ring-Retaining # N5000-112	5840-1020
410	Clamp-Belt	2001-0034
411	Hitch-Pusher	2003-0007
412	Block-Center Wear	2001-0046
413	Pad-Bottom Wear	2003-0010
414	Flag-Proximity Sensor	2003-0004-001
415	Block-Pusher	2003-0005
416	Wiper Blade Assembly	2003-0009
417	Bracket-Pusher	2001-0035
418	Nutbar-Pusher	2001-0089
419	Plate-Pusher W/Pins	2003-0006
501	Guard-Blade	2003-0002
502	Knob-Screw	4560-2508-1106
503	Cover-Infeed Table	2003-0018
504	Nutbar-Infeed	2001-0102
505	Table-Rear Adj. Infeed	2003-0013-1
506	Pin 1/4 Diameter X 3/4	4475-0516-075
507	Nut-Cage 1/4-20	5832-0425
508	Nutbar-Outfeed	2001-0103
509	Table-Front Adj. Infeed	2003-0012-1
510	Cover-Outfeed Table	2003-0017
511	Table-Adj. Outfeed	2003-0014
512	Hinge-Infeed Cover	2001-0008
513	Strip-Hinge Backer (Infeed)	2001-0123
514	Cover-Infeed	2003-0015
515	Hinge-Outfeed Cover	2001-0009
516	Cover-Outfeed	2003-0016
517	Strip-Hinge Backer (Outfeed)	2003-0029

Rev. 1-27-97

Parts List Continued

ITEM NO.	PART DESCRIPTION	PART NUMBER
518	Strip-Handle Backer	2000-0087
519	Handle-Pull	5908-5100
520	Chute-Lower Crumb	2003-0030
521	Chute-Upper Crumb	2003-0032-1
523	Spacer-Scoop	2003-0043
524	Scoop-Bagging (Right Hand)	2003-0020
525	Cover-Pusher	2003-0019
530	Catch-Magnetic W/Strike	5805-2503
531	Prop-Blade Guard	2003-0039
532	Scoop-Bagging (Left Hand)	2003-0020-0002
533	Scoop-Bagging (Front Mount)	2003-0036
534	Scoop-Bagging (Side Mount)	0797-2048
601	Washer-Special	2001-0108-001
602*	Bushing-Snap Small	5765-1060
603*	Bushing-Snap Large	5767-1208
604*	Bushing-Stain Relief	5765-1082
605	Cord-Plug 14/3 (115 VAC)	5765-8302
606	Tape-Reflective (6 Inches)	5711-9023
607*	Switch-Rocker On/Off	5757-3311
608	Backer-Power Switch	2003-0056
609	Bracket-Cooling Fan	2003-0074
610	Fan-Axial (120 VAC)	6310-5010
701	Bracket-Clutch	2001-0016
702	Spacer	2001-0032
703	Bearing-Flange Ball	5251-3420
704	Clutch	5604-5257
705	Cover-Clutch	5604-5518
706	Spacer-Anchor	2001-0017
707	Plate-Anchor	2001-0033
708	Pulley-Timing Belt	2001-0001
709	Belt-Timing # 165L050	5601-3450
710	Shaft-Drive	2001-0019
711	Crank	2003-0028
712	Key	4384-0404-075
801	Breaker-Circuit 3A (115 & 230 V)	5757-4155
802	Breaker-Circuit 5A (115 V Only)	5757-4255
803	Breaker-Circuit 7A (230 V Only)	5757-4257
803	Breaker-Circuit 15A (115 V Only)	5757-4418
804	Bracket-Potentiometer	1403-0178-001

* Not Shown on Drawings

Rev. 10-12-99

OLIVER PRODUCTS COMPANY

MODEL 2003 VARIABLE THICKNESS BREAD SLICER

Parts List Continued

ITEM NO.	PART DESCRIPTION	PART NUMBER
805	Subpanel-Microprocessor	2002-0002
806	Control-Microprocessor	5712-0402
807	Supply-Power	5746-5687
808	Potentiometer-5K (115 VAC only)	5746-6000
809	Relay-4 Pole 3A (115 VAC)	5749-5624
809	Relay-4 Pole 3A (230 VAC)	5749-5666
810	Contactor-3 Pole (115 VAC)	5749-8274
810	Contactor-3 Pole (230 VAC)	5749-8284
811	Relay-Overload (115 VAC)	5750-1252
811	Relay-Overload (230 VAC)	5750-1254
812	Diode-Zener	5754-1045
813	Varistor (115 VAC)	5754-1070
813	Varistor (230 VAC)	5754-1073
814	Suppressor-RC (115 VAC)	5754-1083
814	Suppressor-RC (230 VAC)	5754-1084
816	Plug-Screw Connector 8 Pin	5765-7468
817	Plug-Screw Connector 10 Pin	5765-7469
818	Plug-Screw Connector 4 Pin	5765-7467
819	Socket-14 Pin	5770-2834
820	Control-DC (115 VAC only)	6309-6000
821	Resistor-Control (115VAC only)	6309-6014
822	Din Rail	5770-7166
823	Duct-Wire	5771-6260
824	Cover-Wire Duct	5771-6253
828	Block-Terminal	5770-7270
829	Block-Ground Terminal	5770-7271
831	Barrier-End	5770-7272
842	Sensor-Prox.	5757-8860
850*	Harness-Switch W/O Switch	2003-0024-001
858	Relay-2 Pole (115 VAC)	5749-5671
858	Relay-2 Pole (230 VAC)	5749-5670
859	Socket-8 Pin	5770-2833
875*	Harness-Main	2003-0025-001
876	Cord-AC Motor	2003-0025-002
877	Cord-Clutch	2003-0025-003
878	Cord-Gearmotor	2003-0025-004
901	Scanner-Bread	2003-0026-001
902	Switch-Prox. (Home/End)	2003-0026-002
903	Switch-Prox. (Door)	2003-0026-003
904*	Harness-Prox. Switches	2003-0026-004

* Not Shown on Drawings

Rev. 10-31-96

CLUTCH ASSEMBLY

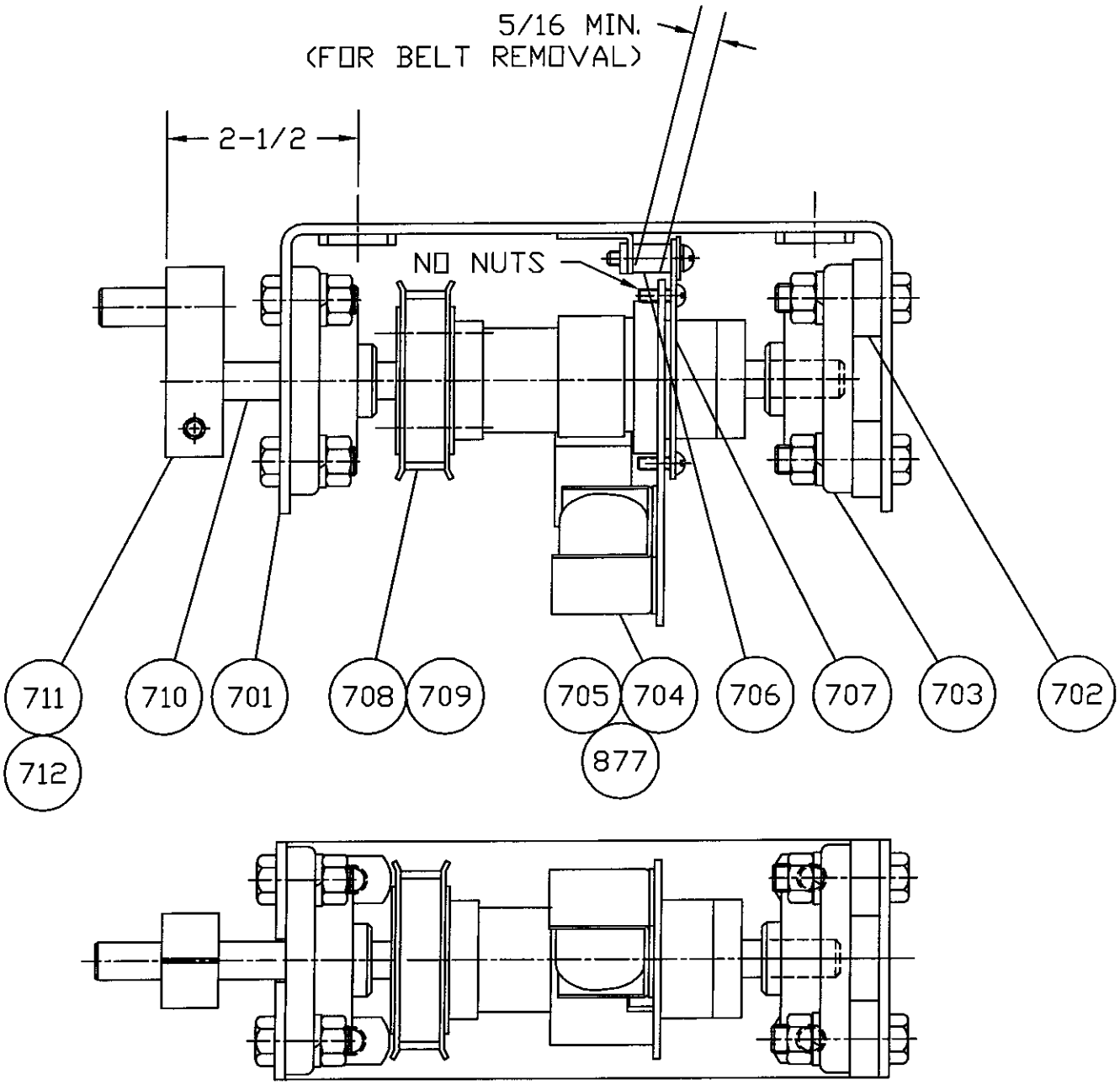

2003S20008

DRIVE ASSEMBLY

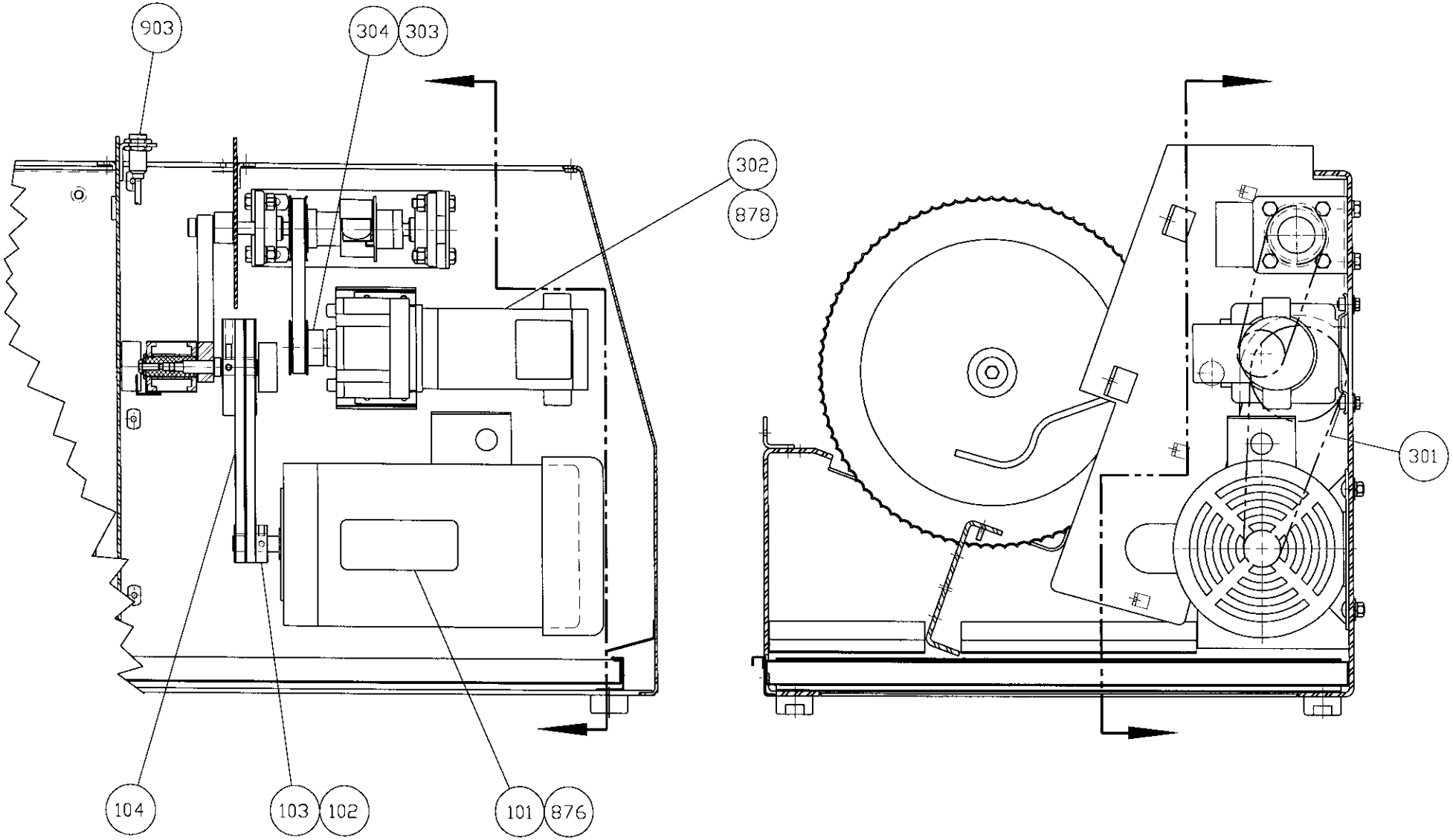

2003S20021

CUT-OFF ARM ASSEMBLY

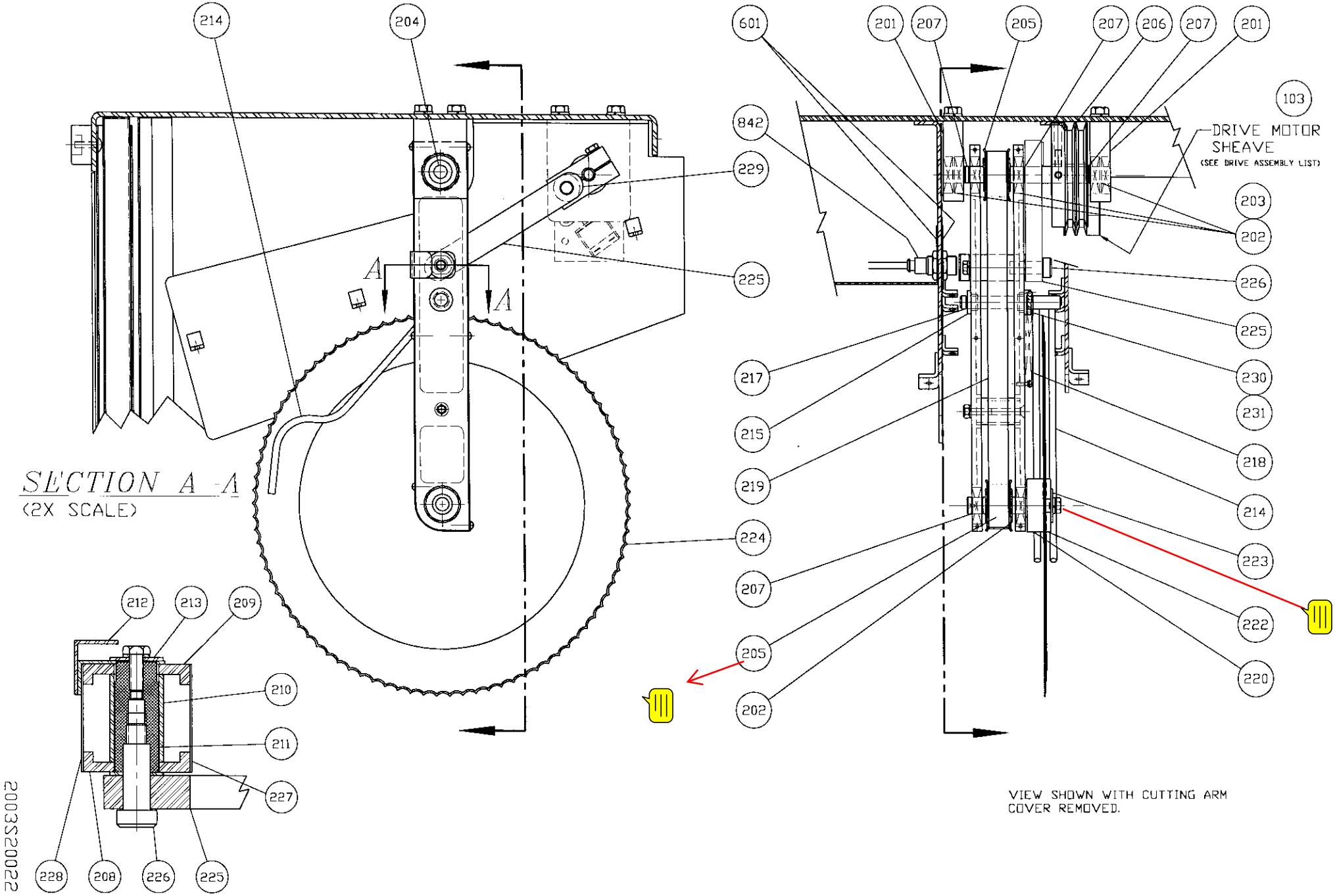

2003S20022

FRAME ASSEMBLY

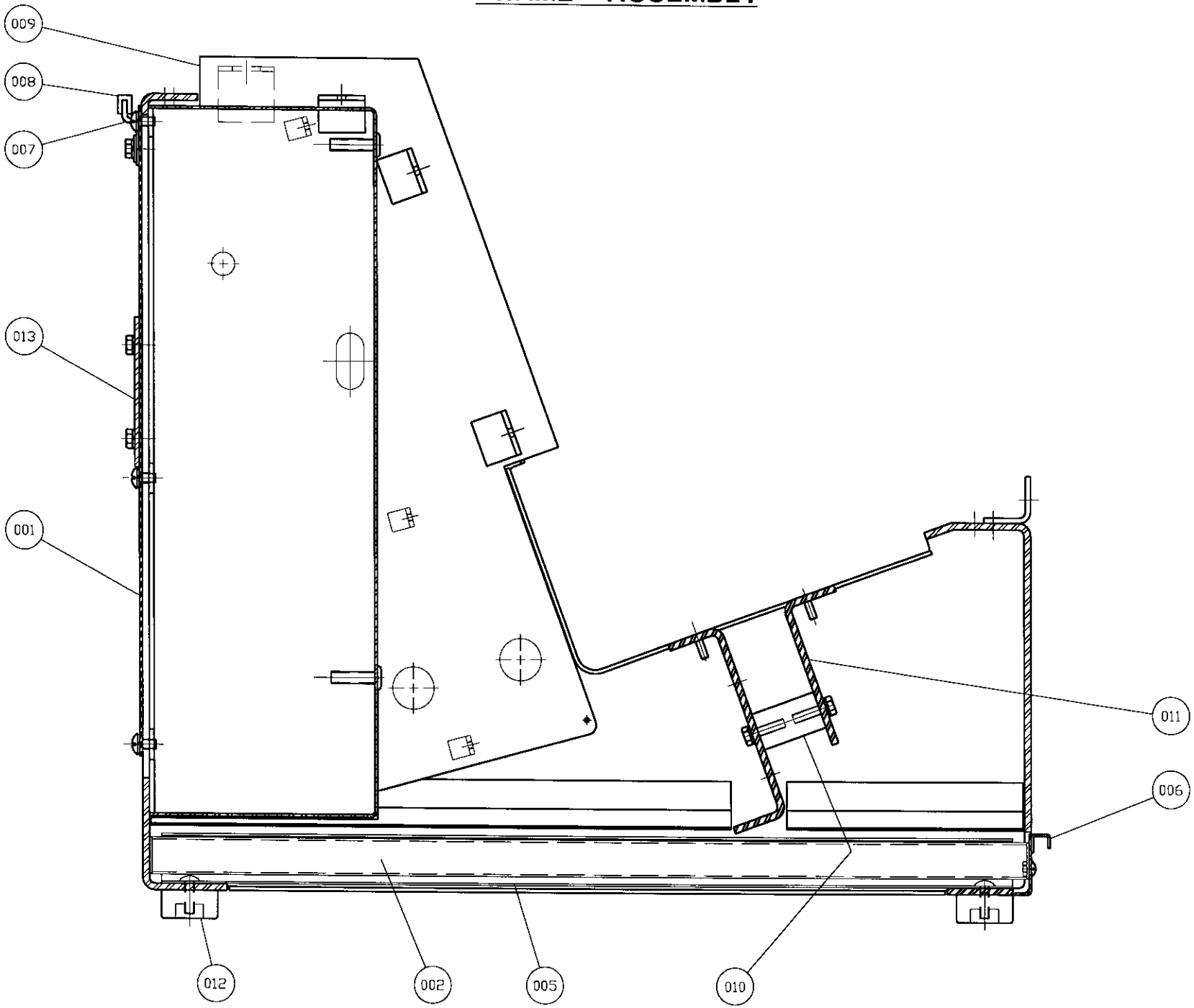

REVISED 12-1-97

2003S20011

PUSHER AND DRIVE ASSEMBLY

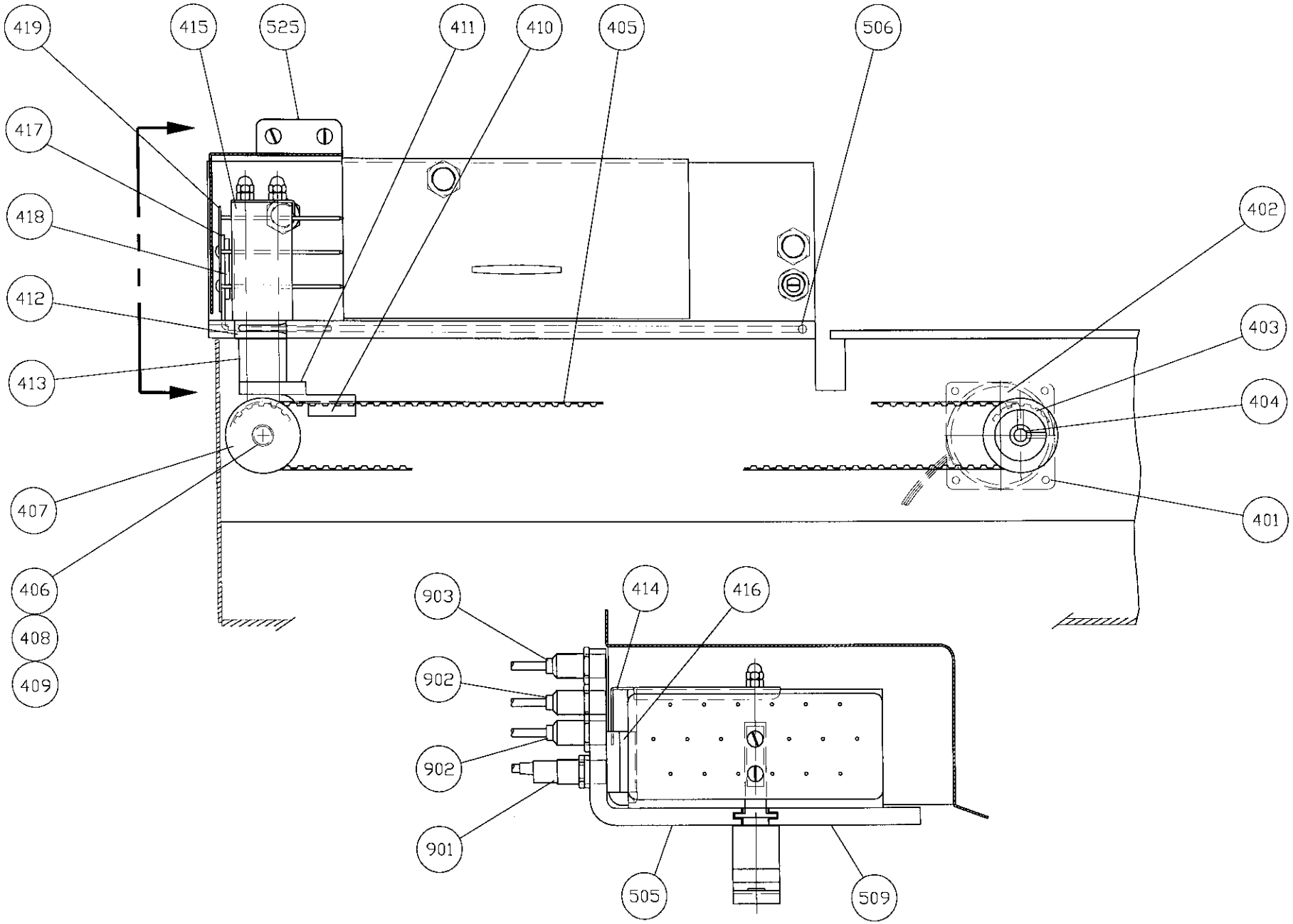

2003S20023

TABLE AND COVER ASSEMBLY

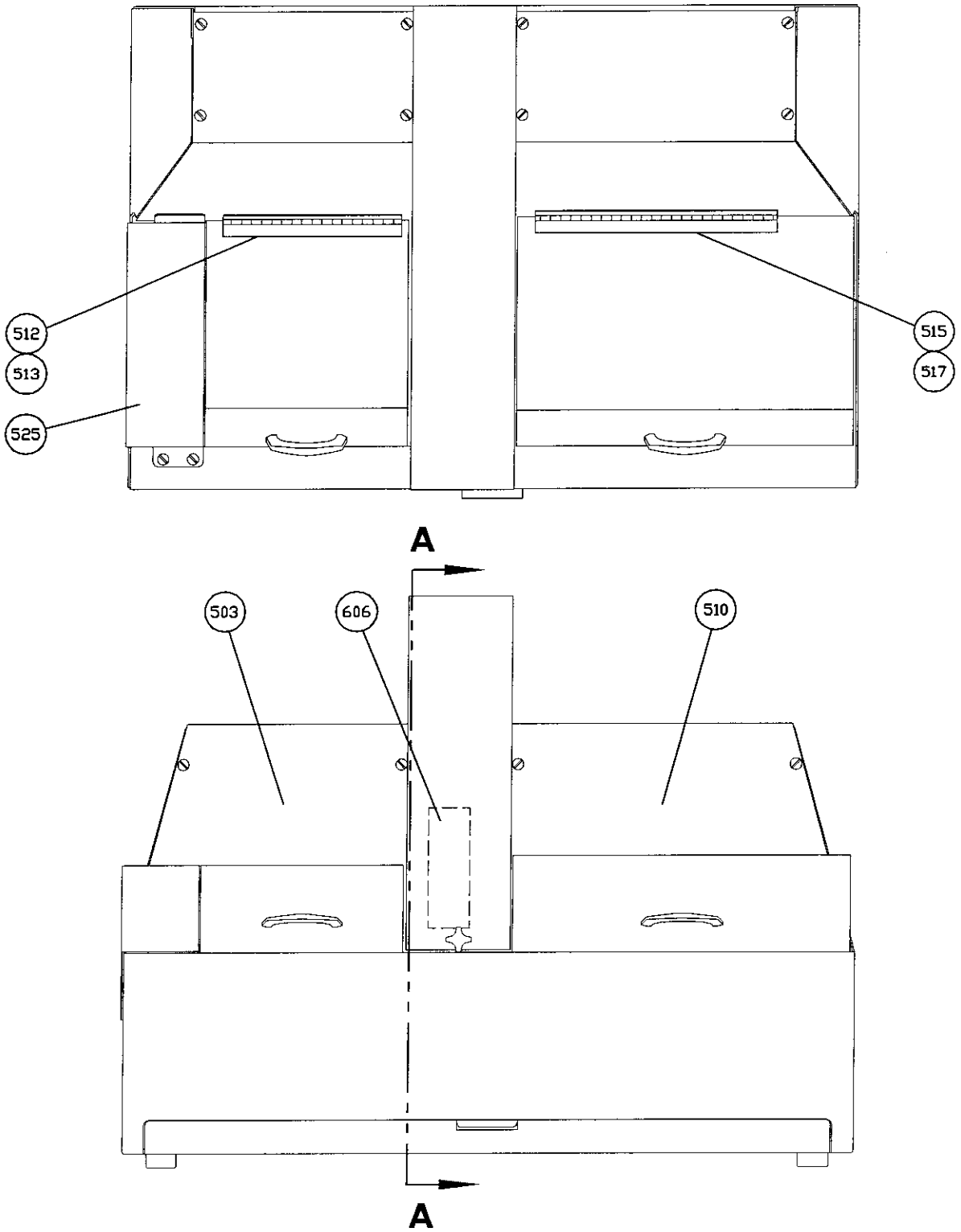

2003S20013-1

TABLE AND COVER ASSEMBLY

CONTINUED

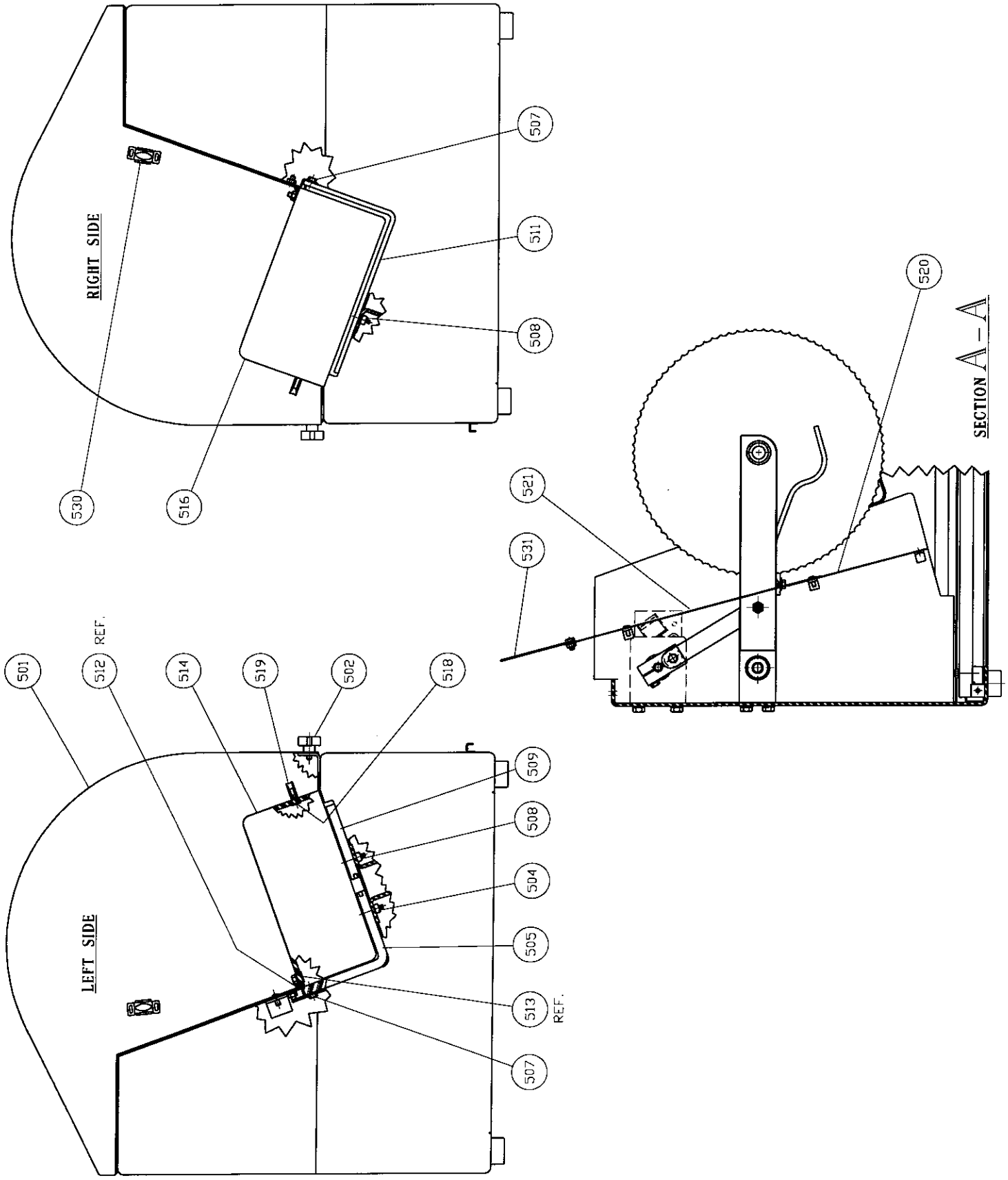

SUBPANEL ASSEMBLY

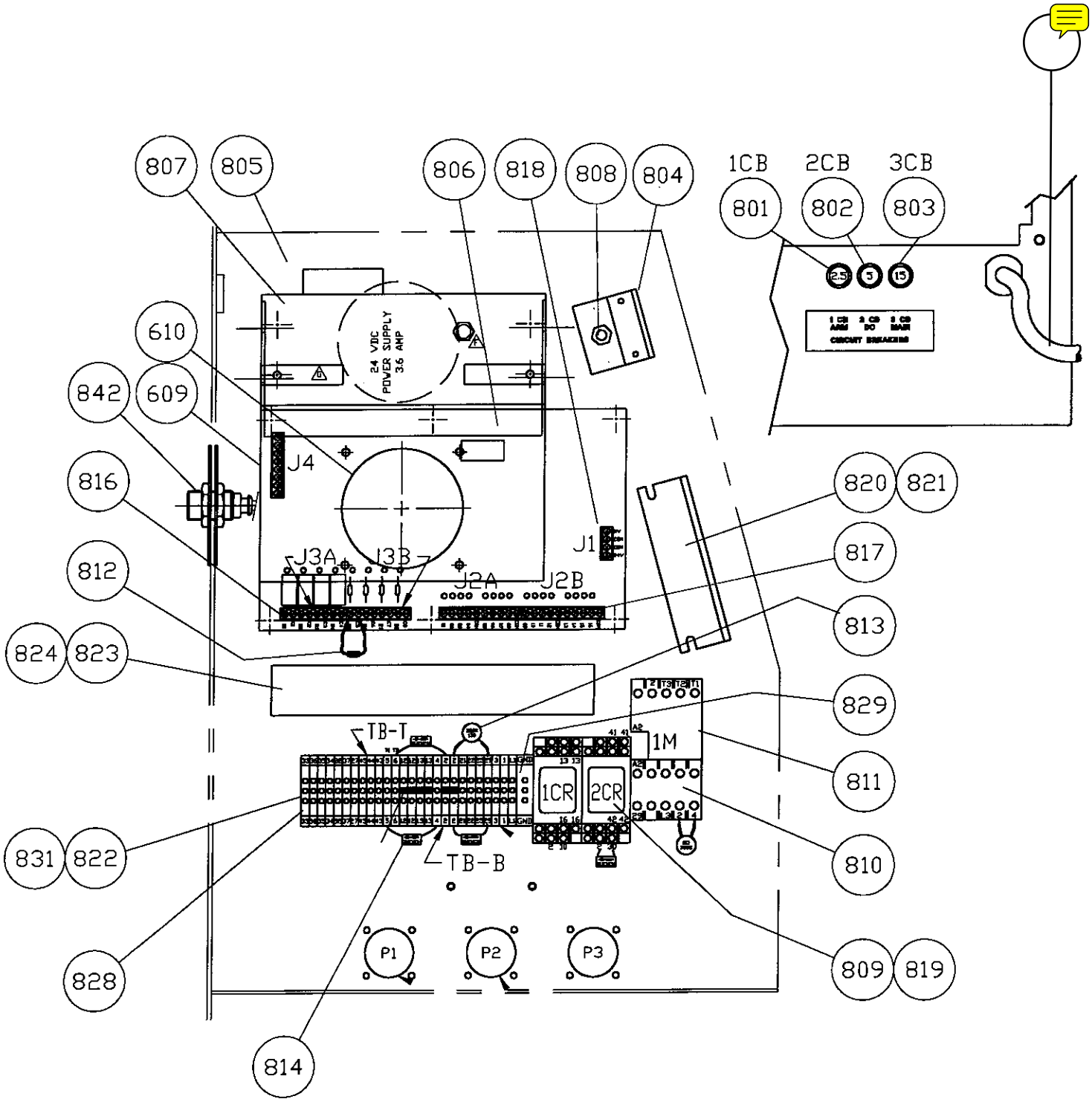

CONTROL WIRING DIAGRAM 1-60-115V

(WIRING DIAGRAM # 2003D12003)

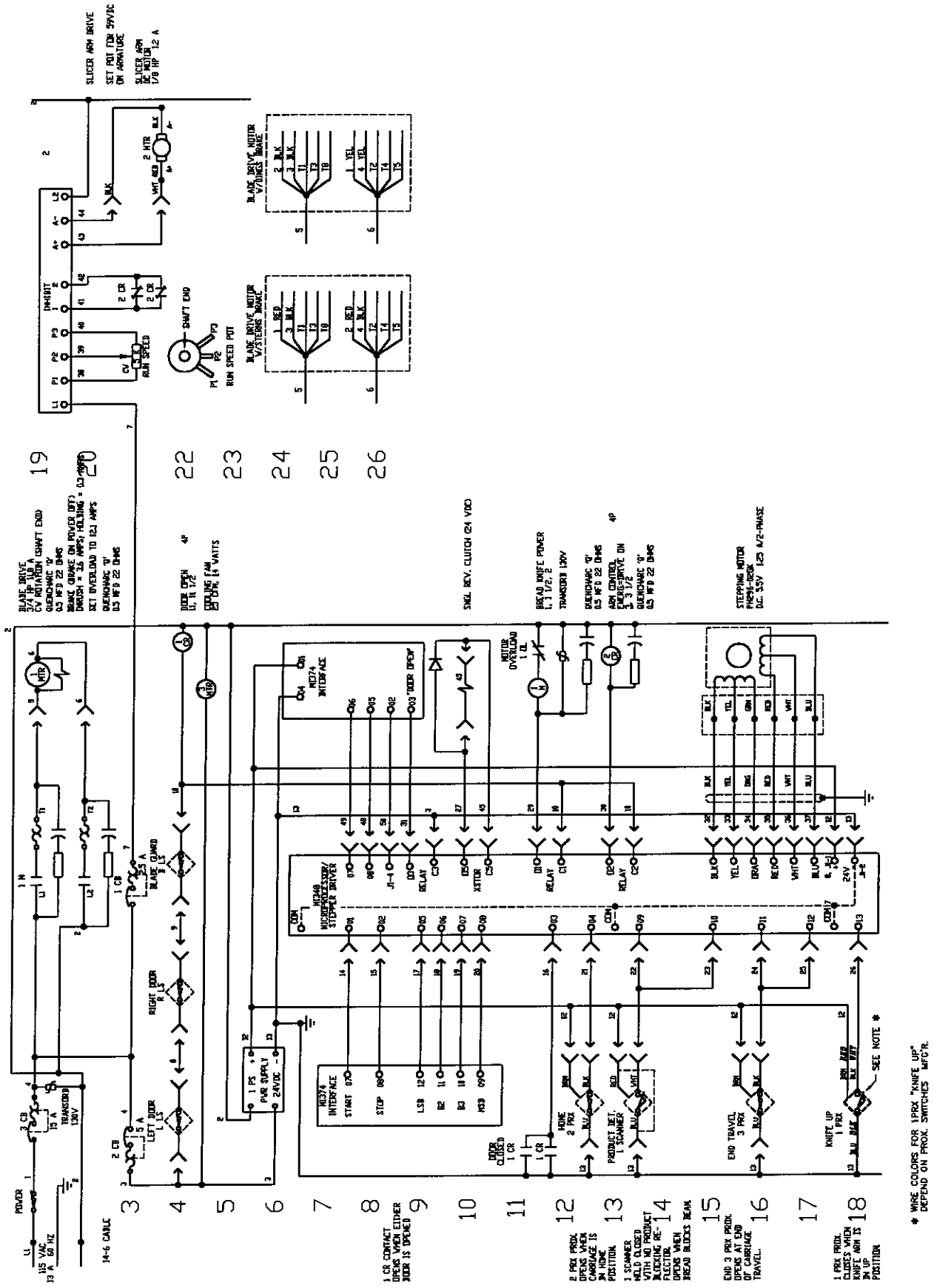

REVISED 10-13-99

2003S20015

CONTROL WIRING DIAGRAM 1-50/60-230V

(WIRING DIAGRAM # 2003D12001)

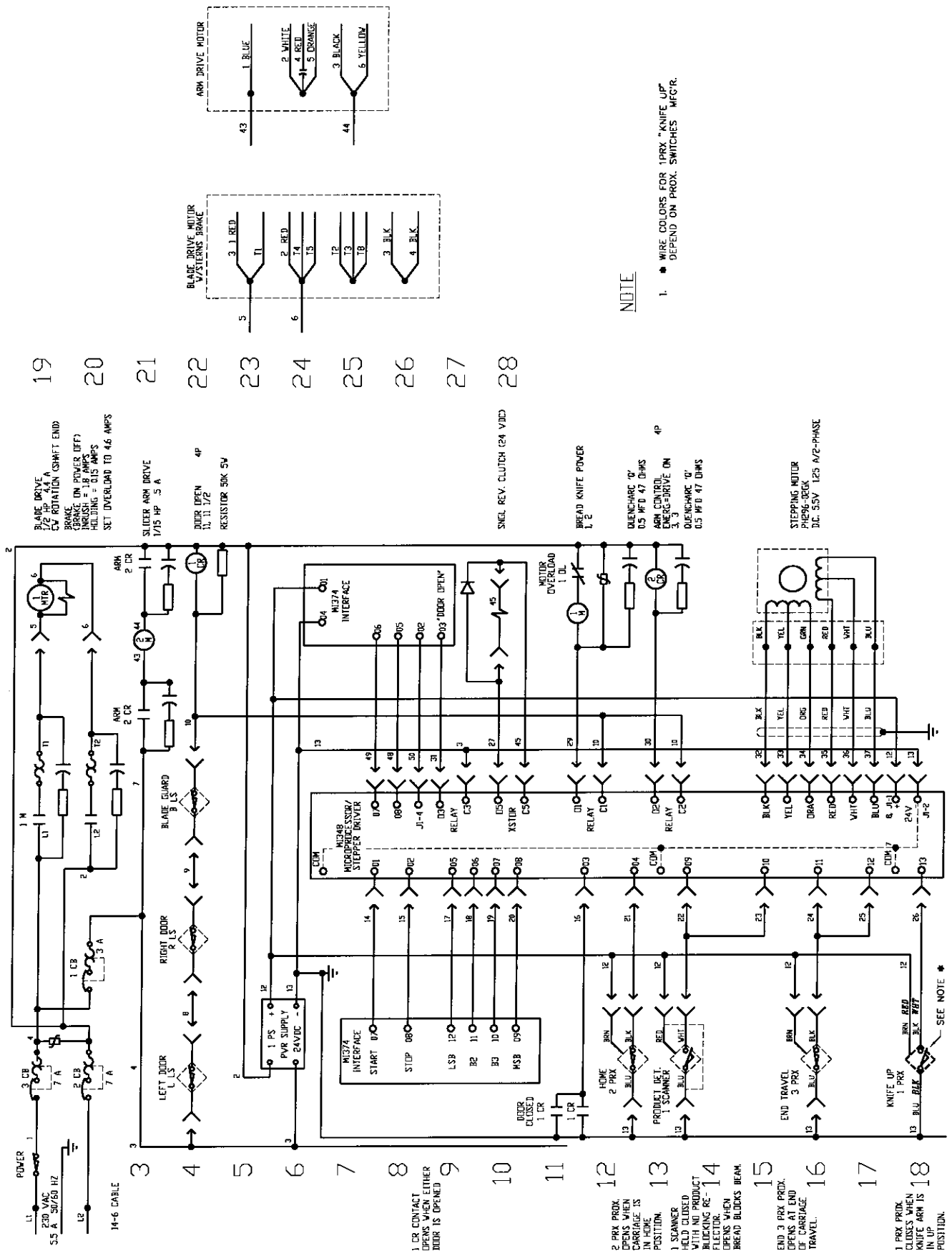

2003S20018

OPTIONAL BAGGING SCOOPS

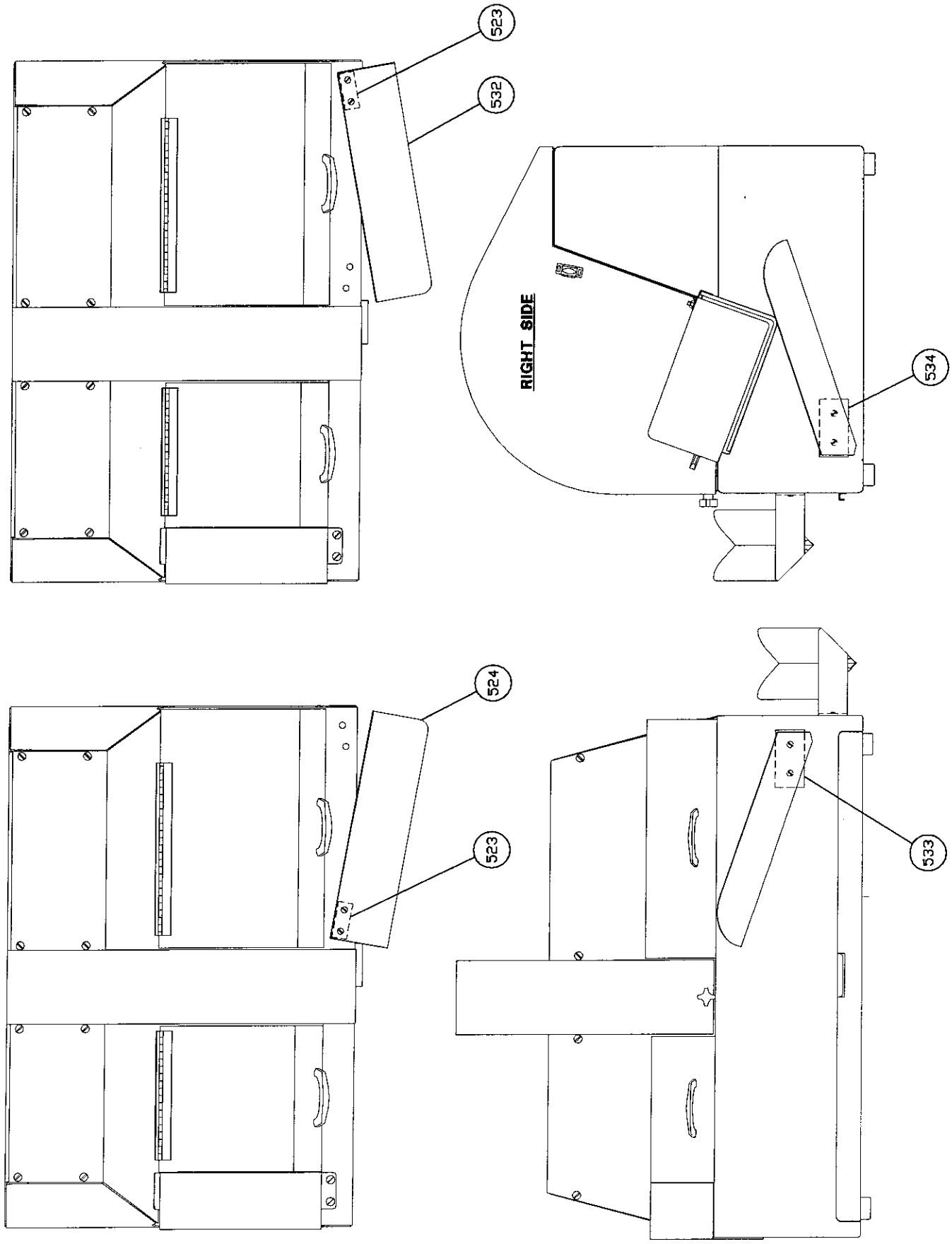

2003S20016

RETURNED PARTS POLICY

This policy applies to all parts returned to the factory whether for warrantied credit, replacement, repair or re-stocking.

OLIVER PRODUCTS COMPANY requires that you obtain a Return Material Authorization (RMA) number before returning parts. All parts are to be returned prepaid and marked; "ATTENTION REPAIR PARTS MANAGER". Following this procedure will result in prompt handling of your returned parts with an "RMA" number. This number should appear on the shipping label as well as inside the shipping container.

To obtain an "RMA" number, contact the Repair Parts Department toll free -- 800/253-3893, Ext. 148 or Ext. 150.

Parts returned for re-stocking are subject to a RE-STOCKING CHARGE.

Thank you for your cooperation,

Repair Parts Manager
Oliver Products Company

GEN 860501

OLIVER®
PRODUCTS COMPANY

445 Sixth St., N.W., Grand Rapids, Michigan 49504–5298
(616) 456–7711 • 800/253–3893 • Fax: (616) 456–5820

ISO 9001 OLIVER PRODUCTS COMPANY REGISTERED

WARRANTY

Varislicer ™ Model 2003

Product Suitability
This product is intended for the slicing of bread and bread related products only. The specific suitability for slicing certain bread types is to be determined at the time of sale in conjunction with an authorized Oliver Products Company representative.

Parts
Oliver Products Company warrants that if any part of the equipment (other than a part not manufactured by Oliver) proves to be defective (as defined below) within 3 years after shipment, and if Buyer returns the defective part to Oliver Products Company within one year, Freight Prepaid Oliver Products Company's plant in Grand Rapids, MI, then Oliver Products Company shall, at Oliver Product Company's option, either repair or replace the defective part, at Oliver Products Company's expense.

Labor
Oliver Products Company further warrants that equipment properly installed, maintained, and cleaned in accordance with our special instructions, which proves to be defective in material or workmanship under normal use within 2 years from installation or actual shipment date, which ever comes first, will be repaired by Oliver Products Company or an Oliver Products Company Authorized Service Dealer, in accordance with Oliver Products Company's published Service Schedule.

For purposes of this warranty, a defective part or defective equipment is a part or equipment which is found by Oliver Products Company to have been defective in materials or workmanship, if the defect materially impairs the value of the equipment to Buyer. Oliver Products Company has no obligation as to parts or components not manufactured by Oliver Products Company, but Oliver Products Company assigns to Buyer any warranties made to Oliver Products Company by the manufacturer thereof.

This warranty **does not** apply to:

1. Damage caused by lack of cleaning, shipping, accident, misuse, or acts of God.
2. Damage resulting from improper installation or alteration.
3. Equipment not cleaned daily, misused, abused, altered, not maintained on a regular basis, operated carelessly, or used in abnormal conditions.
4. Equipment used in conjunction with products of other manufacturers unless such use is approved by Oliver Products Company in writing.
5. Normal wear parts including but not limited to: blades, belts, brakes, clutches.
6. Periodic maintenance of equipment and other adjustments required due to installation, set-up, or normal wear.
7. Losses or damage resulting from malfunction.

THIS WARRANTY IS NOT EFFECTIVE UNLESS THE INSTALLATION/WARRANTY REGISTRATION HAS BEEN COMPLETED, SIGNED, AND RETURNED TO OLIVER PRODUCTS COMPANY WITHIN 15 DAYS FROM DATE OF INSTALLATION.

The foregoing warranty is in lieu of all other warranties expressed or implied AND OLIVER PRODUCTS COMPANY MAKES NO WARRANTY OF MERCHANTABILITY OR FITNESS FOR PURPOSE REGARDING THE EQUIPMENT COVERED BY THIS WARRANTY. Oliver Products Company neither assumes nor authorizes any person to assume for it any other obligations or liability in connection with said equipment. OLIVER PRODUCTS COMPANY SHALL NOT BE LIABLE FOR LOSS OF TIME, INCONVENIENCE, COMMERCIAL LOSS, INCIDENTAL OR CONSEQUENTIAL DAMAGES.