ACPC4610E/CC
CompactPCI Bus Non-Intelligent PMC Carrier Board

USER'S MANUAL

ACROMAG INCORPORATED
30765 South Wixom Road
P.O. BOX 437
Wixom, MI 48393-7037 U.S.A.
Tel: (248) 295-0310
Fax: (248) 624-9234
Solutions@acromag.com
Copyright 2008, Acromag, Inc., Printed in the USA.
Data and specifications are subject to change without notice.
8500-819-C09J010

TABLE OF CONTENTS

IMPORTANT SAFETY CONSIDERATIONS
You must consider the possible negative effects of power, wiring, component, sensor, or software failure in the design of any type of control or monitoring system. This is very important where property loss or human life is involved. It is important that you perform satisfactory overall system design and it is agreed between you and Acromag, that this is your responsibility.

The information of this manual may change without notice. Acromag makes no warranty of any kind with regard to this material, including, but not limited to, the implied warranties of merchantability and fitness for a particular purpose. Further, Acromag assumes no responsibility for any errors that may appear in this manual and makes no commitment to update, or keep current, the information contained in this manual. No part of this manual may be copied or reproduced in any form without the prior written consent of Acromag, Inc.

1.0 General Information

KEY FEATURES…… 3
SIGNAL INTERFACE PRODUCTS…… 3

2.0 PREPARATION FOR USE

UNPACKING AND INSPECTION..... 4
CARD CAGE CONSIDERATIONS..... 4
Non-Isolation Considerations..... 4
Rear I/O Connector…… 5
CompactPCI Bus Connector..... 6

3.0 SERVICE AND REPAIR

SERVICE AND REPAIR ASSISTANCE..... 7
PRELIMINARY SERVICE PROCEDURE..... 7
WHERE TO GET HELP…… 7

4.0 SPECIFICATIONS

PHYSICAL..... 8
CONNECTORS..... 8
ENVIRONMENTAL..... 8
POWER REQUIREMENTS..... 9
CompactPCI BUS COMPLIANCE…… 9
RELIABILITY PREDICTION..... 9

APPENDIX

MODEL TRANS-C4610…… 10
MODEL 5028-432…… 10
MODEL 5025-288…… 11

DRAWINGS

MODEL ACPC4610E…… 12
MODEL ACPC4610CC…… 13
4502-096 ACPC4610 BLOCK DIAGRAM…… 14
MODEL TRANS-C4610…… 15
4502-089 TRANS-C4610 SCHEMATIC…… 16
4501-919 MODEL 5028-432…… 17
4501-920 MODEL 5025-288…… 18
Certificate of Volatility…… 19

Trademarks are the property of their respective owners.

1.0 GENERAL INFORMATION

The ACPC4610E/CC is a 3U CompactPCI Bus Non-Intelligent PMC carrier board designed for the 32-bit 33MHz or 66MHz CompactPCI bus. The carrier card uses a PLX Technology® Bridge Chip (PCI6540) to interface between the CompactPCI bus and one PMC mezzanine I/O module card.

MODEL ACPC4610E

Model ACPC4610E is an air-cooled extended temperature product which can be used for front and rear PMC mezzanine I/O modules. Front I/O can be accessed through the front panel. Rear I/O can be accessed though the J2 connector on the carrier.

KEY FEATURES

- **ESD Strip on ACPC4610E Board** - The ACPC4610E board has been designed to provide electrostatic discharge (ESD) capability by using an ESD strip on the board per IEEE1101.10.
- **Injector/Ejector Handle** - The ACPC4610E uses a modern injector/ejector handle, which pushes the board into the rack during installation and has a positive self-locking mechanism so it cannot be unlocked accidentally. This handle is fully IEEE 1101.10 compliant and is needed to give leverage to install and remove the board.
- **EMC Front Panel** - The ACPC4610E uses the preferred EMC front panel per IEEE 1101.10 specification.

MODEL ACPC4610CC

Model ACPC4610CC is a conduction cooled product which is usually only used for rear Conduction Cooled PMC mezzanine I/O modules. Rear I/O can be accessed though the J2 connector on the carrier.

KEY FEATURES

- **Conduction Cooled Frame** - The ACPC4610CC board has a custom conduction cooled assembly consisting of a conduction cooled frame, thermo bars, ejector/injectors and Wedge-Loks® designed to thermally conduct heat away from the Conduction Cooled PMC modules per ANSI/VITA 30.1-2001.

SIGNAL INTERFACE PRODUCTS

CompactPCI Transition Module

Model TRANS-C4610 Transition Module: This module plugs into the rear backplane directly behind the ACPC4610E carrier board. The field I/O connections are made through the backplane to the J2 connector of the carrier board and then routed to a 68 pin SCSI-3 connector P1, on the transition module, for rear exit from the card cage. This module is available for use in card cages which provide rear exit for I/O connections via 80 mm wide transition modules (transition modules can only be used in card cages specifically designed for them). It is a single-height (3U), single-slot module and adheres to the CompactPCI mechanical dimensions and IEEE Standard (1101.11-1998), with a printed circuit board depth of 80mm, which is a standard transition module depth. The transition module connects to Acromag Termination Panel (Model 5025-288) using a round 68 conductor shielded cable (Model 5028-432) to the rear of the card cage, and to the ACPC4610E board within the card cage.

Cables

Model 5028-432: A 2-meter cable, with a male SCSI-3 connector at both ends and 34 twisted pairs. This cable is used for connecting the TRANS-C4610 board to Model 5025-288 termination panels.

Termination Panel

Model 5025-288: DIN-rail mountable panel provides 68 screw terminals for universal field I/O termination. Connects to the TRANS-C4610 board, via SCSI-3 to twisted pair cable, Model 5028-432.

2.0 PREPARATION FOR USE

UNPACKING AND INSPECTION

Upon receipt of this product, inspect the shipping carton for evidence of mishandling during transit. If the shipping carton is badly damaged or water stained, request that the carrier's agent be present when the carton is opened. If the carrier's agent is absent when the carton is opened and the contents of the carton are damaged, keep the carton and packing material for the agent's inspection.

WARNING: This board utilizes static sensitive components and should only be handled at a static-safe workstation.

For repairs to a product damaged in shipment, refer to the Acromag Service Policy to obtain return instructions. It is suggested that salvageable shipping cartons and packing material be saved for future use in the event the product must be shipped.

This board is physically protected with packing material and electrically protected with an anti-static bag during shipment. However, it is recommended that the board be visually inspected for evidence of mishandling prior to applying power.

CARD CAGE CONSIDERATIONS

Refer to the specifications for loading and power requirements. Be sure that the system power supplies are able to accommodate the power requirements of the system boards, plus the installed Acromag board, within the voltage tolerances specified.

IMPORTANT: *Adequate air circulation must be provided to prevent a temperature rise above the maximum operating temperature.*

In an air cooled assembly, adequate air circulation must be provided to prevent a temperature rise above the maximum operating temperature and to prolong the life of the electronics. If the installation is in an industrial environment and the board is exposed to environmental air, careful consideration should be given to air-filtering.

In a conduction cooled assembly, adequate thermo conduction must be provided to prevent a temperature rise above the maximum operating temperature.

Non-Isolation Considerations

The board is non-isolated, since there is electrical continuity between the CompactPCI bus and PMC module grounds. As such, the field I/O connections are not isolated from the system. Care should be taken in designing installations without isolation to avoid noise pickup and ground loops caused by multiple ground connections.

Rear I/O Connector

The model ACPC4610E/CC carrier field I/O connections are made through the rear via J2 for a single PMC mezzanine I/O module card.

Table 2.1 indicates the pin assignments for the CompactPCI I/O signal mapping at the J2 connector. The connector consists of 22 rows of six pins labeled A, B, C, D, E and F. Pin A1 is located near the center of the board, viewed from the front component side. J2 is used to route a single PMC Module's field signals from the carrier to the backplane.

IMPORTANT: Model ACPC4610E/CC cannot be used in 64 bit cPCI or PXI systems as rear I/O (J2) is mapped to the same connector as the additional control lines for 64-bit cPCI or PXI.

Table 2.1: *CompactPCI I/O Signals J2 Connections*

Pin	Row A	Row B	Row C	Row D	Row E	Row F
1	***VI/O***	64	63	62	61	GND
2	60	59	58	57	56	GND
3	55	54	53	52	51	GND
4	50	49	48	47	46	GND
5	45	44	43	42	41	GND
6	40	39	38	37	36	GND
7	35	34	33	32	31	GND
8	30	29	28	27	26	GND
9	25	24	23	22	21	GND
10	20	19	18	17	16	GND
11	15	14	13	12	11	GND
12	10	9	8	7	6	GND
13	5	4	3	2	1	GND
14	+3.3V	+3.3V	+3.3V	+5V	+5V	GND
15	NC	NC	NC	NC	NC	GND
16	NC	NC	NC	NC	NC	GND
17	NC	NC	NC	NC	NC	GND
18	NC	NC	NC	NC	NC	GND
19	NC	NC	NC	NC	NC	GND
20	NC	NC	NC	NC	NC	GND
21	NC	NC	NC	NC	NC	GND
22	NC	NC	NC	NC	NC	GND

Notes:
1. Entries in the table are of the PMC J14 pin number.
2. NC is no connections, NOT USED by this carrier board.
3. ***VI/O*** NOT USED by this carrier board.

CompactPCI Bus Connectors for J1

Table 2.2 indicates the pin assignments for the 32-bit CompactPCI bus signals at the J1 connector. The connector consists of 25 rows of six pins labeled A, B, C, D, E and F. Pin A1 is located at the lower right hand corner of the connector if the board is viewed from the front component side.

Refer to the CompactPCI bus specification for additional information on the CompactPCI bus signals.

Table 2.2: *CompactPCI Bus J1 Connections*

Pin	Row A	Row B	Row C	Row D	Row E	Row F
1	+5V	-12v	***TRST#***	+12V	+5V	GND
2	***TCK***	+5V	***TMS***	TDO	TDI	GND
3	INTA#	***INTB#***	***INTC#***	+5V	***INTD#***	GND
4	***IPM*PWR***	HEAL*#	V(I/0)	***INTP***	***INTS***	GND
5	***BR*A5***	***BR*B5***	RST#	GND	GNT#	GND
6	REQ#	GND	+3.3V	CLK	AD[31]	GND
7	AD[30]	AD[29]	AD[28]	GND	AD[27]	GND
8	AD[26]	GND	V(I/O)	AD[25]	AD[24]	GND
9	C/BE[3]#	IDSEL	AD[23]	GND	AD[22]	GND
10	AD[21]	GND	+3.3V	AD[20]	AD[19]	GND
11	AD[18]	AD[17]	AD[16]	GND	C/BE[2]#	GND
12						GND
13		**KEY**	**AREA**			GND
14						GND
15	+3.3V	FRAM#	IRDY#	BD SEL#	TRDY#	GND
16	DEVSEL#	GND	V(I/O)	STOP#	LOCK#	GND
17	+3.3V	***IP*SCL***	***IPM*DA***	GND	PERR#	GND
18	SERR#	GND	+3.3V	PAR	C/BE[1]#	GND
19	+3.3V	AD[15]	AD[14]	GND	AD[13]	GND
20	AD[12]	GND	V(I/O)	AD[11]	AD[10]	GND
21	+3.3V	AD[9]	AD[8]	M66EN	C/BE[0]#	GND
22	AD[7]	GND	+3.3V	AD[6]	AD[5]	GND
23	+3.3V	AD[4]	AD[3]	+5V	AD[2]	GND
24	AD[1]	+5V	V(I/O)	AD[0]	***ACK64#***	GND
25	+5V	***REQ64#***	***ENUM#***	+3.3V	+5V	GND

Notes:
1. Pound (#) is used to indicate an active-low signal.
2. ***BOLD ITALIC*** Logic Lines are NOT USED by this carrier board.

3.0 SERVICE AND REPAIR

Surface-Mounted Technology (SMT) boards are generally difficult to repair. It is highly recommended that a non-functioning board be returned to Acromag for repair. The board can be easily damaged unless special SMT repair and service tools are used. Further, Acromag has automated test equipment that thoroughly checks the performance of each board. When a board is first produced and when any repair is made, it is tested, placed in a burn-in room at elevated temperature, and retested before shipment.

Please refer to Acromag's Service Policy Bulletin or contact Acromag for complete details on how to obtain parts and repair.

SERVICE AND REPAIR ASSISTANCE
PRELIMINARY SERVICE PROCEDURE

Before beginning repair, be sure that all of the procedures in Section 2, Preparation For Use, have been followed. Also, refer to the documentation of your PMC module to verify that it is correctly configured. Replacement of the board with one that is known to work correctly is a good technique to isolate a faulty board.

CAUTION: POWER MUST BE TURNED OFF BEFORE REMOVING OR INSERTING BOARDS

WHERE TO GET HELP

If you continue to have problems, your next step should be to visit the Acromag worldwide web site at http://www.acromag.com. Our web site contains the most up-to-date product and software information.

www.acromag.com

Choose the "Support" hyperlink in our website's top navigation row then select "Embedded Board Products Support" or go to http://www.acromag.com/subb_support.cfm to access:

- Application Notes
- Frequently Asked Questions (FAQ's)
- Knowledge Base
- Tutorials
- Software Updates/Drivers

An email question can be submitted from within the Knowledge Base or through the "Contact Us" hyperlink at the top of any web page.

Acromag's application engineers can also be contacted directly for technical assistance via telephone or FAX through the numbers listed at the bottom of this page. When needed, complete repair services are also available.

4.0 SPECIFICATIONS

PHYSICAL

Physical Configuration	3U CompactPCI 5V/3.3V Board
Height	3.937 inches (100.0 mm)
Depth	6.299 inches (160.0 mm)
Board Thickness	0.063 inches (1.60 mm)
Unit Weight:	
Model ACPC4610E	0.35 pounds (0.16 Kg)
Model ACPC4610CC	0.50 pounds (0.23 Kg)

Connectors

J1 (CompactPCI Bus)	PCI Specification Version 2.3 & CompactPCI Specification PICMG 2.0 R3.0. Connector interfaces to the PLX Technology® Bridge Chip (PCI6540) primary side. Type "A" right-angle female connector, 110 contacts with upper shield.

Note: This board is universal 3.3V or 5V signal tolerant.

J2 (CompactPCI Rear I/O)	PMC on CompactPCI Specification PICMG 2.3 R1.0. Utilizes Type "B" right-angle female connector, 110 contacts with upper shield. **Not compatible with 64 bit CompactPCI or PXI.**
J11, 12	PMC bus connectors (Molex 71439-0164 or equivalent) interfaces to the PLX Technology Bridge Chip (PCI6540) secondary side.
J14	PMC Rear I/O connector (Molex 71439-0164 or equivalent) interfaces J2.

ENVIRONMENTAL

Models: ACPC4610E, ACPC4610CC and TRANS-C4610

Operating Temperature: -40 to 85°C
Relative Humidity: 5-95% Non-Condensing.
Storage Temperature: -55°C to 100°C.

Also, designed to meet the following environmental standards per ANSI/VITA47-2005(R2007).

Model ACPC4610E & TRANS-C4610

- Environmental Class EAC6
- Operating Temperature: AC3 (-40 to 70°C)
- Vibration Class: V2
- Shock 20g

Model ACPC4610CC

- Environmental Class ECC4
- Operating Temperature: CC4 (-40 to 85°C)
- Vibration Class: V3
- Shock 40g

POWER REQUIREMENTS

3.3 VDC (±5%)*	Typical 135 mA	Max. 150 mA
5.0 VDC (±5%)*	Typical 50 mA	Max. 70 mA
3.3 VDC (±5%)	Per PMC Module	Maximum**
5.0 VDC (±5%)	Per PMC Module	Maximum**
+12 VDC (±5%)	Per PMC Module	Maximum**
-12 VDC (±5%)	Per PMC Module	Maximum**

* With no PMC module installed +12 VDC and -12VDC not used.
** Maximum power of 7.5 Watts (Total of all supplies) per PMC standard.

Maximum Power for Rear Transition Modules:

3.3 VDC	Maximum 3 Amps (Fused at 4 Amps)
5.5 VDC	Maximum 2 Amps (Fused at 3 Amps)

Note: Model TRANS-C4610 does not use 3.3 VDC or 5.0 VDC power.

CompactPCI Bus Compliance

This device meets or exceeds all written PCI Specification Version 2.3 & CompactPCI Specification PICMG 2.3 R1.0

Non-Isolated: PCI bus and field commons have a direct electrical connection.

PMC Compatibility: Pin assignment conform to PCI Bus Specification, Revision 2.3 and PMC Specification, P1386.1

Signaling: 3.3V signaling as required by the PMC module, 5V signaling PMC modules may tolerate 3.3V signaling.

PCI Bus Clock: This product is not guaranteed to function with a CompactPCI bus clock frequency greater than 66MHz.

PLX Technology Bridge Chip (PCI6540): For more information on this bridge chip go to www.plxtech.com.

Reliability Prediction

Mean Time Between Failure: 2,558,049 hours (ACPC4610E/CC) @ 25°C, Using MIL-HDBK-217F, Notice 2.

APPENDIX

MODEL TRANS-C4610

Type: Transition module for ACPC4610 boards.
Application: To repeat field I/O signals of PMC modules for rear exit from CompactPCI card cages. This module is available for use in card cages which provide rear exit for I/O connections via 80 mm wide transition modules (transition modules can only be used in card cages specifically designed for them). It is a single-height (3U), single-slot module and adheres to the CompactPCI mechanical dimensions and IEEE Standard (1101.11-1998), with a printed circuit board depth of 80mm, which is a standard transition module depth. The transition module connects to Acromag Termination Panel (Model 5025-288) using a round 68 conductor shielded cable (Model 5028-432) to the rear of the card cage, and to ACPC4610 board within the card cage.
Schematic and Physical Attributes: See page 15 and 16.
Field Wiring: 68 pin SCSI-2 connector P1.
Connections to ACPC4610: Connections are made though the PC board connector J2 (110 signals, female right angle with upper ground shield). The transition module plugs directly behind the ACPC4610 board into the 3U CompactPCI bus backplane within the card cage system.
Mounting: Transition module is inserted into a 3U-size, 80 mm width slot at the rear of the CompactPCI bus card cage. (Directly behind ACPC4610 board.
Printed Circuit Board: Four-layer, military-grade FR-4 epoxy glass circuit board, 0.063 inches thick.
Operating Temperature: -40°C to +85°C.
Storage Temperature: -55°C to +100°C.
Shipping Weight: 0.25 pounds (0.11Kg) packed.

MODEL 5028-432

Type: Round shielded cable, 68-wires (SCSI-3 male connector at both ends). The cable length is 2 meters (6.56 feet). This shielded cable is recommended for all I/O applications (both digital I/O and precision analog I/O).
Application: Used to connect Model 5025-288 termination panel to the ACPC4610 Board.
Length: Standard length is 2 meters (6.56 feet). Consult factory for other lengths. It is recommended that this length be kept to a minimum to reduce noise and power loss.
Cable: 68 conductors, 28 AWG on 0.050 inch centers (permits mass termination for IDC connectors), foil/braided shield inside a PVC jacket.
Connectors: SCSI-3, 68-pin male connector with back shell.
Keying: The SCSI-3 connector has a "D Shell".
Schematic and Physical Attributes: See Drawing 4501-919.
Electrical Specifications: 30 VAC per UL and CSA (SCSI-3 connector spec.'s). 1 Amp maximum at 50% energized (SCSI-3 connector spec.'s).
Operating Temperature: -30°C to +80°C.
Storage Temperature: -40°C to +85°C.
Shipping Weight: 1.0 pound (0.5Kg), packed.

MODEL 5025-288

Type: Termination Panel For CompactPCI Boards

Application: To connect field I/O signals to the CompactPCI Board.

Termination Panel: Acromag Part 4001-066. The 5025-288 termination panel facilitates the connection of up to 68 field I/O signals and connects to the CompactPCI Board (connectors only) via a round shielded cable (Model 5028-432). Field signals are accessed via screw terminal strips. The terminal strip markings on the termination panel (1-68) correspond to field I/O (pins 1-68) on the CompactPCI board. Each CompactPCI board has its own unique pin assignments. Refer to the CompactPCI board manual for correct wiring connections to the termination panel.

Schematic and Physical Attributes: See Drawing 4501-920.

Field Wiring: 68-position terminal blocks with screw clamps. Wire range 12 to 26 AWG.

Mounting: Termination panel is snapped on the DIN mounting rail.

Printed Circuit Board: Military grade FR-4 epoxy glass circuit board, 0.063 inches thick.

Operating Temperature: -40°C to +100°C.

Storage Temperature: -40°C to +100°C.

Shipping Weight: 1.0 pounds (0.5kg) packaged.

Model: ACPC4610E

J2 J1

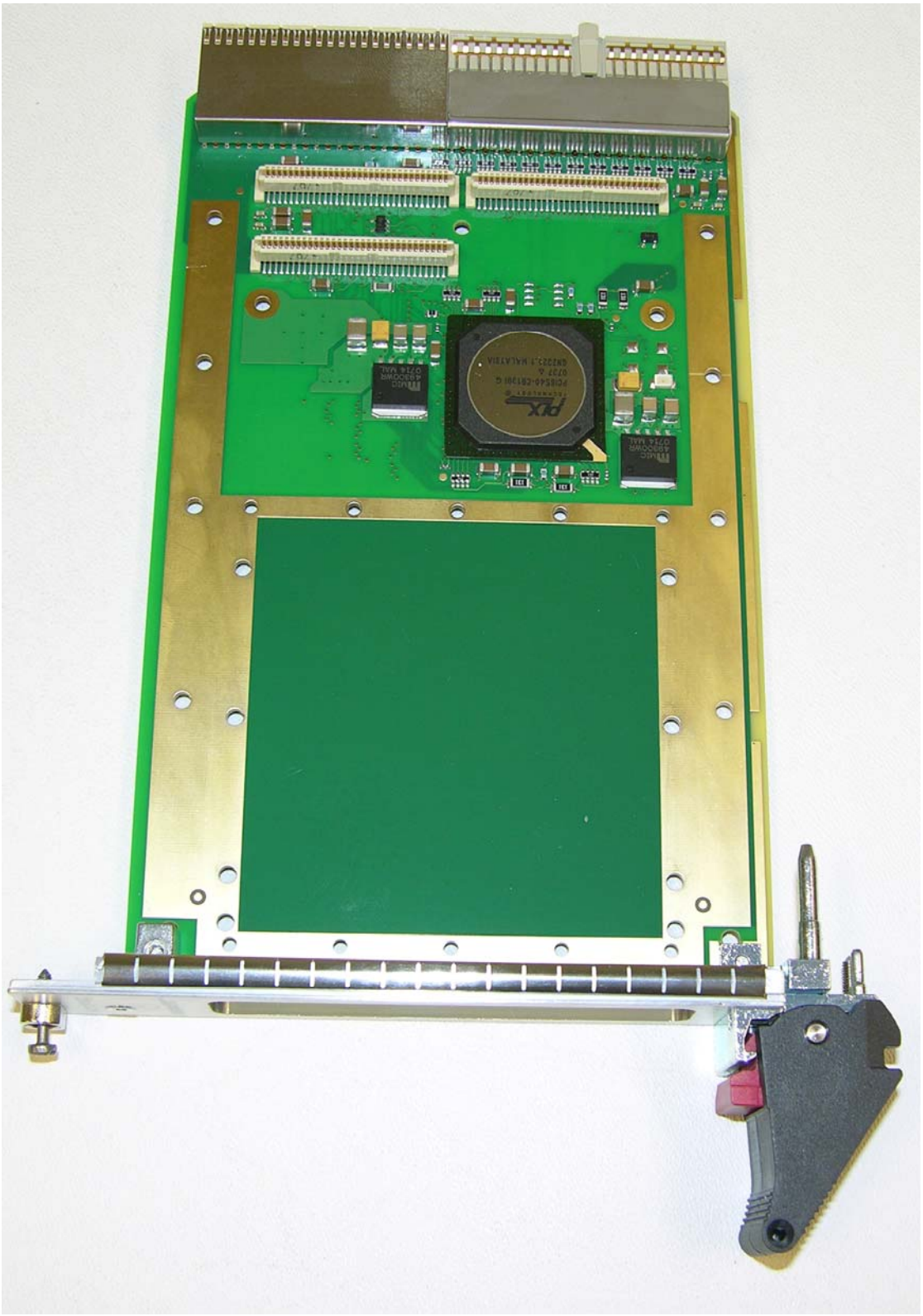

Model: ACPC4610CC

J2 J1

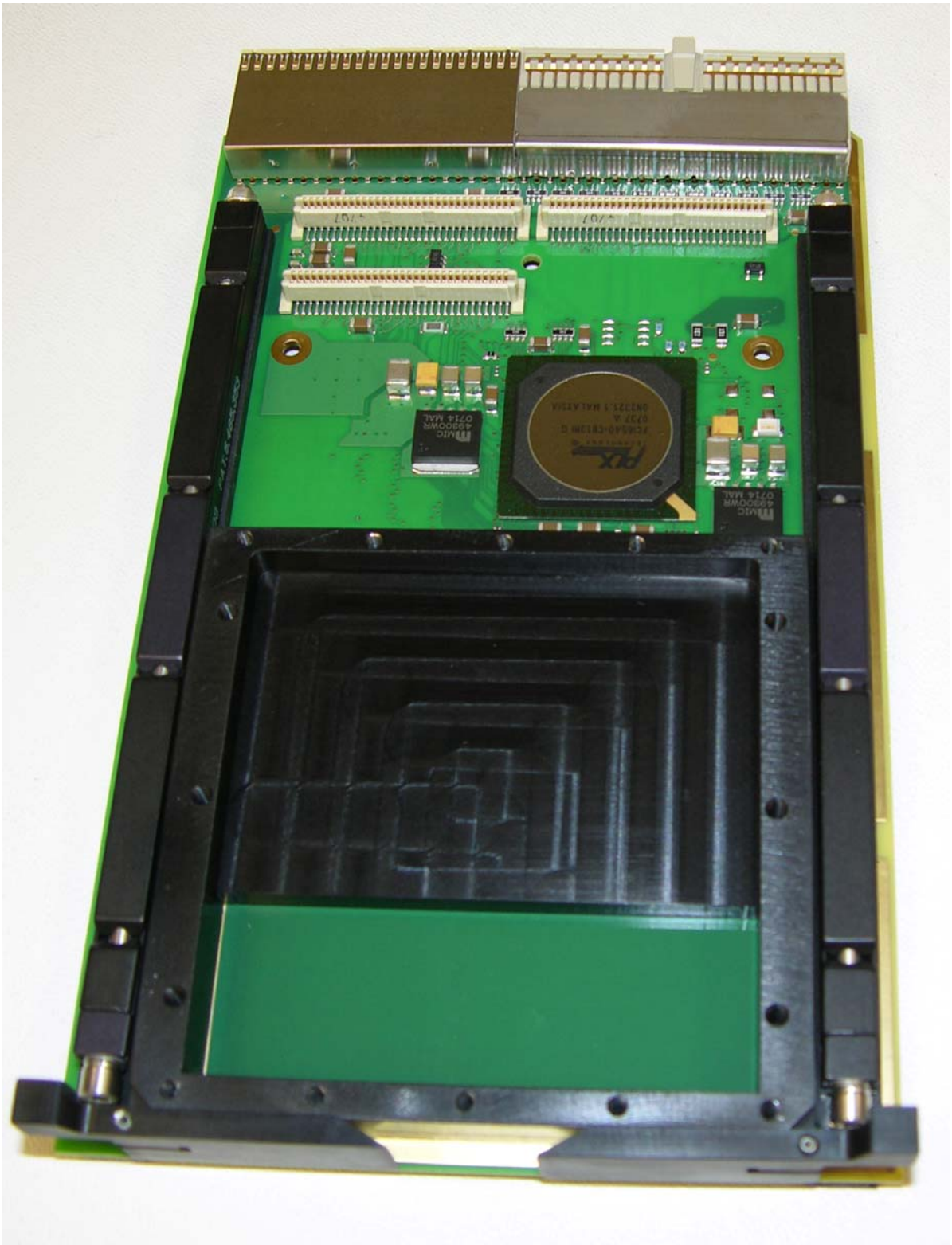

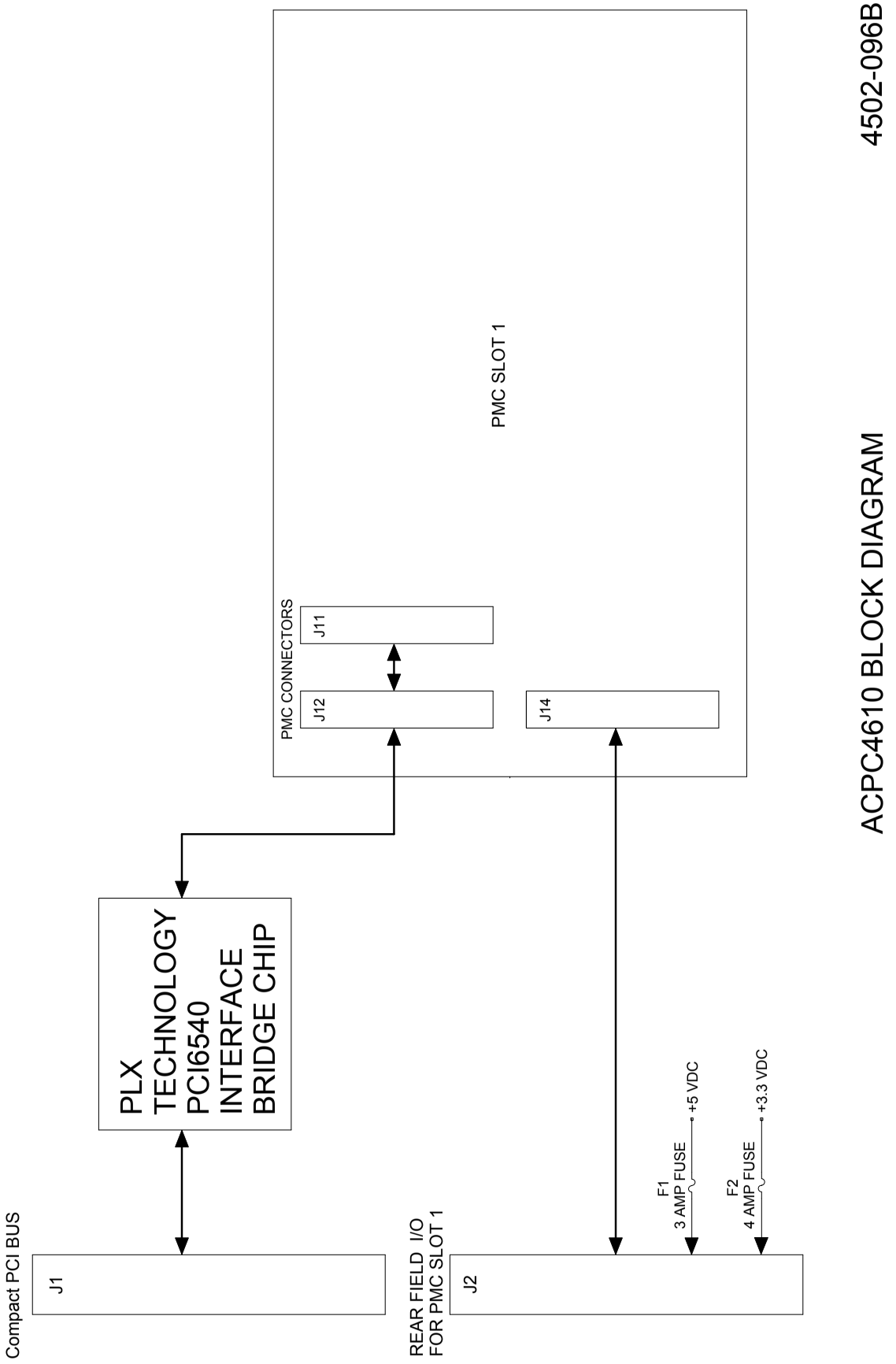
ACPC4610 BLOCK DIAGRAM
4502-096B
PMC SLOT 1
PMC CONNECTORS
J11
J12
J14
PLX
TECHNOLOGY
PCI6540
INTERFACE
BRIDGE CHIP
Compact PCI BUS
J1
REAR FIELD I/O
FOR PMC SLOT 1
J2
F1
3 AMP FUSE
+5 VDC
F2
4 AMP FUSE
+3.3 VDC

Model: TRANS-C4610

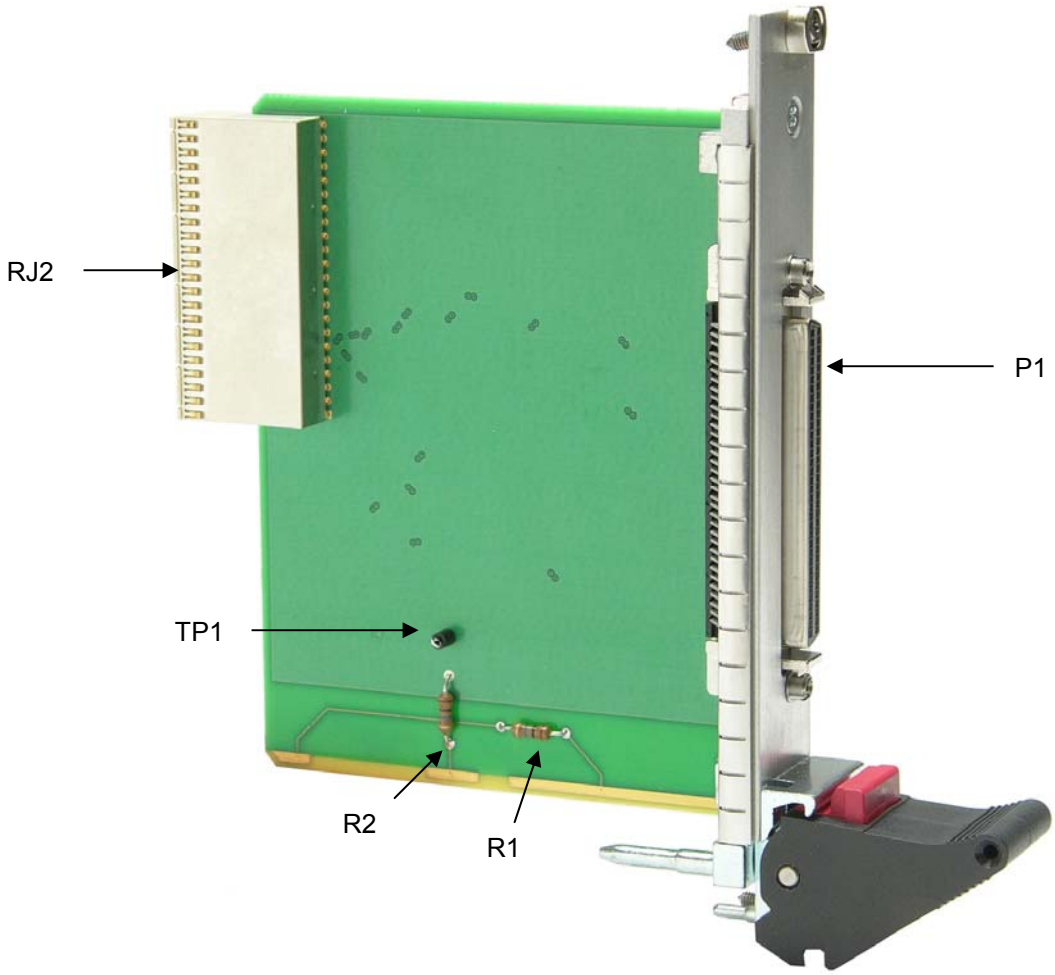

TRANS-C4610

P1, FIELD I/O SCSI-3 CONNECTOR - PMC SLOT "A"

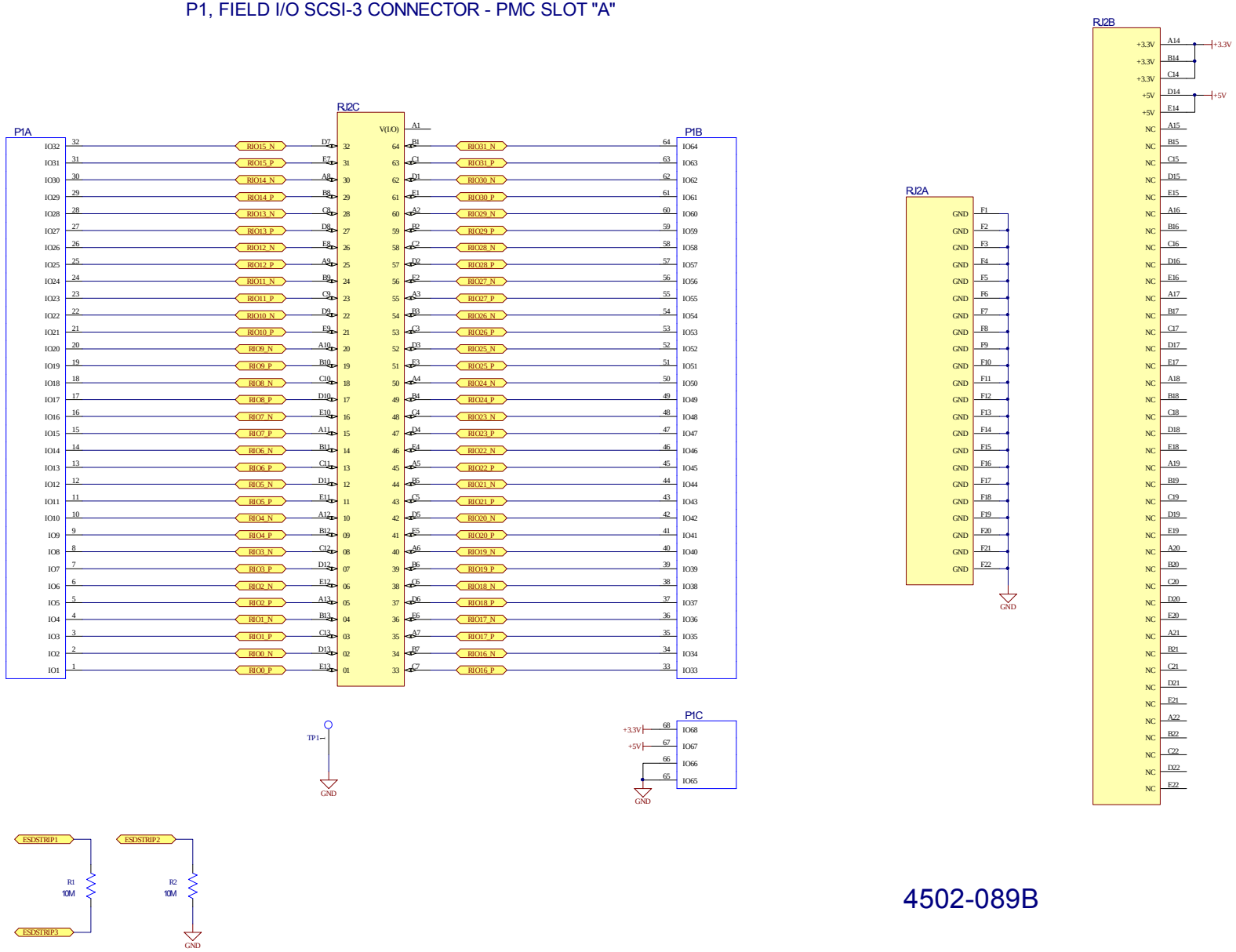

4502-089B

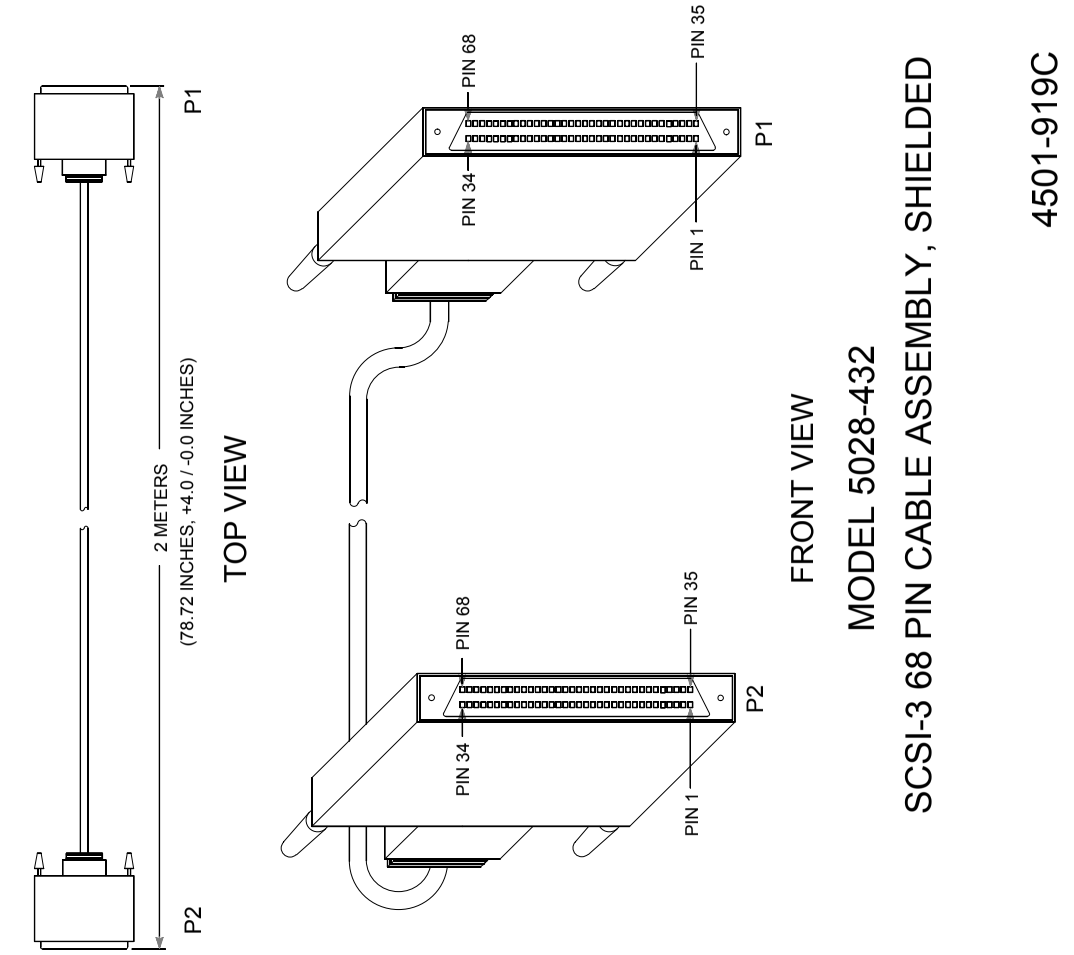
P1
2 METERS
(78.72 INCHES, +4.0 / -0.0 INCHES)
P2
TOP VIEW
PIN 68
PIN 35
PIN 34
PIN 1
P1
PIN 68
PIN 35
PIN 34
PIN 1
P2
FRONT VIEW
MODEL 5028-432
SCSI-3 68 PIN CABLE ASSEMBLY, SHIELDED
4501-919C

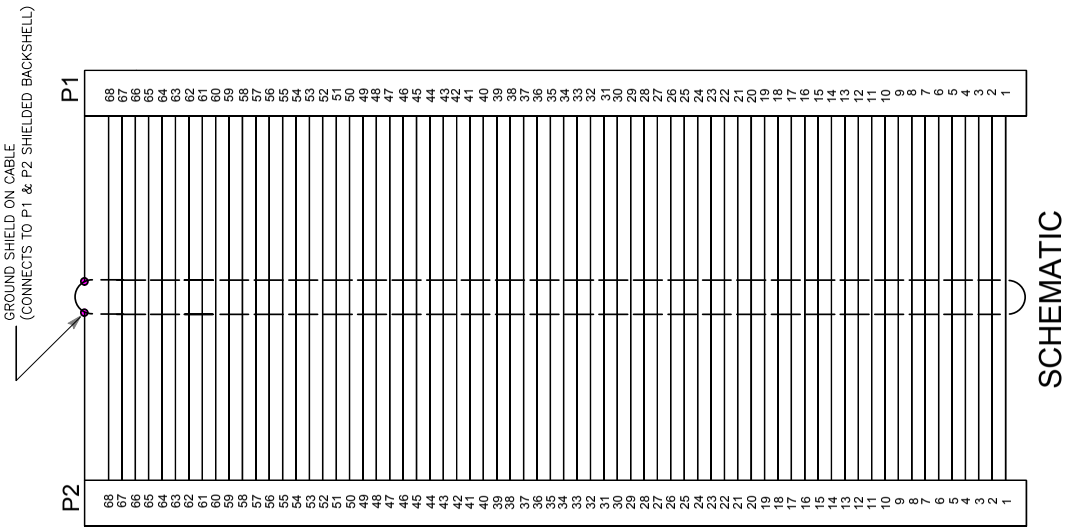
GROUND SHIELD ON CABLE
(CONNECTS TO P1 & P2 SHIELDED BACKSHELL)
P1
P2
SCHEMATIC

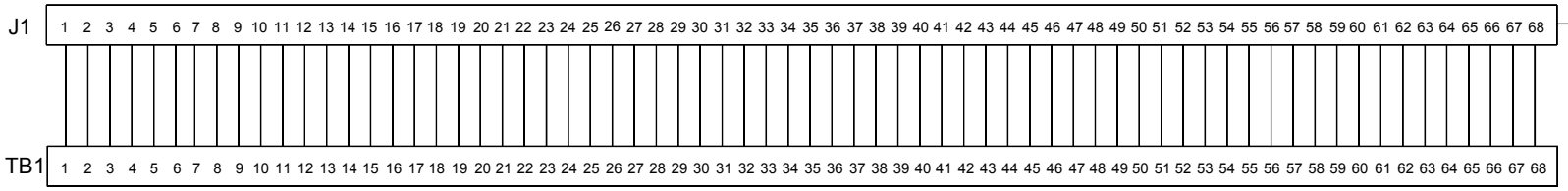

MODEL 5025-288 TERMINATION PANEL SCHEMATIC

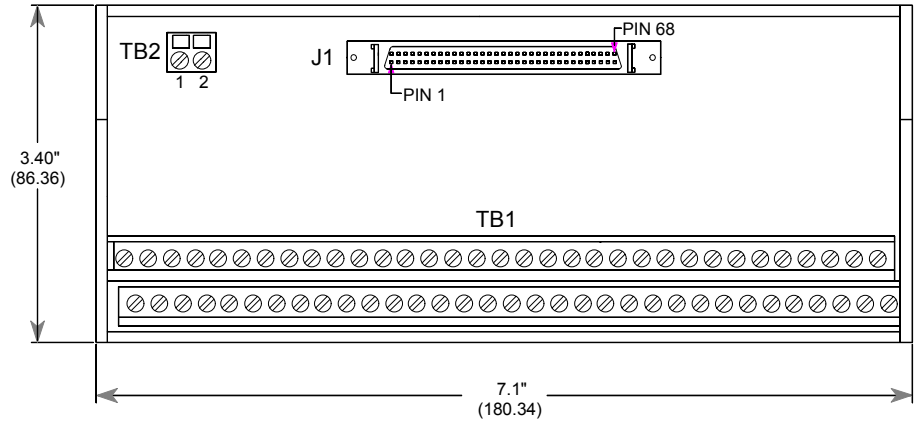

TOP VIEW

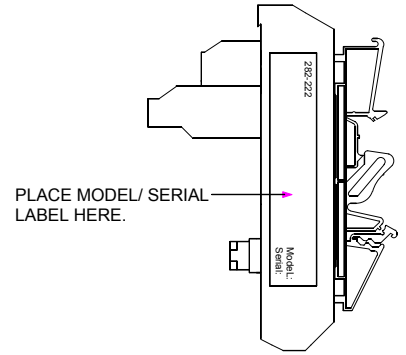

SIDE VIEW

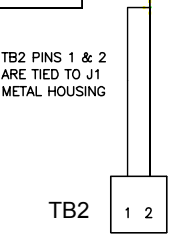

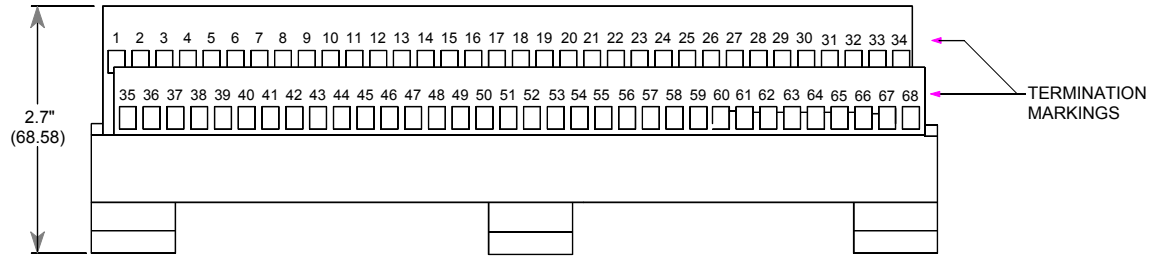

FRONT VIEW

NOTE:
DIMENSIONS ARE IN INCHES.
(MILLIMETERS)

4501-920B

Acromag, Inc. Tel: 248-295-0310 Fax: 248-624-9234 Email:solutions@acromag.com http://www.acromag.com

Certificate of Volatility				
Acromag Model: ACPC4610E ACPC4610CC TRANS-C4610	Manufacturer: Acromag, Inc. 30765 Wixom Rd Wixom, MI 48393			
Volatile Memory				
Does this product contain Volatile memory (i.e. Memory of whose contents are lost when power is removed) □ Yes ■ No				
Type (SRAM, SDRAM, etc.)	Size:	User Modifiable □ Yes □ No	Function:	Process to Sanitize:
Type (SRAM, SDRAM, etc.)	Size:	User Modifiable □ Yes □ No	Function:	Process to Sanitize:
Type (SRAM, SDRAM, etc.)	Size:	User Modifiable □ Yes □ No	Function:	Process to Sanitize:
Non-Volatile Memory				
Does this product contain Non-Volatile memory (i.e. Memory of whose contents is retained when power is removed) □ Yes ■ No				
Type(EEPROM, Flash, etc.)	Size:	User Modifiable □ Yes □ No	Function:	Process to Sanitize:
Type(EEPROM, Flash, etc.)	Size:	User Modifiable □ Yes □ No	Function:	Process to Sanitize: