vent productiPhone: 0870 080 2142
www.sxsevents.co.uk

MAC 600/E

user manual

www.sxsevents.co.uk

vent productiPhone: 0870-080 2342
www.sxsevents.co.uk
www.sxsevents.co.uk

© 1997 - 2002 Martin Professional A/S, Denmark.

All rights reserved. No part of this manual may be reproduced, in any form or by any means, without permission in writing from Martin Professional A/S, Denmark.

Printed in Denmark.

P/N 35000018 Rev. H

www.sxsevents.co.uk

vent products Phone: 0870 080 2142 Audio-visual Services
www.sxsevents.co.uk

section 1
INTRODUCTION
About this manual 4
Safety operations 4

section 2
SETUP
Unpacking 5
Installing or changing the lamp 5
Powering the fixture 5
Rigging the fixture in place 6
Connecting the serial link 7
Setting control protocol and address 8
Installing the snoot (optional) 8

section 3
OPERATION
Martin RS-485 control 9
DMX-512 control 9
Lamp control 9
Mechanical effects 10

section 4
CONTROL MODULE
Address and protocol selection 11
Personality settings 12
Readouts 13
Manual control 13
Test sequences 14
Utilities 14

section 5
MAINTENANCE AND BASIC SERVICE OPERATIONS
Removing the printed circuit board 15
Replacing the printed circuit board 15
Replacing fuses 16
Changing the XLR pin-out 16
Changing lenses 16
Cleaning the optical path 16
Cleaning the fans 16
Replacing the lamp 17
Optimizing lamp alignment 17
Changing voltage and frequency settings 17
Updating software 19

section 6
APPENDIXES
DMX protocol 20
Error messages 22
Troubleshooting 23
PCB layout 24
Specifications 25

www.sxsevents.co.uk

vent products Phone: 0870 080 2142
www.sxevents.co.uk email: sales@sxevents.co.uk

Thank you for selecting the MAC 600 from Martin. This intelligent moving-head Fresnel color changer is fast, quiet, and reliable. It delivers exceptionally bright light that instantly snaps or smoothly fades to virtually any color, at any intensity, anywhere on stage.

About this manual

This manual covers the MAC 600 with magnetic ballast and the MAC 600 E with electronic ballast. “MAC 600/E” is used to refer to both models when describing common features or procedures.

This manual describes the features of software version 2.4. The latest MAC 600/E software and documentation are available from the Service and Support area of the Martin web site at http://www.martin.dk.

Safety precautions

This product is for professional use only. It is not for household use.

This product presents risks of lethal or severe injury due to fire and heat, electric shock, ultraviolet radiation, lamp explosion, and falls. **Read this manual** before powering or installing the fixture, follow the safety precautions listed below and observe all warnings in this manual and printed on the fixture. If you have questions about how to operate the fixture safely, please contact your Martin dealer or call the Martin 24-hour service hotline at +45 70 200 201.

To protect yourself and others from electric shock

- Disconnect the fixture from AC power before removing or installing the lamp, fuses, or any part, and when not in use.
- Always ground (earth) the fixture electrically.
- Use only a source of AC power that complies with local building and electrical codes and has both overload and ground-fault protection.
- Do not expose the fixture to rain or moisture.
- Refer any service operation not described in this manual to a qualified technician.

To protect yourself and others from UV radiation and lamp explosion

- Never operate the fixture with missing or damaged lenses and/or covers.
- When replacing the lamp, allow the fixture to cool for at least 15 minutes before opening the fixture or removing the lamp. Protect your hands and eyes with gloves and safety glasses.
- Do not stare directly into the light. Never look at an exposed lamp while it is lit.
- Replace the lamp before usage exceeds the maximum service life, or if the lamp is defective or worn out.

To protect yourself and others from burns and fire

- Never bypass the thermostatic switch or fuses. Always replace defective fuses with ones of the specified type and rating.
- Keep all combustible materials (for example fabric, wood, paper) at least 1.0 meter (39 inches) away from the fixture. Keep flammable materials well away from the fixture.
- Do not illuminate surfaces within 1.0 meter (39 inches) of the fixture.
- Provide a minimum clearance of 0.1 meters (4 inches) around fans and air vents.
- Never place filters or other materials over the lens.
- Allow the fixture to cool for at least 5 minutes before handling.
- Do not modify the fixture or install other than genuine Martin parts.
- Do not operate the fixture if the ambient temperature (Ta) exceeds 40° C (104° F).

To protect yourself and others from injury due to falls

- When suspending the fixture, verify that the structure can hold at least 10 times the weight of all installed devices.
- Verify that all external covers and rigging hardware are securely fastened and use an approved means of secondary attachment such as a safety cable.
- Block access below the work area whenever installing or removing the fixture.
- Do not lift the fixture by its head.

www.sxevents.co.uk

vent p... Phone: 0870 080 2342
www.sxsevents.co.uk

section 2

SETUP

This section describes the simple steps required to prepare the MAC 600/E for operation.

Unpacking

The MAC 600/E package includes:

- 2 Fast-Lock Omega clamp brackets
- 5-meter XLR-XLR control cable
- Light snoot
- User manual

The packing material is carefully designed to protect the fixture during shipment - always use it or a custom MAC 500/600 flight case to transport the fixture.

Installing or changing the lamp

WARNING!

Disconnect the fixture from AC power before proceeding. Always wear safety goggles to protect your eyes and allow a hot lamp to cool for at least 15 minutes before removing it from the fixture.

The MAC 600/E works with the lamps listed on page 25. *Installing any other lamp may damage the fixture*. The lamp holder is pre-adjusted at the factory; precise alignment may be necessary due to slight variations between lamps. The procedure is described on page 17.

1. The MAC 600/E must be cool and isolated from AC power. Remove the 2 thumbscrews securing the lamp-socket assembly to the rear of the head. Pull out the lamp-socket assembly.
2. If changing the lamp, remove the old lamp from the socket.
3. Holding the new lamp by its ceramic base (do not touch the glass), insert it firmly and squarely into the lamp socket.
4. Clean the glass bulb with the cloth supplied with the lamp, particularly if your fingers touch the glass. A clean, lint-free cloth wetted with alcohol may also be used.
5. Keep the lamp wire between the fins as you insert the lamp-socket assembly into the head. Turn the assembly counterclockwise to align the holes with the spacer nuts. Replace the thumbscrews and tighten them by hand.
6. Before striking the lamp, reset the RLAH and RLST counters under the TIME menu to track lamp hours and lamp strikes. See page 13.

Powering the fixture

Check voltage and frequency settings

The settings must match the local AC power supply. These settings are printed on the serial number label on the base. If the settings do not match the local conditions, then the ballast and/or transformer must be rewired. See section 5 for details.

www.sxsevents.co.uk

vent product Phone 0870 870 2342
www.sxsevents.co.uk

WARNING!

Avoid electrical shock. The fixture must be grounded (earthed). The AC mains supply shall be fitted with a fuse or circuit breaker and ground-fault protection.

Install a plug on the power cord

You may need to install a cord cap that fits your supply on the power cable. A 3-prong grounding-type plug must be installed following the manufacturer's instructions. Connect the wires to the pins as listed below. Note: The table shows some possible pin identification schemes; if the pins are not clearly identified, or if you have any doubts about proper installation, consult a qualified electrician.

Wire Color	Pin	Symbol	Screw (US)
brown	live	"L"	yellow or brass
blue	neutral	"N"	silver
yellow/green	ground	⏚	green

Connect the MAC 600/E directly to AC power. *Do not connect it to a dimmer system; doing so may damage the fixture.* To apply power, set the power switch on the base to the "I" position.

Rigging the fixture in place

WARNING!

Use 2 clamps to rig the fixture. Lock each clamp with both 1/4-turn fasteners. The fasteners are locked only when turned fully clockwise.

Attach an approved safety cable to the base.

The MAC 600/E can be placed directly on the stage floor or rigged in any orientation on a truss. The integrated Fast-Lock system enables quick and easy fastening of the clamp adapters in 4 different positions as shown below.

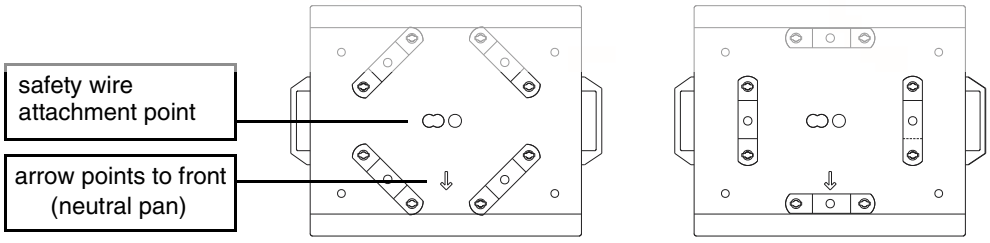

1. Verify that the rigging clamps (not included) are undamaged and can bear at least 10 times the weight of the fixture. Bolt the clamps securely to the clamp brackets with a grade 8.8 (minimum) M12 bolt and lock nut, or as recommended by the clamp manufacturer.
2. Tip the MAC 600/E on its side or install the clamps while the fixture is in the flight case.
3. Align a clamp with 2 mounting points. Insert the fasteners into the base and turn both levers a full 1/4-turn clockwise to lock. Install the second clamp.
4. Verify that the structure can bear at least 10 times the weight of all installed fixtures, clamps, cables, auxiliary equipment, etc.
5. Working from a stable platform, hang the fixture on the truss. The front is indicated by an arrow on the base.
6. Install a safety wire that can bear at least 10 times the weight of the fixture. The attachment point is designed to fit a caribiner clamp. *Never use the carrying handles for secondary attachment.*

www.sxsevents.co.uk

vent production hire Manufacturer Audio Visual Services
www.sxevents.co.uk emma@sxevents.co.uk

7. Tighten the rigging clamps securely to the structure.
8. Verify that there are no combustible materials or surfaces to be illuminated within 1 meter of the fixture, and that there are no flammable materials nearby.

Connecting the serial link

Tips for building a serial link

1. **Use shielded twisted-pair cable designed for RS-485 devices.** Standard microphone cable cannot transmit control data reliably over long runs; use only cable designed for RS-485 applications. 24 AWG cable is suitable for runs up to 300 meters (1000 ft). Heavier gauge cable and/or an amplifier is recommended for longer runs.
2. **Never use a "Y" connector to split the link.** To split the serial link into branches use a splitter such as the Martin 4-Channel Opto-Isolated RS-485 Splitter/Amplifier.
3. **Do not overload the link.** Up to 32 devices may be connected on a serial link.
4. **Terminate the link** by installing a termination plug in the output socket of the last fixture on the link. The termination plug, which is simply a male XLR connector with a 120 ohm, 0.25 watt resistor soldered between pins 2 and 3, "soaks up" the control signal so it does not reflect back down the link and cause interference. If a splitter is used, terminate each branch of the link.

Connecting fixtures

The MAC 600/E has locking 3-pin data input and output sockets that can be configured for use with either DMX or Martin Protocol controllers. **The default pin-out is configured to the DMX-512 standard**, i.e., pin 1 to shield, pin 2 to signal (-) and pin 3 to signal (+).

3-pin to 3-pin Phase-Reversing Cable	3-pin to 5-pin Phase-Reversing Cable	5-pin to 3-pin Phase-Reversing Cable	5-pin to 3-pin Straight Cable	3-pin to 5-pin Straight Cable
Connections Male Female 1 — 1 2 — 2 3 — 3	Connections Male Female 1 — 1 2 — 2 3 — 3 4 5	Connections Male Female 1 — 1 2 — 2 3 — 3 4 5	Connections Male Female 1 — 1 2 — 2 3 — 3 4 5	Connections Male Female 1 — 1 2 — 2 3 — 3 4 5
P/N 11820006	P/N 11820002	P/N 11820003	P/N 11820005	P/N 11820004

1. Connect the controller's data output to the MAC 600/E's data input. For a
   - **DMX controller with 5-pin output:** use a cable with 5-pin male and 3-pin female connectors such as P/N 11820005. Pins 4 and 5 are not used.
   - **DMX controller with 3-pin output:** use a cable with 3-pin male and female connectors such as the one supplied.
   - **Martin RS-485 Protocol controller**: use a phase-reversing cable, such as P/N 11820006, with 3-pin male and female connectors or reconfigure the XLR output.
2. Continue the link: connect the output of the fixture closest to the controller to the input of the next fixture. Use a phase-reversing cable when connecting a DMX-standard (pin 3 +) device to a Martin-standard (pin 3 -) device.
3. Insert a male 120 Ω XLR termination plug in the output of the last fixture on the link.

www.sxevents.co.uk

vent production Phone 0870 080 2142 Services
www.sxsevents.co.uk

Setting control protocol and address

One of the operating modes shown below must be selected. Factors to consider when selecting a mode will depend on your controller and are discussed in the next section. Maximum flexibility is provided in mode 4.

Each fixture must be assigned its own channels to receive instructions from the controller. The address, also known as the start channel, is the first channel used. Addresses are independent of the physical link: they may be set in any convenient order. Two MAC 600/E's may share the same address; however, they will receive the same instructions and independent control will not be possible.

Mode	Martin	DMX 1	DMX 2	DMX 3	DMX 4
Movement speed	Vector	Tracking		Tracking and/or Vector	
Pan/tilt resolution	16 bit	8 bit	16 bit	8 bit	16 bit
Channels	2	10	12	12	14

1. Switch on the MAC 600/E.
2. You may push **[MENU]** and **[ENTER]** simultaneously to disable pan and tilt reset. This is handy if you want to change settings while the MAC 600/E is in a flight case. As the fixture does not run through the entire reset procedure, error messages will be displayed. This is not a fault with the fixture. The reset procedure can take 2 - 3 minutes.
3. Press the **[MENU]** key once, and then press the **[↑]** or **[↓]** keys repeatedly until the display shows `PSET`. Press **[ENTER]** to confirm.
4. Press **[↑]** or **[↓]** until the desired protocol, as shown in the above table, appears on the display. Press **[ENTER]** to confirm.
5. Press **[↑]** or **[↓]** repeatedly until the display shows either `dAdr` or `MAdr`, depending on whether you wish to select a DMX address or Martin address, respectively. Press **[ENTER]** to confirm.
6. Press **[↑]** or **[↓]** repeatedly until the desired address is displayed. Press **[ENTER]** to confirm.

Press [MENU] to return to the main menu. The address is displayed. Address and protocol settings are saved when the power is switched off.

Installing the snoot (optional)

1. Bend the tabs 90°.
2. Bend the ring into a circle with the tabs on the outside. Weave the end tab through the 3 slots.
3. Insert the tabs between the 3 pairs of pins between the lens and the head cover.

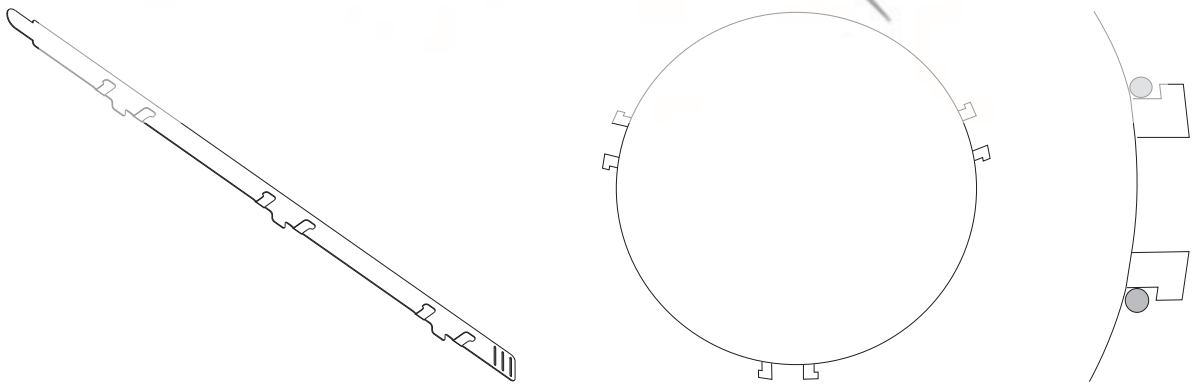

1 2 3

www.sxsevents.co.uk

vent production and hire Audio Visual Services
www.sxevents.co.uk mail@sxevents.co.uk

This section describes the MAC 600/E's controllable features and the options for customizing them for your application. Option selection is described in the next section.

Martin RS-485 control

The MAC 600/E may be controlled with the Martin 3032 controller. For the fixture to respond, either the protocol setting (PSET) must be set to Martin (MART) as described in the previous section, or automatic protocol detection (SPEC/AUTO) must be enabled.

DMX-512 control

Tracking mode

In tracking mode the speed at which an effect moves is determined by the controller's fade time. The effect tracks the fade from one DMX value to another and a digital filter algorithm ensures smooth movement at all fade speeds.

There are 2 selectable tracking algorithms to provide extremely smooth movement with any controller. Algorithm 1 calculates speed based on the absolute value of DMX changes; it is recommended for use with most controllers. Algorithm 2 uses the real value of DMX changes to calculate speed and may provide smoother movement if the controller-calculated DMX values are uneven.

The number of samples, that is, changes in DMX values, used by both algorithms to calculate speed is selectable between a level of 1 to 10. The ideal setting will vary from controller to controller - experiment for best results. Increasing the number of samples makes movement less responsive to sudden DMX changes and smoother as a result.

Vector mode

In vector mode, 2 speed channels provide a way to control the effects' speed with controllers that do not have programmable fade times. This mode may result in smoother movement when using a controller with a slow or irregular refresh rate. Vector mode also provides a "blackout" speed and overrides of the pan/tilt speed (PTSP), shortcut (SCUT), and studio mode (MOdE) menu settings.

In vector mode the controller fade time should be set to 0, i.e., the position bumps from one value to the next. However, controller fade times can be enabled by setting the speed channel between 0 and 2.

8-bit versus 16-bit pan/tilt resolution

With 8-bit pan/tilt resolution, the pan and tilt are divided into 256 equal increments. Finer position control and smoother movement is provided in the 16-bit modes.

Lamp control

A peak of electric current that can be many times the operating current is drawn for an instant when striking the lamp. Striking many lamps at once causes a voltage drop that can prevent lamps from striking and trip the main circuit breaker. To avoid this, strike lamps at 5 second intervals.

Lamp on (lamp strike)

The MAC 600/E can be set to automatically strike within 90 seconds of being powered on by setting Automatic Lamp On (SPEC/ALON) to ON. A delay determined by the fixture address prevents all lamps from striking at the same time. This option is set to off by default.

Lamp power can be switched on and off remotely from the controller. (For DMX commands see page 20.) Once the lamp is on, additional lamp-on commands have no effect. **If the lamp fails to strike in the MAC 600 E, repeated lamp-on commands will fail until a lamp-off command is executed or fixture power is cycled off and on.**

Lamp off

Power to the lamp can be turned off from a DMX controller by sending a value from 248 to 255 on channel 1 for 5 seconds if:

- DMX Lamp Off (SPEC/dLOF) is set to on, or
- DMX Lamp Off (SPEC/dLOF) is set to off (default) and the CMY values on channels 3, 4, and 5 are from 230 to 232.

Be careful: it is not possible to strike the lamp for 8 minutes after executing a lamp-off command. The MAC 600/E however, will store a lamp-on command and strike the lamp when the 8 minutes have elapsed.

www.sxevents.co.uk

vent pod tel 0870 080 2142 services
www.sxsevents.co.uk

Reduced-power mode (MAC 600E)

With the MAC 600 E, lamp power falls to 400 watts for cooler operation and longer lamp life when the shutter is closed for 10 seconds. Power instantly returns to full when the shutter opens. Reduced-power mode with the shutter open can be forced by setting the MAC 600 DMX control channel to 120 - 129.

Mechanical effects

All mechanical effects are reset to a “home” position when the fixture is powered up. The fixture can also be reset via DMX if DMX reset (SPEC/dRES) is enabled. There is also a combination of DMX values that allows you to reset the MAC 600/E even if this feature is disabled; see the DMX protocol for details.

An on-the-fly position correction system automatically corrects the position of the effect wheels. This feature can be disabled by setting effects feedback (SPEC/EFFb) to OFF.

General operation may be optimized for speed or quietness with the studio mode setting (MOdE).

Pan and tilt

The moving head can be panned 440° and tilted 306°. The middle of the pan range is perpendicular to the front of the fixture, as indicated by the arrow on the base. Movement may be optimized for speed by setting the pan/tilt speed (PTSP) personality to FAST, or for smoothness by setting it to NORM. The setting may be overridden on the speed channel in vector mode. Movement is disabled if lamp feedback is lost - indicating a blown lamp - to prevent possible damage or injury due to glass fragments.

Setting the movement speed to “blackout” in vector mode causes the shutter to black out the light while the head is moving.

The pan and tilt DMX channels can be inverted and/or swapped for convenience using the pan/tilt (PATI) menu.

Color wheel

The color wheel has red, green, and blue dichroic color filters plus a 5600K to 3400K color correction filter and open white. The wheel can be scrolled, allowing for split color effects, snapped to fixed positions, and continuously rotated in both directions at different speeds.

The Shortcuts (SPEC/SCUT) setting determines whether the wheel takes the shortest path to the next position or turns in one direction only. The setting may be overridden on the speed channel in vector mode.

Setting the color speed to “blackout” in vector mode causes the shutter to black out the light while the wheel moves.

CMY subtractive color mixing

The CMY color mixing system is based on three graduated dichroic color filters: cyan, magenta, and yellow. Each color can be added from 0 to 100%. A very wide range of colors may be achieved by varying the amount of each color. Since the CMY system is subtractive, mixing 3 colors together results in a loss of light. For maximum brightness, mix 2 colors at a time. Three speed random CMY color mixing is available at the top of channel 6.

The Shortcuts (SPEC/SCUT) setting determines whether the wheels take the shortest path to the next position or turn in one direction only. The setting may be overridden on the speed channel in vector mode.

Beam shapers and frost

Two beam shapers allow you to widen and flatten the beam. Beam shaper 1 rotates 180° and beam shaper 2 rotates 90°. They may be combined to drag the beam horizontally and vertically to increase the beam size.

A frost filter on the same wheel as beam shaper 2 softens the beam.

Dimmer

The mechanical dimmer provides smooth, high-resolution 100 percent dimming.

Shutter

The high-speed mechanical shutter opens and closes the light instantly. Light can be flashed at up to 8 Hz and there is a DMX-callable random strobe function.

If the auto shutter function (SPEC/ASHT) is enabled, the shutter, which is faster than the dimmer, automatically closes when the dimmer receives a command to close “instantly” to provide faster blackouts.

www.sxsevents.co.uk

vent p... section 5 ... CONTROL MODE ... 0870 780 3143
... mail@sxevents.co.uk

The Wright DP control panel and the MAC 600/E allows you to set the address and personalities, read lamp hours and other information, calibrate effects, control the fixture manually, and run a test routine. Most of these functions may be performed remotely via the serial link with a Martin MPBB1 or MP-2 uploader.

The display can be flipped for easy reading by pressing the [↑] and [↓] keys simultaneously. The intensity is adjustable and the display can be set to go out 2 minutes after the last key-press.

The DMX or Martin address, depending on the protocol setting, and any error messages are displayed when the MAC 600/E is turned on. To enter the menu, press [MENU]. Use the [↑] and [↓] keys to move within the menu. To select a function or sub-menu, press [ENTER]. To escape a function or menu, press [MENU].

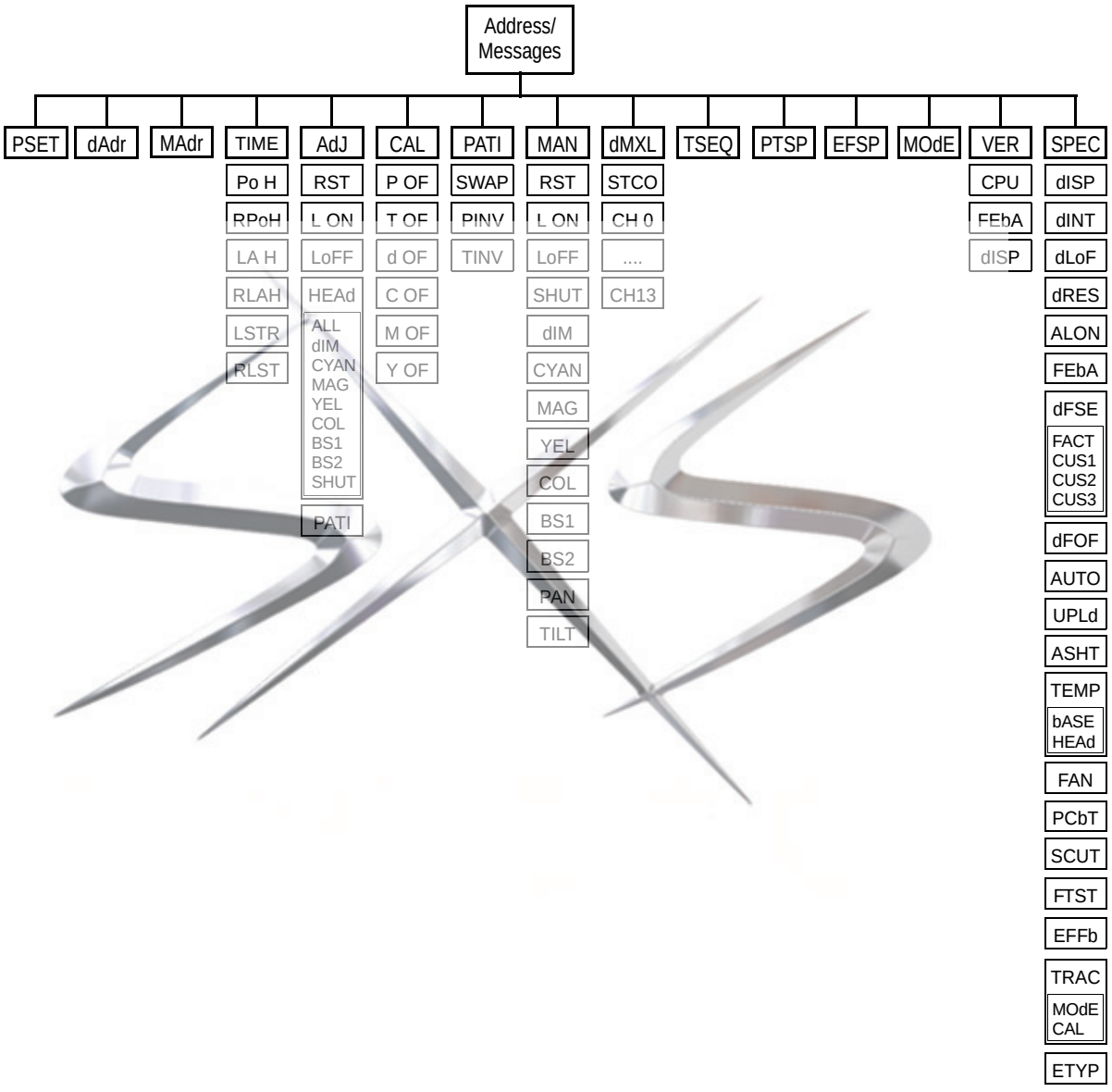

Address and protocol selection

Protocol selection (`PSET`): Switch between `MART`, `DMX1`, `DMX2`, `DMX3`, or `DMX4` to enable Martin mode or DMX mode 1, 2, 3, or 4.

DMX address (`dAdr`): Set the DMX address between channel 1 and 512.

Martin address (`MAdr`): Set the Martin address between channel 1 and 31.

www.sxevents.co.uk

vent pro ductsby nam ed Ad am Hall 0870 080 2142 services
www.sxevents.co.uk info@sxevents.co.uk

Personality settings

Personality	Path	Options	Effect (Default settings shaded.)
Pan/tilt speed	PTSP	FAST	Optimize movement for speed.*
		NORM	**Optimize movement for smoothness.***
Pan/tilt swap	PATI/SWAP	ON	Map DMX pan control to tilt channel and vice versa.
		OFF	**Normal pan and tilt control.**
Pan inverse	PATI/PINV	ON	Reverse DMX pan control, right → left.
		OFF	**Normal pan control, left → right.**
Tilt inverse	PATI/TINV	ON	Reverse DMX tilt control, down → up.
		OFF	**Normal tilt control, up → down**
Tracking algorithm	SPEC/TRAC/MOdE	MOd1	**Absolute delta value algorithm (for most controllers)**
		MOd2	Real delta value algorithm
Tracking samples	SPEC/TRAC/CAL	1-10	**Tracking samples. Increase if pan/tilt is not smooth.**
Effects speed	EFSP	FAST	**Normal, full speed operation.**
		SAFE	Reduced speed operation (mainly for early models).
Display on/off	SPEC/dISP	ON	**Display stays on.**
		OFF	Display goes out 2 minutes after last key press.
Display intensity	SPEC/dINT	10-100	Adjust display intensity.
DMX lamp off	SPEC/dLOF	ON	Enable DMX lamp off command.
		OFF	**Disable DMX lamp off command.***
DMX reset	SPEC/dRES	ON	Enable DMX reset command.
		OFF	**Disable DMX reset command.***
Automatic lamp on	SPEC/ALON	ON	Lamp strikes automatically within 90 seconds of power on.
		OFF	**Strike lamp from controller.**
Automatic protocol detection	SPEC/AUTO	ON	Enable automatic protocol detection.
		OFF	**Disable automatic protocol detection.**
Shortcuts	SPEC/SCUT	ON	**Effect wheels turn the shortest direction.***
		OFF	Effect wheels always turn same direction.*
Automatic shutter	SPEC/ASHT	ON	**Shutter "helps" dimmer black out.**
		OFF	Shutter not affected by dimmer commands.
Studio mode	MOdE	NORM	**Optimize effects for speed.***
		STUd	Optimize effects for silence.*
Pan/tilt feedback	SPEC/FEbA	ON	**Enable pan/tilt position correction system.**
		OFF	Disable pan/tilt feedback. Setting not saved.
Effects feedback	SPEC/EFFb	ON	**Enable feedback on effect wheels.**
		OFF	Disable feedback on effect wheels.
Fan speed	SPEC/FAN	REG	**Enable automatic fan speed regulation.**
		FULL	Set fan speed to full.
Electronic ballast type	SPEC/ETYP	**SCHI**	**Select Schiederwerk ballast (MAC 600 E's after S/N 4020700000)**
		MITR	Select Mitronic ballast (MAC 600 E's with date-based S/N or before S/N 4020700000)

* Setting may be overridden via DMX. See the protocol for details.

www.sxevents.co.uk

vent pro Readouts Phone 0870 080 2142
www.sxeq Usage readouts (TIME) ess@sxsevents.co.uk

Read the total number of power-on hours (PoH), power-on hours since last reset (RPoH), total lamp hours (LAH), lamp hours since last reset (RLAH), total number of lamp strikes (LSTR), and the number of lamp strikes since last reset (RLST).

The resettable counters may be used to track overall usage and lamp life. To reset to zero, display the readout and then press [↑] for 5 seconds.

DMX value readouts (dMXL)

Read the DMX start code (STCO) and DMX values received for each channel. This is an easy way to check that the start code is 0 and that the fixture is receiving the expected commands.

If the fixture is set to a DMX mode where some or all of the channels between 10 and 13 are not used, the readout on these channels will be N/A. Note: the channel number is 1 less in the readout than it is in the DMX protocol.

Software version readouts (VER)

Read the version number of the CPU software (CPU), pan/tilt feedback circuit (FEbA), and display module software (dISP). The CPU software version is also displayed for a moment at power up.

Temperature readouts (SPEC/TEMP)

Read temperature in the base (bASE) and head (HEAd) in Celsius. Temperatures below 25° C are shown as -25; temperatures above 100° C are shown as +100.

The temperature sensors are calibrated at the factory and adjustment should not be necessary. The following procedure calibrates the sensors if they give no or faulty readings.

1. Allow the unit to cool to room temperature (powered off for at least 4 hours).
2. Measure the room temperature in Celsius. (To convert F° to C°, subtract 32° and then multiply by 0.555.)
3. Power up the unit and allow it to reset.
4. Press the [MENU] and [↓] keys at the same time and hold them for 3 seconds until “25” shows in the display.
5. Press the [↑] and [↓] keys until the display shows the temperature measured.
6. Press [ENTER] to save the setting.

Manual control

Manual control (MAN)

The manual control menu permits you to do the following without a controller:

- reset the fixture (RST)
- turn the lamp on and off (L ON, LoFF)
- open, close, and strobe the shutter at 3 speeds (SHUT)
- control the dimmer (dIM)
- control the CMY wheels (CYAN, YEL, MAG)
- move the color wheel to each position (COL)
- control both beam shapers (BS1, BS2)
- control pan and tilt (PAN, TILT)

www.sxsevents.co.uk

vent products Phone: 0870 080 2342 Services
www.sxsevents.co.uk

Adjustment (ADJ)

The adjustment menu provides manual control for making mechanical adjustments. These should only be performed by a qualified technician. The menu provides functions to reset the fixture (RST), turn on and off the lamp (L ON, LoFF), control all effects in the head (HEAd), and move the head to the home and extreme positions (PAFI). The HEAd submenu contains functions to:

- move ALL effects to the OPEN, SPOS (sensor position), and APOS (adjustment position - requires special tool).
- move each effect individually to the open, sensor, and adjustment positions. The shutter has a closed position instead of a sensor position.

Test sequences

Test sequence (TSEQ)

Run a general test of all effects.

Printed circuit board test (SPEC/PCBT)

3 tests of the circuit board for service use.

Factory test (SPEC/FTST)

An effects test (WTST), a movement test (MTST), and a sensor test (STST) used for factory quality control. The sensor test includes programs for testing sensors on the effect wheels.

Utilities

Calibration (CAL)

The calibration menu allows you to adjust the effects to achieve total uniformity between fixtures: it is not a substitute for mechanical adjustment. Pan (P OF), tilt (T OF), dimmer (d OF), cyan (C OF), magenta (M OF), and yellow (Y OF) may be selected and adjusted from 1 to 255 with the arrow keys. Press [ENTER] to save the calibration.

Reset default offsets (SPEC/dFOF)

Reset all calibrations to their factory defaults. Select dFOF and press [ENTER] when SURE is displayed, or press [MENU] to escape.

Reset default personality settings (SPEC/dFSE/FACT)

Return all personality settings (not calibrations) to their factory defaults. Select FACT and press [ENTER] when LOAD is displayed.

Custom configurations (SPEC/dFSE/CUS1, CUS2, CUS3)

Save and load 3 sets of custom configurations. To save a custom configuration, adjust the settings as desired, go to CUS1, CUS2, or CUS3 and press [ENTER] when SAVE is displayed. To load a custom setting, select it and press [ENTER] when LOAD is displayed.

Upload mode (UPLd)

Upload mode prepares the MAC 600/E to receive control software. It is normally engaged automatically by the upload device. In certain circumstances, however, you may have to set upload mode manually as described under “Updating software” on page 19.

www.sxsevents.co.uk

vent product Phone 0870 080 2142 Services
www.sxsequents.co.uk

section 5

MAINTENANCE AND BASIC SERVICE OPERATIONS

www.sxsevents.co.uk

The MAC 600/E requires regular maintenance to keep performing at its optimum. The maintenance schedule will be dependent upon the operating environment. Dirty lenses and filters reduce the light's brightness. Cooling fans covered by dust may cause overheating, thus causing the thermostat to cut out the lamp intermittently. This section takes you through the general maintenance procedures and describes some basic service operations.

W A R N I N G !

All service procedures that require removing covers shall be performed by a qualified technician.

Disconnect from AC power before removing any cover or part.

Removing the printed circuit board

1. Disconnect the fixture from AC power.
2. Remove the flat plate from the top of the front side of the base. Do not remove the curved side plates.
3. Unplug the white plastic wire connectors from the top of the printed circuit board. To unplug a connector, hold the plastic connector - never pull the wires - and pull it straight off the pins.
4. Grasp the black pins on either end of the circuit board and gently pull it out. You may have to guide some wires past the motor housing. Be careful not to knock the copper heat sinks.

Replacing the printed circuit board

1. Gently put the circuit board back into the base. You may have to guide some wires past the motor housing. Push the black pins down to lock the board in place.

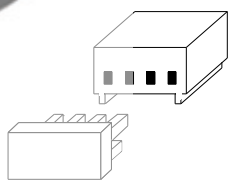

2. Reconnect the wire connectors. Each connector (except for the 2 fan connectors and the control module connector) is labelled. Fit the female over the male with the "rails" on the female connector over the "tongue" on the male connector. Your MAC 600/E may or may not have unused connectors PL301 and PL302. Starting from the end with the copper heat sinks, the connection order is:

PL551 TILT	PL531 PAN	PL521 SHUT	PL511 BEAM2	PL501 BEAM1	PL441 COLOR	PL431 YELL	PL421 MAG	PL411 CYAN	PL401 DIM	PL301 not used	PL304 2-pin fan	PL303 4-pin fan	PL302 not used	PL203 OPTO2	PL202 OPTO1	PL201 display

3. Replace the top cover.

www.sxsevents.co.uk

vent products from A870 Sussex Services
www.sxevents.co.uk

Replacing fuses

The main fuse is located above the XLR output and is replaced by unscrewing the holder with a screwdriver or small coin. The secondary fuses are located on the printed circuit board and are replaced as follows.

1. Remove the printed circuit board as described above.
2. Locate and replace the defective fuse with one of the same rating. The fuses are shown on the PCB layout diagram on page 24 as F601, F602, and F603. Their values are listed on page 25.
3. Replace the printed circuit board.

Changing the XLR pin-out

1. Remove the printed circuit board as described above.
2. Position the jumpers for the desired XLR pin-out as shown.
3. Replace the printed circuit board.

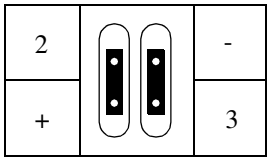

Martin pin-out

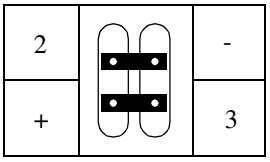

DMX pin-out

Changing lenses

WARNING

Attach the safety wire to the front head section.

18° and 65° field angle options are available for the MAC 600/E. (See "Accessories" on page 26.) The lens is mounted on a snap-lock "lens hood" or front section that attaches easily to the head. Simply release the snap locks and unhook the safety wire to remove the standard lens front. Hook the safety wire to the same location on the optional front and snap the locks closed.

IMPORTANT

The long front (18° option) does not fit in some flight cases.

The 18° front is longer than the standard front; the MAC 600/E fitted with this option fits only in flight cases produced after September, 1997. These can be identified by the outside measurements: 894 mm (35.2") from bottom to top, including wheels. Older flight cases measure 860 mm (34") from bottom to top, including wheels, on the outside.

Verify that the flight case is of the newer type before shipping MAC 600/Es fitted with the 18° long front.

Cleaning the optical path

Cleaning and servicing components in the head is best left to qualified Martin technicians.

To access the optical components, remove the head cover. Remember to attach the internal safety cable when reassembling the head.

Be very careful if you decide to clean the optical components. The colored surface on the dichroic filters is achieved by means of special multi-layer coatings and even small scratches in these might be visible. Residues left from cleaning fluids can bake onto and ruin the component.

Wash dirty lenses and filters with isopropyl alcohol. Rinse with distilled water: mixing the water with a small amount of wetting agent such as Kodak Photoflo will help prevent streaking and spotting. Dry with a clean, soft and lint-free cloth or blow dry with compressed air. A generous amount of regular window glass cleaner may also be used, but no residues may remain.

Cleaning the fans

To ensure proper cooling of the fixture it is important that the fans are free of dust. Clean the fans with a vacuum or damp cloth if they are dirty.

www.sxevents.co.uk

vent products from Adam Hall 0870 873 2142 services
www.sxequipment.co.uk sxsevents.co.uk

Replacing the lamp

The risk of lamp explosion increases with lamp hours as the quartz envelope gradually weakens. It is recommended that lamp [illegible] at 125 hours of the maximum rated lamp life.

The procedure for installing the lamp is described on page 5. After installing the lamp, reset the RLAH and RLST counters under the TIME menu as described page 13.

Optimizing lamp alignment

The lamp alignment is set at the factory. If, however, the distribution of light does not appear even, lamp alignment can be adjusted.

1. Switch on the MAC 600/E and allow it to reset.
2. Using either a controller or the control module, turn on the lamp and aim the light towards a flat surface.
3. Center the hot-spot (the brightest part of the beam) using the 3 allen-head (3 mm) adjustment screws. Turn one screw at a time to drag the hot-spot diagonally across the projected image. If you cannot detect a hot-spot, adjust the lamp until the light is even.
4. To reduce a hot-spot, pull the lamp in by turning all three screws clockwise 1/4-turn at a time until the light is evenly distributed.
5. If the light is brighter around the edge than it is in the center, or if light output is low, the lamp is too far back in the reflector. “Push” the lamp out by turning the screws counterclockwise 1/4-turn at a time until the light is bright and evenly distributed.

Changing voltage and frequency settings

The voltage and frequency settings must match the local AC power supply! These settings are printed on the serial number label on the bottom of the base. Using the wrong setting can cause overheating, fixture damage, and/or poor performance.

MAC 600 (magnetic ballast)

1. *Disconnect the MAC 600 from AC power.* Remove the top covers.
2. Find the correct transformer and ballast terminals for your AC supply in the table below. Consult a qualified electrician if you do not know the AC frequency and voltage.

AC Supply		Transformer		Magnetic Ballast	
Frequency	Voltage	Voltage	Terminal	Setting	Terminal
50 Hz	200-210 V	210 V	4	200 V / 50 Hz	7
50 Hz	210-220 V	210 V	4	230 V / 50 Hz	10
50 Hz	220-235 V	230 V	6	230 V / 50 Hz	10
50 Hz	235-240 V	230 V	6	245 V / 50 Hz	12
50 Hz	240-260 V	250 V	8	245 V / 50 Hz	12
60 HZ	200-217 V	210 V	4	208 V / 60 Hz	4
60 HZ	217-240 V	230 V	6	227 V / 60 Hz	7

3. Locate the transformer: it is on the left end, near the power switch. Move the BROWN and RED transformer wires to the correct terminal. The terminal number is printed in front of the connection tab.
4. Locate the magnetic ballast: it is on the opposite end from the transformer, near the control panel. Move the BROWN ballast wire to the correct terminal. The terminal number is printed in front of the connection tab.
5. Replace the top covers before applying power.

www.sxsevents.co.uk

vent products Phone: 0870 080 2342 Services
www.sxsequents.co.uk

MAC 600 E (electronic ballast)

The electronic *ballast* works at any voltage between 100 and 250 volts, and at any frequency between 50 and 60 Hz.

1. *Disconnect the fixture from AC power.* Remove the top covers.
2. Tap the *transformer* for the local supply voltage as shown below.
3. Verify that the primary fuse, which is located near the power switch, is correct for the voltage setting. Use a T 6.3 A fuse when the transformer is set at 200, 210, 220, 230, or 240 V. Use a T 10 A fuse when it is set at 100, 110, or 120 V.
4. Replace the top covers before applying power.

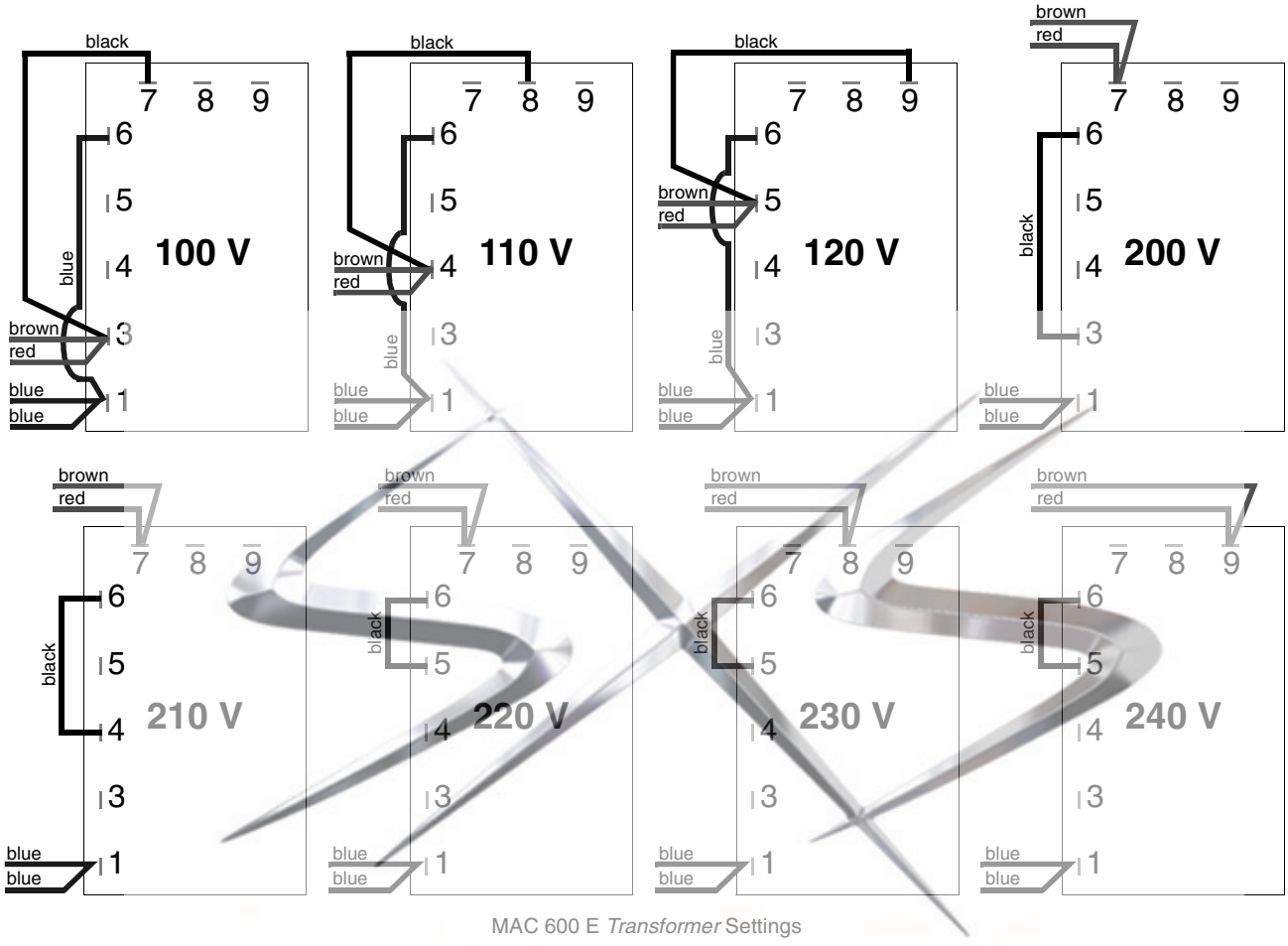

MAC 600 E *Transformer* Settings

www.sxsevents.co.uk

vent production of the A870-08 is 2142 services
www.sxsevents.co.uk

Updating software

The latest MAC 600/E software is available from your Martin dealer and the Martin Professional web site. Be sure to read the upgrade notes included with the software.

Software updates are installed using a Martin MPLS1, MP-2, or a LightJockey 4064 DMX interface card. The procedure is found in the upload device's user manual and, when using the 4064 card, the Martin Software Uploader program's online help file.

Normal upload

The uploader is connected to the fixture just like a controller. Under normal conditions, software can be installed from a remote location - there is no need to set the MAC 600/E to boot mode. Please refer to the uploader manual for instructions.

Boot mode upload

If the data is corrupted during transmission a check-sum error (CSER) will occur and after 15 seconds the fixture will automatically switch over to boot mode (UPLd) and be ready for a boot mode upload.

If a software upload to the MAC 600/E is interrupted, the fixture must be powered off for at least 10 seconds before a new upload can be attempted. When powered on, a check-sum error will occur and it will automatically go into boot mode, ready for a second upload attempt. Select boot mode upload on the upload device.

If there is no functional software in the MAC 600/E memory, the fixture must be set to boot mode manually before starting the upload. If the control panel works, select UPLd from the SPEC menu and confirm when SURE is displayed by pressing [ENTER].

If the control panel does not work, boot mode can be engaged by moving jumper PL121 on the main circuit board to pins 1 and 2 as follows.

1. Remove the printed circuit board as described above. It may not be necessary to unplug the connectors.
2. Position jumper PL121 to boot mode (INIT) as shown above. See also the circuit board layout diagram on page 24.
3. Plug in any unplugged connectors, apply power to the MAC 600/E, and proceed with the upload.
4. After the upload, disconnect the fixture from the electricity, move the jumper back to the normal setting, and replace the circuit board.

www.sxsevents.co.uk

event production and hire specialist 0870 080 2142
www.sxevents.co.uk sales@sxsevents.co.uk

DMX channel						Start code = 0
DMX1	DMX2	DMX3	DMX4	Value	Percent	Function
1						**Shutter, Strobe, Reset, Lamp On/Off**
				0 - 19	0 - 7	Shutter closed
				20 - 49	8 - 19	Shutter open
				50 - 112	20 - 44	Strobe on (fast->slow)
				113 - 115	44 - 45	Shutter closed
				116 - 122	45 - 48	Shutter open, reduced lamp power (MAC 600 E)
				123 - 127	48 - 50	Shutter closed
				128 - 147	50 - 58	Random Strobe Fast
				148 - 167	58 - 65	Random Strobe Medium
				168 - 187	66 - 73	Random Strobe Slow
				188 - 207	74 - 81	Shutter closed
				208 - 217	82 - 85	Reset Fixture
				218 - 227	85 - 89	Shutter closed
				228 - 237	89 - 93	Lamp power on
				238 - 247	93 - 97	Shutter closed
				248 - 255	97 - 100	Lamp power off **Note**: T ≥ 5 seconds
	2					**Intensity**
				0 - 255	0 - 100	0 → 100%
	3					**Cyan**
				0-255	0 - 100	White → Cyan
	4					**Magenta**
				0-255	0 - 100	White → Magenta
	5					**Yellow**
				0-255	0 - 100	White → Yellow
	6					**Color Wheel**
						Scroll
				0 - 40	0 - 16	White → Color 1
				40 - 80	16 - 31	Color 1 → Color 2
				80 - 120	31 - 47	Color 2 → Color 3
				120 - 160	47 - 63	Color 3 → Color 4
						Fixed Colors
				161 - 165	63 - 65	Color 4
				166 - 170	65 - 67	Color 3
				171 - 175	67 - 69	Color 2
				176 - 180	69 - 71	Color 1
				181 - 185	71 - 73	White
						Continuous Rotation
				186 - 214	73 - 84	CW, fast → slow
				215 - 243	84 - 95	CCW, slow → fast
						Random CMY Color
				244 - 247	96 - 97	Random color, fast
				248 - 251	97 - 98	Random color, medium
				252 - 255	99 - 100	Random color, slow
	7					**Beam Shaper 1**
				0	0	Open
				1 - 255	0 - 100	Beam shaper left → right
	8					**Beam Shaper 2**
				0 - 2	0 - 1	Open
				3 - 170	1 - 67	Beam shaper left → right
				171 - 255	67 - 100	Frost
	9					**Pan Coarse (16-bit MSB)**
				0 - 255	0 - 100	Left → right (128 = neutral)
-	10	-	10			**Pan Fine (16-bit LSB)**
				0 - 255	0 - 100	Left → right

www.sxsevents.co.uk

vent product by Phone: 0870 - 08 0 2142
Phone: 0870 - 08 0 2142
Services
www.sxsevents.co.uk
sxsevents@sxsevents.co.uk

DMX Scheme **Start code = 0**

DMX1	DMX2	DMX3	DMX4	Value	Percent	Function
[illegible]	[illegible]	[illegible]	[illegible]	0 - 255	0 - 100	**Tilt Coarse (16-bit MSB)** Up → down (128 = neutral)
-	12	-	12	0 - 255	0 - 100	**Tilt Fine (16-bit LSB)** Up → down
-	-	11	13			**Speed: Pan, Tilt**
				0 - 2	0 - 1	Tracking
				3 - 245	1 - 96	Fast → slow
				246 - 248	96 - 97	Tracking, normal speed (override PTSP FAST)
				249 - 251	98 - 98	Tracking, fast speed (override PTSP NORM)
				252 - 255	99 - 100	Blackout
-	-	12	14			**Speed: Dimmer, CMY, Bm Shaper 1**
				0 - 2	0 - 1	Tracking
				3 - 239	1 - 94	Fast → slow
				240 - 242	94 - 95	Tracking, MOdE = NORM (studio mode off)
				243 - 245	95 - 96	Tracking, MOdE = STUd (studio mode on)
				246 - 248	96 - 97	Tracking, SCUT = OFF (shortcuts off)
				249 - 251	98 - 98	Tracking, SCUT = ON (shortcuts on)
				252 - 255	99 - 100	Fast
						Speed: Color, Beam Shaper 2
				0 - 2	0 - 1	Tracking
				3 - 239	1 - 94	Fast → slow
				240 - 242	94 - 95	Tracking, MOdE = NORM (studio mode off)
				243 - 245	95 - 96	Tracking, MOdE = STUd (studio mode on)
				246 - 248	96 - 97	Tracking, SCUT = OFF (shortcuts off)
				249 - 251	98 - 98	Tracking, SCUT = ON (shortcuts on)
				252 - 255	99 - 100	Blackout

www.sxsevents.co.uk

sx events production hire and sales 0870 080 2142
www.sxevents.com sx@sxevents.co.uk

Display readout	Appears if...	What to do
AUTO (Automatic protocol detection error)	... automatic protocol detection is enabled but the protocol (Martin/DMX) cannot be determined because there is no control data.	• Verify that the controller is sending and the serial link is properly connected.
LERR (Lamp error)	.... the lamp doesn't ignite within 10 minutes of receiving the 'Lamp ON' command. Likely reasons are a missing or defective lamp, or insufficient AC voltage.	• Check the lamp and check that the mains setting of the fixture matches the mains supply.
MERR (Memory error)	...the EEPROM memory cannot be read.	• Contact Martin service personnel for assistance.
CSER (Check-sum error)	...a software upload is not successful	• Upload software again, see page 19.
****	... there is no communication between the control module and motherboard. This readout appears briefly when switching on the fixture.	• Check fuses on motherboard and replace accordingly. • Check that ribbon cable between control module and motherboard is connected properly.
ShER (Short error)	... the fixture detects that the lamp is ON but no 'Lamp ON' command has been received. This can occur if the lamp relays are stuck in the ON position or if the lamp-power feedback circuit has failed. You can still operate the fixture but may not be able to remotely switch off the lamp.	• Contact Martin service personnel for assistance.
HoT (Hot lamp)	... you attempt to strike the lamp within 8 minutes after having switched it off. The fixture will store the 'Lamp ON' instruction and strike the lamp once the 8 minutes have elapsed.	• Wait until the lamp strikes.
bTER (Base temperature error) HTER (Head temperature error)	...there is a malfunction in the base or head temperature sensing circuit.	• Contact Martin service personnel for assistance.
FbEP (Feedback error pan) FbET (Feedback error tilt) FbER (Feedback error pan/tilt)	...pan (FbEp), tilt (FbET) or both (FbER) feedback circuits are malfunctioning. It will still be possible to operate the fixture, though it goes into a "safe" mode where maximum speed is reduced, thus preventing the fixture from losing track of its home position (losing step).	• Contact Martin service personnel for assistance.
PAER (Pan time-out) TIER (Tilt time-out)	...pan and/or tilt indexing circuit is malfunctioning. The fixture will, after the time-out, establish a mechanical stop, and continue to work normally.	• Contact Martin service personnel for assistance.
DIER (Dimmer time-out) CYER (Cyan time-out) MAER (Magenta time-out) YEER (Yellow time-out) COER (Color time-out) b1ER (Beam shaper 1 time-out) b2ER (Beam shaper 2 time-out)	...the magnetic-indexing circuit is malfunctioning (e.g. sensor defective or magnet missing). After the time-out, the effect in question will stop in a random position.	• Contact Martin service personnel for assistance.

www.sxevents.co.uk

vent p... appendix C ...PROBLEM SOLVING ...0870 080 2142
www.sxevents.co.uk ...mail@sxevents.co.uk

Problem	Probable cause(s)	Remedy
One or more of the fixtures is completely dead.	Fixture not powered on.	Check that power is switched on and cables are plugged in.
	Primary fuse blown (located at the mains inlet cable).	Disconnect fixture and replace fuse.
	Secondary fuse(s) blown (located on PCB inside the fixture base).	Disconnect fixture. Check fuses on PCB (F601 and F602) and replace.
Fixtures reset correctly but all respond erratically or not at all to the controller.	The controller is disconnected from the data link.	Connect controller.
	XLR pin-out of the controller does not match pin-out of the first fixture on the link (i.e. signal is reversed).	Install a phase-reversing cable between the controller and the first fixture on the link.
Fixtures reset correctly but some respond erratically or not at all to the controller.	Bad data link connection.	Inspect connections and cables. Correct poor connections. Repair or replace damaged cables.
	Data link not terminated with 120Ω termination plug.	Insert termination plug in output jack of the last fixture on the link.
	Incorrect addressing of the fixtures.	Check fixture address and protocol settings. (page 8)
	One of the fixtures is defective and disturbs data transmission on the link.	Bypass one fixture at a time until normal operation is regained. Do this by unplugging the XLR in and out connectors and connecting them directly together. Have the fixture serviced by a qualified technician.
	XLR pin-out on fixtures does not match (pins 2 and 3 reversed).	Install a phase-reversing cable between the fixtures or swap pins 2 and 3 in the fixture that behaves erratically.
Lamp fails to strike. (“LERR” displayed in MAC 600.)	The ballast and transformer settings do not match local AC voltage and frequency.	Disconnect fixture. Check ballast and transformer settings and correct if necessary.
	Lamp blown.	Disconnect fixture and replace lamp.
	Lamp not installed.	Disconnect fixture and install lamp.
	Lamp too hot.	Allow to cool. Execute lamp-off, then lamp-on.
Lamp cuts out intermittently.	Fixture is too hot.	Allow fixture to cool. Reduce ambient room temperature. Set fan speed to full. Recalibrate temperature sensors.
	The ballast and transformer settings do not match local AC voltage and frequency.	Disconnect fixture. Check ballast and transformer settings and correct if necessary.
Low light output	Lamp near end of life.	Replace lamp.
	The ballast and transformer settings do not match local AC voltage and frequency.	Disconnect fixture. Check ballast and transformer settings and correct if necessary.
	(MAC 600 E) Incorrect ballast type selected.	Check S/N and set ballast type personality accordingly.
	Misaligned lamp.	Adjust lamp.

www.sxevents.co.uk

vent productions and Audio-Visual Services
PPB LAYOUT Phone: 0870 080 2342
www.sxsevents.co.uk
www.sxsevents.co.uk

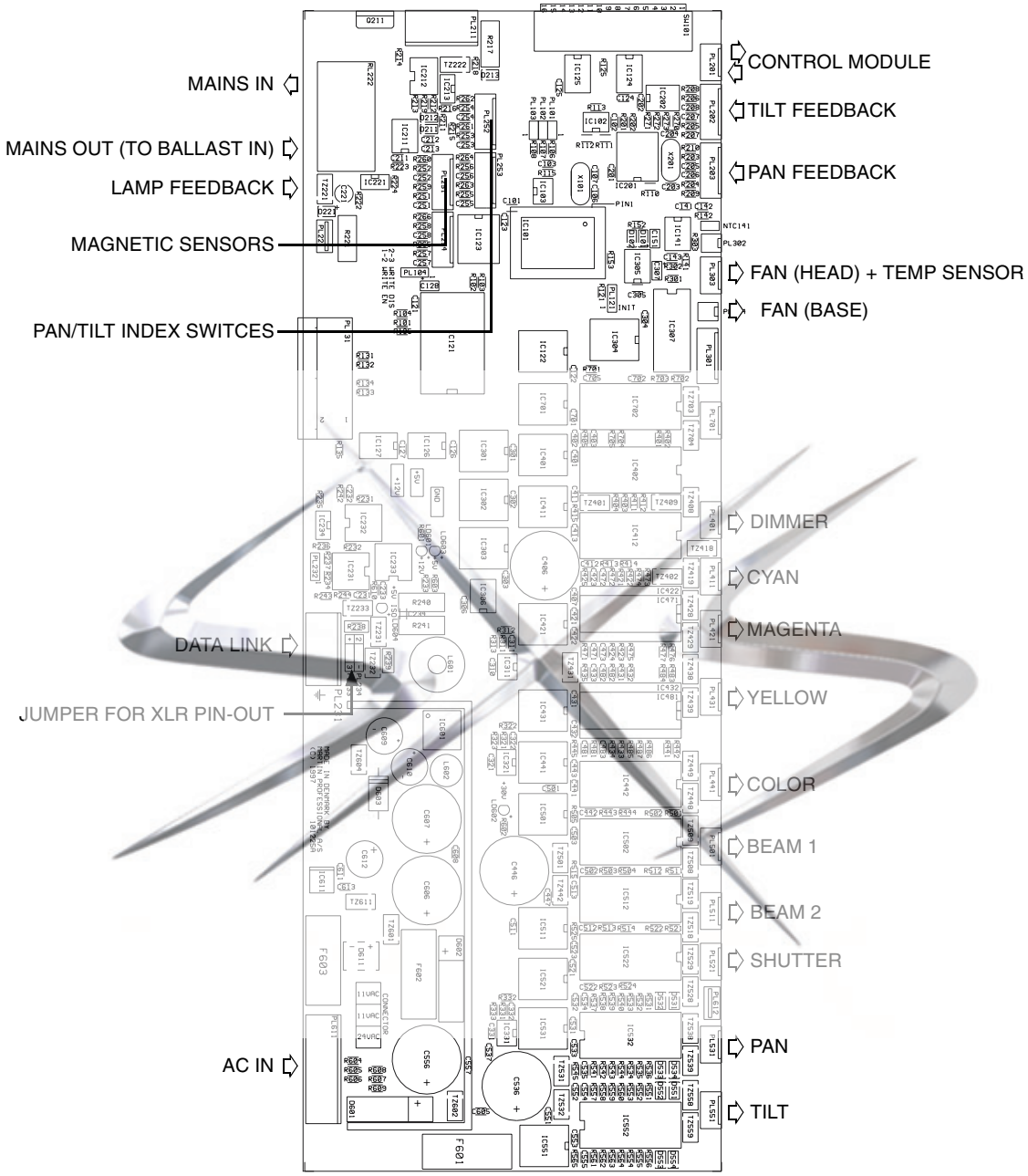

www.sxsevents.co.uk

vent production hire 0870 180 2142 Audio Visual Services
www.sxeventhire.co.uk sx@sxevents.co.uk

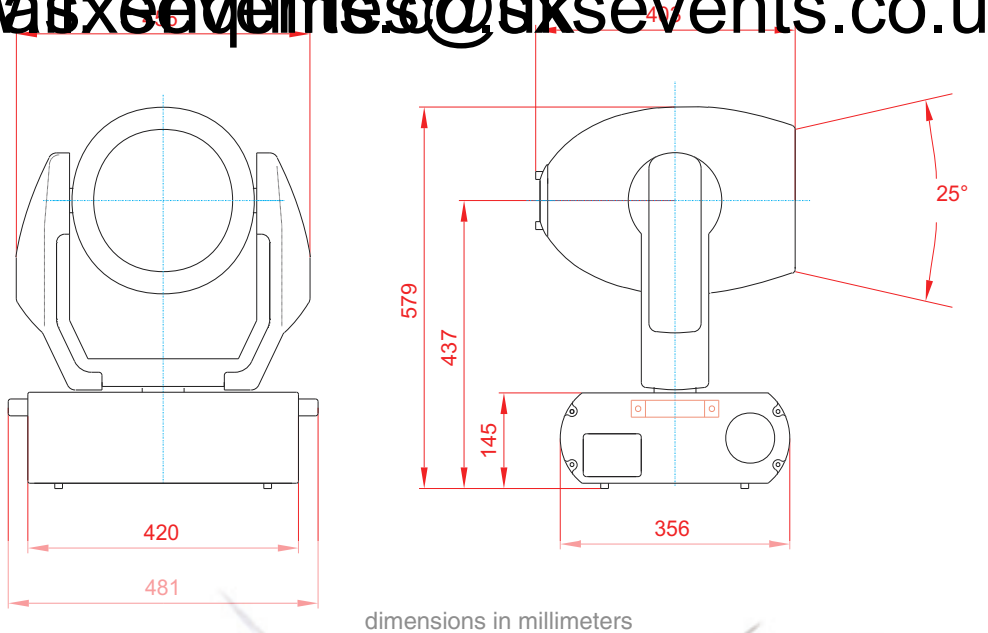

dimensions in millimeters

Measurements

- Dimensions (LxWxH) without clamps ..... 481 x 456 x 610 mm (18.9 x 17.9 x 24 in)
- Minimum rigging distance, center to center ..... 457 mm (18 in)
- Weight, without clamps, MAC 600 ..... 31.5 kg (69.3 lb)
- Weight, without clamps, MAC 600 E ..... 25.4 kg (55.9 lb)

Electrical, magnetic ballast version

- Ballast taps ..... 200/230/245 V, 50 Hz; 208/27 V, 60 Hz
- Power and current ..... 750W, 3.9A @ 230V/50Hz; 750W, 4.2A @ 208V/60Hz
- Power factor (PF) 0.85

Electrical, electronic ballast version

- Transformer taps ..... 100/110/120/200/210/220/230/240 @ 50 - 60 Hz
- Power and current ..... 690 W, 3.2 A @ 230 V / 50 Hz
- Power factor (PF) 0.94

Fuses

- Primary fuse, MAC 600, MAC 600 E @ 200 - 250 V AC ..... T 6.3 A, 250 V
- Primary fuse, MAC 600 E @ 100 - 130 V AC ..... T 10.0 A, 250 V
- Fuse F601 ..... T 5.0 A, 250 V
- Fuse F602 ..... T 4.0 A, 250 V
- Fuse F603 ..... T 0.315 A, 250 V

Communication

- Protocols ..... USITT DMX512 (1990) / Martin RS-485
- DMX start code 0
- Recommended cable ..... 24 AWG (min.), low capacitance, 85-150 Ω shielded twisted pair
- Connector type ..... 3-pin XLR male/female (pin 1 = screen)

Compatible lamps

- Osram HSR-575/2 ..... 575 W, 85 lm/W, 1000 h avg. life, 6000K, P/N 97010200
- Osram HSD-575 ..... 575 W, 78 lm/W, 3000 h avg. life, 7200K, P/N 97010207
- Philips MSR-575/2 ..... 575 W, 85 lm/W, 1000 h avg. life, 7200K, P/N 97010201
- Philips MSD-575 ..... 575 W, 75 lm/W, 2000 h avg. life, 6000K, P/N 97010202

www.sxsevents.co.uk

vent products Phone: 0870 080 2842 Services
www.sxsevents.co.uk

Photometric:

- Total integrated luminous flux ..... 21,500 lm
- Center intensity w/ standard 25° lens hood ..... 291,000 candela
- Center intensity w/ optional 40° long lens hood ..... 722,000 candela
- Center intensity w/ optional 65° diffuser ..... 34,500 candela

Thermal

- Maximum ambient temperature ..... 40° C (104° F)
- Maximum surface temperature under normal conditions ..... 140° C (284° F)

Accessories

- 2 unit flight case 91510002
- 18° “long front” with lens 91610005
- 65° floodlight diffuser on standard front 91610008
- 90 x 90 mm color/diffuser filter holder kit 91611001
- Termination plug, 3-pin XLR male, 120 Ohm 91613017
- G-clamp 91602003
- Half-coupler clamp 91602005
- Clamp adaptor with 1/4-turn fasteners 91602001
- Outdoor Protection Dome 90525010
- MP2 Uploader: 90758420
- 4 Channel Opto-Isolated RS-485 Splitter/Amplifier 90758060

www.sxsevents.co.uk

vent productiPhone: 0870 080 2342
www.sxsevents.co.uk
mail: enquiries@sxsevents.co.uk

Sound and Audio-visual Services

vent productions Ltd 0870 080 2842 Services
www.sxeventservices.co.uk

Phone/fax 0870 080 2842
email sx@sxevents.co.uk

Start code = 0

Implemented from CPU software version 2.0

MAC 600 DMX Protocol

| CODE | | |