Thank you for choosing NIVELCO instrument.
We are sure that you will be satisfied throughout its use!

NIVOTRACK
M-300 series
MAGNETOSTRICTIVE TRANSMITTER

USER'S MANUAL

Manufacturer:
NIVELCO Process Control Co.
1043 Budapest, Dugonics u. 11.
Telephone: 369-7575 ♦ Fax: 369-8585
e-mail: sales@nivelco.com http://www.nivelco.com

1. APPLICATION

NIVOTRACK magnetostrictive level transmitters are two-wire multifunction, float-type level gauges. They can be used for high accuracy level metering of clean liquids in normal or explosion hazardous environment. Levels of two liquids with different density and their level difference can also be measured with the double float version. Units are available with rigid and with flexible probe. Flexible tube version can mainly be used in large tanks since its transport and installation is much simpler than their counterparts with the same length. Intelligent electronics enable calculation of volume Units require a minimum of maintenance, as the only moving part is the float. The output signal is 4 … 20 mA. HART compatible version is also available.

2. TECHNICAL DATA

Types	M□A ... M□C, M□D ... M□G	M□K ... , M□N ...	MEU ..., MGU ...
Process values measured	Level, two levels, level difference		
Probe version	Rigid tube	Flexible tube	Plastic coated rigid tube
Probe length	0.5 m … 4,5 m	2 m … 10 m	0.5 m … 3 m
Tube material	Stainless steel: 1.4571 (DIN)		+ PFA coating
Maximum pressure	2.5 MPa (25 bar)	1.6 MPa (16 bar)	0.3 MPa (3 bar)
Process temperature (*)	-40 … +130 °C		
Non-linearity	± 1 mm		
Resolution	1 or 5 mm		
Temperature coefficient	0,04 mm/°C		
Operating range	Maximum range: see under Dimensions Minimum range : 200 mm		
Zero span	Anywhere within the range		
Size/material of the float	∅ 52x52 cylinder or ∅ 95 mm ball(**) St.St.		∅ 76 x 87 mm / cylind. PVDF
Density	min. 0.8 g/cm³ min. 0.5 g/cm³ with float ∅ 95 mm		
Materials of the wetted parts	Stainless steel: 1.4571		PFA + PVDF
Ambient temperature(*)	-25ºC … +70ºC		
Output signal for any process values	4…20 mA (limit values:3.9…20.5 mA) reverse programming also possible Terminal resistance for HART interface ≥ 250 Ohm		
Damping	10 s, 30 s and 60 s and 0 … 60 s adjustable		
Fault indication by the output	3.8 mA or 22 mA		
Output load	R_s= (Us-12 V) / 0.02 A U_s = power supply voltage		
Display unit (SAP-201)	6 digits, 7mm size LCD, engineering units, bargraph Any measured process value can be displayed		
Power supply	12 … 36 V DC		
Explosion proof protection mark	Ex II1/2G EEx ia IIB T6 IP 67 (0,5…5 m) Ex II1/2G EEx ia IIA T6 IP 67 (5…10 m)		
Ex power supply	U_{max} = 30 V I_{max} = 80 mA P_{max} = 0.8 W C_i < 30 nF L_i < 200 μH		
Electrical protection	protection class III		
Ingress protection	IP 67		
Process connection	According to the order codes		
Electric connection	Cable gland Pg 16 or M 20 x 1,5 Cable: ∅ 8 … 15 mm ; Screw terminals for wires with 1,5 mm²		
Housing of electronics	Paint coated aluminium alloy or plastic (VALOX 412)		
Mass	1.7 kg + tube: 0.6 kg/m	2.9 kg + tube: 0.3 kg/m	1.7 kg + tube: 0.7 kg/m

** *for a pressure of max 1,6 MPA (16 bar) only*

2.1 ACCESSORIES

- User's Manual
- Warranty sheet
- Declaration of Conformity
- Programming manual (for transmitters with display module only)
- 2 pcs cable gland
- 1 pc gasket for process connection with BSP thread only (klingerit,oilit)

- 1 pc weight
- 1 pc M10 nut
- 1 pc M10 spring washer
- 1 pc M10 washer
- 1 pc Spacer (for ∅ 52 float only)

for M□K and M□N types only

*TEMPERATURE DERATING DIAGRAM

* *In case of process temperature exceeding +70 °C, limits of the ambient temperature are in accordance with the diagram.*

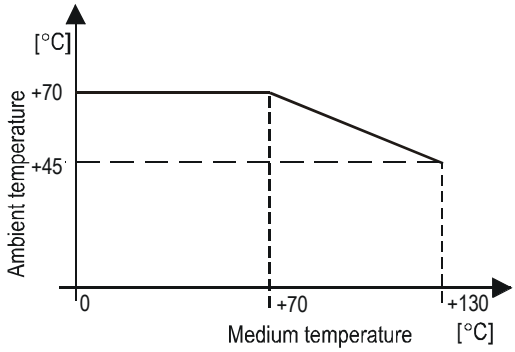

2.2 ORDER CODE (NOT ALL COMBINATIONS ARE POSSIBLE)

NIVOTRACK M ☐ ☐ - ☐ ☐ ☐ - ☐

TYPE	CODE
Transmitter	T
Transmitter + display	B
Transmitter plastic coated tube	E
Tx, plastic coated tube + display	G

TUBE / PROCESS CONNECTION	CODE
Rigid 1" BSP	A
Rigid 2" BSP	C
Rigid 1" NPT	D
Rigid 2" NPT	G
No process conn.	U
Flexible / 2" BSP	K
Flexible / 2" NPT	N

HOUSING	CODE
Aluminium	3
Plastic	4

CODE	ORDERING LENGTH		CODE
0	0 m	0 m	0
1	1 m	0,1 m	1
2	2 m	0,2 m	2
3	3 m	0,3 m	3
4	4 m	0,1 m	4
5	5 m	0,5 m	5
6	6 m	0,6 m	6
7	7 m	0,7 m	7
8	8 m	0,8 m	8
9	9 m	0,9 m	9
A	10 m		

OUTPUT / NUMBER OF FLOAT / EX	CODE
4 … 20 mA / one float / Ordinary	2
4 ... 20 mA, HART / one float / Ordinary	4
4 ... 20 mA / one float / EEx ia	6
4 ... 20 mA, HART / one float / EEx ia	8
4 ... 20 mA / one float / EEx ia + EEx d	J
4 ... 20 mA, HART / one float / EEx ia + EEx d	K
4 … 20 mA / one float / 5 mm res / Ordinary	A
4 … 20 mA / two floats / Ordinary	B
4 … 20 mA, HART / two floats / Ordinary	C
4 … 20 mA / one float / 5 mm res / EEx ia	E
4 … 20 mA / two floats / EEx ia	F
4 … 20 mA, HART / two floats / EEx ia	G
4 … 20 mA / two floats / EEx ia + EEx d	L
4 … 20 mA, HART / two floats / EEx ia + EEx d	M

● Order length above 5 m Ex II1G EEx i_a IIA T6 only

ACCESSORIES ON REQUEST

FLANGE: M F T - ☐ ☐ ☐ - ☐

STANDARD / MATERIAL	CODE
DIN / steel	1
DIN / 1.4571	2
DIN / PP	3
DIN / steel + PTFE	4
ANSI / steel	5
ANSI / 1.4571	6
ANSI / PP	7
ANSI / A38 + PTFE	8

SIZE DIN ANSI	Code
DN 65 2½"	1
DN 80 3"	2
DN 100 4"	3
DN 125 5"	4
DN 150 6"	5
DN 200 8"	6

PRESSURE	Code
PN 16 / 150 psi	1
PN 25 / 300 psi	2

THREAD (IN THE MIDDLE)	CODE
Pg16 or M20x1,5	1
1" BSP	2
2" BSP	3
1" NPT	5
2" NPT	6

SLIDING SLEEVES FOR THE UNITS WITHOUT PROCESS CONNECTION

TYPE	CONNECTION	S (mm)	H (mm)	L (mm)	B (mm)
MBH-105-2M-300-00	1" BSP	41	36	20	
MBK-105-2M-300-00	2" BSP	70	43	24	
MBL-105-2M-300-00	1" NPT	41	38		~10
MBN-105-2M-300-00	2" NPT	70	43		~11

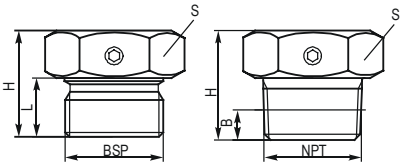

2.3 DIMENSIONS

RIGID TUBE TRANSMITTER AND THREADED PROCESS CONNECTION TYPE: M☐A … M☐C, M☐D … M☐G	*FLEXIBLE TUBE TRANSMITTER WITH SLIDING SLEEVE* TYPE: M☐K… M☐N…	*PLASTIC COATED RIGID TUBE TRANSMITTER* TYPE: MEU… MGU…

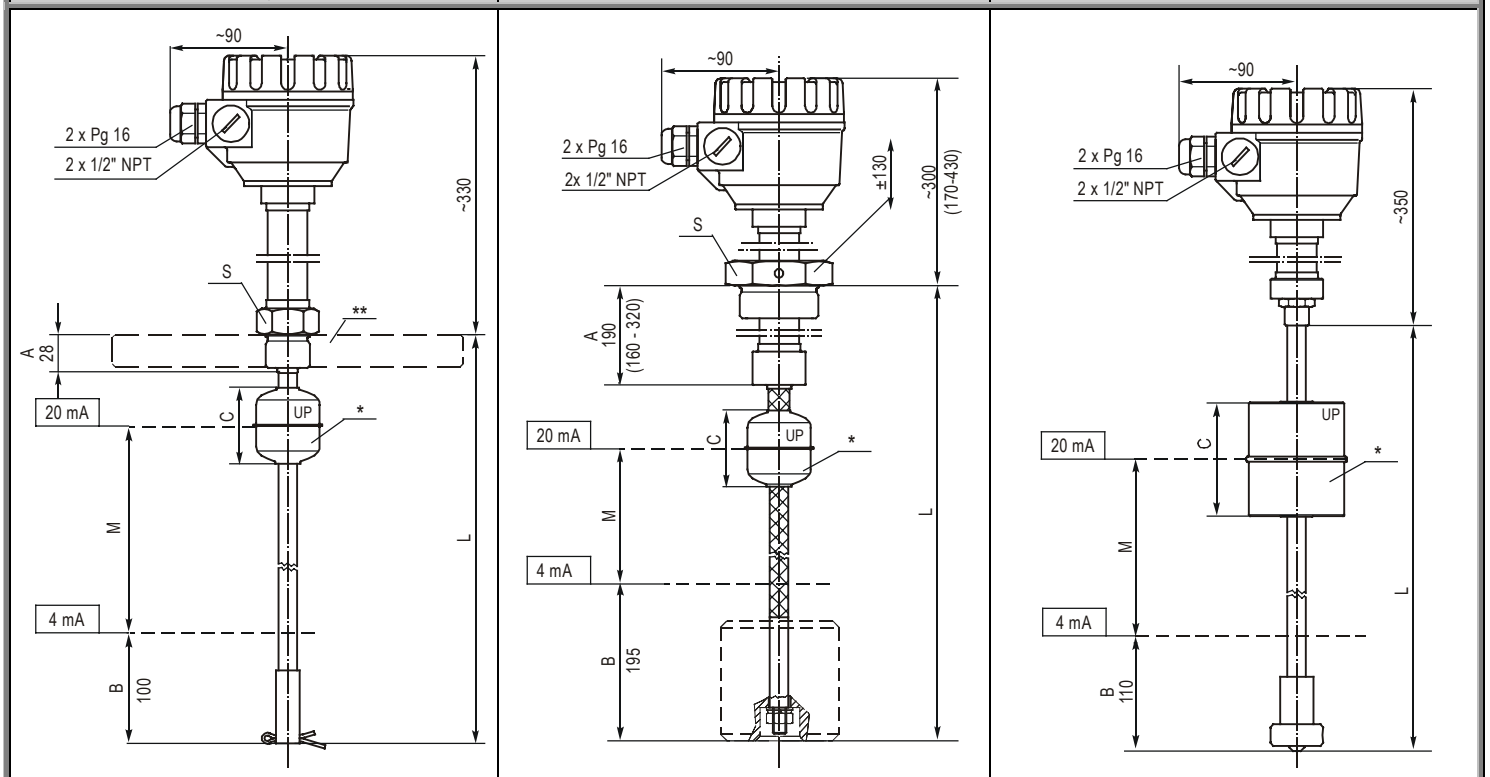

M_{max} = L - B - A – C/2	M_{max} = L - B - A –C/2 A = 190 mm	M_{max} = L - B – C/2

L *= Order length* ***M*** *= Measurement range* ***B*** *= No measurement zone* ***A*** *= No measurement zone* ***C*** *= Height of the float* ** Float size see in the Technical Data* *** Flange on request*

3. INSTALLATION

- The unit should be located in an area, which allows easy access for service, calibration and monitoring.
- Waving, turbulence and heavy vibration affects accuracy of the measurement. Thus the unit has to be installed far away from devices or places causing such disturbance for instance from openings for filling or emptying. These affects can be attenuated in applications with rigid tube probes by the use of stilling pipe along the whole probe.
- To ensure consistent and durable operation the process fluid should be free of suspended solids or materials, which could stick between the float and the guide tube.
- **The unit should be protected against direct heat radiation.**
- Design dimensions of the unit and the tank as well as calculations should be checked before mounting.
- Before installation a preliminary operational check is suggested.
- The unit is offered with a wide variety of process connections according to the order codes Tank opening exceeding the float diameter is recommended for insertion. Should this not be possible the float has to be removed from the (rigid or flexible) guide inserted through the opening and the float must be reattached from inside of the vessel. The word "UP" etched on the float is to ensure mounting the float in correct position.
- Insertion position of the MEU and MGU types can be adjusted. Free length over the tank however must not be longer than 200 mm.
- **Units with flexible tube of type M□K … M□N are provided with weight for straightening of the tube and keeping it in position.**
- **When lowering down the flexible tube (with the weight at his end) to the bottom of the tank, special care has to be taken to avoid interlocking or twisting and the coil diameter must not be smaller than 60 cm.**
  Dropping or twitching may damage the unit. Float or floats should be placed next to the weight to avoid its hitting against the weight.
- **When the weight reaches the bottom the unit should gently be lifted thus spanning the flexible tube. Once feeling resistance of the weight (about 120 … 150 N depending on the length of the cable) but not lifting the weight from the bottom the unit should be fastened by the sliding sleeve. Proper spanning can be checked by the analogue signal or on the display. If the float is at the lowest point I_{out} < 4 mA or display should read < 0 mm**

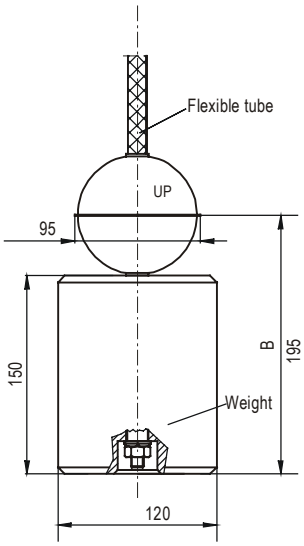

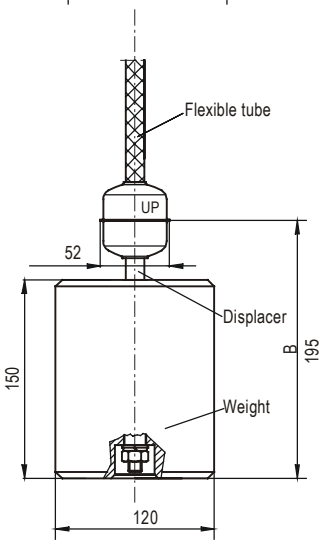

Attention!

In order to avoid damaging the probe do not put it to torsion when installing or removing the unit. Therefore, special care has to be taken when the process connection is being screwed into or out of the flange. The best is to hold the rigid part of the probe with a suitable tool as long as the process connection is tightened to its place Sliding sleeve must not be loosened during operation.

4. WIRING

This transmitter is designed to operate on 12 … 36 V DC power only. The maximum loop resistance (including barrier resistance) is depending on the voltage of the power supply and can be between 0 and 1200 Ohm. Calculation formula can be seen in the Technical Table under Output Load. Using transmitter with HART a terminal resistance with a minimum value of 250 Ohm should be applied.
The power supply should be interconnected with the unit with twisted, shielded cable that can be pulled through the cable conduit. The cable can be connected to the terminal strip after removing the cover and the display unit.
CAUTION: the enclosure of the transmitter should be grounded. Grounding resistance < 1 ohm. If the enclosure can not be grounded the negative line of the loop has to be grounded.

The unit may be damaged by electrostatic discharge (EDS), via its terminal thus used commonly precautions should be applied to avoid electrostatic discharge e.g. touching a properly grounded point before removing the cover of the enclosure.

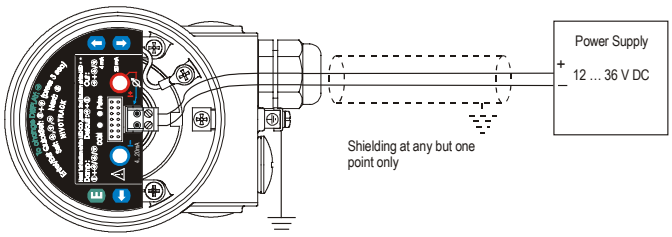

Wiring

5. SET UP, ADJUSTMENT AND PROGRAMMING

5.1 SET UP

After power up the unit is fully operational, which will be indicated by lighting of the "VALID" LED. HART If the is going on the „COM LED is also on.
Value of the current output signal can be measured on the current test point with voltmeter. If the analogue output is 4 mA or 20 mA voltage meter has to show 4 mV or 20 mV respectively. (Can not be used for calibration purposes.)
Fault will be indicated by blinking of the „VALID" LED and by change of the output signal in the following events:

- Electronic fault;
- Range setting too narrow (< 200 mm)
- Broken magnet in the float.

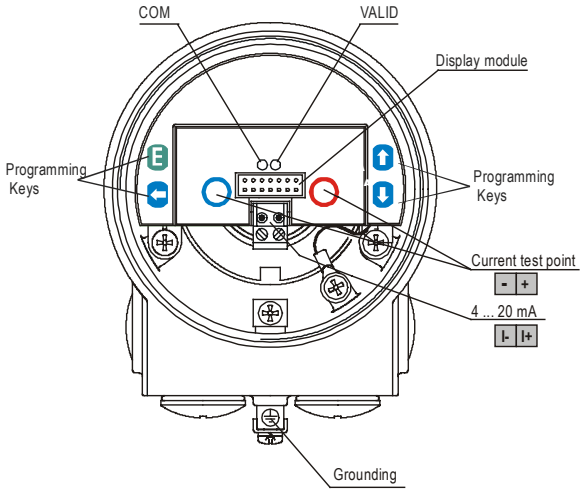

Transmitter with removed cover

5.2 ADJUSTMENT

Transmitter can be adjusted to the actual process technology by programming the parameters. Factory Setting is as below:

- Measurement mode: level
- Current output (4 … 20 mA) assigned to the end values of the maximum range
- Fault indication on the current output: :I_{Out} = 22 mA
- Damping: 10 s
- Engineering units: mm, %,

5.3 Programming

Programming without SAP-201 display module: assignment of the 4 and 20 mA to the levels, the fault indication and damping can be modified. This method is recommended for simple applications.
Procedure of the programming: pressing keys in relevant sequence and watching state of the LED „VALID" and „COM". Interpretation of the LED state:

○ = LED off ●= LED on

Assignment of level to 4 mA

Action	LED state following the action
1) Press key ◄ continuously	○○
2) Press additionally key ▲ continuously	●●
3) Release keys	○○ Programming completed

Assignment of level to 20 mA

Action	LED state following the action
1) Press key ◄ continuously	○○
2) Press additionally key ▼ continuously	●●
3) Release keys	○○ Programming completed

Programming "Fault indication" on the current output
As a result of programming the output current will be 3,8 mA; 22 mA, or will hold last value for the time the fault lasts.

Action	LED state following the action
1) Press key ▲ continuously	○○
2) Press additionally one of the keys E for 3,8 mA ◄ for 22 mA continuously	●●
3) Release keys	○○ = Programming completed

Programming damping

Action	LED state following the action
1) Press key E continuously	○○
2) Press additionally one of the keys ◄ for 10 sec, ▲ for 30 sec, ▼ for 60 sec continuously	●●
3) Release keys	○○ Programming completed

Reset (returning to Factory Setting)

Action	LED state following the action
1) Press key ◄ continuously	○○
2) Press additionally key E continuously	●● Reset
3) Release keys	○○ Programming completed

After programming completed, LEDs come to the measurement mode.

Programming with SAP-201 display module will be aided by displaying parameters and it can be performed by the following two ways.

Quickset: recommended for simple applications for assignment of two levels to 4 and 20 mA output, for selection of fault indication and damping.

Programming keys	Function
E+▼ (press for min. 3 s)	Enter/quit QUICKSET programming mode
▲, ▼, ◄	Adjusting value (increase, decrease, shift blinking)
▲ + ▼	"GET VALUE" - function for measuring prevailing level
E	Save displayed value proceeding to the next screen
◄ + ▲	Reload value previous (CANCEL modification)
◄ + ▼	Display Manufacturer's Setting.

4:xxxx	**Level xxxx** to be **assigned to 4 mA** current output. **Manual adjustment:** select with keys ▲ / ▼ / ◄ level value to be assigned to 4 mA and save by pressing E **Automatic adjustment:** set up tank level to be assigned to 4 mA current output. Measure level with "GET LEVEL" function (▲ + ▼) and press E to save.
20:xxxx	**Level xxxx** to be **assigned to 20 mA** current output. **Manual adjustment:** select with keys ▲ / ▼ / ◄ level value to be assigned to 20 mA and save by pressing E **Automatic adjustment:** set up tank level to be assigned to 20 mA current output. Measure level with "GET LEVEL" function (▲ + ▼) and press E to save.
Er:xxxx	**"Fault indication" on the current output** Press ▲ or ▼ for error indication by 3,8 mA or by 22 mA respectively
dt: xxxx	**Damping** – Use keys ▲ / ▼ for setting 10 s, 30 s or 60 s and save with pressing E.

Full programming: highest level of programming with access to all parameters for setting the following:

- Measurement configuration
- Assignment of 4 mA and 20 mA to levels
- Measurement optimalisation
- Entering tank dimensions for volumetric calculation
- Linearisation

Detailed description see in the separate „Programming of NIVOTRACK M-300"

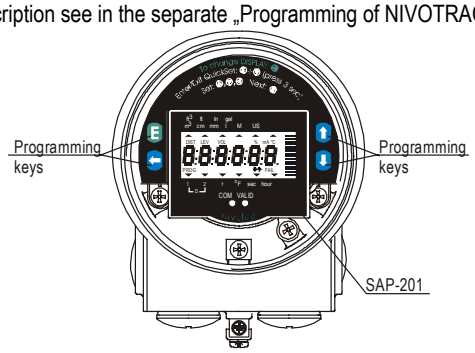

Transmitter with SAP-201 display module

5.4 Conditions of Ex application

Probe length in connection with gas grouping:

Gas group	IIB	IIA
Probe length	0,5 … 5 m	3 … 10 m

Table of temperature groups

Type	Temperature Class	Ambient Temperature	Process Temperature
M□A…, M□C… M□D…, M□G…	T6	-25 °C … +70 °C	-40 °C … +80 °C
M□K…, M□N…			-20 °C … +70°C
MEU…, MGU…			-20 °C … +80 °C
M□A…, M□C… M□D…, M□G…	T5	-25 °C … +59 °C according to the derating diagram	-40 °C … +95 °C
MEU…, MGU…			-20 °C … +95 °C
M□A…, M□C… M□D…, M□G…	T4	-25 °C … +45 °C according to the derating diagram	-40 °C … +130 °C
MEU…, MGU…			-20 °C … +130 °C

- Transmitter should only be powered by power supply in conformity with the technical data under Point 2 and duly certified for EEx ia IIB or EEx ia IIA.
- Enclosure of the housing should be grounded.
- Units with plastic coated tube (types MEU and MGU) may be electrostatically loaded therefore:

– medium to be measured must be electrically conductive, and with specific resistance not exceeding the value of 10^4 Ωm even on the most unfavourable places and under the most unfavourable conditions.
– speed as well as way of filling and emptying should be chosen according to the medium.

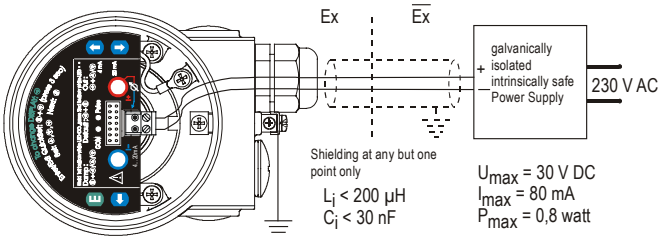

Wiring of the Ex version

6. MAINTENANCE AND REPAIR

The unit does not require routine maintenance, however the probe may need occasional cleaning to remove surface deposits. Repairs will be performed at Manufacturer's premises. Units returned for repair should be cleaned or disinfected by the customer.

7. STORAGE CONDITIONS

Ambient temperature: -25 °C ... +60 °C
Relative humidity: max. 98%

8. WARRANTY

All NIVELCO products are warranted to be free from defects according to the Warranty Sheet, within two (2) years from the date of purchase.

Aug 2003
Technical specification may be changed without notice.