SMART AVIONICS

SmartASS Air Speed Speaker Installation and User Manual

$Revision: 1.3 $

Copyright 2005-2006 Smart Avionics Limited.

All rights reserved.

Smart Avionics Limited reserves the right to change or improve its products at any time without obligation to upgrade or modify existing products.

Unless indicated otherwise, the contents of this document apply to any revision of the product's software.

Document Revision History

Revision	Date	Author	Remarks
1.3	January 2006	MB	Improved diagrams
1.2	October 2005	MB	Various additions in installation section
1.1	September 2005	MB	Initial version

Contents

1 Introduction **1**

1.1 Why speak speed? 1

1.2 Overview of installation 2

1.3 Specifications 4

2 Installing the SmartASS **7**

2.1 Setting the configuration jumpers 7

2.2 Mounting the enclosure 9

2.3 Mounting the control panel 9

2.4 Pitot and static connections 11

2.5 Electrical connections 11

2.6 Installation approval 13

3 Using the SmartASS **15**

3.1 The operating modes 15

3.2 The controls 16

3.3 Zeroing the SmartASS 18

A Voice Customisation **19**

A.1 The sound files 19

A.2 Copying the files the MMC card 21

List of Figures

1.1 Enclosure 3
1.2 Control Panel 3

2.1 Configuration Jumpers 8
2.2 Connections 13

List of Tables

1.1 Specifications 4
1.2 D-type connector wiring 5

A.1 Sound files 20

Chapter 1

Introduction

This manual describes how to install and use the Smart Avionics Air Speed Speaker (hereafter referred to as the 'SmartASS').

Please read all of this manual before installing and using the SmartASS. If you have any questions, please send email to support@smartavionics.com.

1.1 Why speak speed?

The SmartASS has been developed to provide the pilot of a home-built/experimental aircraft with a means of accurately determining their airspeed without having to look at the airspeed indicator. It does this by 'speaking the speed' in either knots, MPH or KPH through the intercom/radio system and hence into the pilot's headset.

It can be used during any phase of flight but it has been specifically developed for use during the approach phase when both airspeed and flight path need to be accurately controlled.

During the approach to a short field or if the conditions are challenging, both speed and flight path are critical. The SmartASS is helpful because:

1. It reduces the amount of time the pilot has to be looking inside the cockpit so more attention can be paid to getting the flight path right.

2. It supplies the pilot with airspeed information in a form that is easier to assimilate than by looking at an ASI.

3. It warns the pilot when the speed has deviated significantly from a nominated 'target speed'.

This last capability (referred to as 'speed director' mode) really sets the SmartASS apart from a conventional ASI. In speed director mode, instead of simply reporting the current airspeed, the SmartASS will actively monitor the airspeed, compare it to the target airspeed and then report deviations from the target speed. The more the airspeed deviates from the target speed, the more the SmartASS will talk.

Using the SmartASS, once the aircraft has been configured for final approach and the checks have been carried out, the pilot can concentrate on eyeballing the approach without having to visually check the airspeed every few seconds.

Important

Although the SmartASS is accurate and reliable it must not be the only means of determining airspeed installed in the aircraft. A conventional mechanical ASI must also be installed.

1.2 Overview of installation

Chapter 2 (*Installing the SmartASS*) covers the installation of the SmartASS in detail, here we just give an overview.

The SmartASS electronics are contained in a lightweight aluminium enclosure (Figure 1.1 on the facing page) that may be mounted in any convenient position within the instrument panel. The enclosure is equiped with two air connectors for plumbing the unit into the aircraft's pitot and static lines.

The SmartASS's electrical connections are via a D-type connector. A wiring harness is provided that connects to a small control panel (Figure 1.2 on the next page) on to which is mounted a combined volume control + on/off switch and a push button that selects the mode of operation (talking ASI or speed director). This panel should be mounted in any suitable location such that it can be easily accessed while flying. The wiring harness also provides the connections to the aircraft's power supply and the audio system that will deliver the audio to the pilot's headset.

Figure 1.1: Enclosure

Figure 1.2: Control Panel

1.3 Specifications

All temperature specifications refer to the temperature of the SmartASS enclosure, not the outside air temperature.

Table 1.1: Specifications

Operating Temperature Range	-40°C - 85°C	
Minimum Speed	25 Knots / 30 MPH / 50 KPH	Silent below this speed
Maximum Speed	250 Knots / 287 MPH / 462 KPH	Not an absolute limit
Absolute Accuracy (linearity & offset)	±2%	In the temperature range 0°C - 85°C. Assumes unit has been recently zeroed
Repeatability (pressure hysteresis)	±0.1%	At 25°C. For speeds between 25 and 250 Knots
Supply Voltage	6-18V	Reverse polarity protected
Supply Current	30 mA (50 mA when speaking)	
Audio Output Voltage	1 Volt Peak	With 200 Ohm load
Minimum Load Impedance	50 Ohms	
Electrical Connector	9W Female D-Type	
Air Connectors	6 mm OD push-fit	1/8 BSP fittings available on request
Enclosure Dimensions	150 x 120 x 40 mm	Includes mounting tabs and connectors
Weight	310 grams	Enclosure 230, panel/harness 80

The SmartASS is supplied with a pre-wired D-type connector so you should not need to wire your own. In case you do want to wire your own connector, Table 1.2 on the facing page lists the connections.

Table 1.2: D-type connector wiring

1	Ground	Connect to radio/intercom ground
2	Audio out	To radio/intercom audio input
3	Volume A	Connect 10K log pot between Volume A & B
4	RS485 A	Do not connect
5	+12V Supply	A small fuse is needed to protect the wiring
6	Ground	Internally connected to pin 1
7	Mode Switch	Connect normally open switch to ground
8	Volume B	Connect 10K log pot between Volume A & B
9	RS485 B	Do not connect

Chapter 2

Installing the SmartASS

Installation of the SmartASS consists of the following steps:

1. Setting the configuration jumpers (if necessary).
2. Mounting the enclosure within the instrument panel.
3. Mounting the control panel on the instrument panel.
4. Connecting the pitot and static connections.
5. Connecting the power supply and audio output wires.

2.1 Setting the configuration jumpers

The default behaviour of the SmartASS can be modified by installing configuration jumpers[1] (supplied) on the circuit board. To gain access to the board remove the four M4 screws and the top cover.

Figure 2.1 on the next page shows the layout of the jumpers. `J1` (speed units selection) is near the back edge of the PCB.

[1] A jumper is a small link that connects two Printed Circuit Board pins together. The jumpers supplied with the SmartASS have a red plastic insulating outer.

Figure 2.1: Configuration Jumpers

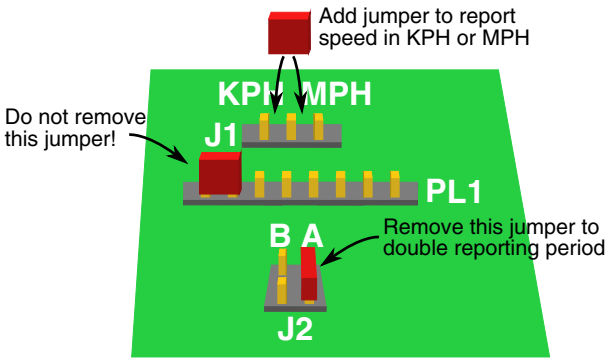

Configuring the speed units

By default, the SmartASS reports the airspeed in Knots. If desired, the airspeed can be reported in either MPH or KPH by installing the appropriate jumper as follows: at the very back of the circuit board (away from the connectors) you will find 3 pins labeled `J1` and also `KPH` and `MPH`. Install a jumper between either the first and second pin or between the second and third pins depending on whether you want the airspeed units to be KPH or MPH.

Configuring the repeat period

As supplied, the SmartASS waits 2.5 seconds between speaking each speed in talking ASI mode. By removing the jumper that is installed in `J2` position `A` (the right hand pair of pins), the repeat period can be doubled to 5 seconds.

Important

The circuit board contains components that may be damaged by static electricity. Try to avoid touching the components on the board and, if possible, remove any static charge that you may be carrying by touching something that is earthed before handling the unit.

Make sure you do not remove the existing jumper that is positioned on the left hand side of a row of 8 pins towards the back of the circuit board. That jumper is required at all times.

After the jumpers have been configured, replace the cover and screws.

2.2 Mounting the enclosure

The enclosure can be mounted in any convenient position within the instrument panel area. Four M5 mounting holes are provided. Remember to leave adequate space for the D-type conector and the wiring harness (a minimum of 65 mm should be allowed). The length of the wires between the enclosure and the control panel is 1 metre.

The enclosure can be mounted in any orientation. Although the SmartASS is robust, avoid subjecting it to excessive vibration or extremes of temperature.

2.3 Mounting the control panel

The control panel holds the combined on/off switch + volume control and the mode button. It should be mounted in a position such that the mode button can easily be operated while flying. How exactly this panel is mounted depends on the thickness of the surrounding instrument panel.

If the instrument panel is no more than 4mm thick, the SmartASS control panel can simply be mounted by drilling two holes (one for the potentiometer and the other for the push switch) and then mounting those controls through the instrument panel. The SmartASS control panel will be held in place by the nuts that fasten the controls to the instrument panel.

The hole required for the potentiometer is 9.5mm diameter and the hole for the mode switch is 6.5mm diameter. The distance between the hole centres is 23mm.

If the instrument panel is more than 4mm thick, several alternatives are possible:

1. Mount the SmartASS control panel on a sub-panel which is not more than 4mm thick (as described above) and then mount the sub-panel somewhere.

2. If it is possible to locally reduce the thickness of the instrument panel to 4mm or less by removing material behind where the SmartASS panel is to be located, then that would allow the controls to be mounted as described above.

3. The instrument panel could be cut away sufficiently to allow the bodies of the controls to pass through it. The control panel can then either be

bonded to the front of the instrument panel or it could be drilled near the corners to accept small screws to hold it to the instrument panel. The controls would then be attached to the SmartASS panel using their fixing nuts.

4. The SmartASS control panel could be discarded altogether and the controls mounted in some other way of your own devising.

However the controls are mounted, take care to ensure that the wires are not subject to excessive strain and that they cannot vibrate enough to fracture the terminals. If the cables are too long, coil them up and secure with cable ties.

2.4 Pitot and static connections

Depending on the model purchased, the enclosure is equipped with either push-fit pneumatic connectors suitable for hose with an outside diameter of 6 mm or 1/8 BSP female connectors.

If using the push-fit connector version, the hose must be of the correct outside diameter (6mm) and have a smooth surface. Ensure that the hose ends are cleanly cut and that the hoses are inserted fully into the connectors. To remove a hose from the connector, you must push the blue plastic part of the connector towards the threaded body while pulling the hose out.

Exactly how the pitot and static connections are plumbed into the aircraft's pitot and static lines will be different for each aircraft but, generally speaking, tee connectors can be inserted into the existing lines so that the SmartASS is connected in parallel with the existing ASI. Take care to ensure that all the connections are sound and that no leaks are present.

Important

Once the installation is completed, carry out a leak test on the pitot and static lines to ensure that no leaks have been introduced.

2.5 Electrical connections

Just three wires need to be connected:

Black wire (ground)

This is connected to the main ground busbar or a ground associated with the radio or audio system.

Red wire (power)

This is connected to +12V via a fuse or circuit breaker. The current requirement of the SmartASS is very small so the fuse rating need not be more than 1A.

White wire (audio output)

This is connected to an auxiliary or music input of the aircraft's existing radio/intercom/audio panel installation. Exactly where this should be

connected obviously depends on the specific equipment being connected to.

Development of the SmartASS was carried out in conjunction with a Flightcom 403mc intercom unit and the output was simply connected to the 'Aux input' of that unit.

In most installations, the audio output wire probably doesn't need to be shielded unless it is very long or it runs near to a source of electrical noise. If you wish to shield the wire, the easiest way of doing that is to remove the braded shield intact from a piece of shielded cable and slip that over the audio output wire, connecting one end of the shield to ground. Heatshrink sleeving can be used to stop the ends of the shield from fraying

All three wires should be trimmed to length rather than coiled up if they are too long.

Ensure that the screws that fasten the D-type connector to the SmartASS are reasonably tight so that the connector will not come adrift.

Figure 2.2 on the facing page shows the connections to the SmartASS enclosure.

Note

Intercoms and radios often have the ability to mute the auxiliary input when radio transmissions are being received. It is up to you to decide whether to mute the output from the SmartASS or not.

During development, it was found that muting the SmartASS when radio messages were received was distracting because its spoken messages were broken up. It was better to not mute the SmartASS but, instead, to keep its volume fairly quiet so you can still easily hear radio transmissions.

If you wish to add a switch to mute the output, you could simply wire the switch into the white wire to disconnect the audio output.

Note

If the volume of the SmartASS's output is not well matched to the sensitivity of the existing equipment's input and that equipment has no means of adjusting its sensitivity, please contact Smart Avionics for advice.

Figure 2.2: Connections

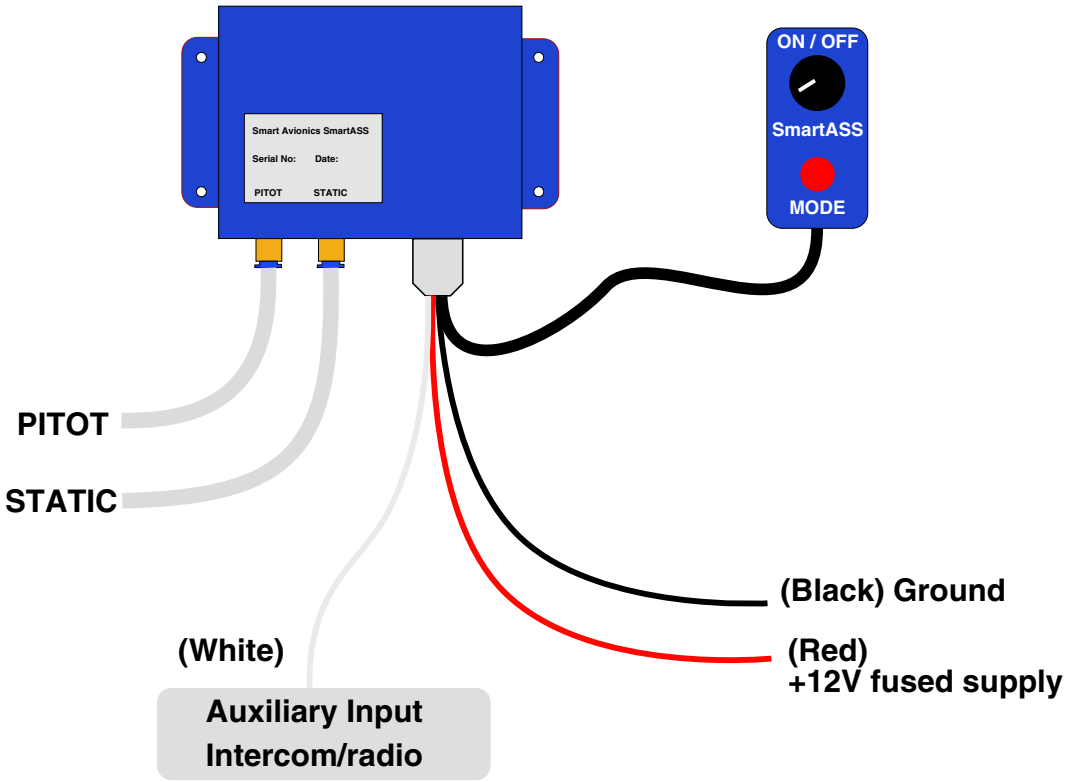

2.6 Installation approval

Before the aircraft can be flown with the SmartASS installed, the installation has to be approved. Exactly how this is achieved differs from country to country.

In the UK, the installation must be inspected and approved by your PFA inspector and an entry made in the airframe log book. The PFA will need to be informed that the SmartASS has been fitted.

Chapter 3

Using the SmartASS

3.1 The operating modes

The SmartASS has two modes of operation:

Talking ASI Mode

This mode simply speaks the current airspeed every few seconds. The repeat period can be either 2.5 or 5 seconds (selectable at installation time). Also, if the speed changes very rapidly, the new speed is spoken straight away.

When the speed is less than 25 Knots (30 MPH, 50 KPH) the voice is muted. When the SmartASS is turned on, it always starts in talking ASI mode.

Speed Director Mode

In this mode, the airspeed is continuously measured and compared to a target speed. The SmartASS reports as follows:

- If the speed is within 5% of the target speed, it says 'Speed Good' every 8 seconds
- If the speed is between 5% and 10% too fast, it says 'Fast' every 4 seconds.
- If the speed is between 5% and 10% too slow, it says 'Slow' every 4 seconds.
- If the speed is between 10% and 15% too fast, it says 'Very Fast' every 2 seconds.

- If the speed is between 10% and 15% too slow, it says 'Very Slow' every 2 seconds.
- If the speed is more than 15% too slow or too fast, the appropriate message is prefixed with a chime.

If the speed drops to below 25% of the target speed, the SmartASS switches to talking ASI mode.

Note

- When using speed director mode, try not to 'chase' the airspeed.
- Unless the airspeed is wildly wrong, don't make large adjustments to the airspeed.
- Aim to smoothly increase or decrease the speed to keep the 'speed good'.
- Remember that the airspeed cannot change instantly, it takes a few moments for a change in attitude or power to have an effect on the airspeed and a bit longer for the SmartASS (and your mechanical ASI) to measure that speed.

3.2 The controls

The SmartASS has been designed to be very easy to use. Just two controls are provided:

1. Volume control + on/off switch
2. Mode button

The combined on/off switch and volume control works in the conventional manner: turning the volume control clockwise increases the volume of the speech. Turning the volume control anti-clockwise reduces the volume and when turned fully anti-clockwise, switches off the power to the SmartASS.

When the SmartASS is switched on, it says 'Airspeed in Knots[1]' and then if the unit auto-zeros itself it will say 'Zeroed'. Section 3.3 on page 18 has more information about zeroing.

[1] Or MPH or KPH depending on the units selected during installation.

Important

If when the SmartASS is switched on the airspeed is at least 25 Knots (30 MPH, 50 KPH), the voice will say 'Compare to ASI' after the speed is first reported. This is to remind the pilot to check that the spoken speed is consistent with the speed indicated on the ASI. If the speeds tally, the SmartASS can be considered trustworthy. If there is a significant difference between the spoken speed and the speed shown on the ASI, the SmartASS should not be used until the discrepancy has been investigated.

The mode button has two primary functions:

Selecting the operating mode

Pressing the mode button briefly toggles the mode of operation between talking ASI mode and speed director mode. The mode change is announced as follows: when talking ASI mode is selected, the SmartASS says 'Airspeed'. When speed director mode is selected, the SmartASS announces the (previously captured) target airspeed by saying 'Target speed is ...'. Listen to the number it says and confirm that is the speed you want. If the number it says is not what you want, you will need to capture a new airspeed as described next. Until an airspeed has been captured, the SmartASS will not select speed director mode.

Capturing the target airspeed

Pressing the mode button for more than 1/2 second 'captures' the current airspeed and switches to speed director mode if that mode is not already active. The new target airspeed will be announced as 'Target speed is ...' and will be stored until another speed is captured. The target airspeed is remembered even when the power is off.

3.3 Zeroing the SmartASS

To ensure the airspeed reported by the SmartASS is as accurate as possible, the unit requires zeroing occasionally. This will remove any offset error introduced as the pressure sensor and the electronic components age.[2]

Whenever the SmartASS is turned on, as long as the current differential pressure is small, it will be zeroed automatically to remove the offset error. If the differential pressure is not small when the unit is turned on, this auto-zeroing will not occur.

It is possible to manually zero the SmartASS at any time by turning the unit on while pressing the mode button. When the voice says 'Zeroed', take your finger off the mode button.

Important

To ensure that the reported speed is accurate, do not manually zero the SmartASS if any of the following are true:

- The aircraft is moving at more than walking pace.
- The wind is blowing into the pitot and it is more than a very gentle breeze.
- The pitot cover is in position.

It is expected that in normal use, auto-zeroing will occur from time to time and so it should not normally be necessary to manually zero the SmartASS unless you believe the reported airspeed is incorrect.

[2] Due to the fact that airspeed is proportional to the square root of the dynamic pressure, the effect of a small offset error in the pressure measurement is only really significant at very low airspeeds. It's still worth removing the error to get the best possible result.

Appendix A

Voice Customisation

The SmartASS voice can be customised by providing a new set of sound files. The new sound files are stored on a Multi Media Card (MMC) which is then inserted into a socket on the SmartASS PCB. This Appendix describes the sound files required and the generic procedure for installing them.

MMC cards are made by many manufacturers and come in different capacities. It is not guaranteed that the SmartASS will work with all known MMC cards. Development was carried out using a SanDisk 128MB card. As less than 1 MB of storage is required for the sound files, smaller capacity MMC cards can be used.

The original voice is not affected by the customisation process. It is simply ignored while the MMC card is present. Removing the MMC card from the SmartASS will allow the original voice to be used again.

A.1 The sound files

The voice messages played by the SmartASS are stored as a set of MP3 files. Each file contains a word or a complete phrase. To customise the SmartASS voice, each of the files listed in Table A.1 on the following page must be created containing the appropriate message.

The MP3 files should be mono, sampled at 44.1 kHz and have a bitrate of 64 K bits/second. How the audio clips are recorded and converted into MP3 files is beyond the scope of this manual but it can be done on a home computer equipped with a sound card and microphone.

Table A.1: Sound files

File Name	Content
0.mp3	Zero
1.mp3	One
2.mp3	Two
3.mp3	Three
4.mp3	Four
5.mp3	Five
6.mp3	Six
7.mp3	Seven
8.mp3	Eight
9.mp3	Nine
10.mp3	Ten
11.mp3	Eleven
12.mp3	Twelve
13.mp3	Thirteen
14.mp3	Fourteen
15.mp3	Fifteen
16.mp3	Sixteen
17.mp3	Seventeen
18.mp3	Eighteen
19.mp3	Nineteen
20.mp3	Twenty
30.mp3	Thirty
40.mp3	Forty
50.mp3	Fifty
60.mp3	Sixty
70.mp3	Seventy
80.mp3	Eighty
90.mp3	Ninety
airspeed.mp3	Airspeed
and.mp3	And
asik.mp3	Airspeed in knots
asikph.mp3	Airspeed in kilometers per hour
asimph.mp3	Airspeed in miles per hour
chime.mp3	Ding!
cmptoasi.mp3	Compare to ASI
fast.mp3	Fast

(continued on next page)

Table A.1: Sound files (cont.)

File Name	Content
good.mp3	Good
hundred.mp3	Hundred
slow.mp3	Slow
speed.mp3	Speed
tsi.mp3	Target speed is
veryfast.mp3	Very fast
veryslow.mp3	Very slow
zeroed.mp3	Zeroed

A.2 Copying the files the MMC card

Once the required audio files have been created, they must be copied to a MMC card using the following generic instructions:

1. Reformat the MMC card so that it is completely empty. The card must be formatted such that it contains a FAT16 filesystem (probably the default on most systems).
2. Copy the audio files to the MMC card.
3. Insert the MMC card into the socket on the SmartASS PCB. The socket is located on the right hand side of the PCB under the flexible cable.

Important

It is particularly important that the MMC card is reformatted before any files are copied to it. If you wish to replace a single file on the card, you must still reformat the card and copy all the files again. If you do not do this, the sound files may be partially or wholely unreadable.

Index

A
airspeed
    capturing, 17

C
capturing airspeed, 17
configuring
    repeat period, 8
    speed units, 8
connections
    electical, 11
    pitot and static, 11
control panel
    mounting, 9

E
electrical connections, 11
enclosure
    mounting, 9

I
installation
    approval, 13

J
jumper
    configuration, 7

K
Knots, 8
KPH, 8

M
MMC card, 19
mode
    button, 17
modes of operation, 15
MP3 file, 19
MPH, 8
mute
    audio input, 12
    switch, 12

O
on/off switch, 16
operating modes, 15

P
pitot connnection, 11

S
specifications, 4
speed director mode, 2, 15
static connection, 11

T
talking ASI mode, 15

V
voice
    customise, 19
volume control, 16

Z
zeroing, 18