TANNOY®
professional

PowerDual
iQ 18B
USER MANUAL

CONTENTS

1. Introduction 5
2. Unpacking 5
3. Connectors/Cabling 5
4. Polarity Checking 6
5. Amplification & Power Handling 6
6. Operation 6
7. Equalisation 7
8. Dimensions 7
9. Positioning 8
10. Flying 9
    10.1. Flying an iQ 18B 10
    10.2. Flying Double iQ 18B 10
    10.3. Flying an iQ 18B with iQ 10 11
    10.4. Flying Double iQ 18B and iQ 10 12
11. Performance Data 13
12. Technical Specifications 14
13. iQ 18B Service Parts and Accessories 16
14. Warranty 16

1. Introduction

Thank You for purchasing Tannoy PowerDual™ iQ i8B.

The iQ 18B is a dedicated sub-woofer designed for high definition sound reinforcement at low frequencies. It comprises an 18" driver in a horn-loaded cabinet, giving increased efficiency and improved LF output.

For optimal performance, the iQ 18B has been designed to operate in conjunction with the iQ 10 mid/high horn-loaded cabinet, where the system is controlled by a dedicated loudspeaker management system TDX2.

The cabinet is constructed from high quality 18mm birch plywood, featuring handles for easier transportation, convenient M8 flying points and a pole-mount stand socket that serves as a base for locating the iQ 10 mid/high speakers in the air.

2. Unpacking

Every Tannoy iQ 18B is carefully tested and inspected before packing. After unpacking, please inspect your iQ 18B for any damage sustained during transit. In the unlikely event of any damage, would you please notify your dealer immediately and retain your shipping carton, as your dealer may ask the faulty unit to be returned for inspection.

3. Connectors/Cabling

The iQ 18B is fitted with two 4-pole Speakon™ connectors. Speakon™ has the following advantages over EP and XLR type connectors: All terminations are solderless, making life easier at the time of installation or when field servicing is required. Contacts will accept 6 sq. mm wire with an outside diameter of up to 15 mm and a current rating of 30 Amps.

The pins of the two Speakon™ sockets, marked input/output on the rear of the speaker, are paralleled within the enclosure.

Tannoy has adopted the following wiring standard for iQ 18B: -

SPEAKON™ CONNECTOR	SIGNAL
Pin 1+	**Positive**
Pin 1-	**Negative**

Should you encounter any problems obtaining Speakon™ connectors, please contact Neutrik or its distributors on the following numbers: -

UK: NEUTRIK MARKETING: 01983 811 441

USA: NEUTRIK USA INC.: 732 901 9488

For a worldwide list of distributors, please contact Neutrik directly on: -

NEUTRIK AG: +423 237 2424

Or visit their website on http://www.neutrik.com/

Cable choice consists mainly of selecting the correct cross sectional area in relation to the cable length and the load impedance. A small cross sectional area would increase the cables series resistance, inducing power loss and response variations (damping factor).

Connectors should be wired with a minimum of 2.5 sq. mm (12 gauge) cable. This will be perfectly satisfactory under normal conditions. In the case of very long cable runs the wire size should exceed this, refer to the following table for guidance: -

CABLE RUN (m)	C.S.A. OF EACH CONDUCTOR (mm)	CABLE RESISTANCE Ω	% POWER LOSS INTO 8Ω LOAD	% POWER LOSS INTO 4Ω LOAD
10	2.5	0.14	1.7	3.5
	4.0	0.09	1.1	2.2
	6.0	0.06	0.73	1.5
25	2.5	0.35	4.3	8.6
	4.0	0.22	2.7	5.4
	6.0	0.14	1.8	3.6
50	2.5	0.69	8.6	17.0
	4.0	0.43	5.4	11.0
	6.0	0.29	3.6	7.2
100	2.5	1.38	17.0	35.0
	4.0	0.86	11.0	22.0
	6.0	0.58	7.2	14.0

4. Polarity Checking

It is most important to check the polarity of the wiring. A simple method of doing this is to use a pulse based polarity checker for LF units. Connect the speaker leg which you believe to be connected to Pin 1 to the +ve terminal of the amplifier and likewise Pin 2 to the –ve terminal of the amplifier. Check the phase as instructed by the polarity checker manufacturer. If you have wired it correctly, the polarity checker should indicate the LF unit is wired in phase, indicating the wiring is correct. If however the polarity checker indicates negative phase, the input connections must be inverted.

If problems are encountered, inspect the cable wiring in the first instance. It should also be noted that different amplifier manufacturers utilise different pin configurations and polarity conventions. If you are using amplifiers from more than one manufacturer, check the polarity at the amplifiers as well as the loudspeakers.

5. Amplification & Power Handling

As with all professional loudspeaker systems, the power handling is a function of voice coil thermal capacity. Care should be taken to avoid running the amplifier into clip (clipping is the end result of overdriving any amplifier). Damage to the loudspeaker will be sustained if the amplifier is driven into clip for any extended period of time. Headroom of at least 3dB should be allowed. When evaluating an amplifier, it is important to take into account its behaviour under low impedance load conditions. A loudspeaker system is highly reactive and with transient signals it can require more current than the nominal impedance would indicate.

Generally, a higher power amplifier running free of distortion will do less damage to the loudspeaker than a lower power amplifier continually clipping. It is also worth remembering that a high powered amplifier running at less than 90% of output power generally sounds a lot better than a lower power amplifier running at 100%. An amplifier with insufficient drive capability will not allow the full performance of the loudspeaker to be realised.

It is important when using different manufacturers amplifiers in a single installation that they have very closely matched gains, the variation should be less than ±0.5dB. This precaution is important to the overall system balance when only a single compressor/limiter or active crossover is being used with multiple cabinets; it is therefore recommended that the same amplifiers be used throughout.

6. Operation

For optimal performance the PowerDual™ iQ 18B has been designed to operate with PowerDual™ iQ 10 mid/high cabinet, where overall system control is achieved by utilising the TDX2 system controller. The TDX2 has been factory preset to provide the recommended cross-over points, delays and overall system balance. Please refer to the TDX2 manual for operation.

If you intend using an alternative loudspeaker management system (e.g. BSS™, Klark Teknik™, XTA™ etc) please contact your distributor or visit our website, www.tannoy.com for the correct parameter settings or refer to the recommended crossover points in the technical specifications section of this manual.

7. Equalisation

The iQ 18B loudspeaker is designed to need no equalisation or correction to overcome system limitations. As a result, it will only need equalisation to compensate for difficult acoustic environments.

Over equalisation can reduce system headroom, and introduce phase distortion resulting in greater problems than cures. If equalisation is required then it should be applied gently and smoothly. Violent equalisation will be detrimental to the overall sound quality.

8. Dimensions

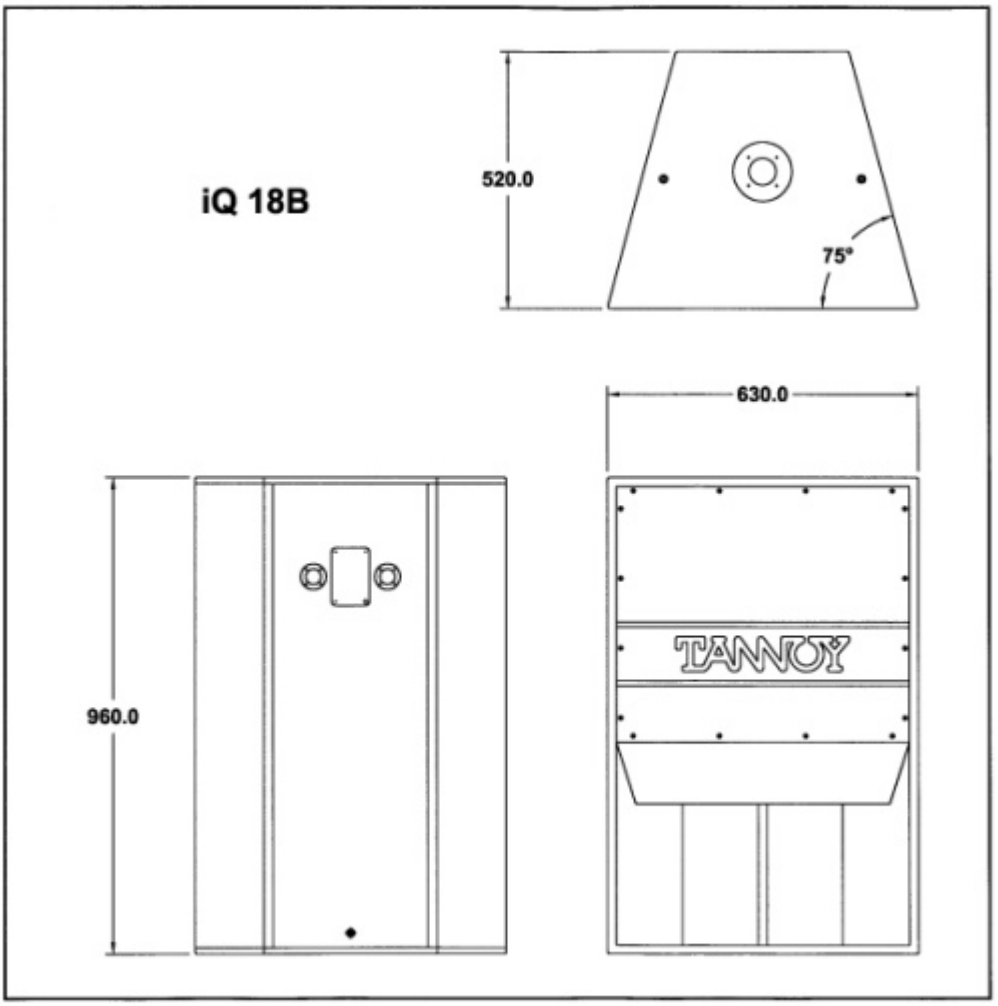

9. Positioning

When a bass loudspeaker is used in an environment with boundary surfaces, its placement affects its frequency response. When such effects are properly understood, they can be used to great effect in producing the desired sound quality without the aid of additional amplification.

Consider *Figure 8a* in the diagram below, here we see a loudspeaker in free field or anechoic conditions. We measure its sound pressure level at a distance D, and refer to this as our reference level, or 0 dB SPL.

If we now place a large reflective surface (i.e., a wall, ceiling or floor) next to the loudspeaker, *Figure 8b*, the sound that is radiated towards the boundary is reflected. As a result, the sound pressure level can increase by as much as 3dB (effectively doubling the available amplifier power). The loudspeaker is radiating its power into half as much space, this is known as *half space loading*. For each additional boundary, the SPL can increase by 3dB. Corner placement or eighth space loading can increase a bass speakers' efficiency by up to 9dB.

This effect is not the same at all frequencies. Loudspeakers are only essentially omni directional at low frequencies (where the wavelength is large compared to the loudspeaker). At high frequencies sound radiates in a more directional manner. We can position full range loudspeakers next to a boundary in order to boost the lower frequencies while the highs remain unchanged.

Coupling, or placing bass cabinets together will also increase bass output.

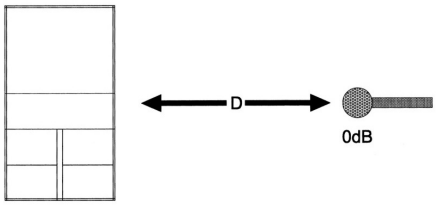

Figure 8a

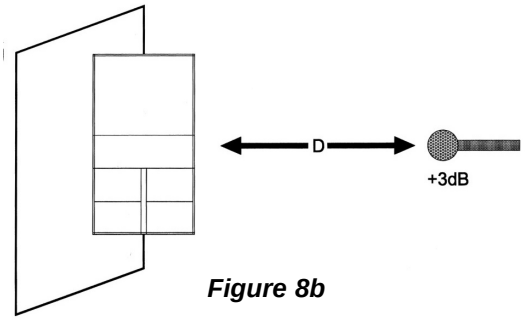

Figure 8b

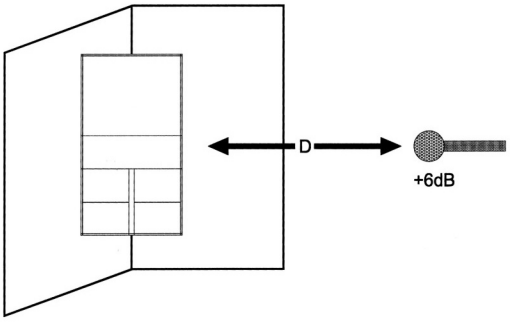

Figure 8c

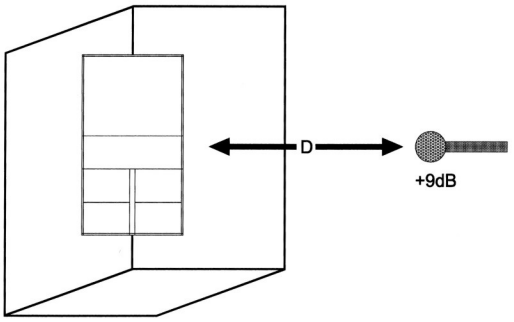

Figure 8d

10. Flying

Convenient flying points are provided on the iQ 18B which will allow the optional flying equipment to be used, as shown in *Figure 10a*. In the addition to flying the iQ 18B by itself, it can also be flown in conjunction with Tannoy iQ 10 Mid/High unit. They can also be configured to be flown double. Please refer to the following sections for more detailed instructions. A pole mount is also provided for flying a mid/high cabinet in the air. The optional Eyebolt Set can be used when flying an individual iQ 18B.

The following optional flying kit is available:

1) SR18 Rail Kit
2) SR18/10 Rail Kit
3) JK1 Jointing Kit
4) SCB Beam Kit
5) EBS10 Eyebolt Set

The easy to use system combines flexibility with the highest levels of safety. As with any flying system, safety can only be guaranteed when all precautions have been implemented correctly.

NOTE: The installation of this product must be carried out in conformity with local building codes and standards. If necessary, consult your local safety standards officer before installing any product. Alternatively, check any laws or bylaws. Tannoy will not be held responsible for any damage caused by the improper installation of any flying gear or loudspeaker.

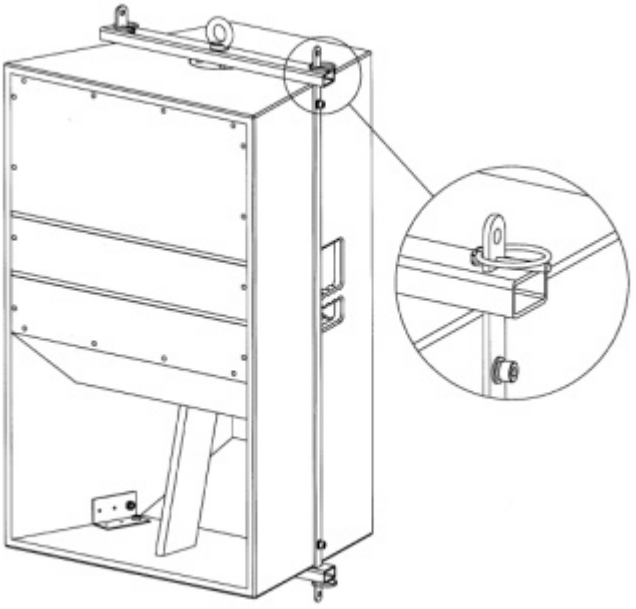

Figure 10a

10.1. Flying an iQ 18B

To fly the iQ 18B by itself, the following accessories are required: SR18 Side Rail Kit and SCB Beam Kit.

The flown system is assembled as shown in *Figure 10b*. The SR18 side rail kit is screwed to the side of the cabinet using the screws provided (*1*). The SCB Beam Kits are then placed above and below the speaker (*2*). The Lynch Pin is inserted into the holes of the side rail kit top and bottom (*3*) and the Pin folded to secure it in place (*Figure 10c*).

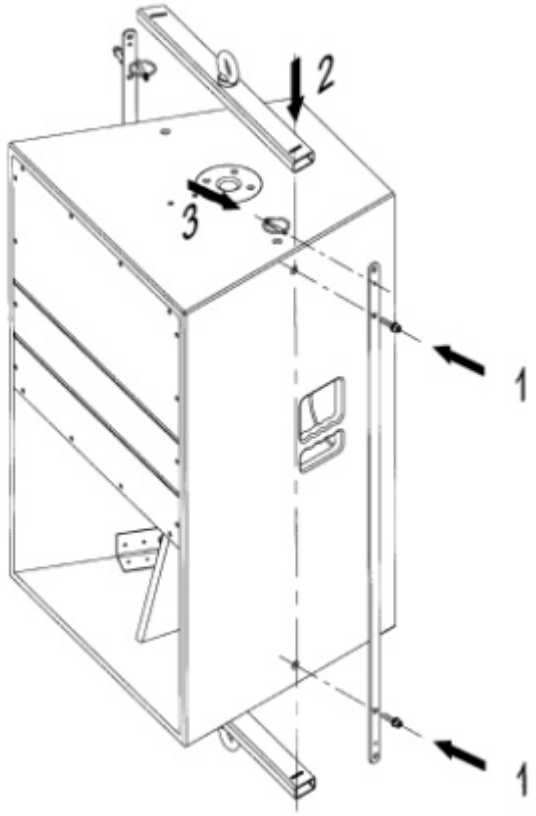

Figure 10b

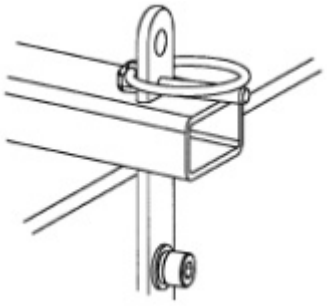

Figure 10c

10.2. Flying Double iQ 18B

To fly two iQ 18Bs, the following accessories are required: 2 × SR18 Side Rail Kit, 2 × SCB Beam Kit and 1 × JK1 Jointing Kit.

The flown system is assembled as shown in *Figure 10d*. The SR18 side rail kit is screwed to the side of each cabinet using the screws provided (1). The JK1 Jointing Kit is slotted between two SCB Beam Kits for both the top and bottom (2). The combined SCB Beam Kits are placed above and below the speaker (3). The Lynch Pin is inserted into the holes of the side rail kit top and bottom (4) and the Pin folded to secure it in place (*Figure 10c*, page 10).

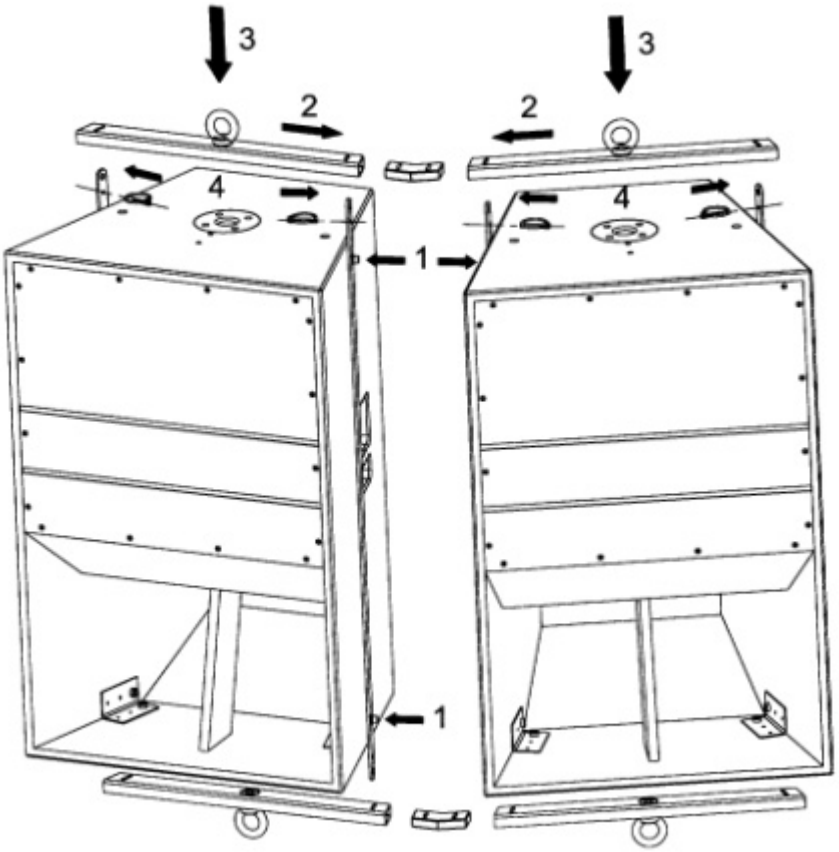

Figure 10d

10.3. Flying an iQ 18B with iQ 10

To fly the iQ 18B with the iQ 10 Mid/High unit (with optional trapezoidal cabinet), the following accessories are required: SR18/10 Side Rail Kit and SCB Beam Kit.

The flown system is assembled as shown in *Figure 10e*. First, the SR18/10 side rail kit is screwed to the side of both the iQ 18B and iQ 10 cabinets using the screws provided (*1*). The SCB Beam Kits are placed above and below the speaker assembly (*2*). The Lynch Pin is inserted into the holes of the side rail kit top and bottom (*3*) and the Pin folded to secure it in place (*Figure 10f*).

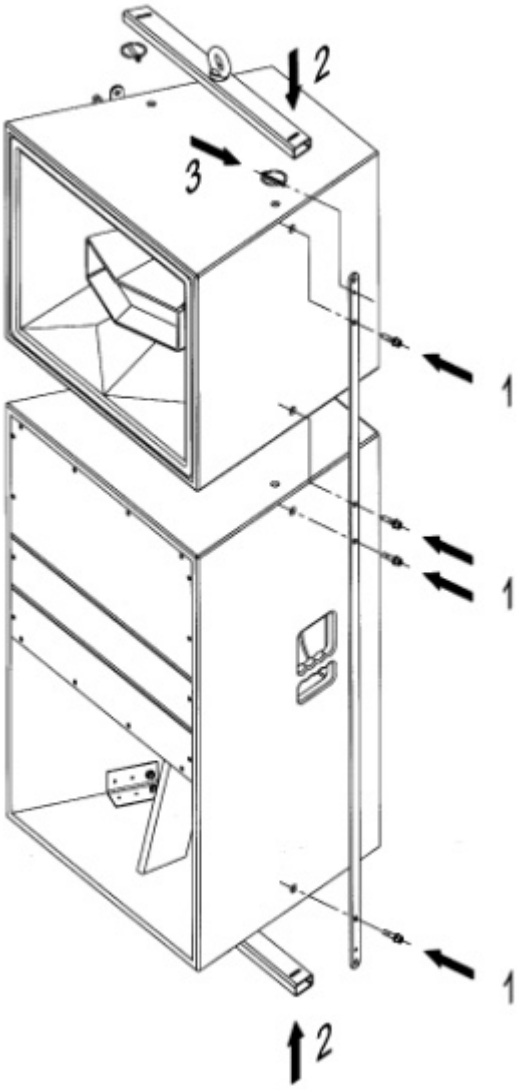

Figure 10e

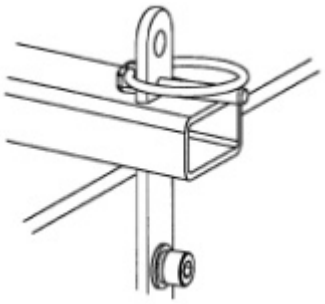

Figure 10f

10.4. Flying Double iQ 18B and iQ 10

To fly double combined iQ 18B with the iQ 10 Mid/High unit (with optional trapezoidal cabinet), the following accessories are required: 2 × SR18/10 Side Rail Kit, 2 × SCB Beam Kit and JK1 Jointing Kit.

The flown system is assembled as shown in *Figure 10g*. First, the SR18/10 side rail kit is screwed to the side of each iQ 18B and iQ 10 cabinet using the screws provided (*1*). The JK1 Jointing Kit is slotted between two SCB Beam Kits for botht he top and bottom (*2*). The combined SCB Beam Kits are placed above and below the speaker assemblies (*3*). The Lynch Pin is inserted into the holes of the side rail kit top and bottom (*4*) and the Pin folded to secure it in place (*Figure10f*, page 12).

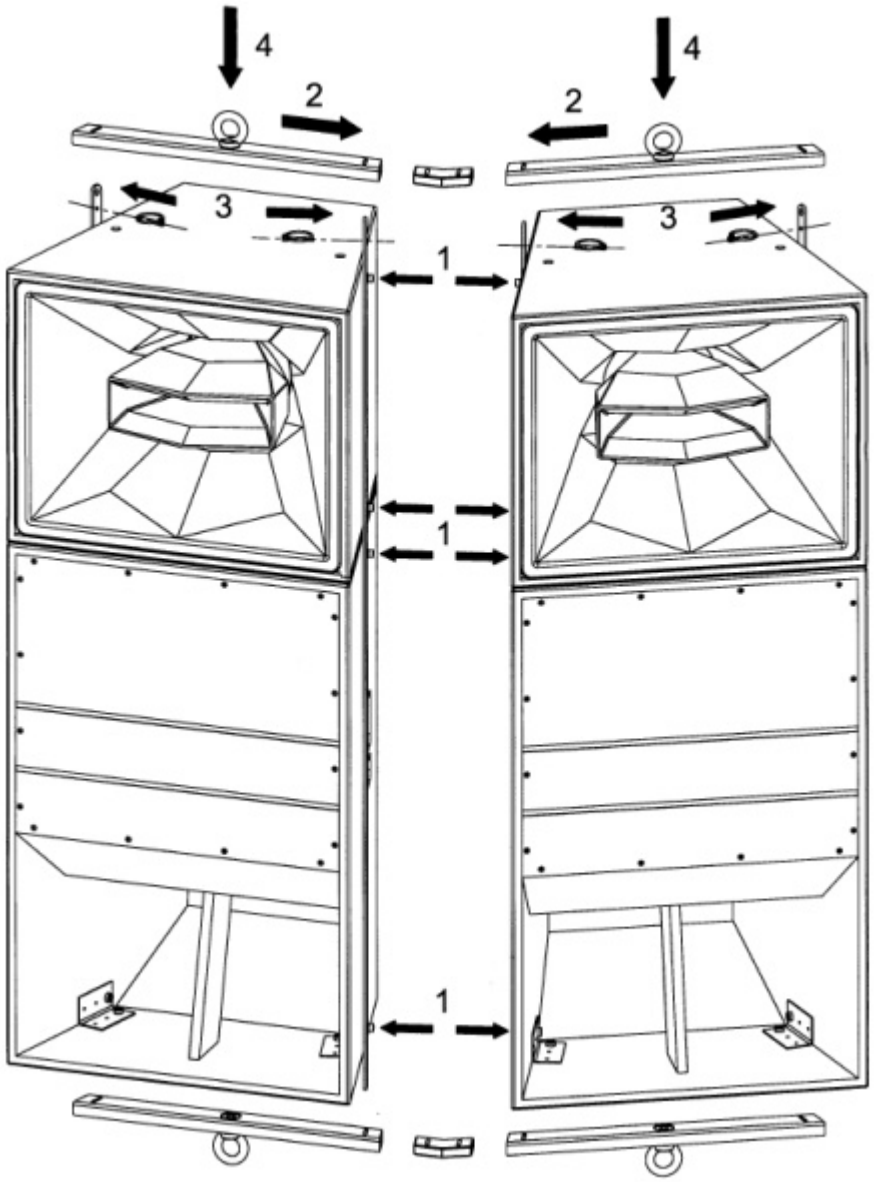

Figure 10g

11. Performance Data

Anechoic Frequency Response, with TDX2 Controller

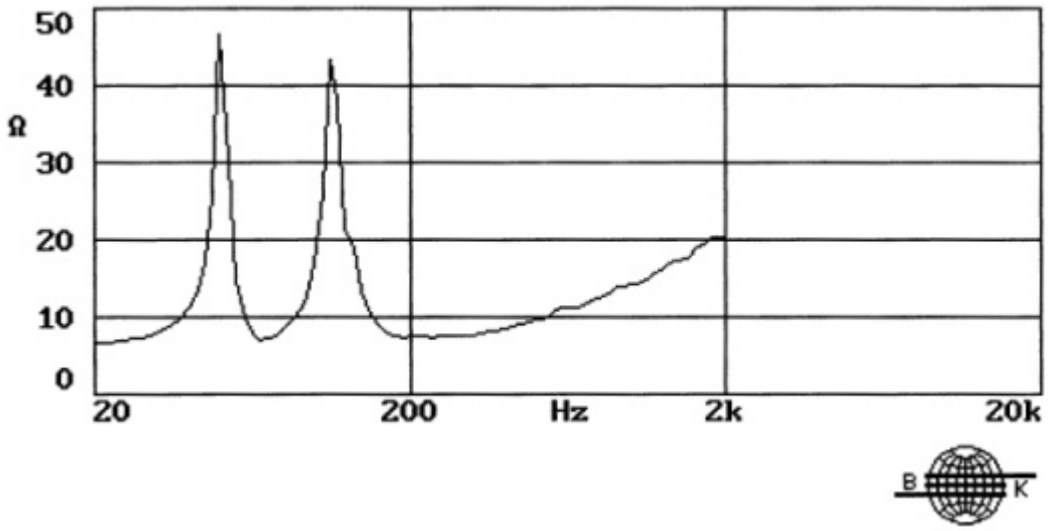

Impedance Response, Passive

12. Technical Specifications

Frequency Response	46.8-227Hz		
Recommended Amplifier Power	400 - 800 watt / 8 ohm		
Power Handling	Average (2) 400 watt	Programme 800 watt	Peak (10ms) 1600 watt
Sensitivity (1) **2.83 volt @ 1m (20-180Hz)**	95dB	98dB (half space)	
Maximum SPL (3) **@ 1m**	Average 121dB	Peak 127dB	
Impedance	Nominal Minimum	8.0Ω 7.0Ω	
Distortion			
10% Full Power	2nd Harmonic	3rd Harmonic	
100 Hz	1.91%	0.59%	
250 Hz	0.78%	1.11%	
1% Full Power	2nd Harmonic	3rd Harmonic	
100 Hz	0.56%	0.47%	
250 Hz	0.37%	0.47%	
Driver Complement	1 x 18”		
Crossover Point	Active: Recommended points 20-180 Hz, 24dB/octave, Linkwitz – Riley; Gain: +5dB		
Enclosure	Trapezoidal folded horn 18mm birch plywood		
Finish	Textured black/grey paint		
Connectors	2 x Speakon™ NL4MP – in/out		
Fittings	M8 flying inserts		
Accessories	SR18 Flying Kit, SR1810 Flying Kit, SCB Beam Kit		
Dimensions	960mm (H) × 630mm (W) × 520mm (D) 37.82” (H) × 24.82” (W) × 20.49” (D)		
Weight	52 kg 115 lb		
Shipping Dimensions	1040mm (H) × 700mm (W) × 590mm (D) 41” (H) × 27.6” (W) × 23.2” (D)		
Shipping Weight	55 kg 121 lb		

NOTES:
(1) Average over stated bandwidth. Measured at 1m on axis, in an anechoic chamber.
(2) Long term power handling capacity as defined in EIA standard RS - 426A.
(3) Unweighted pink noise input, measured at 1m

Tannoy operates a policy of continuous research and development. The introduction of new materials or manufacturing methods will always equal or exceed the published specifications which Tannoy reserve the right to alter without prior notice.
Please verify the latest specifications when dealing with critical applications

13. iQ 18B Service Parts and Accessories

Part Number	Description
7900 0954	Driver Kit Type 4504
7900 0955	Recone Kit Type 4504
8001 2070	SR 18 Side Rail Kit
8001 2080	SR 18/10 Side Rail Kit
8001 2090	JK1 Jointing Kit
8001 2180	SCB Single Cabinet Beam
8001 2190	EBS10 Eyebolt Set
8000 0727	TDX2 Digital loudspeaker management system 60-250V - UK
8000 0728	TDX2 Digital loudspeaker management system 60-250V - EUR
8000 0729	TDX2 Digital loudspeaker management system 60-250V - USA

14. Warranty

No maintenance of the PowerDual™ iQ 18B loudspeaker is necessary.

All Tannoy professional loudspeaker products are covered by a 5-year warranty from the date of manufacture subject to the absence of misuse, overload or accidental damage. Claims will not be considered is the serial number has been altered or removed. Work under warranty should only be carried out by a Tannoy Professional dealer or service agent. This warranty in no way affects your statutory rights. For further information, please contact your dealer or distributor in your country. If you cannot locate your distributor, please contact Customer Services, Tannoy Ltd at the address given below.

Customer Services
Tannoy Ltd.
Coatbridge
ML5 4TF
Scotland

Telephone:	01236 420199	(National)
	+44 1236 420199	(International)
Fax:	01236 428230	(National)
	+44 1236 428230	(International)
E-Mail:	service@tannoy.com	
Website:	www.tannoy.com	

DO NOT SHIP ANY PRODUCT TO TANNOY WITHOUT PREVIOUS AUTHORISATION

Our policy commits us to incorporating improvements to our products through continuous research and development. Please confirm current specifications for critical applications with your supplier.

EASEÔ Data for Tannoy Professional products available on request.

TANNOY®
professional

Tannoy Limited, Professional Division, Coatbridge, Strathclyde, ML5 4TF, Scotland.
Tel: +44 (0) 1236 420199 Fax +44 (0) 1236 428230
e-mail: prosales@tannoy.com Website: www.tannoy.com

Tannoy / TGI North America Inc., 335 Gage Avenue, Suite 1, Kitchener, Ontario, Canada N2M 5E1.
Tel: (519) 745-1158 Fax: (519) 745-2364
e-mail: inquiries@tgina.com Website: www.tannoy.com

Tannoy Nederland b.v., Anthonetta Kuijlstraat 19, 3066 GS Rotterdam.
Tel: (010) 286 0554 Fax: (010) 286 0431
e-mail: info@tannoy.nl Website: www.tannoy.nl

Tannoy is a member of the TGI Group of Companies

ML 6th March 2001