Dimensional Data for 36T72R

Indoor unit : TH3672R

Indoor unit : Ceiling Mounted Type
36, 42 Type

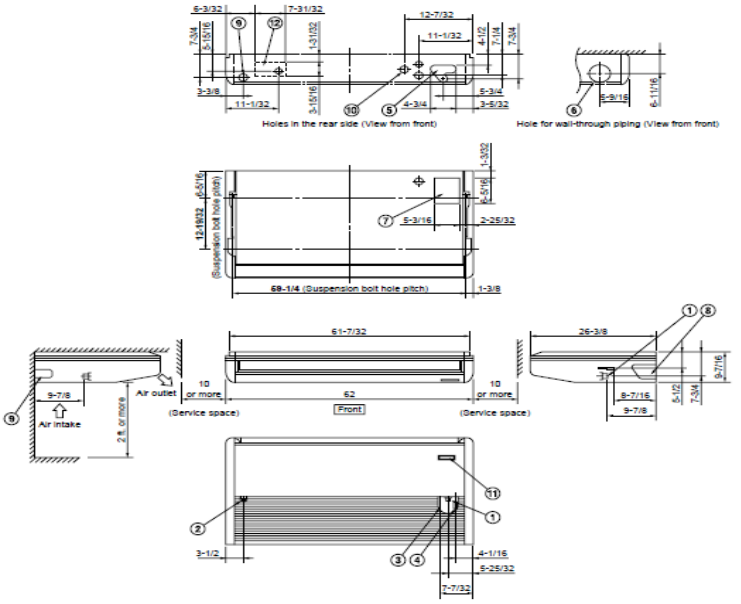

Dimension : inch

① Drain connection
② Drain connection for left side
③ Refrigerant liquid line (3/8") Flare connection
④ Refrigerant gas line (5/8") Flare connection
⑤ Hole for rear side refrigerant tubing
⑥ Hole for through-the-wall refrigerant tubing (ø3-15/16" hole)
⑦ Hole for fresh air intake (Knockout hole)
⑧ Hole for right side refrigerant tubing (Knockout hole)
⑨ Hole for left side drain connection (Knockout hole)
⑩ Hole for power supply (Conduit size 1/2")
⑪ Infrared rays receiver for wireless remote controller
⑫ Cutting position for fresh air intake

(B) Outdoor Unit: CH2672R, C2672R
CH3072R, C3072R
CH3672R, C3672R

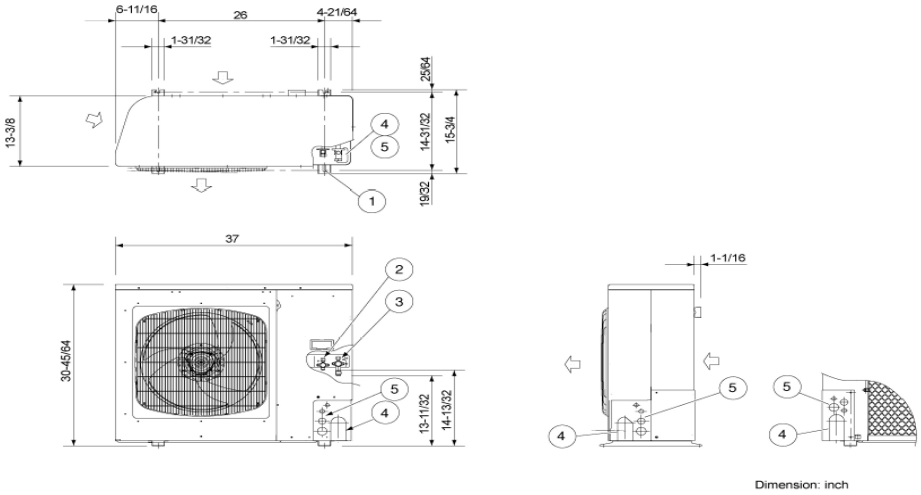

Dimension: inch

①	Hole for anchor bolt (4–R6.5) / Anchor bolt: M10
②	Refrigerant tube joint (liquid line tube) • Flare connection 3/8 in (9.52 mm)
③	Refrigerant tube joint (gas line tube) • Flare connection 5/8 in (15.88 mm)
④	Refrigerant tubing inlet (knock-out hole)
⑤	Power supply inlet (knock-out hole φ38, φ29, φ19, φ16 mm)