ARO S

THE SCIENCE OF CONTINUITY

Manuale d'uso
User manual
Betriebshandbuch
Manuel d'utilisateur
Manual de usuario

Flexus FM

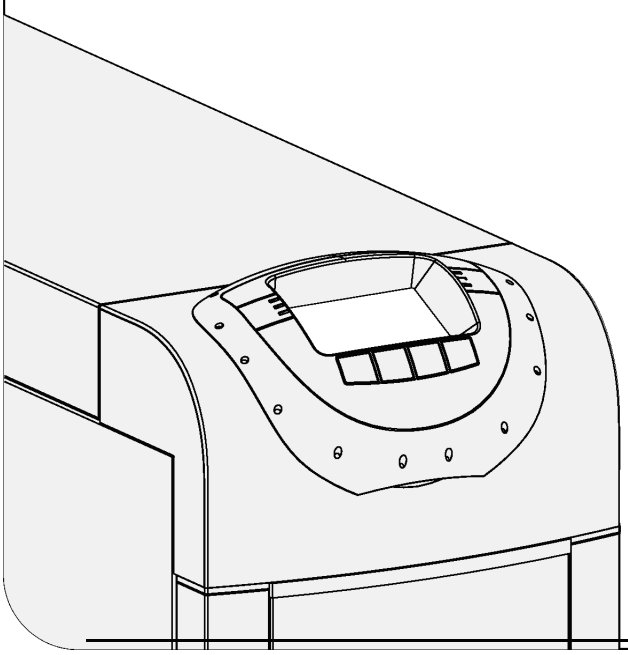

INTRODUCTION

Thank you for choosing this product.

Our company is specialized in the design, development and production of uninterruptible power supplies (UPS).

The UPS described in this manual is a high-quality, meticulously-designed product, built to guarantee the best performance.

This manual contains detailed instructions on how to use and install the product.
For information on how to use your equipment to its full potential, this manual should be kept close at hand beside the UPS and READ BEFORE STARTING TO WORK ON IT.

ENGLISH

CONTENTS

OVERVIEW

FLEXUS FM

The UPS in the ***Flexus FM*** 10 – 12 – 15 – 20 kVA series (VFI-SS-111 type) was designed using state-of-the-art technology so as to ensure the best performance for the user. The use of the new control boards based on multiprocessor architecture (DSL + μP inside) together with high-frequency IGBT technology ensures extraordinary performance from both the input stage (absorbed current harmonic distortion ≤ 3%) and the output stage (output voltage distortion ≤ 1%).
Thanks to its new, modern design, the use of a large graphic display, and above all the extra power provided by the battery charger (up to 6A recharge), the ***Flexus FM*** series represents a new reference standard for single-phase output UPS systems.

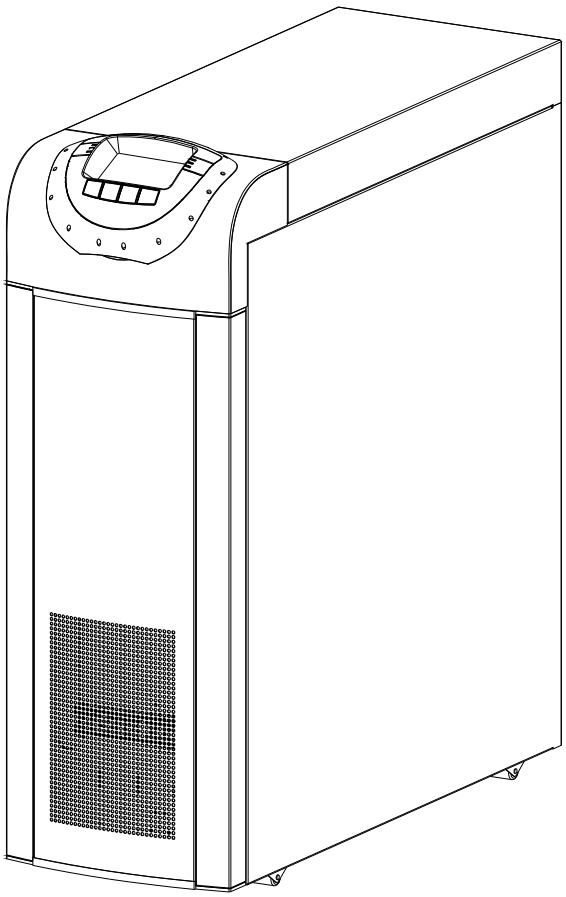

	10 kVA	12 kVA	15 kVA	20 kVA
Rated power	10000 VA 9000 W	12000 VA 10800 W	15000 VA 13500 W	20000 VA 18000 W
Output power factor	0.9	0.9	0.9	0.9
Weight (including batteries)	180 Kg	182 Kg	190 Kg	195 Kg
Width x Depth x Height	320 x 840 x 930 mm			
Options	Parallel kit – Separate bypass input – Built-in isolation transformer – Built-in additional battery charger			
Accessories	Battery cabinets – Communication boards – Remote synoptic panel			

FRONT VIEWS OF THE UPS

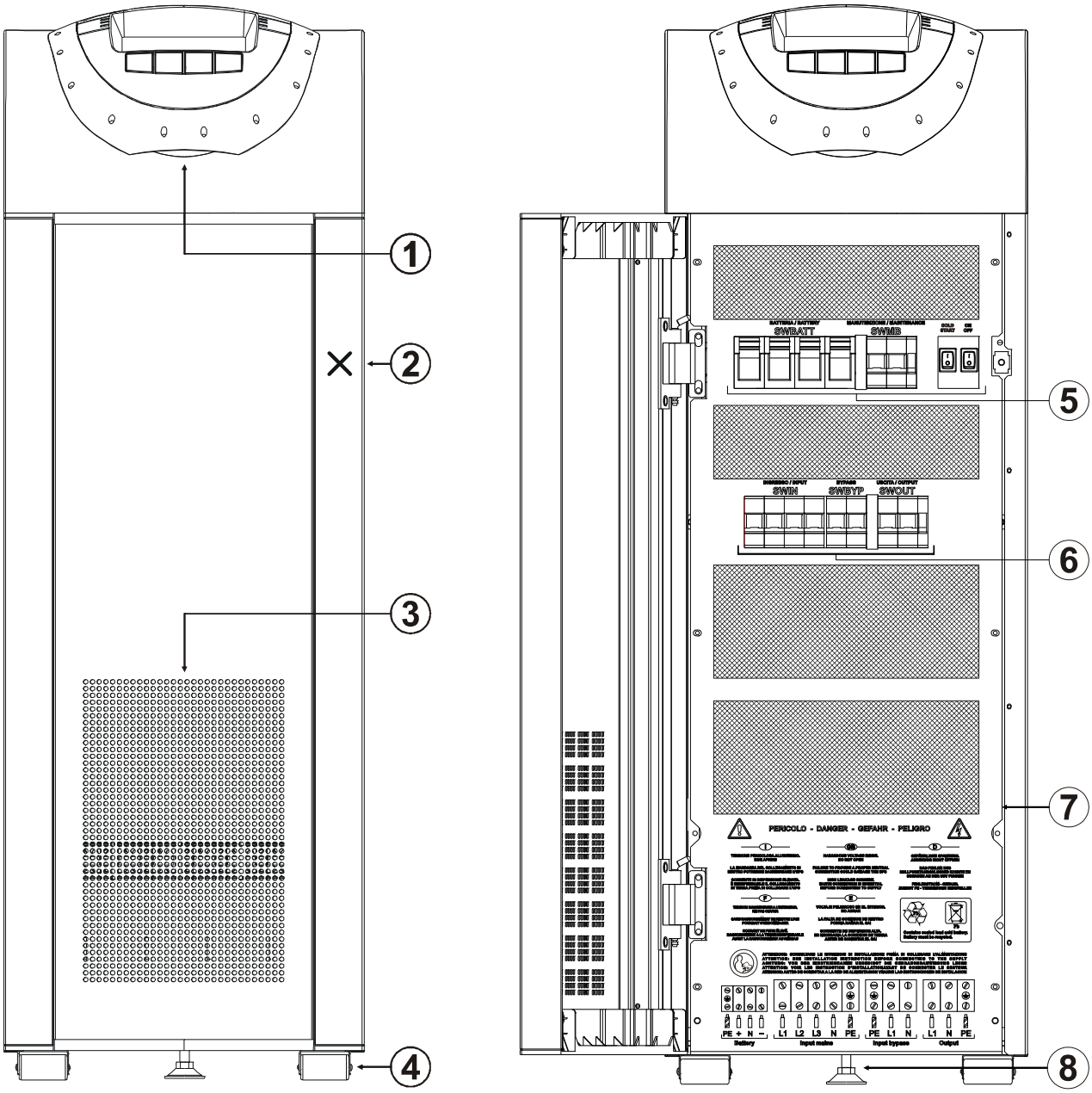

① Control panel with graphic display

② Front door (to open the door, press and release the area marked **X**)

③ Ventilation grid

④ Wheels for moving the UPS

⑤ *From left*:
Battery fuse holder isolator **/** Manual bypass switch **/** Battery start button (COLD START) **/** 1/0 main power switch

⑥ *From left*:
Input switch **/** Separate bypass switch (optional) **/** Output switch

⑦ Terminal cover with ventilation grids

⑧ Brake rod

VIEW OF THE UPS CONNECTIONS

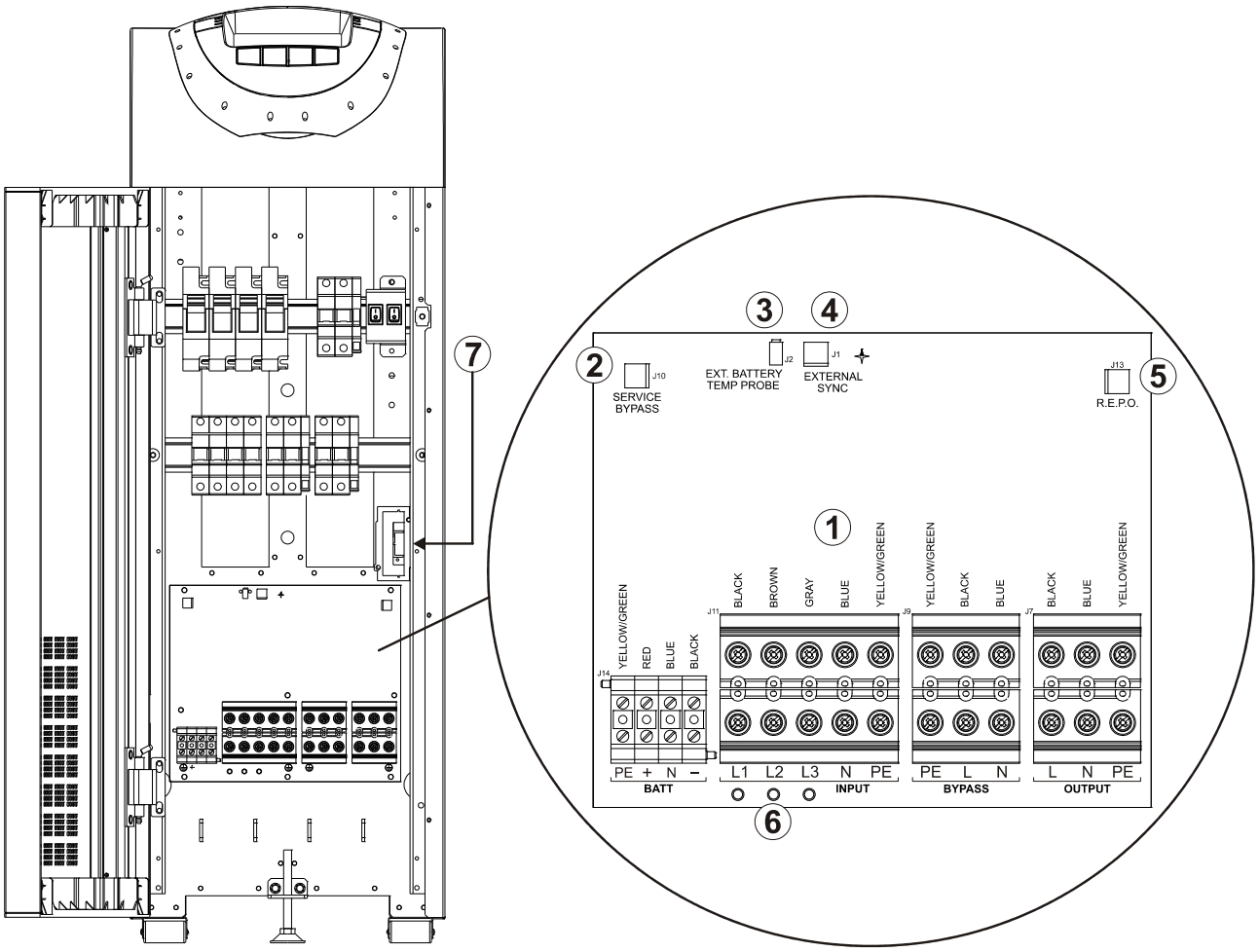

① Power connections: BATTERY, INPUT, SEPARATE BYPASS (optional), OUTPUT

② Connection for remote maintenance bypass command

③ Connection for external Battery Box temperature probe

④ Connection for external synchronization signal

⑤ Connection for R.E.P.O. (Remote Emergency Power Off) command

⑥ Area for the single-phase short-circuit bar

⑦ Slot for power relay board

REAR VIEW OF THE UPS

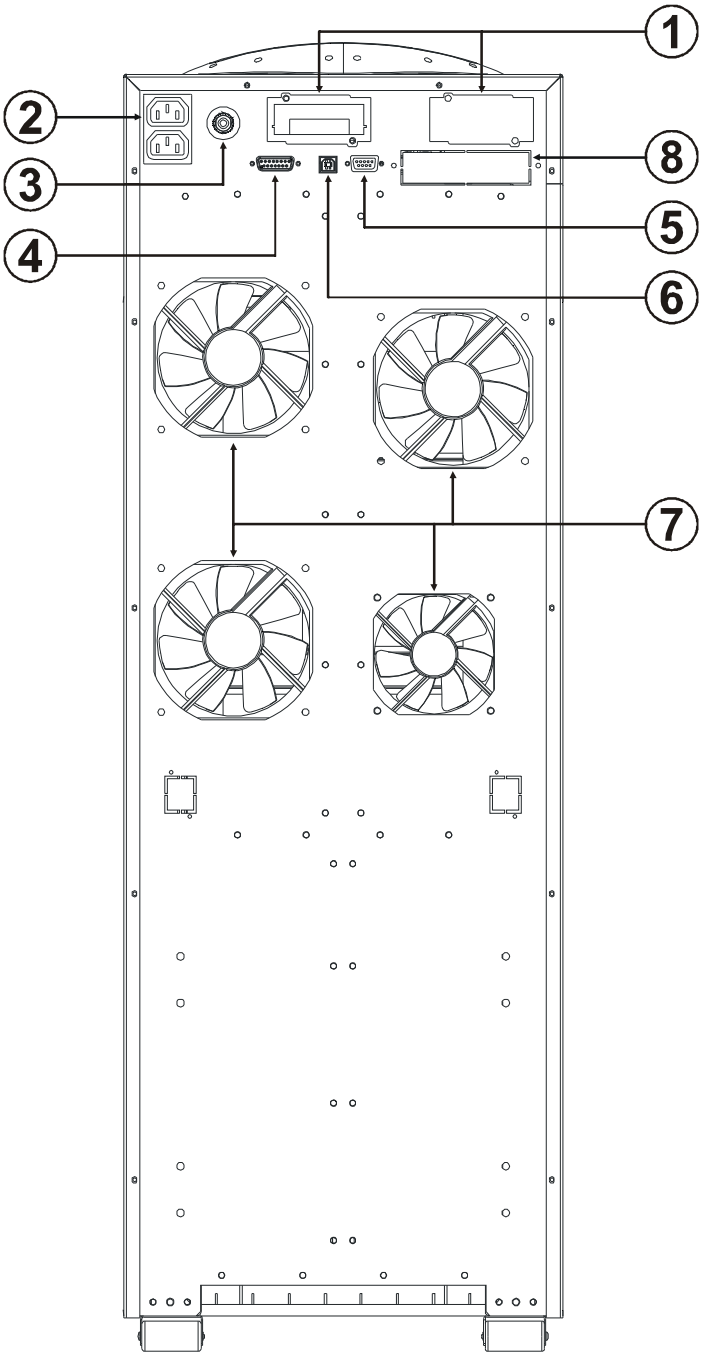

① Slots for accessory communication cards

② Powershare sockets
(max. total 10A on two sockets)

③ Powershare socket thermal protector
(manual reset)

④ Contact holder for AS400

⑤ RS232 communication port

⑥ USB communication port

⑦ Ventilation fans

⑧ Area for the parallel board (optional)

VIEW OF THE CONTROL PANEL

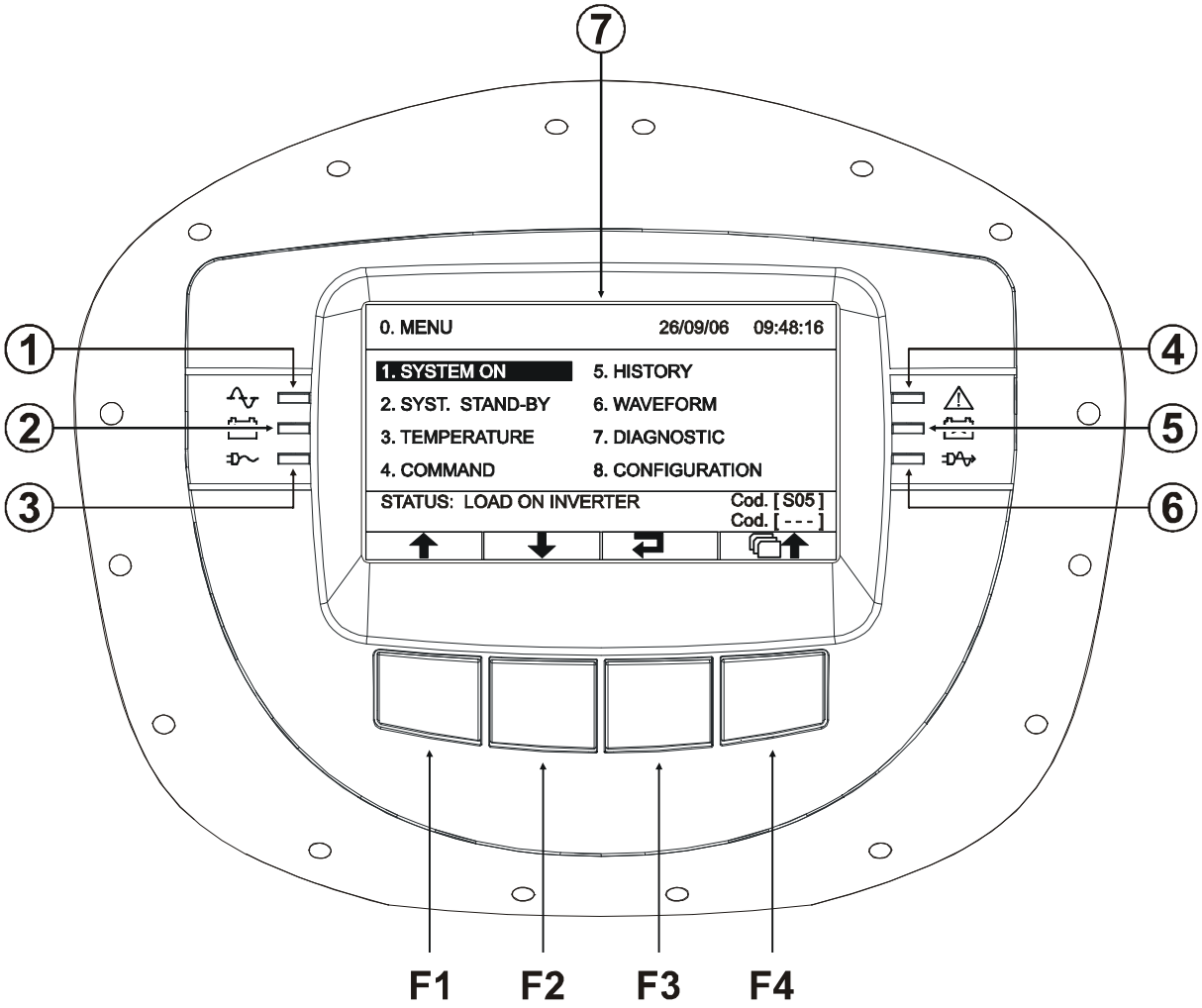

1. Mains power LED
2. Battery power LED
3. Load on bypass LED
4. Stand-by / alarm LED
5. Battery low LED
6. ECO mode LED
7. Graphic display

F1, **F2**, **F3**, **F4** = FUNCTION KEYS. The function of each key is indicated at the bottom of the display and varies according to the menu used.

BATTERY BOX (OPTIONAL)

THE BATTERY BOX IS AN OPTIONAL ACCESSORY PROVIDED FOR THIS RANGE OF UPS (SAME SIZE AND AESTHETIC DESIGN).

The Battery Box contains batteries that increase the operating time of the UPS during prolonged black-outs. The number of batteries contained in it will vary according to the type of UPS to which the Battery Box is to be installed. The utmost attention must be paid to ensure that the battery voltage of the Battery Box corresponds to that supported by the UPS.

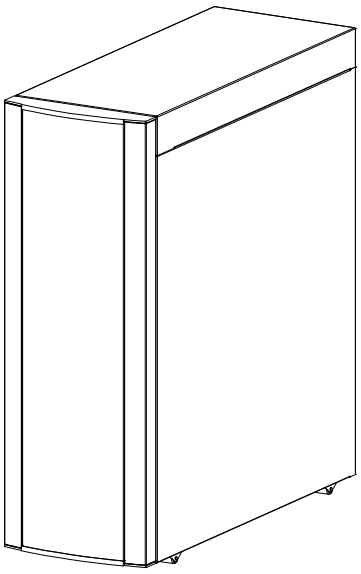

Additional Battery Boxes may be connected in a chain to obtain the desired autonomy time during a power failure.
This series of Battery Box contains two separate strings of batteries, one with a positive voltage and the other with a negative voltage with respect to the neutral terminal (N).
The basic diagram for the Battery Box is shown here below.

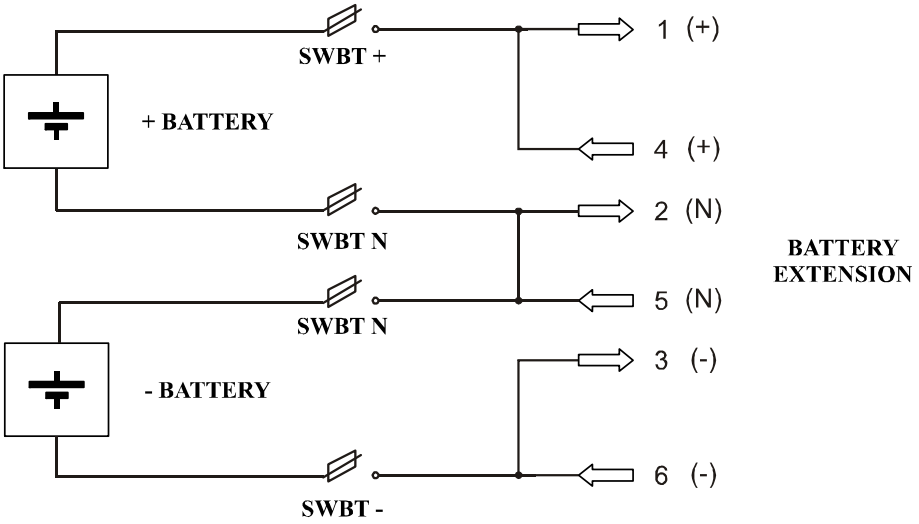

	ET06-480A-- [1]	ET06-480M-- [1]
Rated voltage	240 + 240 Vdc	240 + 240 Vdc
Weight	150Kg	270Kg
Width x Depth x Height	320 x 840 x 930 mm	

[1] *The "-" symbol stands for an alphanumeric code for in-house use*

SEPARATE BYPASS INPUT (OPTIONAL)

THE *"DI"* (OPTIONAL) VERSION OF THE UPS SERIES HAS SEPARATE BYPASS AND INPUT LINES.

The UPS series with separate Bypass ensures a separate connection between the input and bypass lines.
The UPS output is synchronised with the bypass line so as to safeguard against incorrect voltage changeovers in the alternate phases, in the event of automatic bypass or closing of the maintenance switch (SWMB).

ADDITIONAL INTERNAL BATTERY CHARGERS (OPTIONAL)

THE *"AC"* (OPTIONAL) VERSION OF THE UPS SERIES DIFFERS FROM THE STANDARD VERSION IN THAT SOME ADDITIONAL BATTERY CHARGERS ARE USED INSTEAD OF THE BATTERIES.

This series of UPS must be used together with an external Battery Box and is suitable for applications requiring long back-up times.
NOTE: A separate bypass line is supplied on this UPS version.

The additional internal battery charger cards are powered directly on mains power and have pseudo-sinusoidal wave form absorption.

If the input switch is closed but the I/O switch is open (UPS switched off) the battery chargers operate independently. Open the input switch (SWIN) to totally shutdown the UPS and the additional battery chargers.

AC Version	10 kVA	12 kVA	15 kVA	20 kVA
Nominal voltage	240 + 240 Vdc			
Current in addition to that supplied by the internal battery charger	6A@240Vdc			
UPS weight	86kg	88Kg	96Kg	101Kg

INSTALLATION

ALL THE OPERATIONS DESCRIBED IN THIS SECTION MUST BE CARRIED OUT EXCLUSIVELY BY QUALIFIED STAFF.
The Company may no be held liable for any damage caused by incorrect connections or by operations that are not described in this manual.

STORAGE OF THE UPS AND THE BATTERY BOX

The storage area must have the following characteristics:

Temperature: 0°-40°C (32°-104°F)

Relative humidity: 95% max

PREPARATION FOR INSTALLATION

PRELIMINARY INFORMATION

UPS Models	10 kVA	12 kVA	15 kVA	20 kVA
Nominal power	10000 VA	12000 VA	15000 VA	20000 VA
Operating temperature	0 - 40 °C			
Max. relative humidity during operation	90% (non-condensing)			
Max. installation height	1000 m at nominal power rating (-1% Power for every 100 m over 1000 m) max 4000 m			
Dimension W x D x H	320 x 840 x 930 mm			
Weight (with batteries)	180 Kg	182 Kg	190 Kg	195 Kg
Dissipated power with nominal resistive load (pf=0.8) and with back up battery *	0.56 kW 480 kcal/h 1910 B.T.U./h	0.670 kW 580 kcal/h 2290 B.T.U./h	0.765 kW 660 kcal/h 2610 B.T.U./h	1.02 kW 880 kcal/h 3480 B.T.U./h
Dissipated power with nominal distorting load (pf=0.7) and with charged battery *	0.49 kW 420 kcal/h 1660 B.T.U./h	0.58 kW 500 kcal/h 1990 B.T.U./h	0.670 kW 580 kcal/h 2290 B.T.U./h	0.90 kW 775 kcal/h 3070 B.T.U./h
Fan capacity at installation premises for heat dissipation **	300 mc/h	355 mc/h	410 mc/h	545 mc/h
Current dispersed to earth ***	< 7 mA			
Protection level	IP20			
Cable input	From base / on rear			

* *3.97 B.T.U./h = 1 kcal/h*

** *The following formula can be used to calculate the fan capacity: Q [mc/h] = 3.1 x P_{diss} [kcal/h] / (t_a - t_e) [°C]*
P_{diss} is the dissipated power of all the installed apparatus at the installation premises expressed in kcal/h.
ta= environmental temperature, te= external temperature. To account for leaks, increase the value obtained by 10%.
The table shows an example of the fan capacity with (t_a - t_e)=5°C and with nominal resistive load (pf=0.8).
(N.B.: The formula applies if ta>te; otherwise an air conditioner should be installed).

*** *The dispersion current of the load is added to the dispersion current of the UPS on the earth protection conductor.*

ELECTROMAGNETIC COMPATIBILITY

This Uninterruptible Power Supply (UPS) conforms to the class C2 specifications (in accordance with the provisions laid down by the EN62040-2 standard: UPS - EMC requirement). In the home environment, it may cause radio interference. The user may have to take supplementary measures.
This product is designed for professional use in industrial and commercial environments. Connections to the USB and RS232 connectors should be made with the cables provided or, in any case, with shielded cables less than 3 metres long.

INSTALLATION ENVIRONMENT

When choosing the site in which to install the UPS and the Battery Box, the following points should be taken into consideration:

- Avoid dusty environments
- Check that the floor is level and capable of withstanding the weight of the UPS and the Battery Box
- Avoid cramped environments that could impede the normal maintenance activities
- The relative humidity should not exceed 90%, non-condensing
- Check that the ambient temperature, with the UPS running, remains between 0 and 40°C

  The UPS may be operated with an ambient temperature of between 0 and 40°C. The recommended working temperature for the UPS and the batteries is between 20 and 25°C. In fact, if the battery has an average life of 5 years with a working temperature of 20°C, the life is halved if the working temperature is increased to 30°C.

- Avoid installing the equipment in places exposed to the direct sunlight or hot air

To keep the temperature of the installation room within the range indicated above, there must be a system for eliminating the dissipated heat (the Kw / Kcal/h / B.T.U./h values dissipated by the UPS are indicated in the table above). The methods that may be used are:

- *Natural ventilation*
- *Forced ventilation*, recommended if the outside temperature is less (e.g. 20°C) than the temperature at which the UPS or Battery Box is to be operated (e.g. 25°C)
- *Air-conditioning system*, recommended if the outside temperature is higher (e.g. 30°C) than the temperature at which the UPS or Battery Box is to be operated (e.g. 25°C)

REMOVING THE UPS AND THE BATTERY BOX FROM THE PALLET

- Cut the straps and remove the cardboard box by sliding it upwards

- Remove the accessory box and side blocks.
  NOTE 1: You will find the accessory box either inside the door of the UPS or on top of the UPS.

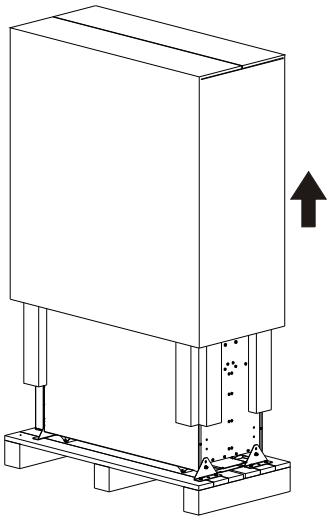

- Open the door and remove the slides.
  NOTE 2: The slides are fixed to the pallet by a screw (marked C in the figure).

- Remove the 4 brackets securing the UPS to the pallet (the screws are marked A and B in the figures).

FRONT VIEW

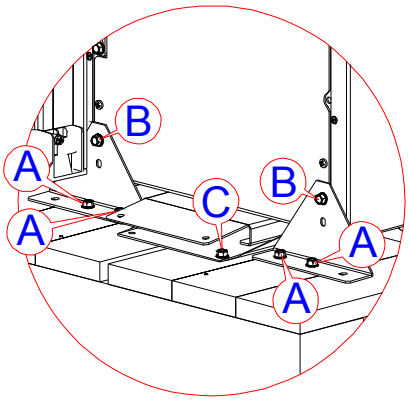

REAR VIEW

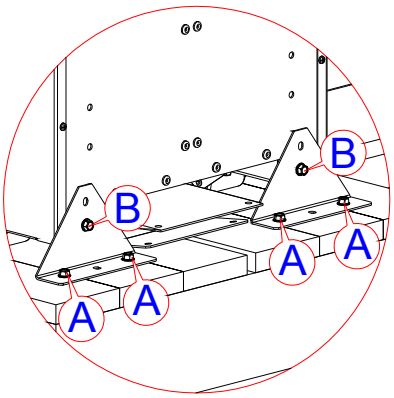

- Using 4 of the previously removed screws (type A) secure the slides to the pallet (as shown). Push the UPS from the rear off the pallet with great care. **Make sure that the door is closed before doing this**

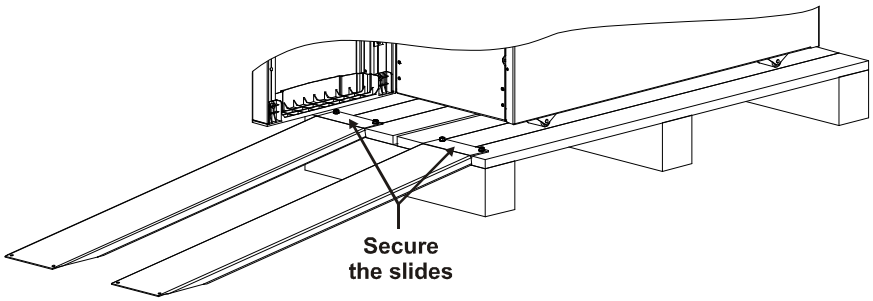

NOTE: All parts of the packaging should be kept for future use.

PRELIMINARY CHECK OF CONTENTS

Having opened the package, start by checking the contents.

UPS	BATTERY BOX (optional)
Metal slides, Guarantee document, User manual, Cd-rom containing the UPS management software, Serial connecting cable, 4 battery fuses (to be inserted in the "SWBATT" fuse holders), Short circuit bar (with 3 fastening screws)	Metal slides, Guarantee document, Cable for connecting the Battery Box to the UPS, 4 battery fuses (to be inserted in the "SWBATT" fuse holders)

INSTALLING THE UPS AND THE BATTERY BOX

When installing the equipment, the following points should be considered:

- The wheels are to be used exclusively for fine positioning, and thus for small distances only.
- The plastic parts and the door are not to be used for gripping or pushing the UPS.
- Sufficient space should be left in front of the equipment for it to be turned on/off and maintenance operations to be performed on it (≥ 1.5 mt)
- The rear part of the UPS should be set at least 30 cm from the wall, to enable the air blown by the ventilation fans to flow away correctly
- No objects should be left on its top surface

Having set the equipment in position, secure it by engaging the brake rod (see "Front Views of the UPS" point 8) situated below the connecting terminals.

STEPS TO BE TAKEN TO GAIN ACCESS TO THE TERMINALS OF THE UPS / BATTERY BOX

The operations indicated below are to be performed with the UPS disconnected from the mains powers, turned off and with all the switches and fuse holders of the equipment open.

Follow the instructions provided below to open the UPS:

- Open the door by pressing on the top right-hand area of the door
- Remove the terminal and switches cover (see "Front Views of the UPS" ref. 7)

Having completed the installation operations inside the equipment, replace the terminal cover and close the door.

ELECTRICAL CONNECTIONS

WARNING: a 4-wire three-phase distribution system is required for the three-phase input connection.
The standard version of the UPS must be connected to a TT, TN or IT type 3-phase power line + neutral + protective earth (PE), in compliance with the IEC 60364-3 specification; therefore phase rotation must be respected.
Optional TRANSFORMER BOXES are available to convert the distribution system from 3 to 4-wires.

DIAGRAMS OF CONNECTIONS TO THE ELECTRICAL SYSTEM

NOTE: *for the following diagrams, in cases of single-phase connections on the input line, instead of 3P=N, please read P+N.*

UPS with no variation of the neutral arrangements

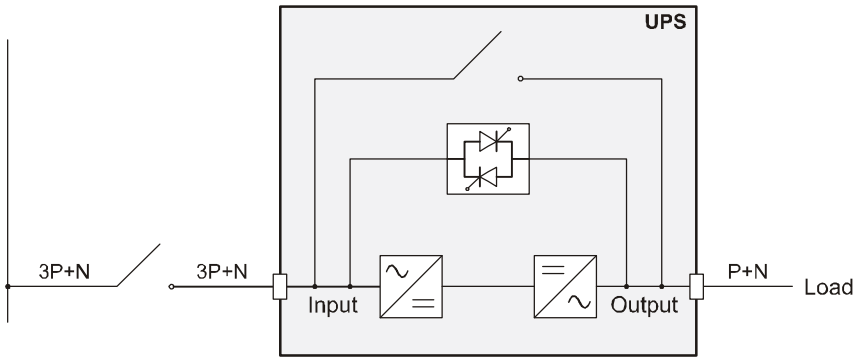

UPS with galvanic isolation on input

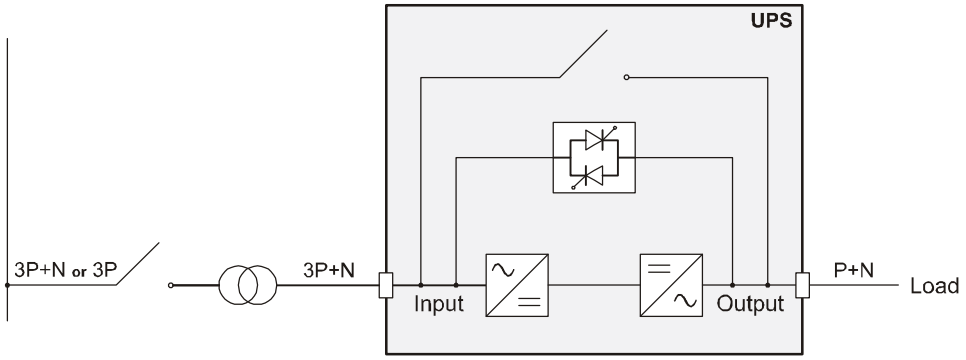

Note: For three-phase connections, the transformer must be suitably sized to operate off the bypass

UPS with galvanic isolation on output

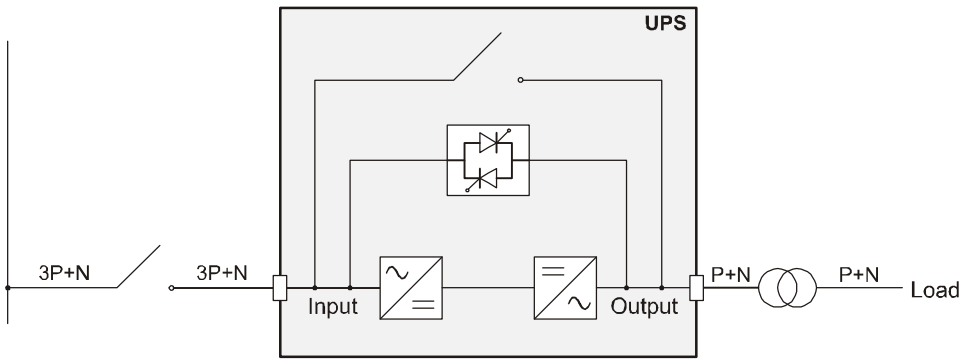

UPS without any variation in neutral condition and with separate bypass input

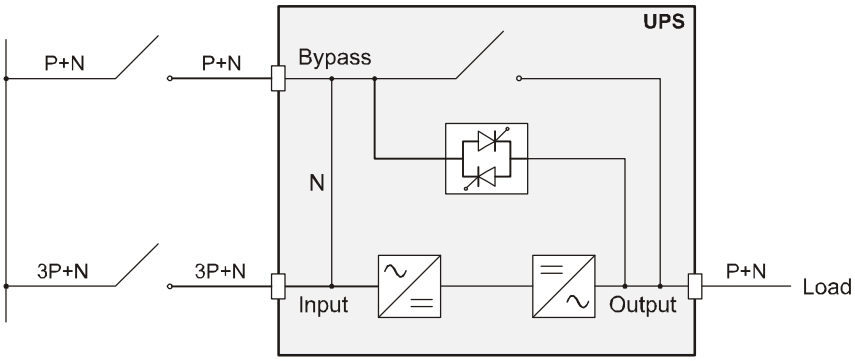

UPS with galvanic isolation and with separate bypass input

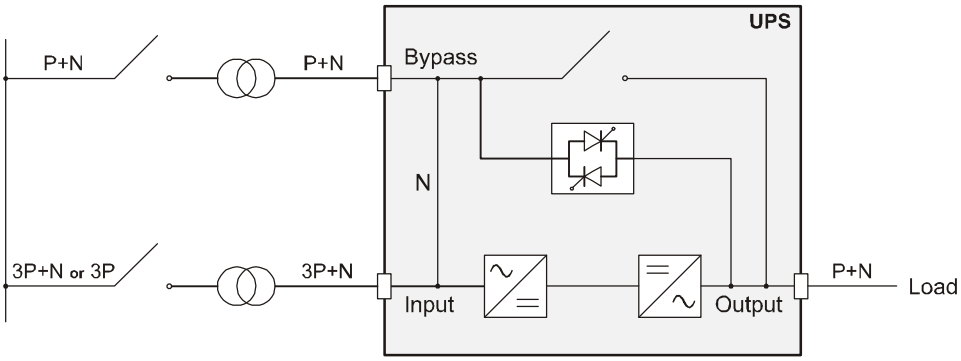

UPS with galvanic isolation at output and separate bypass input

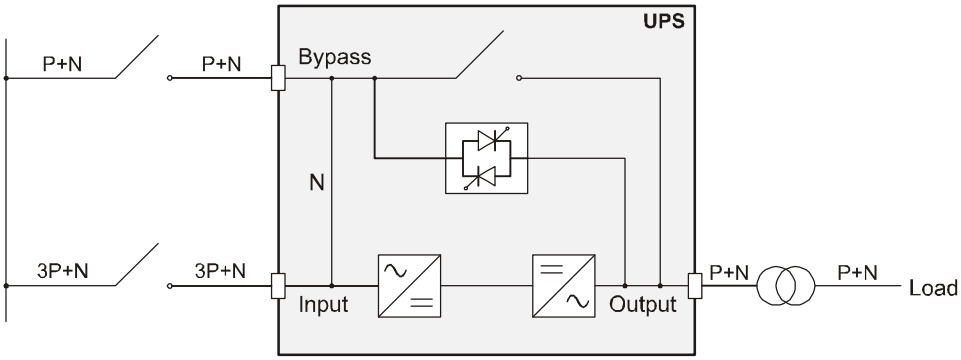

Separate bypass:
if the separate bypass option is present, protective devices must be present on both the main power supply line and the bypass line.
Note: the neutral of the input line and that of the bypass are commoned inside the equipment, so they must refer to the same potential. If the two power supplies were different, an isolation transformer would have to be used on one of the inputs.

UPS without any variation in neutral condition and with separate bypass input connected to independent power supply line

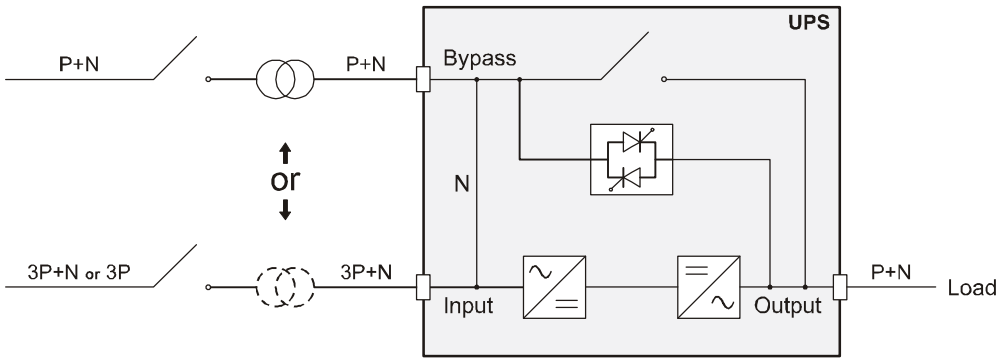

UPS with separate bypass input on independent power supply line and with galvanic isolation at input

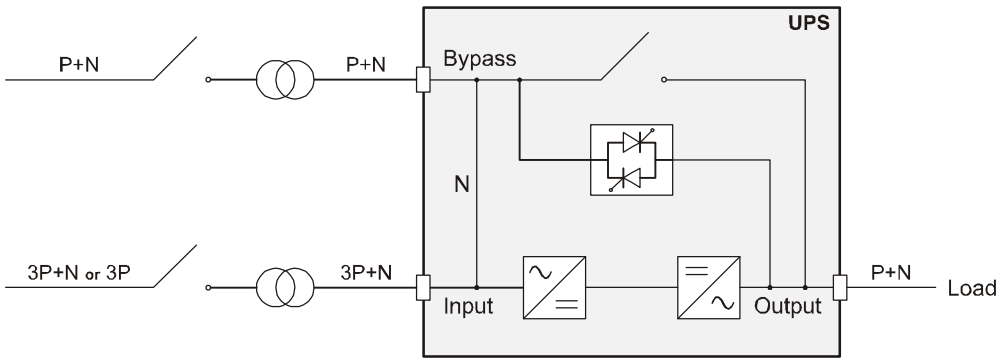

UPS with separate bypass input connected to independent power supply line and with galvanic isolation at output

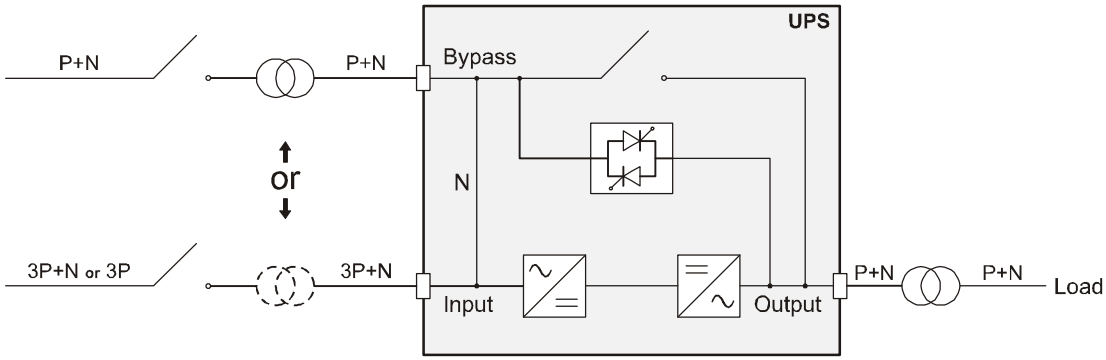

PROTECTIONS INSIDE THE UPS

The following table shows the sizes of the disconnecting switches on the UPS system as well as the sizes of the battery fuses (SWBATT); these devices can be accessed from the front of the UPS.
The table also provides details on the internal fuses (not accessible) used to protect the input and output lines, and the maximum input and nominal output currents. Please refer to the block diagrams in the "USAGE" section of the "Description paragraph for the position of the fuses.
Fuses must be replaced with fuses of the same rating and with the same characteristics as indicated in the table.

	Disconnecting switches and Internal protections						
UPS Model	Non automatic switches		Battery fuse	Current			
[kVA]	UPS Input	UPS Output/ Maintenance/Separate Bypass		Input current [A] Max *			Output current [A]
	SWIN	SWOUT / SWMB / SWBYP (optional)	SWBATT	3P+N **		P+N	Nominal
				L1***	L2/L3		
10	63A(4P)	63A(2P)	32A gG 400V (10x38)	49A	18A	55A	45A
12	63A(4P)	63A(2P)	32A gG 400V (10x38)	59A	21A	64A	55A
15	100A(4P)	100A(2P)	50A gG 400V (14x51)	72A	25A	76A	68A
20	100A(4P)	100A(2P)	50A gG 400V (14x51)	95A	33A	98A	91A

* *The maximum input current refers to a nominal load (PF = 0,8) and to an input voltage of 346V (200V for single-phase connections), and with the battery charger under charge at 4A.*

** *On versions with additional internal battery chargers (optional), the maximum input current on lines L2 and L3 should be increased to 7A.*

*** *When operating off the bypass with a three-phase connection, all the output current is applied to L1 and Neutral.*

SHORT-CIRCUIT

In the event of a fault on the load, in order to protect itself the UPS limits the value and the duration of the power supplied (short circuit current). These values also depend on the operating status of the unit at the time of the fault, which is either:

- UPS in NORMAL MODE: the load is instantly switched over to the bypass line ($I^2t=25000A^2s$): the input line is connected to the output without any internal protection and shuts down after t>0.5s
- UPS in BATTERY MODE: the UPS protects itself by supplying output current of around 1.5 times the nominal current for 0.5s and then shuts down.

BACKFEED

The UPS is also protected internally against backfeed through metal separation devices.
An optional relay output card is available to ensure the control of a release device to be installed upstream of the UPS.

The UPS has an internal device (redundant bypass power supply) which in the event of a fault automatically activates the bypass while ensuring power to the load without any internal protection and without any limit on the power supplied to the load.
In these emergency conditions, any disturbance on the input line will have repercussions on the charge.
Please also refer to the "Usage" section of the paragraph entitled "Redundant auxiliary power supply for automatic bypass".

EXTERNAL PROTECTION DEVICES

MAGNETOTHERMAL SWITCH

As outlined above, the UPS has devices to protect against faults on the output and internal faults.
To set up the power line install a magneto-thermal switch upstream of the UPS with intervention curve C in compliance with the EN 60947 specification, following the indications given in the following table:

	Automatic external protections		
UPS Model	Mains input		Separate bypass input (P+N)
	Single-phase input (P+N)	Three-phase input (3P+N)	
Standard Ups 10 – 12 – 15 – 20 kVA	100A	100A	N.D.
Ups with separate bypass 15 – 20 kVA	100A	63A	100A
Ups with separate bypass 10 – 12 kVA	63A	40A	100A

If the protection device upstream of the UPS interrupts the neutral conductor, at the same time it must also interrupt all the phase conductors (quadri-polar switch).

Output protection (recommended selectivity values)	
Normal fuses (GI)	In (Nominal current)/7
Normal switches (C Curve)	In (Nominal current)/7
Ultra rapid fuses (GF)	In (Nominal current)/2

DIFFERENTIAL

In the standard version, the neutral from the mains power is connected to the UPS output neutral and the neutral settings of the installation remain unchanged.

THE INPUT NEUTRAL IS CONNECTED TO THE OUTPUT NEUTRAL
THE DISTRIBUTION SYSTEM THAT POWERS THE UPS IS NOT CHANGED BY THE UPS

The neutral settings are changed only if an isolation transformer is installed or when the UPS operates with a differential switch located upstream.
Make sure that the input neutral is connected correctly, because errors could damage the UPS

When operating from mains power, a differential switch located at the input intervenes so that the output circuit is not isolated from the input circuit.
Extra differential switches can always be inserted at the output, and where possible, co-ordinated with the differential switches at the input.
The differential switch upstream of the UPS must have the following features:

- Differential current adjusted to the UPS load value; an adequate margin should be kept to avoid delayed interventions (recommended value: 100mA min. - 300mA)
- type B or type A
- delay greater than or equal to 0.1s

CABLE SIZES

The manufacturer recommends that the INPUT/OUTPUT and BATTERY cables pass under the UPS unit.
Please refer to the following table for the minimum cross-sections to be used for the input and output cables.

	Cable sizes (mm^2) *									
	INPUT mains / separate bypass (optional)				OUTPUT			BATTERY** (optional)		
kVA	PE	L1	L2/L3	N	PE	L	N	PE	+/-	N
10	10	10	2.5	10	10	10	10	4	4	4
12	16	16	4	16	16	16	16	6	6	6
15	16	16	4	16	16	16	16	6	6	6
20	25	25	6	25	25	25	25	10	10	10

* *The cross-sections indicated in the table refer to a maximum cable length of 10 metres.*

** *The maximum length of the cables for connection to the optional Battery Box is 3 metres.*

Note: the maximum cable size that can be inserted in the INPUT, BYPASS and OUTPUT terminal boards is 25mm^2 for cables with cable lugs and 35mm^2 for rigid cables.
The maximum section for cables that can be inserted in the BATT terminal board is 10 mm^2 for cables with cable lugs and 16 mm^2 for stripped cables.

CONNECTIONS

The very first connection must be the protection conductor or the earth cable which should be inserted in the terminal marked PE. The UPS must be earthed before use.

Connect the input and output cables to the terminal board as shown in the figure below.

THE INPUT NEUTRAL MUST ALWAYS BE CONNECTED
DO NOT CONNECT THE OUTPUT NEUTRAL TO THE INPUT NEUTRAL

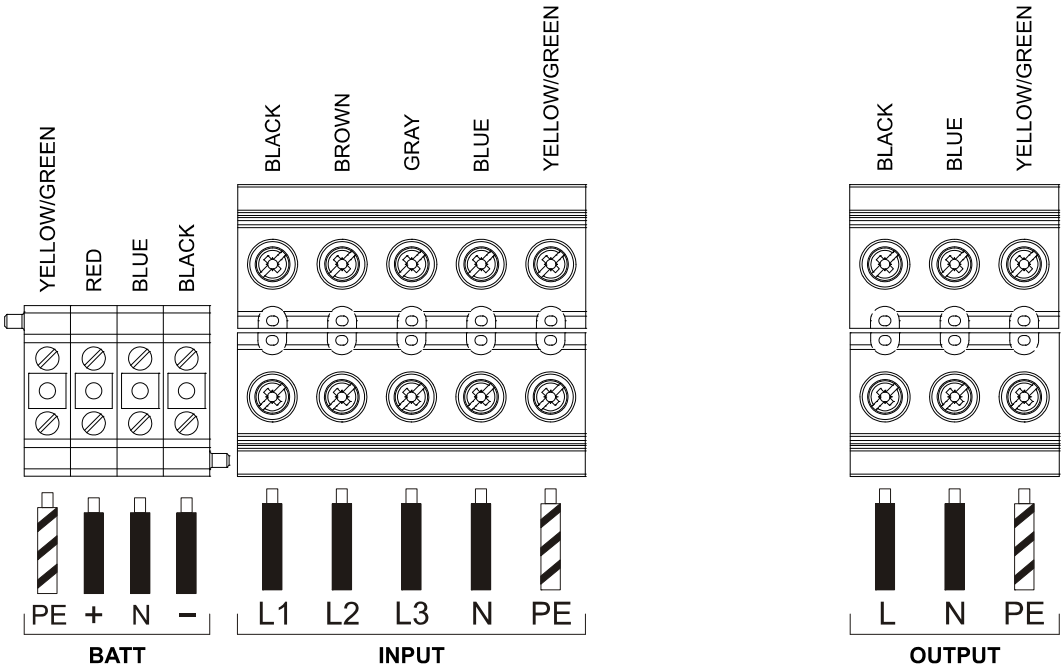

Note: connections to the BATTERY module are only required when the optional Battery Box is present.

CONNECTIONS FOR THE MODEL WITH SEPARATE BYPASS

The very first connection must be the protection conductor or the earth cable which should be inserted in the terminal marked PE. The UPS must be earthed before use.

Connect the input and output cables to the terminal board as shown in the figure below:

THE INPUT AND BYPASS NEUTRAL MUST ALWAYS BE CONNECTED.
THE INPUT AND BYPASS LINES MUST REFER TO THE SAME NEUTRAL POTENTIAL.
DO NOT CONNECT THE OUTPUT NEUTRAL TO THE INPUT OR BYPASS NEUTRAL.

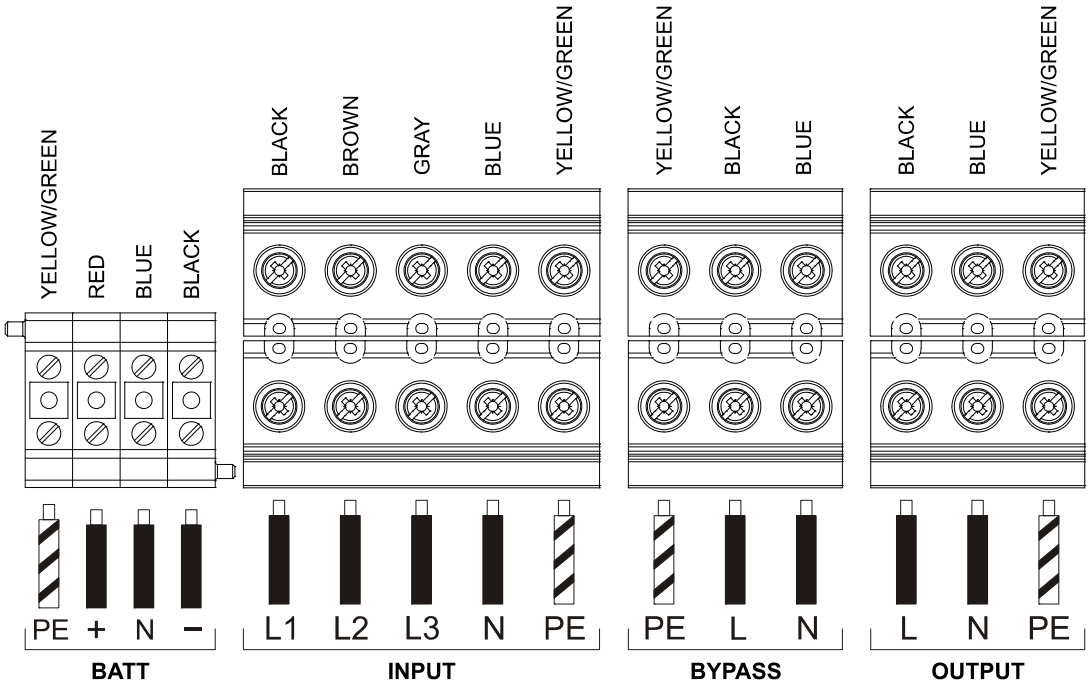

Note: connections to the BATTERY module are only required when the optional Battery Box is present.

CONNECTION OF UPS SINGLE-PHASE INPUT

The very first connection must be the protection conductor or the earth cable which should be inserted in the terminal marked PE. The UPS must be earthed before use

Apply the short circuit to the three input bushings (**see "View of UPS connections", point 6**) using the bar and the three screws provided in the supplies box as shown in the left hand figure below. Then connect the phase cable to L1 as indicated in the figure below right.

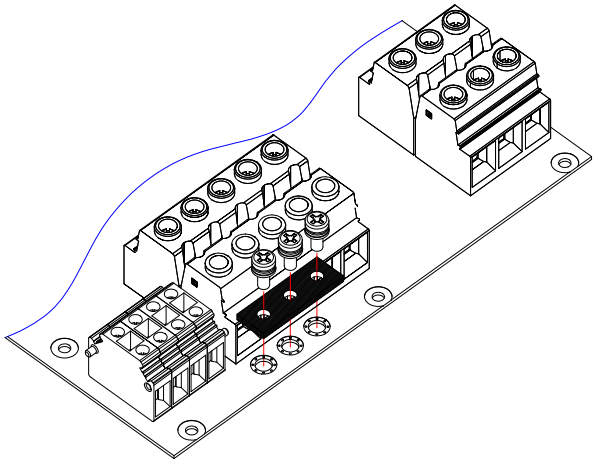

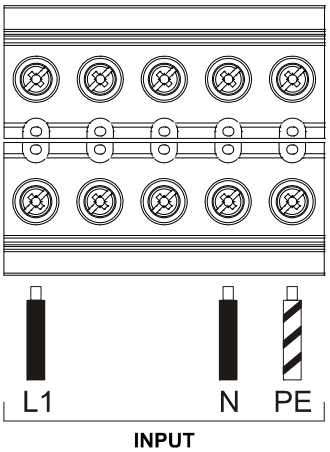

Note: the connections to the UPS terminals remain unchanged with respect to those indicated in the foregoing paragraphs.

R.E.P.O. (REMOTE EMERGENCY POWER OFF)

This isolated input is used to turn off the UPS remotely in case of emergency.
The UPS is supplied from the factory with the “Remote Emergency Power Off” (R.E.P.O.) terminals short-circuited (**see "View of the UPS connections"**). If it is to be installed, remove the short-circuit and connect to the normally closed contact of the stop device using a cable that provides a double isolation connection.
In case of emergency, by activating the stop device, the R.E.P.O. control is opened and the UPS enters stand-by mode (see “USE” section), and powers off the load completely.

The R.E.P.O. circuit is self-powered with SELV type circuits. No external power supply voltage is therefore required. When it is closed (normal condition), a maximum current of 15mA is present.

EXTERNAL SYNC

This non-isolated input is used to synchronise the inverter output with an appropriate signal coming from an external source.
For the installation:

- use an isolation transformer with an isolated single-phase output (SELV) comprised in the range 12-24Vac with ≥ 0.5VA power
- connect the transformer secondary to the "EXTERNAL SYNC" terminal (**see "View of UPS connections", point 4**) using a double isolation cable with a 1mm^2 cross-section. Make sure to respect the polarisation as in the figure below.

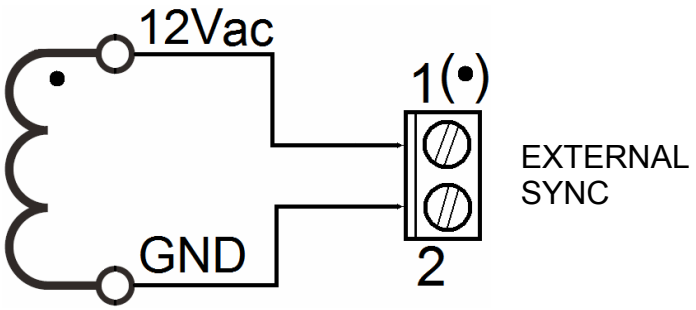

After installation, activate the command using the advanced configuration software UPSTools provided on the CD-ROM shipped with the UPS system.

CONNECTION OF THE REMOTE MAINTENANCE BYPASS

An additional maintenance bypass can be installed on a peripheral electric control panel, for example to replace the UPS without interrupting power to the load.

It is essential to connect the SERVICE BYPASS terminal (*see "View of UPS connections", point 2) to the auxiliary contact of the SERVICE BYPASS switch. Closing the SERVICE BYPASS switch (4), will open this auxiliary contact which signals the insertion of the maintenance bypass to the UPS. *Absence of this connection could interrupt the power to the load and cause damage to the UPS.

NOTE: use cables with a cross-section compliant with the indications given in the "Cable Sizes" section.
Use 1mm^2 cables with double isolation to connect the SERVICE BYPASS terminal to the auxiliary contact of the remote maintenance bypass disconnecting switch.

If the UPS is fitted with an internal isolation transformer, ensure compatibility between the remote maintenance bypass and the neutral arrangements.

DIAGRAM SHOWING REMOTE INSTALLATION OF THE MAINTENANCE BYPASS ON THE THREE PHASE – SINGLE PHASE MODEL

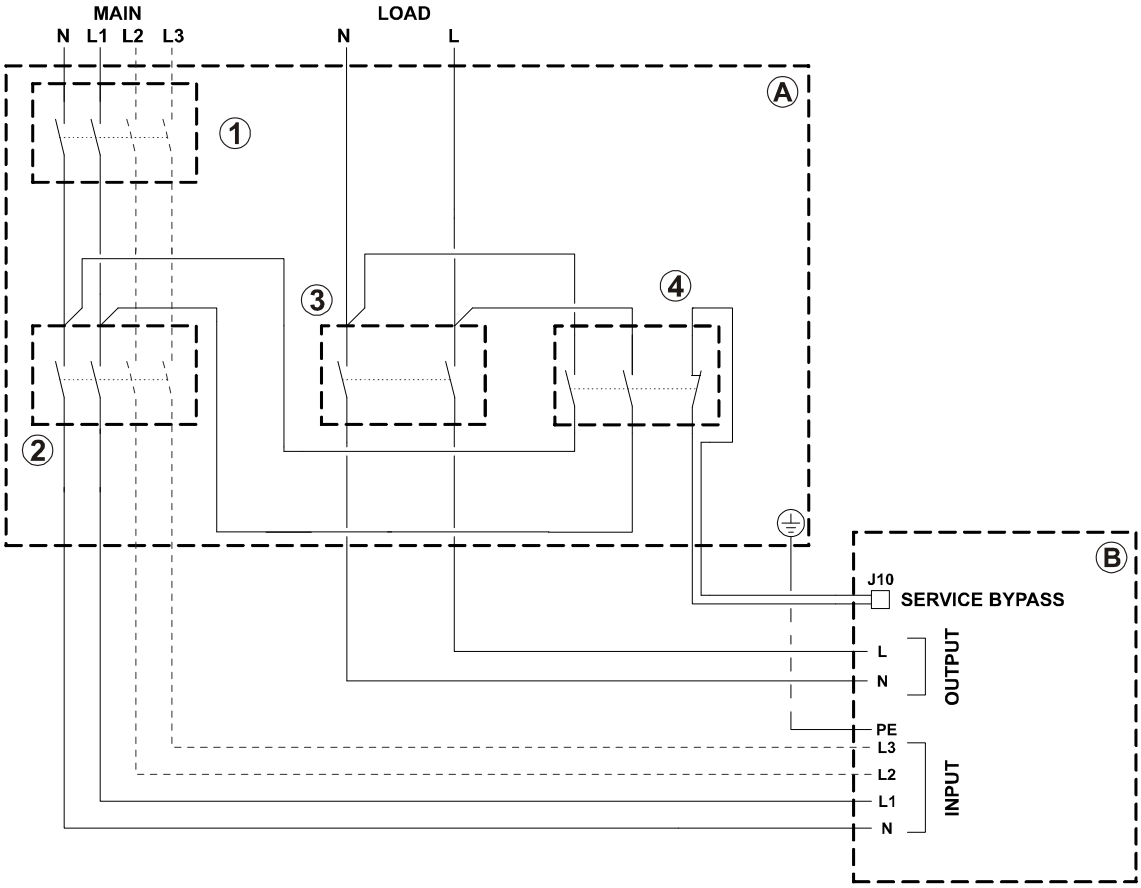

(A) Peripheral electric control panel

(B) UPS internal connections

(1) LINE switch: magneto-thermal switch compliant with the indications given in the "External Protection Devices" section.
NOTE: For installation with single phase input, use a bi-polar magneto-thermal switch.

(2) INPUT switch: disconnecting switch compliant with the indications given in the "UPS Internal Protections" section.
NOTE: For installation with single phase input, use a bi-polar disconnecting switch.

(3) OUTPUT switch: disconnecting switch compliant with the indications given in the "UPS Internal Protections" section.

(4) SERVICE BYPASS switch: disconnecting switch compliant with the indications given in the "UPS Internal Protections" section, complete with auxiliary contact that is normally closed.

DIAGRAM SHOWING REMOTE INSTALLATION OF THE MAINTENANCE BYPASS ON THE THREE PHASE – SINGLE PHASE MODEL WITH SEPARATE BYPASS

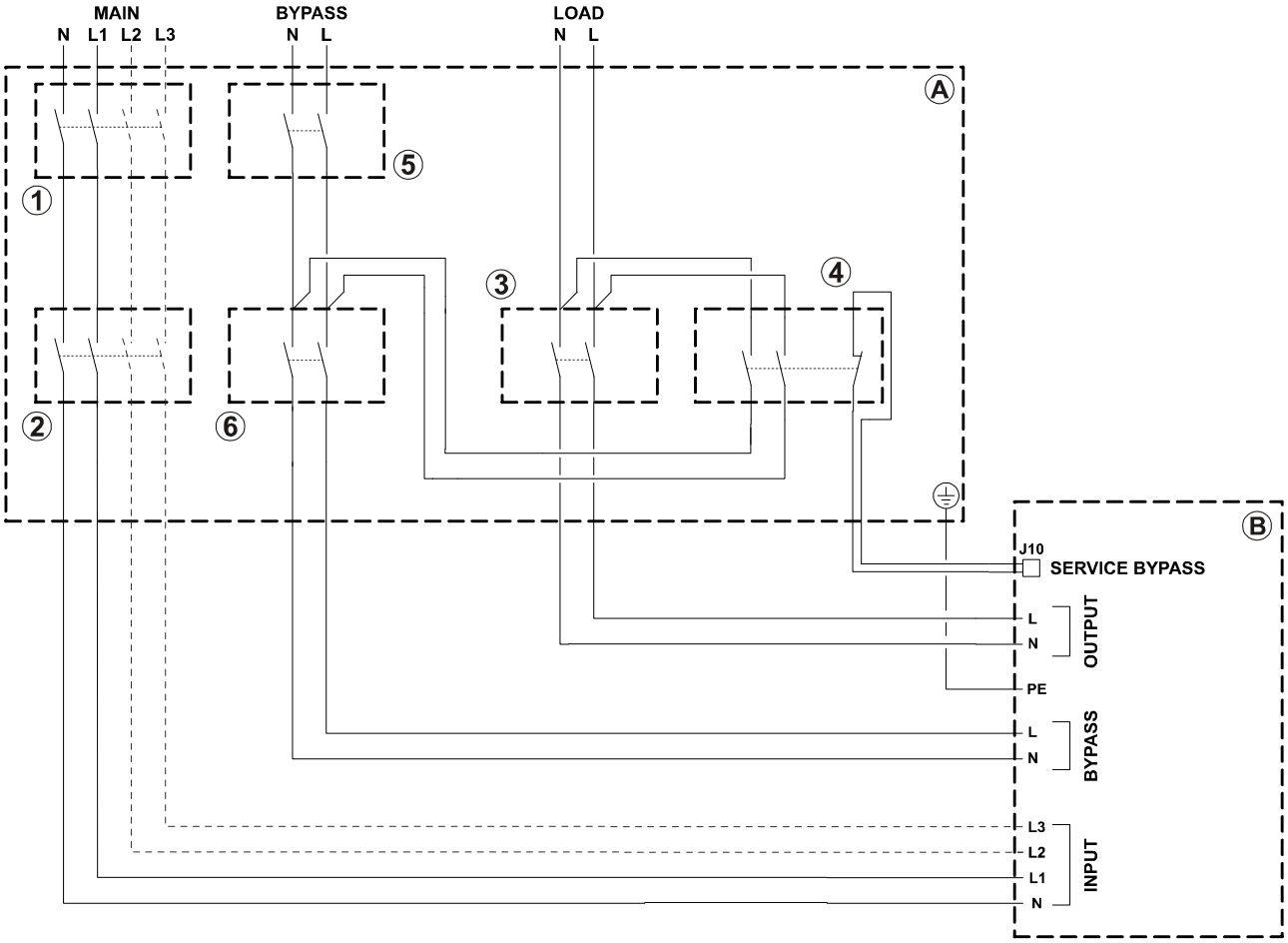

Ⓐ Peripheral electric control panel

Ⓑ UPS internal connections

① LINE switch: magneto-thermal switch compliant with the indications given in the “External Protection Devices” section.
NOTE: For installation with single phase input, use a bi-polar magneto-thermal switch

② INPUT switch: switch compliant with the indications given in the “UPS Internal Protections” section.
NOTE: For installation with single phase input, use a bi-polar disconnecting switch

③ OUTPUT switch: switch compliant with the indications given in the “UPS Internal Protections” section.

④ SERVICE BYPASS switch: disconnecting switch compliant with the indications given in the “UPS Internal Protections” section, complete with auxiliary contact that is normally closed

⑤ LINE BYPASS switch: magneto-thermal switch compliant with the indications given in the “UPS External protection devices” section

⑥ BYPASS INPUT switch: switch compliant with the indications given in “UPS Internal Protections” section

CONNECTING THE BATTERY BOX TO THE UPS

THE CONNECTION BETWEEN THE UPS AND THE BATTERY BOX MUST BE MADE WITH THE DEVICES POWERED OFF AND UNPLUGGED FROM THE MAINS

UPS POWER-OFF PROCEDURE:

- Turn off all devices connected to the UPS or use the remote bypass option (if installed).
- Turn off the UPS following the relevant power-off procedure (see the “USE” section of the “Powering off the UPS” paragraph).
- Open all the isolators and fuse holders present in the UPS.
- Isolate the UPS completely from the electricity network by opening all the external protective devices situated on the input and output lines
- Wait a few minutes before proceeding to work on the UPS.
- Remove the terminal cover of the UPS (see "Opening the UPS and the Battery Box").

CONNECTING THE BATTERY BOX:

- Check that the battery voltage of the Battery Box corresponds to that allowed by the UPS (check the data plate on the Battery Box and the manual of the UPS)
- **IMPORTANT:** make sure that the SWBATT fuse holders of the UPS and the Battery Box are open.
- Remove the terminal cover of the Battery Box (see "Opening the UPS and the Battery Box").
- Connect the earth terminals of the UPS and the Battery Box using the yellow/green wire of the cable provided.
- Connect the terminals to the UPS and the Battery Box:
  - terminals marked with the **+** symbol with the red cable
  - terminals marked with the **N** symbol with the blue cable
  - terminals marked with the **–** symbol with the black cable

  respecting the correspondence indicated by the symbols print on the terminal cover of the Battery Box and the UPS.
- Reposition the terminal covers removed previously.

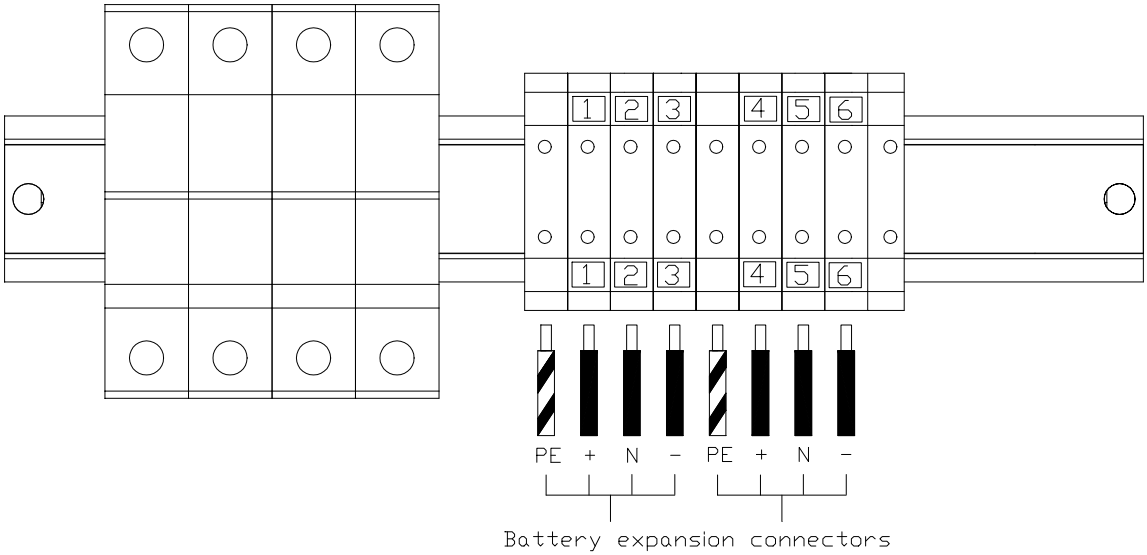

CHECKING INSTALLATION:

- Insert the fuses in the SWBATT fuse holders of the Battery Box.
- Close the SWBATT fuse holders of the Battery Box and the UPS.
- Carry out the UPS power-on procedure described in this manual.
- After about 30 sec., check that the UPS is working properly: simulate a black-out by opening the SWIN input isolator of the UPS. The load must continue to be powered, the “battery power” LED must light up on the control panel of the UPS, and the latter will emit a beep at regular intervals. When the SWIN input isolator is closed again, the UPS must resume operation on mains power.

MULTIPLE EXPANSIONS

Several Battery Boxes can be connected in a cascade to ensure prolonged autonomy. The connections should be made as shown here below:

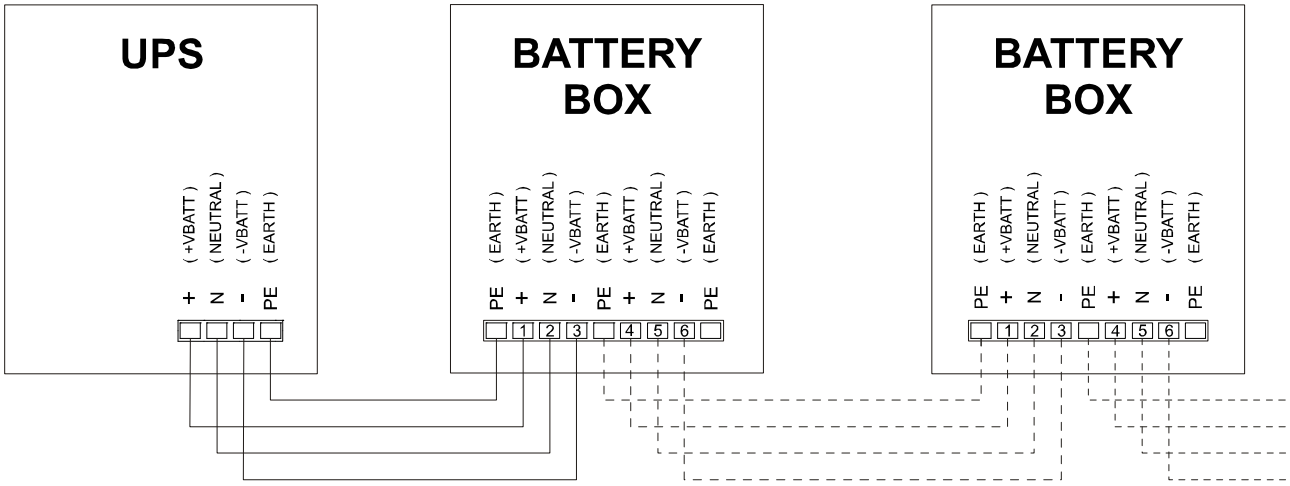

<u>WARNING (only for single UPS)</u>: No more than one UPS may be connected to each Battery Box or to more than one Battery Box connected in a cascade.

SETTING THE RATED BATTERY CAPACITY – SOFTWARE CONFIGURATION

Having installed one or more BATTERY BOXES, the UPS must be set up to update the rated capacity value (total Ah of batteries inside the UPS + external batteries).
This setting should be made using the advanced configuration software *UPSTools*, present on the CD-ROM provided with the UPS or directly from the control panel of the UPS.

Installing and running *UPSTools*:

- Follow the installation and operating instructions given in the software manual present in the *UPSTools* folder of the CD-ROM.

Making the setting from the display

Set the rated battery capacity following the indications given in the “USE” chapter.

EXTERNAL TEMPERATURE PROBE

This **<u>NON ISOLATED</u>** input may be used to measure the temperature inside a remote Battery Box.

The special kit provided by the manufacturers must be used: any methods not conforming to specifications may cause faults or breakdowns in the equipment.

To install, connect the cable included in the special kit to the "EXT BATTERY TEMP PROBE" connector (see "View of the UPS Connections" ref. 3).
After installation, enable the external temperature measuring function using the advanced configuration software *UPSTools* present on the CD-ROM provided with the UPS.

USE

DESCRIPTION

The purpose of a UPS is to ensure a perfect power supply voltage for the devices connected to it irrespective of whether mains power is present or not. Once connected and powered, the UPS generates a sinusoidal alternating voltage with a stable amplitude and frequency, irrespective of the changes and/or variations occurring on the electricity network. For as long as the UPS receives energy from the mains, the batteries are kept charged under the control of the multiprocessor board. This board also controls continuously the amplitude and frequency of the mains voltage, the amplitude and frequency of the voltage generated by the inverter, the load applied, the internal temperature and the state of efficiency of the batteries.

The block diagram below shows each of the parts that make up the UPS.

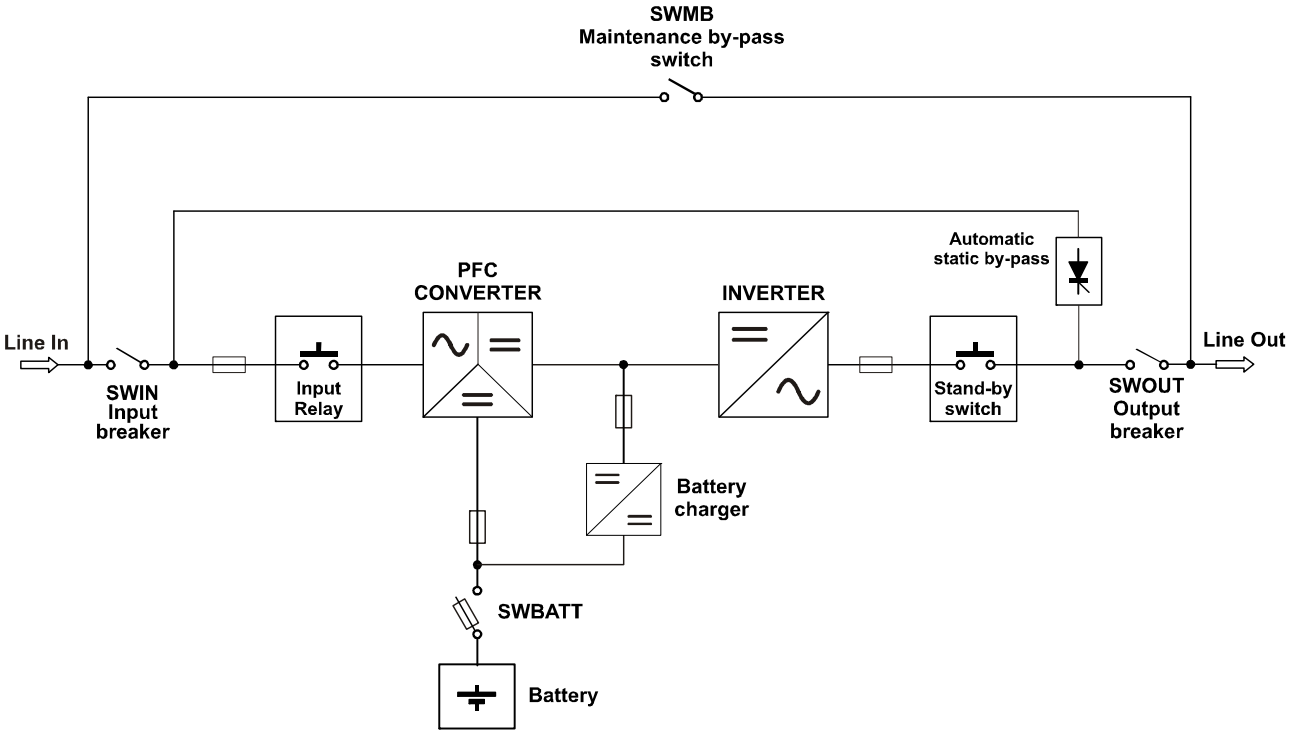

Block diagram of the UPS

IMPORTANT: Our UPS are designed and produced for long life even under the severest conditions. Remember however that they are electrical power equipment items and as such are in need of periodic checks. Besides, some components have a life cycle of their own and must therefore be checked at regular intervals and may need to be replaced, where due to the conditions: in particular, the batteries, fans and in some cases the electrolytic capacitors.
It is recommended to implement a preventive maintenance program, using manufacturer authorised and trained service personnel.
Our Technical Servicing department is at your disposal to discuss the different personalized preventive maintenance options with you.

PRELIMINARY OPERATIONS

- **Visual check of the connection**
  Check that all the connections have been made strictly following the indications given in the "Connections" paragraph.
  Check that the "1/0" button is in its "0" position (see "Front Views of the UPS" point 5).
  Check that all the isolators are open.

- **Close the battery fuse holders**
  Close the 4 battery fuse holders (SWBATT) present in the position indicated in the figure below.

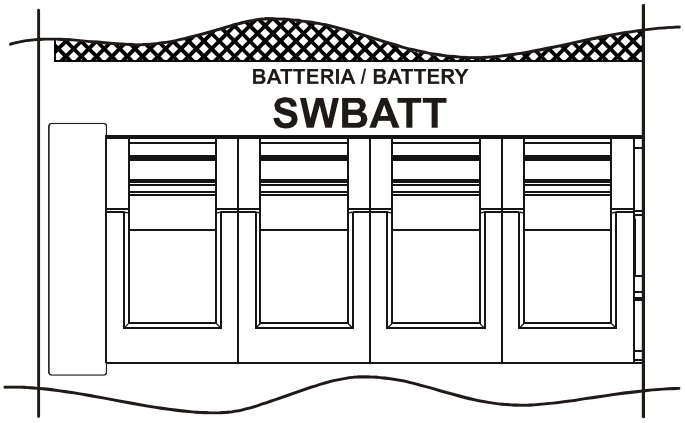

WARNING: if a battery expansion (Battery Box) has been installed incorrectly (by not following the information as provided in the "Connecting the Battery Box to the UPS" paragraph) this can lead to the battery fuses becoming damaged. If this happens, contact the customer services department immediately to avoid further damage to the UPS. Note: - When the fuses are closed, small arc flashes may occur due to the charge of the capacitors present inside the UPS. This is normal and does not cause faults and/or damage.

- **Power on the UPS**
  Close the protective devices upstream from the UPS.

- **Close the input and output isolators**
  Close all the input (SWIN) and output (SWOUT) isolators except for the maintenance isolator (SWMB), which is to remain open.
  Note: <u>if the separate bypass option is present, close also the bypass isolator (SWBY)</u>.

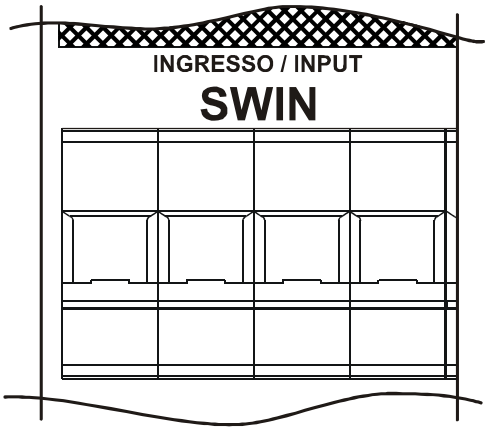

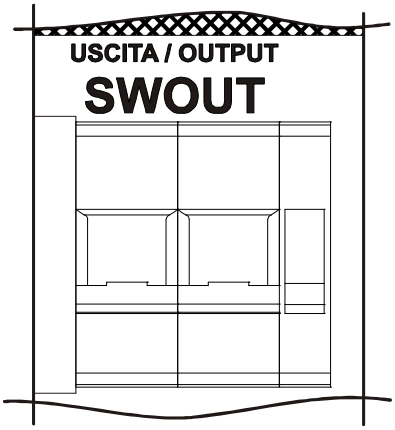

POWERING ON FOR THE FIRST TIME

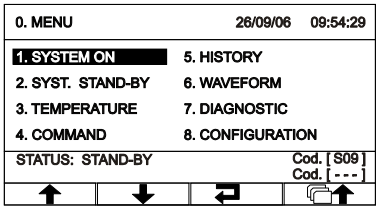

- Set the "1/0" button to "1" and wait for a few seconds. Check that the display is turned on and the UPS enters "STAND-BY" mode.

Check that no error messages appear indicating that the input cables do not respect the correct cyclic phase sense (for three-phase input only). If error messages appear, perform the following operations:

- Turn off the UPS by setting the "1/0" button to "0" and check that the display is turned off
- Open all the isolators and fuse holders
- Open all the protective devices upstream from the UPS
- Remove the panel covering the input terminal board
- Correct the position of the input wires so that the phase direction is respected.
  only if the separate bypass option is present: check which terminal board (input and/or bypass) the error code shown on the display corresponds to (see the “Alarm Codes” paragraph); correct the position of the wires of the terminal board indicated so that the phase direction is respected
- Close the panel again
- Repeat the power-on operations including the "preliminary operations"

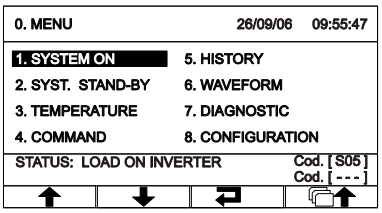

- Press the ↵ button to access the power-on menu. When prompted to confirm, select “YES”, press ↵ to confirm and wait for a few seconds. Check that the UPS enters "ON LINE" mode and that the load is powered correctly.

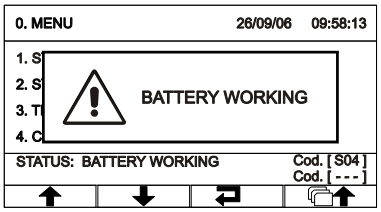

- Open the input isolator (SWIN) and wait for a few seconds. Check that the UPS enters "BATTERY POWER" mode and that the load is still powered correctly. You should hear a beep once about every 7 seconds.

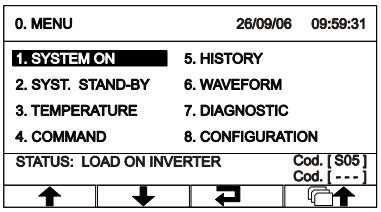

- Close the input isolator (SWIN) and wait for a few seconds. Check that the UPS enters "ON LINE" mode and that the load is still powered correctly.

POWERING ON FROM THE MAINS

- Set the “1/0” switch behind the door of the UPS in its “1” position.
  After a few moments, the UPS is turned on, the capacitors are precharged and the "Lock / stand-by" LED blinks: The UPS is in stand-by mode.
- Press the ↵ button to access the power-on menu. When prompted to confirm, select “YES” and press the ↵ button again. All the LEDs around the display light up for about 1 sec. and a beep is emitted. The display shows the word “POWER ON” to indicate the start of the power-on sequence at the end of which the UPS will enter “ON LINE” mode.

POWERING ON FROM THE BATTERY

- Set the “1/0” switch behind the door of the UPS in its “1” position.
- Keep the “Cold Start” button (situated behind the door) pressed for about 5 sec. The UPS will be started and the display turned on.
- Press the ↵ button to gain access to the power-on menu. When prompted to confirm, select “YES” and press the ↵ again. All the LEDs around the display light up for about 1 sec. and the buzzer starts to beep once about every 7 seconds.

Note: if the sequence described above is not executed within 1 min., the UPS turns itself off to avoid discharging the batteries unnecessarily.

POWERING OFF THE UPS

From the main menu, select the “SYSTEM STBY” item and press ↵ to gain access to the submenu and press it again to confirm the operation. To turn the UPS off altogether, set the “1/0” switch in its “0” position.

***Note**: during long idle periods, we recommend the UPS be turned off at the “1/0” switch and that all isolators be opened.*

GRAPHIC DISPLAY

At the centre of the control panel there is a large graphic display, which provides, in the foreground and in real time, a detailed overview of the current status of the UPS. Directly from the control panel you can turn the UPS on/off, view the electrical values of the mains, output, battery, etc.,[1] and make the main machine settings.
The display is divided into four main areas, each with its own specific function.

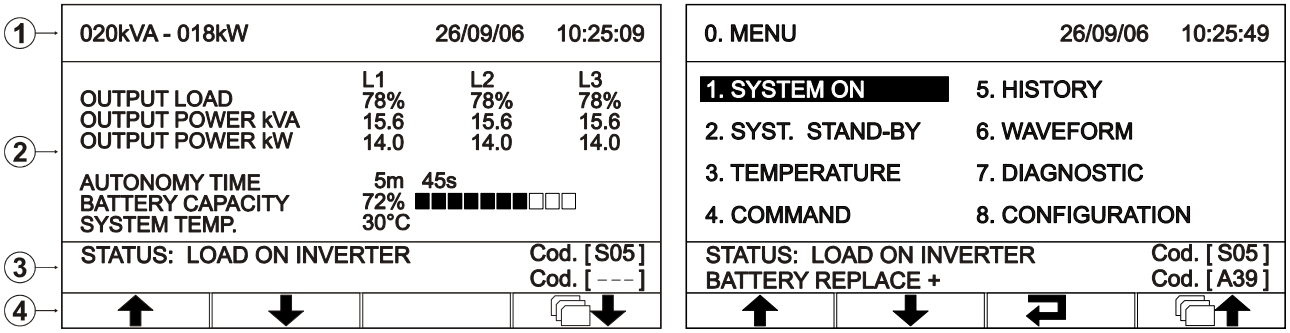

Sample screens of the graphic display
(screens are only indicative, the data shown may not reflect the actual situation)

1	**GENERAL INFORMATION**	Area of the display that shows the date and time permanently, and, depending on the screen, the model of the machine or the title of the menu currently active.
2	**VIEW DATA / BROWSE MENUS**	Main area of the display used to view the UPS measurements (updated constantly in real time), and to access the various menus that may be selected by pressing the relevant function keys. Once the desired menu has been selected, this part of the display will show one or more pages containing all the data related to the menu chosen.
3	**UPS STATUS/ ERRORS – FAULTS**	Area indicating the operating status of the UPS. The first line is always active and constantly shows the current status of the UPS; The second is only active when an error and/or fault occurs on the UPS and indicates the type of error/fault that has occurred. On the right, each line indicates the code corresponding to the event in progress.
4	**KEY FUNCTIONS**	Area divided into four boxes, each one corresponding to the function key below it. According to the menu active at that moment, the display shows the function for the corresponding key in the relevant box.

Key Symbols


To gain access to the main menu


To return to the previous menu or screen


To scroll through the various items on a menu or move from one page to another while viewing data


To confirm a selection


To temporarily silence the buzzer (hold down for more than 0.5 sec.).
To cancel a programmed switching-on/off (hold down for more than 2 sec.)

[1] *The precision of the measurements is: 1% for voltage measurements, 3% for current measurements, 0.1% for frequency measurements.*
The indication of the autonomy time left is an ESTIMATE; so it should not be considered to be a perfectly accurate tool.

DISPLAY MENUS

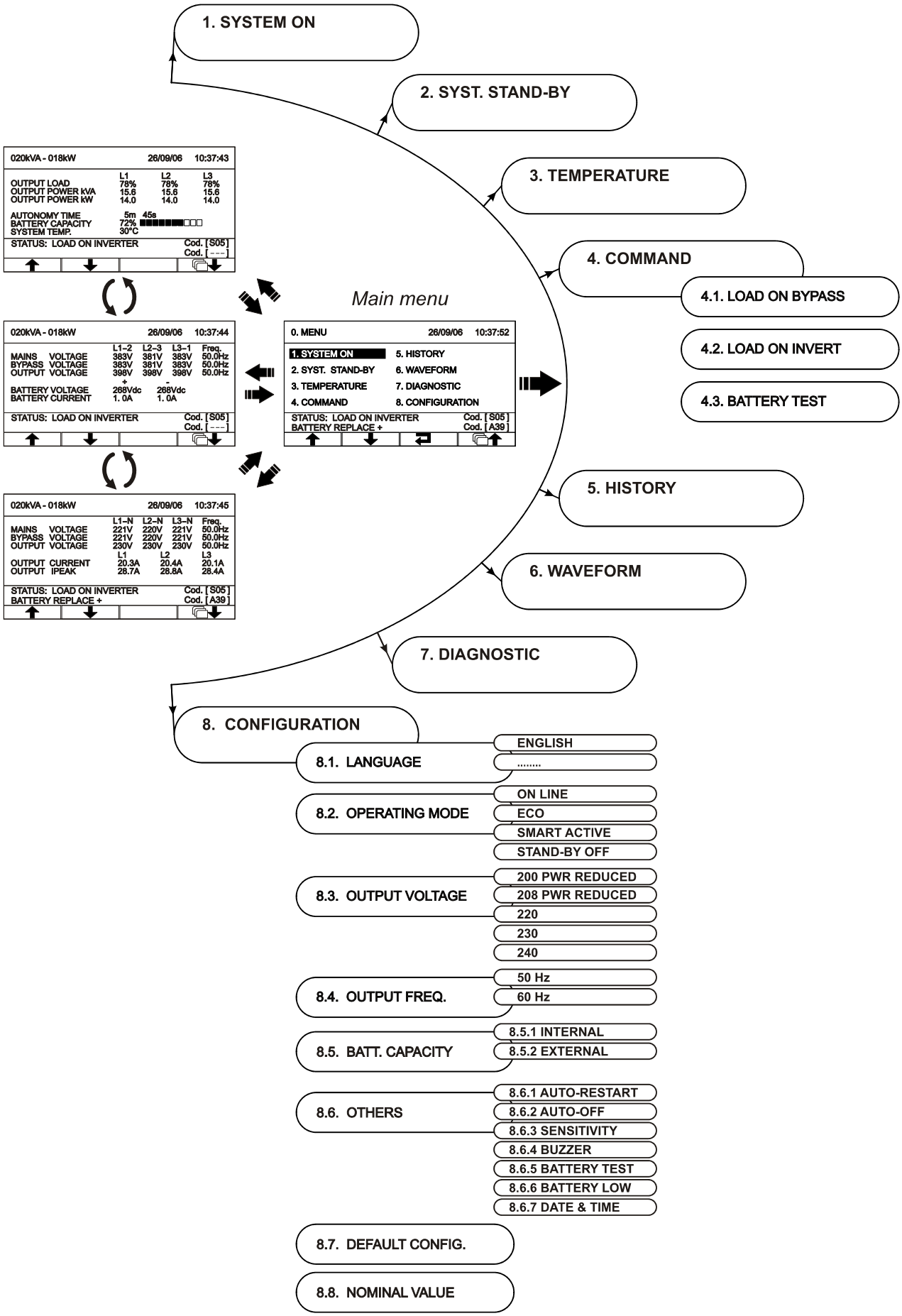

OPERATING MODES

The mode that guarantees maximum protection for the load is ON LINE mode, in which the energy for the load is converted twice and is generated perfectly sinusoidal at the output with the frequency and voltage set by the fine digital control of the DSP irrespective of the input (V.F.I.). *****
In addition to the traditional, double-conversion ON LINE operating mode, the following modes may be selected:

- ECO (LINE INTERACTIVE)
- SMART (SMART ACTIVE)
- STBYOFF (STAND-BY OFF)

In order to optimize efficiency, in ECO mode, the load is normally powered from the bypass. If the mains voltage exceeds the allowed tolerance limits, the UPS switches to normal, double-conversion ON LINE mode. About five minutes after it has returned within the tolerance limits, the load is switched back to bypass.

If you are not sure which operating mode (ON LINE or ECO) to choose, the UPS may be set in SMART ACTIVE mode in which, according to statistical data on the quality of the power supply mains, the UPS autonomously decides the mode it is to enter.

Finally, in STAND-BY OFF mode, the UPS is set to operate only in an emergency:
when the mains power is present, the load is powered off while, in the event of a black-out, the load is powered by the inverter via the batteries, and is then powered off again when mains power is restored. The activation time is less than 0.5 sec.

MAINTENANCE BYPASS (SWMB)

WARNING: Maintenance work inside the UPS is to be performed exclusively by qualified staff. Inside the UPS there may be a voltage present even when the input, output and battery switches are open. Removal of the UPS panels by non-qualified staff may result in injury to the operator and damage the equipment.

Below is a list of the operations to be performed in order to carry out maintenance work on the equipment without shutting off the power supply to the load:

- The UPS must power the load via the automatic bypass or the inverter, with the mains voltage present.
  N.B.: If the UPS is in battery power mode, activating the maintenance bypass entails shutting off the power supply to the load.
- Close the maintenance bypass isolator (SWMB) situated behind the door: in this way, the input is short-circuited with the output.
- Open the input switches (SWIN), output switches (SWOUT) and battery fuse holders (SWBATT) situated behind the door: The signal panel is turned off. Wait for the electrolytic capacitors on the power board to discharge (about 15 minutes) and then proceed to perform the maintenance operations.
  N.B.: During this phase, with a load powered via the maintenance bypass, any disturbance on the power supply line of the UPS will affect the devices powered (The load is connected directly to the mains. The UPS is no longer active).

Having completed the maintenance operations, proceed as follows to restart the UPS:

- Close the input and output isolators, and the battery fuse holders. The signal panel is reactivated. Turn on the UPS again from the “SYSTEM ON” menu. Wait for the sequence to be completed.
- Open the maintenance bypass: the UPS resumes normal operation.

***** The rms value of the output voltage is set by the fine control of the DSP irrespective of the input voltage while the frequency of the output voltage is synchronized (within a tolerance range that may be set by the user) with the input voltage to enable the bypass to be used. Outside this range, the UPS desynchronizes and returns to the rated frequency and the bypass may no longer be used (free running mode).

REDUNDANT AUXILIARY POWER SUPPLY FOR AUTOMATIC BYPASS

The UPS is equipped with a redundant auxiliary power supply that enables the UPS to run on an automatic bypass even when a failure occurs in the main auxiliary power supply. If a fault occurs in the UPS shutting off the main auxiliary power supply, the load is powered by the automatic bypass. The multiprocessor board and the control panel are not powered so the LEDs and the display are off.

PROGRAMMABLE AUXILIARY SOCKET (POWER SHARE)

The UPS has an output socket which enables the automatic disconnection of the load in certain operating conditions. The events that determine the automatic disconnection from the Power share socket can be selected by the user using the UPSTools configuration software (see the sections **Configuration Software** and **UPS Configuration**).
For example, the load can be disconnected after the battery has been operating for a given time, or at the pre-alarm threshold for end of battery charging, or when an overload occurs.

***Safety notes**: when the UPS is switched on, if the output switch (SWOUT) is opened, the Power share socket will remain connected to the mains.*
If the manual bypass switch (SWMB) is inserted, the output switch (SWOUT) is opened and when the UPS is shutdown, the socket will be disconnected.

POWER WALK-IN

The UPS has a Power Walk-in mode which can be enabled and configured using the software *UPS Tools*. When the mode is enabled and mains power is restored after a period of battery operation, the UPS starts to draw progressively from it so as not to stress (due to the peak) any generating set installed upstream. The transient time may be set from 1 to 30 seconds. The default value is 10 seconds. During the transient, the necessary power is drawn in part from the batteries and in part from the mains, maintaining sinusoidal absorption. The battery charger is turned on again once the transient has passed.

REDUCING THE LOAD (TO 200V AND 208V)

If the output voltage is set to 200V and 208V (see “Configuring the UPS” paragraph), the maximum power output of the UPS is reduced with respect to its rated value, as shown in the graph below:

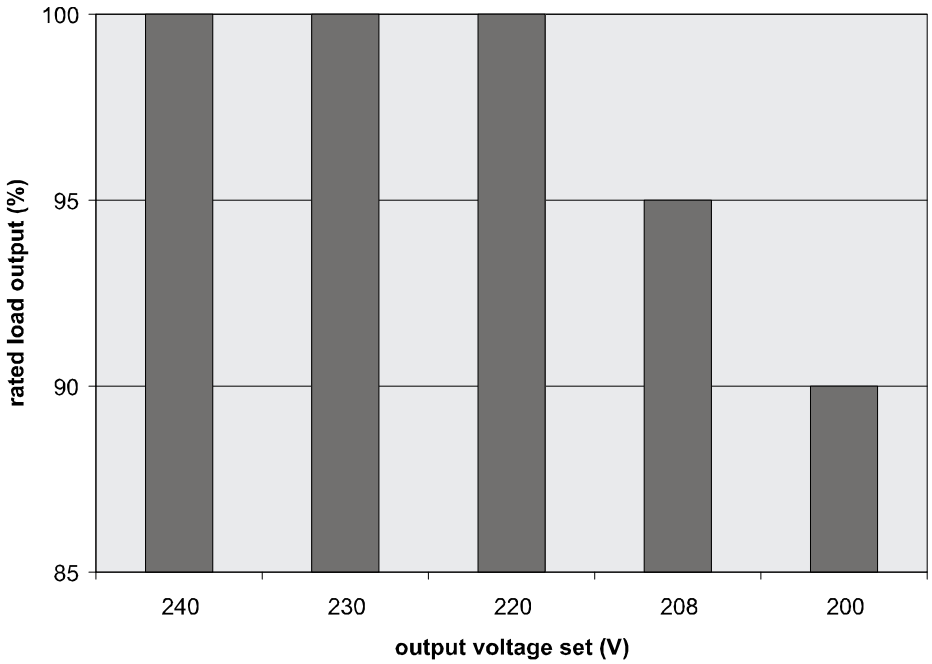

CONFIGURING THE UPS

The table below illustrates all the possible settings at your disposal to tailor the UPS to best satisfy your needs.

CP (Control Panel) = Indicates that the configuration can be changed not only from the configuration software but also from the control panel.

SW (Software) = Indicates that the configuration may only be changed from the configuration software.

FUNCTION	DESCRIPTION	DEFAULT	POSSIBLE SETTINGS	MOD.
Output frequency	Selects rated output frequency	50 Hz	• 50 Hz • 60 Hz	***CP***
Output voltage	Selects rated output voltage (Phase / Neutral)	230V	• 200V * • 208V * • 220V • 230V • 240V • 220 ÷ 240 in steps of 1V (via software only)	***CP***
Operating mode	Selects one of the 5 operating modes	ON LINE	• ON LINE • ECO • SMART ACTIVE • STAND-BY OFF • FREQUENCY CONVERTER (via software only)	***CP***
Power off due to minimum load	Automatically powers off UPS in battery operation, if the load is less than 5%	Disabled	• Enabled • Disabled	***CP***
Autonomy limitation	Sets the maximum time of operation on battery power	Disabled	• Disabled (complete battery discharge) • 1 ÷ 65000 in steps of 1 sec.	***SW***
Battery low prealarm	Sets the estimated autonomy time left for battery low warning	3 min.	1 ÷ 255 in steps of 1 min.	***SW***
Battery test	Sets the time interval for automatic battery test	40 hours	• Disabled • 1 ÷ 1000 in steps of 1 hour	***SW***
Maximum load alarm threshold	Selects the user overload limit	Disabled	• Disabled • 0 ÷ 103 in steps of 1%	***SW***
Sound alarm	Selects the operating mode of the sound alarm	Reduced	• Normal • Reduced: does not sound when bypass is activated momentarily	***CP***
Auxiliary socket (power share)	Selects the operating mode of the auxiliary socket	Always connected	• Always connected • Disconnected after *n* seconds of battery operation • Disconnected *n* seconds after the end of discharge alarm signal • ... (see manual of UPSTools)	***SW***
Battery expansion	Sets the Ah installed (external battery extension)	0 Ah	Min.: 0 - Max.: 999 (in steps of 1 unit)	***CP***
Language	Selects the display language	English	• English • Italian • German • French • Spanish	***CP***

FUNCTION	DESCRIPTION	DEFAULT	POSSIBLE SETTINGS	MOD.
Advanced Functions				
Input frequency tolerance	Selects the allowed input frequency range for the switch to bypass and synchronization of the output	± 5%	• ± 0.25% • ± 0.5% • ± 0.75% • ± 1 ÷ ±10 in steps of 1%	***SW***
Bypass voltage thresholds	Selects the voltage range allowed for the switch to bypass	Low: 180V High: 264V	Low: 180 ÷ 200 in steps of 1V High: 250 ÷ 264 in steps of 1V	***SW***
Bypass voltage thresholds for ECO	Selects the allowed voltage range for operation in ECO mode	Low: 200V High: 253V	Low: 180 ÷ 220 in steps of 1V High: 240 ÷ 264 in steps of 1V	***SW***
Activation sensitivity for ECO	Selects the activation sensitivity for operation in ECO mode	Normal	• Low • Normal • High	***CP***
Power supply of load in stand-by	Power supply of load on bypass with UPS off (stand-by status)	Disabled (load NOT powered)	• Disabled (not powered) • Enabled (**powered**)	***SW***
Bypass operation	Selects operating mode of bypass line	Enabled / High sensitivity	• Enabled / High sensitivity • Enabled / Low sensitivity • Disabled with input / output synchronization • Disabled without input / output synchronization	***SW***
Inverter synchronization (External Sync)	Selects the source of synchronization for the inverter output	From bypass line	• From bypass line • From external input	***SW***
Power-on delay	Selects the pause time for automatic reactivation after mains power has been restored	5 sec.	• Disabled • 1 ÷ 255 in steps of 1 sec.	***CP***
Power Walk-in	Enables the mode for gradual return to mains power	Disabled	• Enabled • Disabled	***SW***
Duration of Power Walk-in	Sets the duration of the gradual return to mains power (only if Power Walk-in is enabled)	10 sec	Min.: 1 sec. - Max.: 30 sec.	***SW***
Speed of synchronization between inverter and bypass line	Selects the speed of synchronization between the inverter and the bypass line	1 Hz/sec	• 0.5 Hz/sec • 1 Hz/sec • 1.5 Hz/sec • 2 Hz/sec	***SW***
External temperature probe (*optional*)	Enables reading of the external temperature probe	Not enabled	• Not enabled • Enabled	***SW***

** When these output voltage values are set, the output power of the UPS is reduced (see "Reducing the Load (to 200V and 208V)" paragraph)*

COMMUNICATION PORTS

The rear panel of the UPS (see *Rear View of the UPS*) contains the following communication ports:

- Serial port available with RS232 connector and USB connector.
  NOTE: the use of one connector automatically excludes the other.
- Expansion slots for additional COMMUNICATION SLOT interface boards

On the front, covered by the terminal-cover, there is another expansion slot for the power relay board (optional 250Vac, 3A, 4 programmable contacts)

RS232 AND USB CONNECTORS

RS232 CONNECTOR

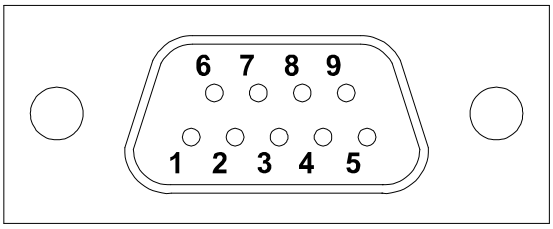

PIN #	NAME	TYPE	SIGNAL
1		IN	
2	TX	OUT	Serial line TX
3	RX	IN	Serial line RX
4			
5	GND	POWER	
6		OUT	
7			
8	+15V	POWER	Isolated power supply 15V±5% 80mA max
9	WKATX	OUT	ATX power supply wake-up

USB CONNECTOR

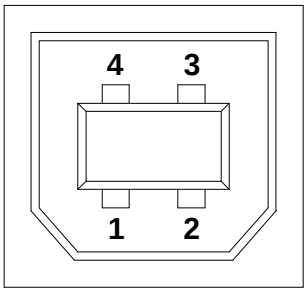

PIN #	SIGNAL
1	VBUS
2	D-
3	D+
4	GND

COMMUNICATION SLOTS

The UPS is equipped with two expansion slots for accessory communication boards that enable the equipment to communicate using the main communication standards.
Some examples:

- Second RS232 port
- Serial duplicator
- Ethernet agent with TCP/IP, HTTP and SNMP protocol
- RS232 + RS485 port with JBUS / MODBUS protocol

For further information on the accessories available, visit the web site.

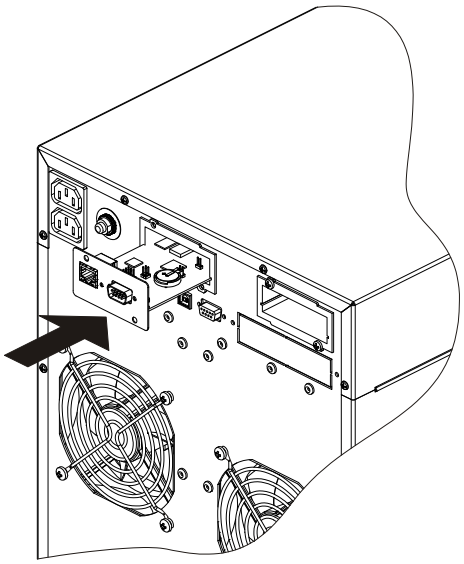

AS400 PORT

AS400 PORT

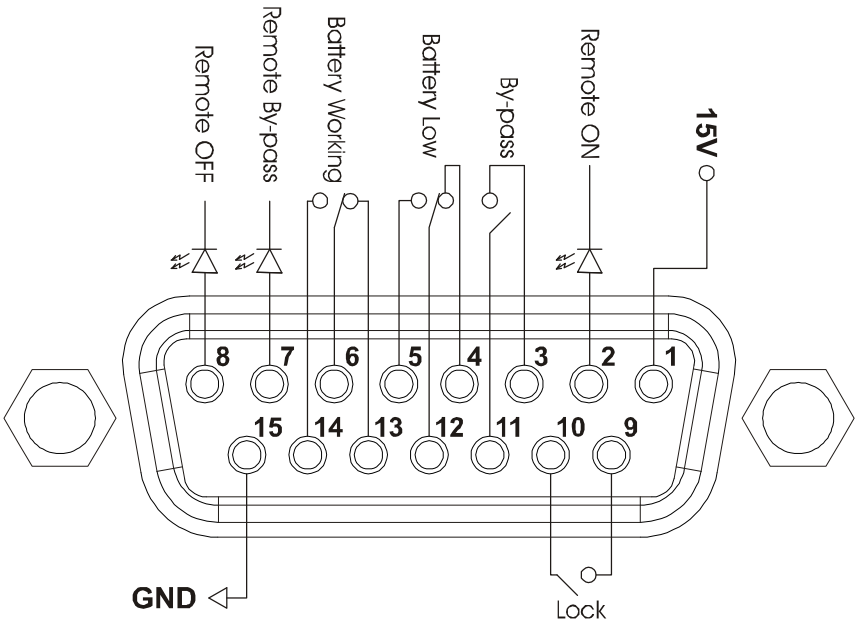

PIN #	NAME	TYPE	FUNCTION
1	15V	POWER	Isolated auxiliary power supply, +15V±5% 80mA max
15	GND	POWER	Ground to which the isolated auxiliary power supply (15V) and the remote commands (Remote ON, Remote BYPASS, Remote OFF) refer
2	REMOTE ON	INPUT #1	When pin 2 is connected to pin 15 for at least 3 seconds, the UPS is turned on
8	REMOTE OFF	INPUT #2	When pin 8 is connected to pin 15, the UPS is powered off instantly
7	REMOTE BYPASS	INPUT #3	When pin 7 is connected to pin 15, the power supply of the load switches from inverter to bypass. For as long as the connection remains, the UPS continues to operate from the bypass even if the input mains voltage is shut off. If the jumper is removed when the mains voltage is present, the UPS resumes operation from the inverter. If the jumper is removed when there is no mains voltage present, the UPS resumes operation from the battery
4,5,12	BATTERY LOW	OUTPUT #1	Indicates that the batteries are about to run out when contact 5/12 is closed (1)
6,13,14	BATTERY WORKING	OUTPUT #2	Indicates that the UPS is running on battery power when contact 6/14 is closed
9,10	LOCK	OUTPUT #3	When the contact is closed, indicates that the UPS is locked (1)
3,11	BYPASS	OUTPUT #4	When the contact is closed, indicates that the load is powered via the bypass

N.B.: The figure shows the contacts present inside the UPS, capable of carrying a max. current of 0.5A to 42Vdc. The position of the contacts shown in the figure is with no alarm or signal present.

(1) *The output may be programmed using the configuration software.*
The function indicated is selected by default (factory setting)

BUZZER

The status and faults of the UPS are signalled by the buzzer, which will emit a sound modulated according to the operating conditions of the UPS.
The various kinds of sound are described here below:

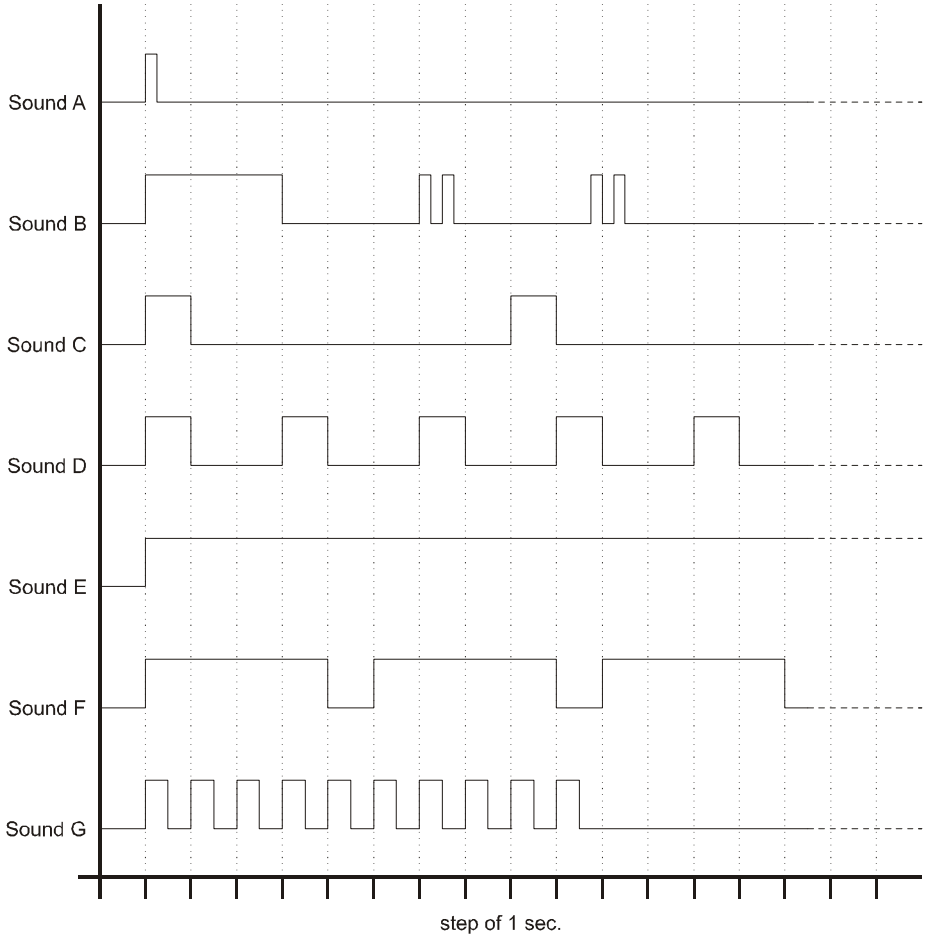

Sound A: The signal is emitted when the UPS is turned on or off using the relevant buttons. A single beep confirms power-on, activation of the battery test, cancellation of the programmed power-off. When the power-off button is kept pressed, the buzzer emits the sound A quickly four times, before confirming power-off by emitting a fifth beep.

Sound B: The signal is emitted when the UPS switches to bypass to compensate for the surge current due to the activation of a distorting load.

Sound C: The signal is emitted when the UPS switches to battery operation before the battery low signal (sound D). Possibility of silencing the report (see paragraph “Graphic Display”)

Sound D: The signal is emitted during battery operation when the battery low alarm threshold is reached. Possibility of silencing the report (see paragraph “Graphic Display”)

Sound E: This signal is emitted in the presence of an alarm or lock.

Sound F: This signal is emitted if the battery overvoltage fault occurs

Sound G: This type of signal is emitted when the battery test fails. The buzzer emits ten beeps. The alarm signal is maintained by the “batteries to be replaced” LED lights up.

SOFTWARE

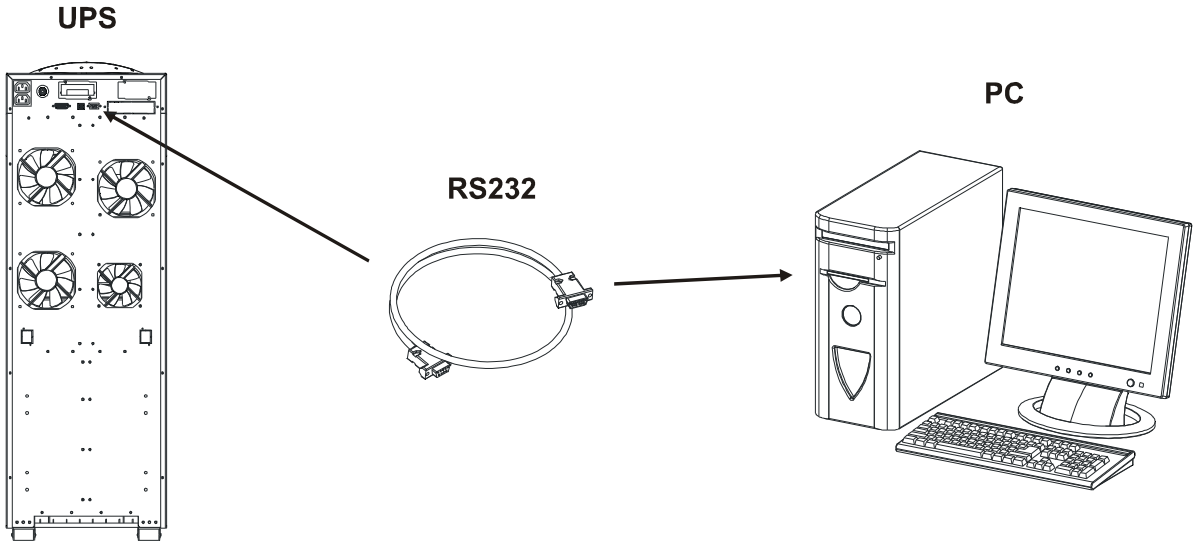

MONITORING AND CONTROL SOFTWARE

The monitoring software ensures an effective and user-friendly management of the UPS, displaying all the most important items of information such as the input voltage, load applied and battery capacity.
It can also automatically perform shutdown operations, send e-mails, sms and network messages when specific user-selected events occur.

Installation operations:

- Connect the RS232 communication port of the UPS to a COM communication port of the PC via the serial cable provided* or connect the USB port of the UPS to a USB port of the PC using a standard USB cable *.
- Insert the CD-Rom provided and select the desired operating system.
- Follow the instructions given by the installation program.
- For more detailed information on how to install and use the software, consult the manual present in the *Manuals* folder of the CD-Rom provided.

To check for a more recent version of the software, visit the web site.

CONFIGURATION SOFTWARE

The software **UPSTools** enables the parameters of the UPS to be configured using the RS232 serial port.
For a list of the possible settings at your disposal, see the ***Configuring the UPS*** paragraph.

Installation operations:

- Connect the RS232 communication port of the UPS to a COM communication port of the PC using the serial cable provided*.
- Follow the installation instructions provided in the software manual present in the *UPSTools* folder of the CD-Rom provided.

To check for a more recent version of the software, visit the web site.

** We recommend the use of a cable no longer than 3 metres.*

TROUBLESHOOTING GUIDE

The irregular operation of the UPS is very often not due to a malfunction, but to simple problems, inconveniences or distractions.
Users are advised to consult the following table which provides useful information on how to solve some of the most common problems.

WARNING: *the table below often refers to the use of the maintenance BYPASS. Remember to make sure that the UPS is powered up and* ***not in STAND BY mode*** *before restoring the correct operation.*
If it is in Stand By mode, switch the UPS on, entering the SYSTEM ON menu and wait until the start up sequence has finished before removing the maintenance BYPASS.
For further details, ***read the sequence described in the section describing the maintenance BYPASS (SWMB) very carefully.***

NOTE: For the exact meaning of the codes mentioned in the table, please read the "ALARM CODES" section.

PROBLEM	POSSIBLE CAUSE	SOLUTION
THE UPS CONNECTED TO THE MAINS, DOES NOT SWITCH TO STAND BY MODE (THE RED BLOCK/STAND-BY LED DOES NOT FLASH, NO BEEP SOUNDS AND THE DISPLAY DOES NOT LIGHT UP)	CONNECTION TO THE INPUT TERMINAL MISSING	Connect the mains to the terminals following the indications in the paragraph on Installation.
	NEUTRAL CONNECTION MISSING	The UPS cannot operate without the neutral connection. WARNING: The absence of this connection could damage the UPS and the load. Connect the mains to the terminals following the indications in the paragraph on Installation.
	1/0 SWITCH LOCATED BEHIND THE DOOR IN 0 POSITION	Set the switch to 1
	THE SWIN SWITCH LOCATED BEHIND THE DOOR IS OPEN	Close the switch
	MAINS POWER FAILURE (BLACKOUT)	Check that mains power is restored and if necessary, switch on the batteries to power the load.
	INTERVENTION OF UPSTREAM PROTECTION DEVICE	Restore the protection. WARNING: check that there is no overload or short circuit on the UPS output.
NO POWER REACHES THE LOAD	CONNECTION TO THE OUTPUT TERMINALS MISSING	Connect the load to the terminals
	THE SWOUT SWITCH LOCATED BEHIND THE DOOR IS OPEN	Close the switch
	THE UPS IS IN STAND-BY MODE	Run the start-up sequence
	STAND-BY OFF MODE HAS BEEN SELECTED	Change the operating mode: STAND-BY OFF (emergency) mode is used to power the loads only during blackouts.
	MALFUNCTION OF THE UPS AND AUTOMATIC BYPASS OUT OF USE	Insert the maintenance bypass (SWMB) and contact the nearest service centre.
THE UPS OPERATES OFF THE BATTERIES EVEN THOUGH MAINS POWER IS PRESENT	INTERVENTION OF THE UPSTREAM PROTECTION DEVICE	Restore the protection. WARNING: check that there is no overload or short circuit on the UPS output.
	THE INPUT VOLTAGE IS OUTSIDE THE ACCEPTED OPERATING VALUES FOR MAINS POWER	Problem caused by mains power. Wait until the input voltage falls within the tolerance values. The UPS will automatically switch over to mains power.

PROBLEM	POSSIBLE CAUSE	SOLUTION
THE DISPLAY SHOWS C01	JUMPER MISSING ON THE R.E.P.O. CONNECTOR (J13, POINT 5 - "VIEW OF UPS CONNECTIONS") OR IS NOT INSERTED CORRECTLY	Mount the jumper or check that it is inserted correctly.
THE DISPLAY SHOWS C02	SWMB MAINTENANCE BYPASS SWITCH IS CLOSED	Open the SWMB switch located behind the door.
	JUMPER MISSING ON THE TERMINALS FOR THE REMOTE MAINTENANCE BYPASS (J10, POINT 2 - "VIEW OF UPS CONNECTIONS")	Insert the jumper
THE DISPLAY SHOWS ONE OR MORE OF THE FOLLOWING CODES: A30, A32, A33, A34 AND THE UPS DOES NOT START UP	ENVIRONMENTAL TEMPERATURE < 0°C	Heat the environment, wait until the temperature of the heat sink rises above 0°C and then switch on the UPS
	MALFUNCTION OF THE TEMPERATURE SENSOR ON THE HEAT SINK	Activate the maintenance bypass (SWMB), switch the UPS off and then on again and exclude the maintenance bypass. If the problem persists, call the nearest service centre.
THE DISPLAY SHOWS ONE OR MORE OF THE FOLLOWING CODES: F09, F10	MALFUNCTION AT THE UPS INPUT STAGE	Activate the maintenance bypass (SWMB), switch the UPS off and then on again and exclude the maintenance bypass. If the problem persists, call the nearest service centre.
	PHASE 1 HAS A MUCH LOWER VOLTAGE THAN THE OTHER TWO PHASES.	Open the SWIN, start up the UPS using the batteries, wait until the sequence ends and then close SWIN
THE DISPLAY SHOWS ONE OR MORE OF THE FOLLOWING CODES: F11, F14, F17, L06, L07, L08, L09, L14, L17, L20	INSERTION OF FAULTY LOADS	Disconnect the load. Insert the maintenance bypass (SWMB), switch the UPS off and then on again. Exclude the maintenance bypass. If the problem still persists, call the nearest service centre.
	MALFUNCTION AT THE UPS INPUT OR OUTPUT STAGE	Activate the maintenance bypass (SWMB), switch the UPS off and then on again and exclude the maintenance bypass. If the problem persists, call the nearest service centre.
THE DISPLAY SHOWS ONE OR MORE OF THE FOLLOWING CODES: F03, F04, F05, A08, A09, A10	NO CONNECTION ON ONE OR MORE PHASES	Check the connections to the terminals
	SHORT CIRCUIT BAR MISSING FOR INPUT SINGLE PHASE CONNECTION	Insert the bar following the instructions given in the paragraph on single-phase connections.
	THE INTERNAL PROTECTION FUSES ON THE PHASES OR THE INPUT RELAY HAVE BLOWN	Call the nearest service centre.
THE DISPLAY SHOWS ONE OR MORE OF THE FOLLOWING CODES: F42, F43, F44, L42, L43, L44	THE INTERNAL PROTECTION FUSES ON THE BATTERIES HAVE BLOWN	Call the nearest service centre.

PROBLEM	POSSIBLE CAUSE	SOLUTION
THE DISPLAY SHOWS ONE OR MORE OF THE FOLLOWING CODES: A13	OPEN THE PROTECTION UPSTREAM OF THE BYPASS (ONLY FOR SEPARATE BYPASS)	Restore the upstream protection WARNING: check that there is no overload or short circuit on the UPS output.
	BYPASS SWITCH SWBYP OPEN (ONLY FOR SEPARATE BYPASS)	Close the switch located behind the door.
THE DISPLAY SHOWS ONE OR MORE OF THE FOLLOWING CODES: F19, F20	MALFUNCTION OF THE BATTERY CHARGER	Open the battery fuse holders (SWBATT) and insert the maintenance bypass (SWMB), shut down the UPS using the 1/0 button located behind the door. Switch the UPS back on again and if the problem persists, contact the nearest service centre.
THE DISPLAY SHOWS ONE OR MORE OF THE FOLLOWING CODES: A26, A27	BATTERY FUSES INTERRUPTED OR FUSE HOLDER SWITCHES OPEN	Replace the fuses of close the SWBATT switches. WARNING: whenever necessary, it is advisable to replace fuses with others of the same type (see the section “UPS internal protections)
THE DISPLAY SHOWS THE CODE S06	THE BATTERIES ARE DISCHARGED. THE UPS WAITS UNTIL THE BATTERY VOLTAGE RISES ABOVE THE ESTABLISHED THRESHOLD VALUE	Wait for the batteries to recharge or manually force start up from the “START UP” menu.
THE DISPLAY SHOWS ONE OR MORE OF THE FOLLOWING CODES: F06, F07, F08	INPUT RELAY BLOCKED	Activate the maintenance bypass (SWMB), switch off the UPS, open SWIN and contact the nearest service centre.
THE DISPLAY SHOWS ONE OR MORE OF THE FOLLOWING CODES: L01, L10, L38, L39, L40, L41	MALFUNCTIONING OF THE: ▪ TEMPERATURE SENSOR OR THE UPS COOLING SYSTEM ▪ MAIN AUXILIARY POWER SUPPLY ▪ STATIC BYPASS SWITCH	Activate the maintenance bypass (SWMB), switch the UPS off and then on again and exclude the maintenance bypass. If the problem persists, call the nearest service centre.
THE DISPLAY SHOWS ONE OR MORE OF THE FOLLOWING CODES: A22, F23, L23	THE LOAD CONNECTED TO THE UPS IS TOO HIGH	Reduce the load until it falls within the 100% threshold (or load threshold if code A22 is displayed)
THE DISPLAY SHOWS ONE OR MORE OF THE FOLLOWING CODES: L26	OUTPUT SHORT CIRCUIT	Switch the UPS off. Disconnect all the loads relating to the phases affected by the short circuit. Restart the UPS. Re-connect the loads one at a time in order to identify the fault.

PROBLEM	POSSIBLE CAUSE	SOLUTION
THE DISPLAY SHOWS ONE OR MORE OF THE FOLLOWING CODES: A39, A40 AND THE RED "REPLACE BATTERIES" LED IS ON	THE BATTERIES DID NOT PASS THE PERIODIC EFFICIENCY CHECK	It is advisable to replace the UPS batteries, as they are no longer able to provide adequate backup power to the load. **Warning: The batteries must be replaced by qualified staff**
THE DISPLAY SHOWS ONE OR MORE OF THE FOLLOWING CODES: F34, F35, F36, L34, L35, L36	▪ ENVIRONMENTAL TEMPERATURE HIGHER THAN 40°C ▪ SOURCES OF HEAT NEAR THE UPS ▪ AIR VENTS OBSTRUCTED OR TOO NEAR THE WALL	Activate the maintenance bypass (SWMB) without switching the UPS off, so that the fans will cool the heat sink faster. Remove the cause of the overheating and wait until the temperature of the heat sink lowers. Exclude the maintenance bypass.
	MALFUNCTION OF THE TEMPERATURE SENSOR OR OF THE UPS COOLING SYSTEM	Insert the maintenance bypass (SWMB) without switching off the UPS, so that the fans continue to operate and cool the heat sink faster. Wait until the temperature of the heat sink lowers. Switch off and restart the UPS. Exclude the maintenance bypass. If the problem persists, call the nearest service centre.
THE DISPLAY SHOWS ONE OR MORE OF THE FOLLOWING CODES: F37, L37	▪ ENVIRONMENTAL TEMPERATURE HIGHER THAN 40°C ▪ SOURCES OF HEAT NEAR THE UPS ▪ AIR VENTS OBSTRUCTED OR TOO NEAR THE WALL ▪ MALFUNCTION OF THE TEMPERATURE SENSOR OF OT THE BATTERY CHARGER COOLING SYSTEM	Remove the cause of the overheating. Open the fuse holder switches (SWBATT) and wait until the temperature of the battery charger heat sink lowers. Close the battery fuse holders. If the problem persists, contact the nearest service centre. WARNING: never open the SWBATT fuse holders when the batteries are operating.
NOTHING APPEARS ON THE DISPLAY OR IT SHOWS WRONG INFORMATION	POWER SUPPLY PROBLEMS FOR THE DISPLAY	Activate the maintenance bypass (SWMB) without opening the INPUT/OUTPUT switches. Turn off the 1/0 switch located behind the door, wait for a few seconds and then turn it on again. Restart the UPS. Exclude the maintenance bypass. If the problem persists, contact the nearest service centre.
THE DISPLAY AND THE FANS ARE OFF BUT THE LOAD IS POWERED	DUE TO A MALFUNCTION OF THE AUXILIARIES, THE UPS IS OPERATING ON BYPASS SUPPORTED BY THE REDUNDANT POWER SUPPLY UNIT.	Activate the maintenance bypass (SWMB). Set the 1/0 switch to "0". Wait for a few seconds. Return the 1/0 switch to "1". Try to restart the UPS. If the display does not light up or the sequence fails, contact the nearest service centre, leaving the UPS in manual bypass mode.

STATUS / ALARM CODES

Using a sophisticated self-diagnostic system, the UPS can check and indicate on the display panel its status and any errors and/or faults that have occurred during its operation. When a problem arises, the UPS signals the event by showing the code and corresponding type of alarm on the display.

- **Status:** indicates the current status of the UPS.

CODE	DESCRIPTION
S01	Precharging
S02	Load not powered (stand-by status)
S03	Power-on phase
S04	Load powered by bypass line
S05	Load powered by inverter
S06	Battery operation
S07	Waiting for batteries to recharge
S08	Economy mode enabled
S09	Ready for power on
S10	UPS locked – load not powered
S11	UPS locked – load on bypass
S12	BOOST stage or battery-charger locked – load not powered

- **Command:** indicates that a command has been activated.

CODE	DESCRIPTION
C01	Remote power-off command
C02	Remote load on bypass command
C03	Remote power-on command
C04	Battery test running
C05	Manual bypass command
C06	Emergency power-off command
C07	Remote battery charger power-off command
C08	Load on bypass command

- **Warning:** messages that refer to a specific configuration or operation of the UPS.

CODE	DESCRIPTION
W01	Battery low warning
W02	Programmed power-off enabled
W03	Programmed power-off command imminent
W04	Bypass disabled
W05	Synchronization disabled (UPS in Free running mode)

- **Anomaly:** “minor” problems that do not bring the UPS to a halt but affect its performance or inhibit the use of some of its functions.

CODE	DESCRIPTION
A03	Inverter Desynchronized
A04	External synchronism failed
A05	Overvoltage on input line 1
A06	Overvoltage on input line 2
A07	Overvoltage on input line 3
A08	Undervoltage on input line 1
A09	Undervoltage on input line 2
A10	Undervoltage on input line 3
A11	Input frequency outside tolerance limits
A13	Voltage on bypass line outside tolerance limits
A16	Bypass frequency outside tolerance limits
A18	Voltage on bypass line out of range
A19	Overcurrent peak on output
A22	Load > user-defined threshold
A25	Output isolator open
A26	Positive branch batteries missing or battery fuses open
A27	Negative branch batteries missing or battery fuses open
A29	System temperature probe faulty
A30	System temperature < 0°C
A31	System temperature too high
A32	Temperature of heat sink 1 < 0°C
A33	Temperature of heat sink 2 < 0°C
A34	Temperature of heat sink 3 < 0°C
A35	Internal battery temperature probe faulty
A36	Internal battery overtemperature
A37	External battery temperature probe faulty
A38	External battery overtemperature
A39	Positive branch batteries to be replaced
A40	Negative branch batteries to be replaced

- **Fault:** more critical problems than “Anomalies” in that, if they persist, they may bring the UPS to a halt.

CODE	DESCRIPTION
F01	Internal communication error
F02	Incorrect input phase direction.
F03	Input fuse 1 broken or input relay blocked (will not close)
F04	Input fuse 2 broken or input relay blocked (will not close)
F05	Input fuse 3 broken or input relay blocked (will not close)
F06	Input relay 1 blocked (always closed)
F07	Input relay 2 blocked (always closed)
F08	Input relay 3 blocked (always closed)
F09	Precharge of positive branch capacitors failed
F10	Precharge of negative branch capacitors failed
F11	BOOST stage anomaly
F14	Sine wave of inverter distorted
F17	Inverter stage anomaly
F19	Positive battery overvoltage
F20	Negative battery overvoltage
F21	Positive battery undervoltage
F22	Negative battery undervoltage
F23	Overload at output
F26	Output relay 1 blocked
F27	Output relay 2 blocked
F28	Output relay 3 blocked
F29	Output fuse 1 blown
F30	Output fuse 2 blown
F31	Output fuse 3 blown
F32	Battery charger stage anomaly
F33	Output fuse of battery charger blown
F34	Heat sink overtemperature
F37	Battery charger overtemperature
F42	BOOST battery 1 fuse blown
F43	BOOST battery 2 fuse blown
F44	BOOST battery 3 fuse blown

- **Lock:** indicates that the UPS is locked, a lock is normally preceded by an alarm signal and, due to their gravity, causes the inverter to be turned off and the load to be powered via the bypass line (this procedure is excluded for locks caused by serious and persistent overloads and for a lock caused by a short circuit).

CODE	DESCRIPTION
L01	Incorrect auxiliary power supply
L02	One or more internal cables disconnected
L03	Phase 1 input fuse broken or input relay locked (will not close)
L04	Phase 2 input fuse broken or input relay locked (will not close)
L05	Phase 3 input fuse broken or input relay locked (will not close)
L06	BOOST stage overvoltage positive
L07	BOOST stage overvoltage negative
L08	BOOST stage undervoltage positive
L09	BOOST stage undervoltage negative
L10	Static bypass switch fault
L11	output undervoltage
L14	inverter overvoltage
L17	inverter undervoltage
L20	Direct voltage at output of inverter or Sine wave inverter distorted
L23	Overload at output
L26	Short circuit at output of Phase1
L29	output fuse broken or output relay locked (will not close)
L34	Heat sink 1 overtemperature
L35	Heat sink 2 overtemperature
L36	Heat sink 3 overtemperature
L37	Battery charger overtermperature
L38	Temperature probe of heat sink 1 faulty
L39	Temperature probe of heat sink 2 faulty
L40	Temperature probe of heat sink 3 faulty
L41	Temperature probe of battery charger faulty
L42	BOOST battery 1 fuse blown
L43	BOOST battery 2 fuse blown
L44	BOOST battery 3 fuse blown

TECHNICAL SPECIFICATIONS

UPS Models	10 kVA	12 kVA	15 kVA	20 kVA
Input				
Nominal voltage	380-400-415 Vac 3-phase with neutral (4 wire) / 220-230-240 Vac single phase			
Nominal frequency	50-60Hz			
Accepted input voltage tolerance due to no intervention of the battery (referred to 400Vac)	±20% @ 100% load -40% +20% @50% load			
Accepted input frequency tolerance due to no intervention of the battery (referred to 50/60Hz)	±20% 40-72Hz			
Technology	High frequency IGBT with individual digital average current mode PFC control on each input phase			
Input current harmonic distortion	THDi ≤ 3% (8)			
Input power factor	≥0.99			
Power Walk-In	Programmable from 5 to 30 sec. in 1 second steps			
Output				
Nominal voltage (1)	220/230/240 Vac single phase			
Nominal frequency (2)	50/60Hz			
Nominal apparent output power	10kVA	12kVA	15kVA	20kVA
Nominal active output power	8kW	9.6kW	12kW	16kW
Output power factor	0.8			
Short circuit current	1.5x In for t>500ms			
Precision of output voltage (referred to output voltage of 400Vac)	± 1%			
Static stability (3)	± 0.5%			
Dynamic stability	± 3% resistive load (4) EN62040 -3 performance class 1 distorting load			
Voltage harmonic distortion with linear and normalised distorting load	≤1% with linear load ≤3% with distorting load			
Crest factor allowed with nominal load	3:1			
Frequency precision in free running mode	0.01%			
Inverter overloads @ PFout = 0.8 (Resistive load)	110% 10 min 133% 1 min 150% 5 sec >150% 0.5 sec			
Bypass overload	110% Infinite 133% 60 minutes 150% 10 minutes >150% 2 sec			
Technology	High frequency IGBT with digital multiprocessor (DSP+μP), voltage/current based on signal processing techniques with feed forward			
Battery Charger				
Nominal voltage	±240Vdc			
Maximum recharge current (5)	6A			
Battery charger algorithm	Two levels with temperature compensation			
Technology	Analogue switching current mode under microprocessor control (PWM voltage and charge current adjustment)			
Input voltage tolerance for recharging at maximum current	345-480Vac			

UPS Models	10 kVA	12 kVA	15 kVA	20 kVA
Dimensions and weight				
Width x Depth x Height	320 x 840 x 930 mm			
Type of metal frame	Tower enclosure with wheels for transit, display inset in upper front section. Door in lower front section giving access to switches and connections			
Weight (without batteries)	80Kg	82Kg	90Kg	95Kg
Weight with batteries	180Kg	182Kg	190Kg	195Kg
Operation and efficiency				
Operating Mode	True on line double conversion ECO mode Smart Active mode Stand-by Off (Emergency) Frequency Converter			
AC/AC performance in on line mode	≥93.5%		≥94%	
AC/AC performance in Eco mode	≥98%			
DC/AC performance in backup mode	≥92.5%		≥93.5%	
Other features				
Noise	≤48dB(A)		≤52dB(A)	
Colour	RAL 7016			
Environmental temperature (7)	0 – 40 °C			
Security Compliance	EN 62040-1-1, 2006/95/EC 73/23/EEC and 93/68/EEC directives			
EMC Compliance	EN 62040-2 cat. C2. 2004/108/EEC, 93/68/EEC and 89/336/EEC directives			

Battery Box Models	ET06P480A5- (6) ET06V480A0- (6)	ET06P480M5- (6) ET06V480M0- (6)
Battery		
Nominal voltage per branch	240Vdc	
Number of batteries/ V	40 / 12	80 / 12
Various		
Environmental temperature (7)	0 – 40 °C	
Humidity	<95% non condensing	
Protections	Over current – Short circuit	
Safety Compliance	EN 62040-1-1, 73/23/EEC and 93/68/EEC directives	
EMC Compliance	EN 62040-2 cl. C2 - 2004/108/EEC, 93/68/EEC and 89/336/EEC directives	
Width x Depth x Height	320 x 840 x 930 mm	
Weight	150 Kg	270 Kg

(1) *To keep the output voltage within the indicated precision range, retuning may be necessary following a long period of use*

(2) *If the mains frequency falls within ± 5% of the selected value, the UPS is synchronised with the mains. If the frequency is outside the tolerance range or operating off the batteries, the frequency will be the selected ±0.1%*

(3) *Mains/Battery @ 0% -100% load*

(4) *@ Mains/ battery/mains @ 0% / 100% / 0% resistive load*

(5) *The recharge current is adjusted automatically depending on the capacity of the battery installed.*

(6) *The symbol "-" replaces an alphanumeric code for internal use*

(7) *20 – 25 °C for longer battery life*

(8) *@ 100% load & THDv ≤ 1%*