SERVICE INFORMATION
PHYACTION 740 & 790 SERIES

Copyright© Uniphy BV 1995
Phyaction® is a registered trademark of Uniphy BV
Art. Code 93007916.5

Phyaction is manufactured in The Netherlands by Uniphy BV
P.O.box 558, NL-5600 AN Eindhoven, the Netherlands
Tel. +31-499-471771 Fax +31-499-474734

CHAPTER 1 **GENERAL INFORMATION** 1
- 1.1 **Introduction** 1
- 1.2 **Safety aspects** 1
- 1.3 **Installation** 2
- 1.4 **Description of the controls** 3
- 1.5 **Technical specifications** 6
- 1.6 **Explanation of symbols** 9
- 1.7 **Photos of the current waveforms** 14

CHAPTER 2 **THEORY OF OPERATION** 15
- 2.1 **Introduction** 15
- 2.2 **General block diagram** 15
- 2.3 **Electrotherapy unit** 17
- 2.4 **Ultrasound therapy unit** 18
- 2.5 **Infrared laser unit** 20

CHAPTER 3 **PERFORMANCE CHECK** 23
- 3.1 **Safety inspection** 23

CHAPTER 4 **ADJUSTMENT PROCEDURES** 25
- 4.1 **Introduction** 25
- 4.2 **Adjustment of the dose potentiometer guard circuit** 25
- 4.3 **Adjustment of the laser power measuring cell** 25

CHAPTER 5 **TROUBLE SHOOTING** 26
- 5.1 **Introduction** 26
- 5.2 **Error shutdown procedure** 27
- 5.3 **General test description** 27
- 5.4 **Error numbers summary** 33
- 5.5 **Error descriptions** 34

CHAPTER 6 **CIRCUIT DIAGRAMS** 39

CHAPTER 1 GENERAL INFORMATION

1.1 Introduction

The Phyaction 796 is an appliance for ultrasound therapy, electrotherapy (1 channel medium frequency or TENS), combination therapy (MF & US) and laser therapy. The Phyaction 792 is the same as the 796, except that it can't support laser therapy. The Phyaction 793 is the same as the Phyaction 792, except it also contains rectified currents for electrotherapy. The Phyaction 740 can only be used for laser therapy. In this manual the Phyaction 796 is described because it is the most extensive model in the series and the Phyaction 793 for the rectified currents.

In this chapter the important features from the users manual for service personnel are listed. In the next chapter the theory of operation will be explained. In chapter 3 is described how service personnel can check the operation of a 796 and in chapter 4 the adjustments which can be executed by service personnel are explained. The next chapter contains information which could be very useful for trouble shooting such as the description of the automatic self test and a list of the error numbers. The schematic diagrams are in chapter 6, the spare parts list in chapter 7 and a list of all the modifications is in the last chapter.

1.2 Safety aspects

1.2.1 Electrical safety

The equipment can only be used in areas with provisions in accordance with current statutory requirements. Pay particular attention to the use of protective earth, otherwise the patient leakage current can rise above the permitted limit for type B equipment.

1.2.2 Explosion safety

The equipment is not suitable for use in areas where flammable gasses or vapours are present. Therefore, remove the mains plug from the socket before the area in which the equipment is located is disinfected, since some disinfection solutions evaporate and subsequently form an explosive mixture.

1.2.3 Operational safety

- Using the equipment in the vicinity of short wave or microwave equipment can influence the output of the unit. Using this equipment when high frequency surgical equipment is connected to the patient at the same time can result in burning under the electrodes.
- Patients who have electrical implants (i.e. pacemaker) may only be treated following medical advice.
- Laser beams are dangerous for the eyes. You must ensure that the laser beams do not reach the eyes. In cases where the risk of laser beams reaching the eyes is increased, for example when the patient is receiving treatment to the face, then he/she should wear safety glasses. Also, when you are holding the probe at some distance from the skin and there is the possibility of the beam reflecting into the eyes, the patient and the therapist should wear glasses. For other treatment it is advised to wear glasses.
- The equipment is not suitable for use in damp areas.

- A warning sign should be hung on the door to the area in which laser therapy is being applied. The sign should include the laser warning symbol and the text "Attention, laser light is used in the area".
- The equipment may not be disinfected or sterilized.
- The equipment contains a number of safety systems which operate independently of the microprocessor.

  When the safety system detects a fault during electrotherapy the delivery of current is interrupted within a few milliseconds and it is impossible to perform treatment using the equipment. The safety of the patient is therefore guaranteed. Whenever the equipment is switched on (using the main switch) the microprocessor checks the entire safety system for correct operation.

1.2.4 Use of the appliance

The equipment and accessories should only be used by authorized personnel and in accordance with all instructions included in these operating instructions.
The Phyaction 796 is only to be used for laser, ultrasound and/or electrotherapy. The Phyaction 792 is only to be used for ultrasound and/or electrotherapy.

1.2.5 Radio interference suppression and electromagnetic compatibility

This equipment meets the guidelines for ISM equipment relating to electromagnetic compatibility and is radio interference suppressed according to VDE 0871-B. Also see paragraph 1.2.3 *Operational safety*, concerning the use of the equipment in the vicinity of short wave and microwave equipment.

1.3 Installation

1.3.1 Incoming inspection

Check that the equipment, ultrasound head(s) and laser probe(s) have not been damaged during transportation and that the accessories are intact and complete (see chapter 21 ACCESSORIES of the INSTRUCTIONS FOR USE). In the event of damage and/or defect you should inform your supplier.

1.3.2 Mains voltage

Your equipment is suitable for a nominal voltage of 110, 120, 220 or 240 Volt AC, 50-60 Hz. Indicated on the rear of the equipment will be the voltage for which it has been wired. You can not alter this yourself. Carefully check this data before you place the mains plug in the socket. The mains input is on the rear of the equipment.

1.3.3 Functional test

During production the equipment is tested for electrical safety. Whenever the equipment is switched on, the processor performs an extensive test to ensure that the equipment is operating correctly. In addition you must check whether the display and the indicator lamps are operating correctly. If this is not the case, then you must not use the equipment and you must contact your supplier.
If you can not read or if it is difficult to read the display, then press the right hand blue button and the black ⋏ button in order to darken the text or the black ⋎ button if you want to make the text lighter.

1.3.4 Selecting the operating language

You have the possibility to change the operating language by depressing the left hand yellow button and holding it down until the STANDARD SETTINGS menu appears. You have the choice from various languages. Once selected, the equipment will use the language you have chosen.

1.3.5 Location and transportation

The equipment must be set up horizontally and stable. You must ensure that the perforated sections on both sides of the casing are not covered up, thus hindering air circulation. Objects must not be placed on the equipment and you must ensure that no liquid enters the equipment.

1.4 Description of the controls

On the last page of this service manual you will find an illustration of the equipment and the accessories.

1.4.1 Display

The display[1] consists of separate picture elements which are controlled by a processor so that you can see text and figures. When you are performing a treatment, the display shows all of the information you require:

- Top left is the name of the therapy form. For combination therapy you will find the names of the two selected therapy forms here.
- The central section provides information about the parameters.
- The right-hand section provides information about the output current during electrotherapy, the power emitted during ultrasound therapy and the energy emitted at that moment for laser therapy. For ultrasound combination therapy with a current form, the right-hand section provides the information mentioned above for both selected forms of therapy. Additionally, this section also provides information regarding the therapy time.
- The bottom line of the display shows the functions of the blue buttons.

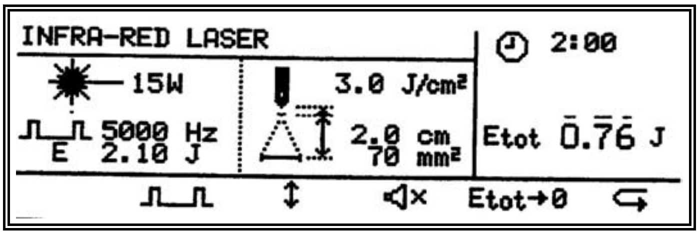

L*ay out of the display*

1.4.2 Signal lights

In the centre of the panel you will find three coloured lights:

- The green lamp[2] shows that the equipment is connected to the mains and is switched on.
- The yellow lamp[3] provides information during electrotherapy regarding stimulation. For medium frequency surge current it shows the stimulus time, for current forms with frequency modulation it shows the time during which the frequency is low, in other words, when the current form is the most sensitive.
- The red lamp[4] illuminates when the safety system has detected a fault that causes the equipment to be non-operational. A message appears on the display.

The yellow lamps[5] beside the output connectors for the ultrasound heads and the laser probes illuminate respectively as soon as ultrasound or infra-red power is emitted. The yellow lamp beside the current output[6] illuminates as soon as $5mA_{eff}$ of current is exceeded.

1.4.3 Infra-red sensor

Infra-red laser beams are invisible. In order to check that the laser probe is operating correctly, a sensor[7] is built in. This sensor is located to the right above the current output socket. Using application no. 903 the infra-red laser power can be tested. If the laser probe is held in front of the sensor, the measured peak power will appear on the display. We advise you to perform such a measurement periodically, for example monthly. When performing a treatment using laser therapy, the infra-red sensor can be used to test whether laser energy is being emitted through the probe.

1.4.4 Knobs

On the front and to the right there are three potentiometers. When you turn these knobs fully anti-clockwise, you will detect a click indicating that they are in the zero position. From the top to the bottom the knobs have the following functions:

- Using the top knob[8] you can adjust the laser energy in Joules. The treatment time changes automatically.
- The middle knob[9] is used to adjust the peak intensity in Watt/cm^2 for ultrasound.
- The bottom knob[10] is the dose regulator for electrotherapy.

1.4.5 Push-buttons

- The blue buttons[11] have a function which is different for each program and each menu. The display indicates clearly whether the buttons have a function and, if so, which function.
- The black buttons ⮝ or ⮟[12] are used to increase or decrease the value of a parameter which you have previously selected.
- The left hand yellow button[13] is used to return to the main menu. If you hold down this button for a few seconds you will arrive in a special menu STANDARD SETTINGS.
- Once you have selected a program, the right hand yellow button[14] quickly and easily provides you with further options of the selected program. Using this button you can call up the applications from the main menu.
- Using the green button[15] you can call up the special memory function. You can store, retrieve and change 250 different treatments.

1.4.6 Output connectors and sockets on the front

The equipment is fitted with a number of connectors for the following functions:

- The two connectors[16] on the far left are used to connect the laser probe(s). It does not matter to which of the two connectors the laser probe(s) is/are connected.
- The two middle connectors[17] are for connecting the ultrasound head(s). Here too it makes no difference to which connector the head(s) is/are connected. You can connect two heads at the same time.
- The two safety sockets[18] on the far right are used for connecting the electrode cables during electrotherapy. For combination therapy you can only use the socket on the far right, since in this case the other socket is without current. In this case the metal treatment surface of the ultrasound head forms the other electrode.

1.4.7 Key switch

When you want to switch on a program utilizing laser, you should turn the key switch[19] to the right. To switch off, turn the key to the left. To prevent the use of laser by unauthorized personnel, you should remove the key from the equipment when it is not being used.

1.4.8 Operating elements on the rear of the equipment

The following operating elements are located on the rear of the equipment:

- Mains input with main switch[20].
- Fuse holder[21] between the mains input and the main switch. The rating of the fuse to be used is stated on the rear of the unit.
- The serial in- and output[22]. These are for future extensions.
- Connector for potential mains equalisation[23].
- Label with equipment data[24].

1.4.9 Laser probes

Various laser probes[25] can be supplied. When you have two probes, these can be connected to your equipment at the same time. Using a blue button you select from the program which probe you wish to use. A green lamp[26] then illuminates on the selected probe. On the probe is a knob[27], which has to be pressed to allow laser light to be emitted. When laser light is being emitted, the yellow lamp[28] on the probe illuminates. For reasons of patient safety and correct operation of the equipment, the connection of probes other than those supplied by Uniphy is not permitted.
If in doubt about the proper operation of your laser probe, you can check this by using technical application no. 903.

⚠ Looking into the probe when laser light is being emitted can seriously damage the eyes. Therefore, never look into the laser probe and never point it towards the eyes.

1.4.10 Ultrasound treatment heads

You have the choice of three ultrasound heads[29] with an ERA (Effective Radiation Area) of respectively 1, 4 or 10 cm^2. For each treatment head a multi-functional head holder[30] is supplied. With each treatment head both 1 and 3 MHz ultrasound can be given. Two treatment heads can be connected to the equipment at the same time, provided the treatment heads do not have the same format. Using one of the blue buttons you select which of the two heads you wish to use. A green lamp[31] illuminates on the treatment head as soon as it has been selected and a red lamp[23] illuminates when the surface of the head makes insufficient contact with the patient. The ultrasound power is then automatically adjusted back so that overheating and subsequent wear of the treatment head is prevented. During insufficient contact the treatment time also stops and when contact is made it continues. In this way the set time is actually utilized.
Before using a new treatment head a one-off operation should be performed, using technical application no. 902, to tune your equipment to the treatment head.

1.5 Technical specifications

The Phyaction 790-series consists of two models: the Phyaction 792 and 796. The same specifications for the Phyaction 796 also apply to the Phyaction 792, however, the 792 model is not fitted with an IR-laser.

1.5.1 Ultrasound therapy

General:

- Duty-cycle adjustable from 1:1 up to 1:15
- Power setting using potentiometer
- The unit calculates the total effective power and displays it on the LCD
- Option to tune the ultrasound head to the unit using a special program
- Option of combination therapy using one of the 4 options with electrotherapy current forms
- For each head a green lamp illuminates as soon as the head is selected
- During insufficient contact the ultrasound power is automatically reduced and a red lamp illuminates on the head. The timer stops
- Reflected waves are partially absorbed by the heads to avoid intensity peaks

Specifications small treatment head (model 291):

- Frequencies: 0.8 MHz and 3.3 MHz
- BNR at 0.8 MHz: < 5
- BNR at 3.3 MHz: < 4
- ERA: 1 cm^2
- Output power: 0 - 1.5 W/cm^2 at 3.3 MHz continuous
  0 - 2 W/cm^2 at 0.8 MHz continuous
  0 - 3 W/cm^2 at 0.8 and 3.3 MHz pulsed

Specifications large treatment head (model 292):

- Frequencies: 0.8 MHz and 3.3 MHz
- BNR at 0.8 MHz: < 5
- BNR at 3.3 MHz: < 4
- ERA: 4 cm^2
- Output power: 0 - 1.5 W/cm^2 at 3.3 MHz continuous
  0 - 2 W/cm^2 at 0.8 MHz continuous
  0 - 3 W/cm^2 at 0.8 and 3.3 MHz pulsed

Specifications extra large treatment head (model 293):

- Frequencies: 1.0 MHz and 3.4 MHz
- BNR at 1.0 MHz: < 5
- BNR at 3.4 MHz: < 4
- ERA: 10 cm^2
- Output power: 0 - 1 W/cm^2 at 1.0 and 3.4 MHz continuous
  0 - 1.5 W/cm^2 at 1.0 and 3.4 MHz pulsed

1.5.2 Laser therapy

General:

- Pulse repetition frequency 2 - 5000 Hz
- Energy adjustable with potentiometer
- Operating distance 0 - 5 cm (for energy density calculation)
- Conversion of energy to energy density with given operating distance and calculation of treatment area
- Test eye for checking power of the laser
- A green lamp illuminates when probe is selected and yellow lamp when probe emits energy
- Prior to accessing the laser program the key on the unit should be turned

Specifications 15 W probe (model 241):

- Peak power: minimum 12 W, maximum 18 W
- Max. average power: 12 mW
- Wave length: 904 nm (infrared)
- Laser class: 3B

- Pulse duration: 150 ns
- Beam diameter: 2.5 mm
- Divergence angle: approx. 20 degrees
- Dimensions: diameter 2.5 cm, length 21 cm

Specifications 25 W probe (model 242):
- Peak power: minimum 22 W, maximum 30 W
- Max. average power: 25 mW
- Wave length: 904 nm (infrared)
- Laser class: 3B
- Pulse duration: 200 ns
- Beam diameter: 4.0 mm
- Divergence angle: approx. 32 degrees
- Dimensions: diameter 2.5 cm, length 21 cm

Specifications 4x18 W probe (model 245):
- Peak power per diode: minimum 16 W, maximum 22 W
- Max. average power: 60 mW
- Wave length: 904 nm (infrared)
- Laser class: 3B
- Pulse duration: 150 ns
- Beam diameter: 4 x 2.5 mm
- Homogeneous intensity: from appr. 3 cm from the probe
- Divergence angle: approx. 20 degrees
- Dimensions: diameter 4 cm, length 22 cm

1.5.3 Electrotherapy

Parameters two-pole interferential current:
- Carrier wave frequency: 4000 Hz
- AMF: 1 - 200 Hz
- Spectrum: 0 - 200 Hz
- Time: 1 - 100 s
- Contour: 1 - 100%
- Output current: 140 mA_{peak} maximum at 500 Ohm

Parameters, medium frequency surge current:
- Carrier wave frequency: 4000 Hz
- AMF: 1 - 200 Hz
- Stimulation time: 1 - 100 s
- Pause: 1 - 100 s
- Surge: 1 - 100%
- Output current: 140 mA_{peak} maximum at 500 Ohm
- Choose from automatic or manual stimulation using pulsator

Parameters TENS current, continuous:
- Pulse time: 10 - 300 µs
- Pulse frequency: 1 - 500 Hz
- Spectrum: 0 - 200 Hz
- Time: 1 - 100 s
- Contour: 1 - 100%
- Output current: 140 mA_{peak} at 500 Ohm
- Pulse form: asymmetrical

Parameters TENS current, burst:
- Pulse time: 10 - 300 µs
- Pulse frequency: 80 - 500 Hz

- Burst frequency: 1 - 10 Hz
- Number of pulses per burst: 5
- Output current: 140 mA_{peak} maximum at 500 Ohm
- Pulse form: asymmetrical

TENS current, surge (Phyaction 793 only):
- Pulse time: 10 - 300 μs
- Pulse frequency: 1 - 500 Hz
- Train duration: 1 - 100 s
- Train interval: 1 - 100 s
- Surge: 1 - 100%
- Output current: 140 mA_{peak} at 500 Ohm (at a pulse time up to 100 μs)
- Pulse form: asymmetrical

Continuous galvanic current (Phyaction 793 only):
- Output current: 80 mA_{peak} at 500 Ohm

Interrupted galvanic current, rectangular or triangular pulse (Phyaction 793 only):
- Pulse time: 0.1 - 1000 ms
- Pause time: 2 - 9999 ms
- Output current: 80 mA_{peak} at 500 Ohm

Faradic current, rectangular or triangular pulses (Phyaction 793 only):
- Pulse time: 0.1 - 1000 ms
- Pause time: 2 - 9999 ms
- Train duration: 0.05 - 100 s
- Train interval: 0.05 - 100 s
- Surge: 1 - 100%
- Output current: 80 mA_{peak} at 500 Ohm

Ultra Reiz current (Phyaction 793 only):
- Pulse time: 2 ms
- Pause time: 5 ms
- Output current: 80 mA_{peak} at 500 Ohm

Diadynamic currents MF, DF, CP, CP-ISO, LP (Phyaction 793 only):
- MF frequency: 5 - 200 Hz
- DF frequency: 2 x MF frequency
- MF time: 1 - 100 s
- DF time: 1 - 100 s
- Surge: 1 - 100%
- Output current: 80 mA_{peak} at 500 Ohm

1.5.4 Further details

- Fully programmable memory with space for up to 250 treatment procedures and with battery back-up
- Many recommended programs for simple application per indication
- You can set different operating languages yourself: Dutch, English, German, French, Italian and Spanish
- Pre-programmed parameters can be changed to your requirements
- Treatment time adjustable to 30 minutes

- Acoustic monitor with volume control can be switched on
- Serial input and output for extensions
- Built-in electrode and cable test
- Solid metal casing (Faraday's cage)
- Ergonomically designed with very attractive appearance
- Simple to operate due to clear symbols and the availability of different languages on the display
- Dimensions: 41 x 28 x 13 cm
- Weight Phyaction 796: 6.5 kg (excluding accessories and packing)
  Phyaction 740: 5.7 kg (excluding accessories and packing)
- Insulation class (790 series): I, type BF
  Phyaction 740: I, type B
- Voltage: 110, 220, 230 or 240 Volt, 50-60 Hz
- Input current (790 series): maximum 300 mA$_{eff}$ at 230 V and 600 mA$_{eff}$ at 110 V
  Phyaction 740: maximum 150 mA$_{eff}$ at 230 V and 300 mA$_{eff}$ at 110 V

1.6 Explanation of symbols

1.6.1 General

	Indication of treatment time
	Contrast

1.6.2 Electrotherapy

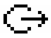	Output current
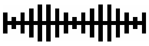	Two pole MF current
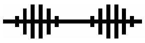	MF surge current
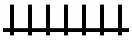	Biphasic current, continuous
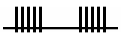	Biphasic current, burst

1.6.3 Electrotherapy, parameter adjustments

	Contour
	Pulse time biphasic current
	Frequency of biphasic current
	Burst frequency of biphasic current
	Stimulation time with MF surge current
	Stimulation interval with MF surge current
◷	Timing clock
🔇	Sound signal on/off

1.6.4 Ultrasound therapy

10	Selected ultrasound head, small, large, extra large
⎍	Duty-cycle

1.6.5 Ultrasound therapy, parameter adjustments

10	Selectable ultrasound head, small, large, extra large
1↔3MHz	Toggle ultrasound frequency
	Duty-cycle
◷	Timing clock

1.6.6 Laser therapy

✹— 15W	Laser probe, 15W
✹— 25W	Laser probe 25 W
✹— 4×18W	Laser probe 4 x 18 W

⎍_⎍	Pulse repetition frequency
↻	Turn key clockwise
↺	Turn key anti-clockwise

1.6.7 Laser therapy, parameter adjustments

✳— 15	Selectable laser probe, 15W
✳— 25	Selectable laser probe, 25 W
✳— 4x18	Selectable laser probe, 4 x 18 W
⎍_⎍	Pulse repetition frequency
↕	Distance between laser probe and skin
Etot→0	Set total energy to zero
↪	Repeat function
🔇	Sound signal on/off

1.6.8 Treatment memory

🗀	Programmable memory
→▭	Store a therapy
▭→	Start a stored therapy
▭×▭	Clear a stored therapy
ⓘ	Information memory usage

1.6.9 Symbols on the front of the appliance

⧉	Memory function
⍐	Return to main menu
⍗	Options for this program
△	Raising the selected parameter
▽	Lowering the selected parameter
⏻	Indication light for Stand-by
⊗	Indication light for stimulus
☒	Indication light for detected errors
⊖→	Current
○	"OFF" for a part of equipment
⊙	"ON" for a part of equipment
⚠	Laser
)))	Ultrasound
Ⓣ	Sensor for laser power measurement
⚠	Attention, see manual

1.6.10 Symbols on the back of the appliance

Off

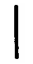
On

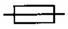
Fuse

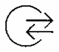
Serial in- and output

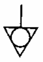
Equipotentiality

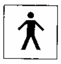
Type BF

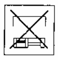
Do not open

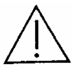
Attention, see manual

1.6.11 Laser, warning symbol and explanatory labels

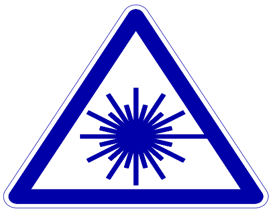
Laser warning symbol; on every laser probe

INVISIBLE LASER RADIATION
AVOID EXPOSURE TO BEAM
CLASS 3B LASER PRODUCT

Explanatory label; on every laser probe

LASER APERTURE
15 W_{pk}/ 150 ns/ 904 nm

Explanatory label; on laser probe model 241

LASER APERTURE
25 W_{pk}/ 200 ns/ 904 nm

Explanatory label; on laser probe model 242

LASER APERTURE
4x18 W_{pk}/150 ns/904 nm

Explanatory label; on laser probe model 245

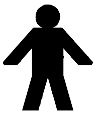

Type B

1.7 Photos of the current waveforms

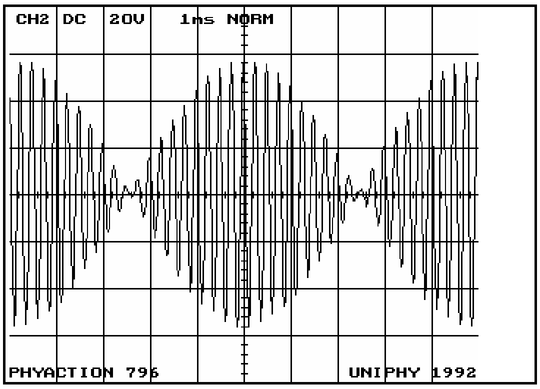

Two pole interference

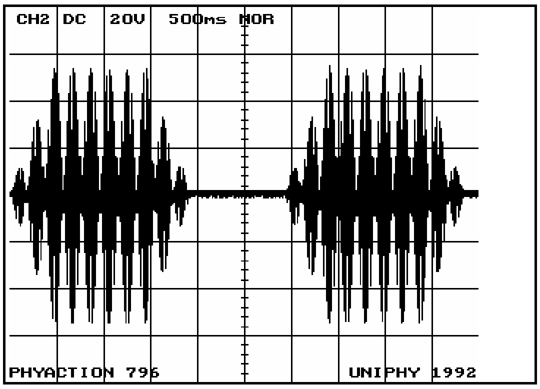

MF surge current

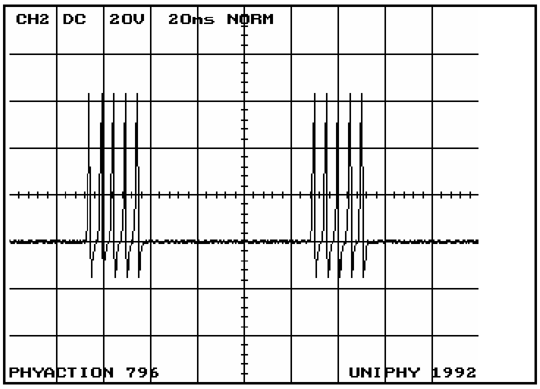

Biphasic current, burst

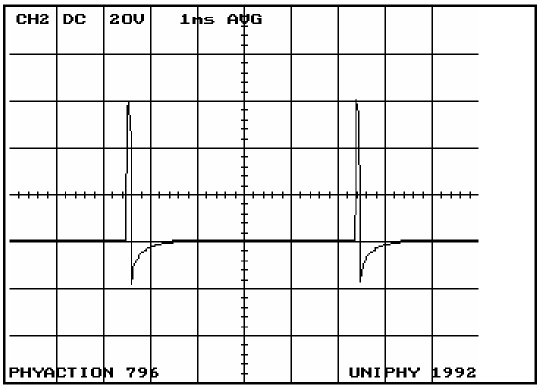

Biphasic current, continuous

CHAPTER 2 THEORY OF OPERATION

2.1 Introduction

In this chapter a description of the electronic construction of the Phyaction 790-series is given on the functional level. Only where safety aspects are concerned we will look into the actual circuitry. The next paragraph deals with the whole appliance and those blocks that are in use with all therapies. In the subsequent paragraphs more detailed block diagrams for each kind of therapy will be discussed.

2.2 General block diagram

Figure 1 shows the functional blocks of the Phyaction 797VIP. The most extensive appliance of the series. The microcontroller core controlling the entire appliance is featured in the middle. Immediately below that are the blocks associated with the three therapies and the output panel. At the left there is the user interface and at the right the serial interface. In the upper part there is the inevitable power supply. The parallel interface which is only present in the VIP versions is also drawn here.

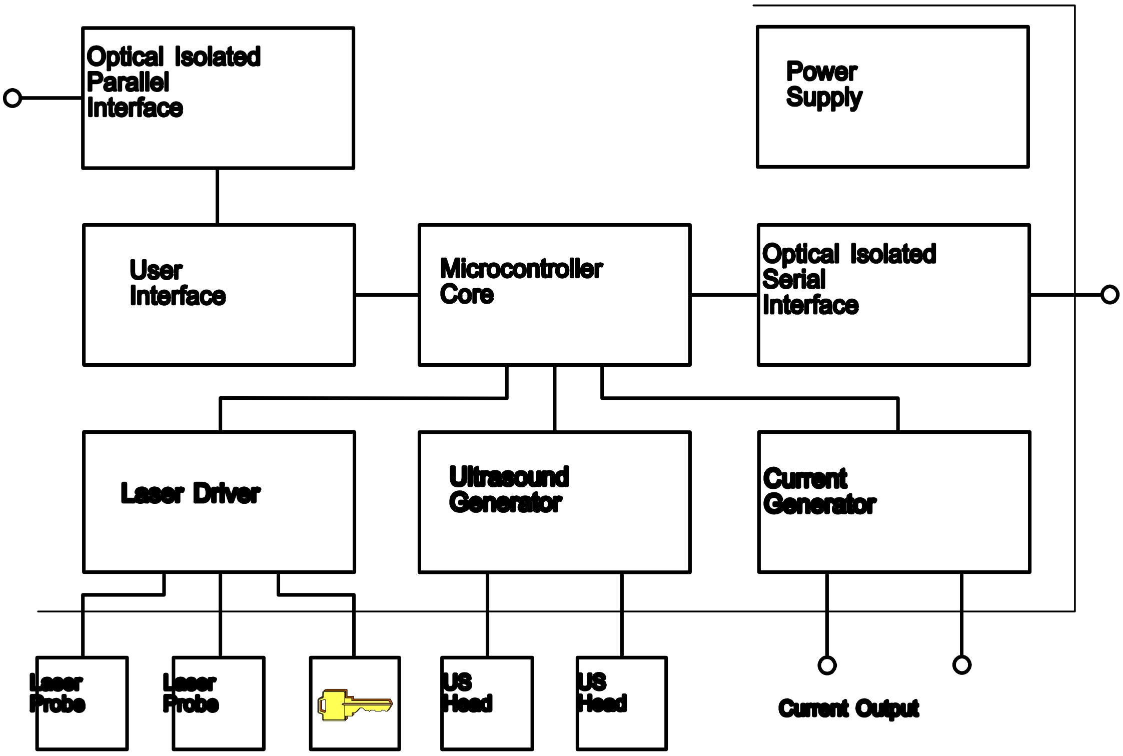
Optical Isolated Parallel Interface
Power Supply
User Interface
Microcontroller Core
Optical Isolated Serial Interface
Laser Driver
Ultrasound Generator
Current Generator
Laser Probe
Laser Probe
US Head
US Head
Current Output

Figure 1, Functional blocks of the Phyaction 797VIP

2.2.1 Microcontroller core

As central processing unit a microcontroller is being used in favour of a microprocessor. The reason being that a microcontroller, by its construction and available commands, is particularly suited for bit-level operations. From the software point of view there is no difference but it is much easier to manipulate a single I/O-pin. The microcontroller used in the Phyaction 790-series is the 80C552. It incorporates in addition to the actual 8051 controller the following circuits:

- 256 Byte RAM
- 3 programmable timers
- 1 A/D-Convertor with eight multiplexed inputs and 10-bits resolution
- 5 I/O ports, each 8 bits wide
- 2 Pulse width modulators with 8-bits resolution
- 1 I^2C-bus interface for internal data transmission
- 1 full-duplex UART (Universal Asynchronous Receiver and Transmitter)
- 1 Watchdog timer

Apart from this microcontroller the core contains the following devices:

- an 8-kbyte RAM with integrated lithium battery (NOVRAM)
- a 1-Mbit EPROM
- a programmable I/O-expander
- an analog multiplexer to increase the amount of ADC inputs
- some PAL's and HCMOS chips as decoders and buffers

2.2.2 User interface

A LCD (Liquid Crystal Display) with a console forms the major link in the communication between the operator and the microcontroller. The display is connected directly to the microcontroller via the data-bus and the keys of the console via the I^2C-bus. The menus and program screens are shown on the display and the operator selects the requested therapy with the buttons and also changes or enters parameter settings with them.

2.2.3 Serial interface

A serial interface identical to that in the Phyaction 780-series is provided to be used with future extensions. The way of operating is similar to that of the teletype current loop although the level of the current has been reduced. The interface is fully isolated from the rest of the circuits in the appliance by means of optocouplers with an isolation voltage of 2.5 kV.

2.2.4 Parallel interface

This unit, which is only present in the VIP versions, makes up the link between the LCD and the I/O-card in the PC. Again using optocouplers with an isolation voltage of 2.5 kV to achieve full galvanic isolation, the necessary control-signals are tapped and the data is synchronously stored in a RAM. This RAM in its turn is being asynchronously read by the software running on the PC which subsequently reconstructs the image shown on the LCD.

2.2.5 Power supply

The power supply is of a conventional linear design with a mains transformer for medical devices followed by secondary fuses, bridge rectifiers and smoothing capacitors. From the unstabilised voltages created in this way, the one called +29V is used to supply the power stages for the current generation and the ultrasound generation. The other supply voltages, +24V, +15V, -15V and +5V (Vcc), are stabilised by linear regulators with the latter three in addition being protected from overvoltages by crowbars. A reset signal is issued to the microcontroller when the +5V (Vcc) is beneath the threshold level for the logic ICs.

2.3 Electrotherapy unit

Figure 2 shows the functional blocks for the electrotherapy unit and the associated safety circuit. These circuits are identical to the ones in the Phyaction 780-series. Just a minor simplification has been made in the setting of the maximum current guarding because for the near future only generation of MF currents and TENS is envisaged. Also as a consequence thereof the current-mode facility and the allied switch-over options in the patient output circuit are not needed for the time being.

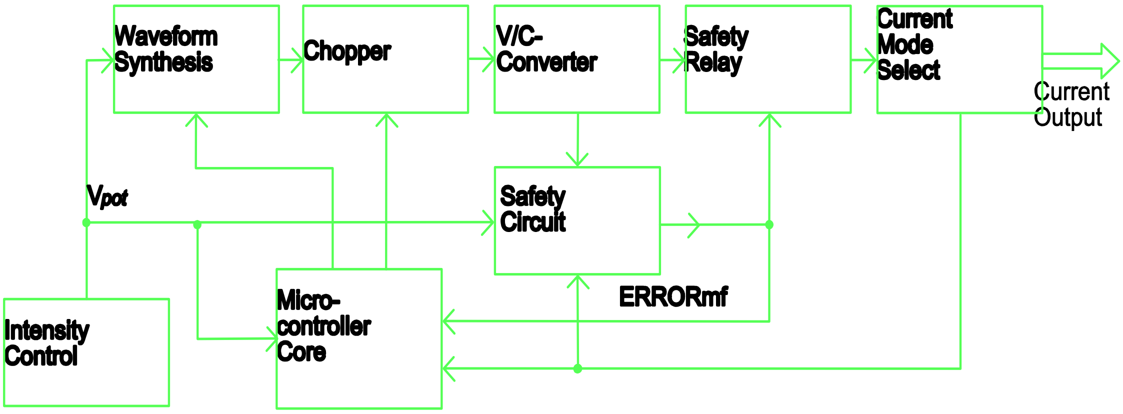

Figure 2, Functional blocks of the electro-therapy unit

2.3.1 Waveform synthesis

The current waveform being selected, the microcontroller accordingly controls the waveform synthesizer to yield the required waveform. The sample data of the waveform are stored in an EPROM and from there transferred to the D/A-converters in the course of the phase. The magnitude of the resulting wave is always proportional to the value of V*pot* being set by the intensity control-knob because it is established by modulating this control-voltage with multiplying D/A-converters.

2.3.2 Chopper

The main purpose of the chopper is to apply the waveform to one of the two inputs of the V/C-converter and to establish in this way the polarity. With TENS the pulses are formed directly by activating the chopper to pass its input voltage to one half of the V/C-converter.

In case of rectified current generation the chopper is operated on a substantially higher switch-rate and the output current is rectified before being applied to the patient. The used switching rate yields an unnoticeable current in case of a defective rectifier.

2.3.3 Voltage to current converter

The voltage-to-current-converter (V/C-converter) converts, as the name indicates, the applied input voltage into a linear proportional output-current. As it is conceived as a balanced stage it is easy to determine the polarity of the output current by applying the controlling voltage to one of the two inputs. The primary output current flows through a low-ohmic resistor. The voltage drop across this resistor is proportional to the absolute magnitude of the actually generated output current and is fed to the safety circuit.

In order to reduce the power dissipation in the actual V/C-converter it is powered through a so called tracing series regulator. This regulator lowers the supply voltage to a level that just accommodates the converter.

2.3.4 Safety circuit

The voltage drop sensed in the V/C-converter is used in this circuit to monitor whether the output current oversteps the limits as stated in IEC 601-2-10 or 150% of the set value, whichever is smaller. In addition the intensity control is monitored for interruptions of the ground terminal. This all is achieved fully independent of the microcontroller by comparators that, in case of a fault, switch off the safety relay, which interrupts the patient current circuit. This happens so fast that even in case the full supply voltage is suddenly applied to one of the primary windings of the output transformer, the energy contents of the resulting pulse will be well below the allowed limit. Once the safety relay has been switched off it remains in this state and one must switch on the appliance after the cause has been removed, e.g. turned up intensity control at switch-on.

Because on switch-on of the appliance a selftest is performed which of course includes a test of the safety circuit, a way is provided for the microcontroller to switch on the safety relay. This is necessary as the safety relay will be in the off state after switch-on and should also switch off a couple of times in the course of the selftest. This possibility to switch on the safety relay is time limited however to 3 seconds from power-on. When this time has expired the microcontroller only can switch off the safety relay, e.g. when an error of another nature has been detected. In this way it is guaranteed for the safety circuit to operate independently from the generation of the patient current and the software.

2.3.5 Current mode selection

As mentioned before it is also possible to generate rectified currents like diadynamic, Ultra Reiz, galvanic, etcetera. To that object a rectifier is switched into the patient current circuit. The choice between rectified and alternating currents is also sensed by the microcontroller to select the adherent set of waveform options and waveform synthesizer control-signals. The rectifier circuit is only present in the Phyaction 793.

2.4 Ultrasound therapy unit

Figure 3 shows the functional blocks for the ultrasound therapy unit. As the ultrasound power is generated by switching, it appeared to be necessary to encapsulate the committed circuitry, from the PLL (Phased Locked Loop) up to the impedance match and including the SSMPS (Secondary Switch Mode Power Supply), in a tin case to meet the emission-limit requirements. This shielding extends itself over the inner shield conductor of the treatment head cable up to the transducer which is mounted in a closed aluminum cylinder.

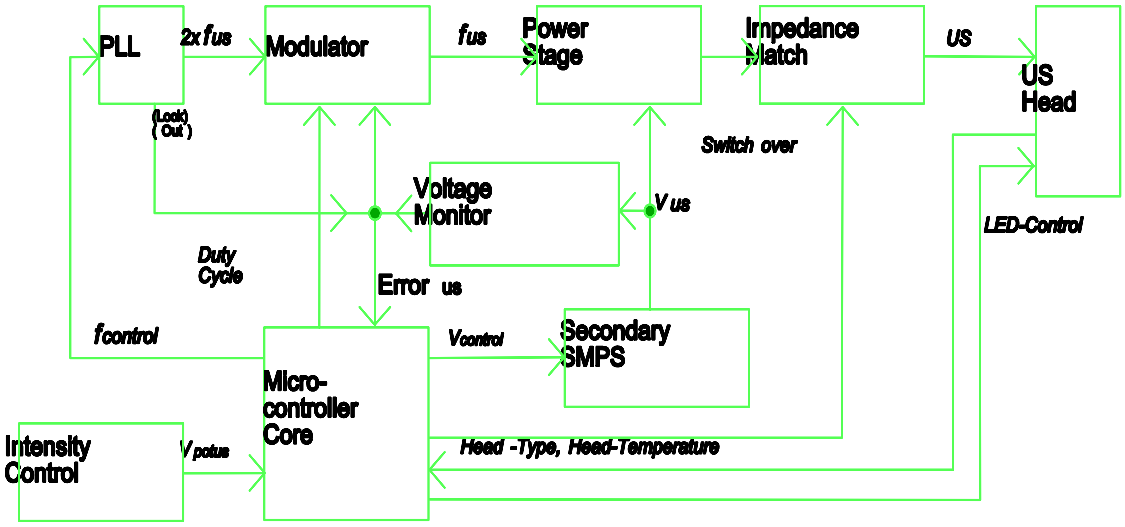

Figure 3, Functional blocks of the ultrasound therapy unit

Settings of parameters as duty cycle, treatment time and frequency, 1 or 3 MHz resp., is done over the user interface. The microcontroller determines the precise operating frequency for the selected treatment head, based upon the identification codes that have been entered during installation of this treatment head. These codes are also used to assess the emitted amount of ultrasound power. The microcontroller also counts down the treatment timer, which it will halt when the emission of ultrasound power is interrupted during the treatment. The operator sets the required ultrasound intensity with the control-knob of the same name. The microcontroller uses the control-voltage V_{potus} together with the identifying codes and the type of the selected treatment head to calculate $V_{control}$ which is fed to the SSMPS in order to generate the requested amount of ultrasound power. The momentary output power converted by the duty cycle is shown on the display as effective output power.

2.4.1 PLL

Because the microcontroller is not capable of generating the drive frequency directly, a PLL (Phased Locked Loop) is used to convert the low-frequency control-signal $f_{control}$ to the drive frequency $2xf_{us}$ needed. Like the description suggests, this frequency is a twofold of the ultrasound-frequency because it gets divided by two in the modulator. As there are two operating areas for the ultrasound-frequency, about 0.8 and 3.3 MHz respectively, and the control-signal $f_{control}$ always is lying about 400 Hz, the feedback loop of the PLL is closed via a divider whose divisor is switched together with the oscillator range. To prevent operation on faulty ultrasound-frequencies, e.g. in absence of the $f_{control}$ signal, a lock-out monitor has been provided whose output is wired-orred with $Error_{us}$.

2.4.2 Modulator

The modulator switches its outputs with half the rate of the drive frequency $2xf_{us}$ to achieve an exactly symmetrical driving of the power stage. The duty cycle signal is used to switch off synchronously both outputs in order to prevent any 'misfirings'. As a result the ultrasound output-signal is completely switched on and off (CW modulation). $Error_{us}$ forms another way to switch off the outputs asynchronously in case of a fault.

2.4.3 Secondary switch mode power supply

This is a regular down-converter powered by the +29V supply. The only peculiarity being that its output voltage is controllable by $V_{control}$. In this way the microcontroller can set the ultrasound power by setting $V_{control}$ proportional to the square-root of the required power.

2.4.4 Power stage

The power stage is a balanced switched half-bridge. It is supplied by the SSMPS mentioned above to control the momentary output power. The switching operation being controlled by the modulator as described above. The switches are formed by power-MOSFETs driven from buffers that insert a switch-on gap to prevent both sides from conducting simultaneously.

2.4.5 Impedance matching

The nature of the load of the transducers in the treatment head is essentially capacitive and varies with the surface area and the operating frequency. Therefore a collection of inductors and capacitors is available from which the microcontroller inserts the required combination for the selected type of the treatment head and operating frequency.

2.4.6 Ultrasound treatment head

The most important part is of course the transducer, a piezoelectric crystal with a surface area appropriate for the type of treatment head. This piezoelectric crystal is mounted on the base of an aluminum cylinder, with the thickness of the base enabling it to use two considerably different operating frequencies. The aluminum cylinder also functions as the second electrode for the patient current when applying combined therapy. A temperature sensor is mounted on the other end of the cylinder to monitor the temperature of the treatment surface. The type of the treatment head is encoded by a resistance value. Also provided are LED-lamps for signalling purposes. A green colour signals the treatment head being stand-by or in normal operation and a red colour signals an interruption of the treatment because of overheating of the treatment surface or insufficient acoustical contact. The LED-lamps are driven by a single conductor by controlling the direction of the current.

2.4.7 Safety circuit

As described above a lock-out of the PLL will force the modulator to switch off. The supply voltage of the power stage is also monitored for voltages beyond the intended operating range. This is done independently from the microcontroller as it senses this voltage already to adjust $V_{control}$ for tolerances in the SSMPS. The resulting $Error_{us}$ signal inhibits the modulator and is also sent to the microcontroller. The $Error_{us}$ signal can also be activated the other way round by the microcontroller if it detects another error.

2.5 Infrared laser unit

The circuit for infrared laser therapy consists of two main parts. The part that delivers the actual laser pulse is located in the laser probe. The control-circuit and the measuring facility are in the base appliance. Only with the switchlock turned on the power supply is connected to the laser probe and the I/O-buffers. This warrants the operational safety as it is therefore impossible to release laser radiation without using the key.

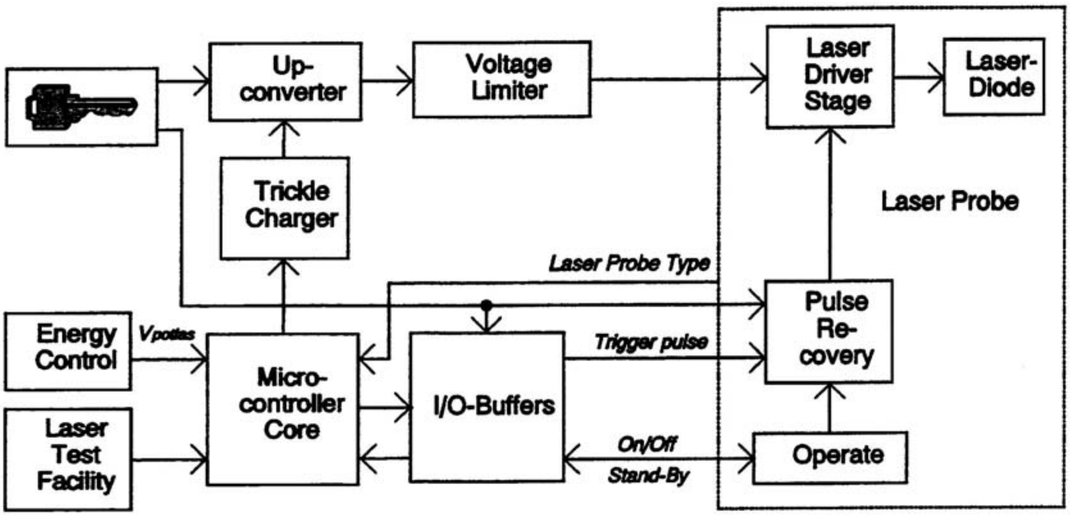
Up-converter
Voltage Limiter
Laser Driver Stage
Laser-Diode
Trickle Charger
Laser Probe
Laser Probe Type
Pulse Re-covery
Energy Control
Vpotias
Micro-controller Core
I/O-Buffers
Trigger pulse
Laser Test Facility
On/Off
Stand-By
Operate

Figure 4, Functional blocks of the infrared laser therapy unit

The microcontroller controls the laser probes through the I/O-buffers. The operator sets with the energy control-knob the amount of energy that has to be delivered. The microcontroller converts this, depending on the selected repetition rate, distance to the surface to be treated and the laser probe being employed (= type of laser), into energy per square centimetre and required treatment time. These three parameters are simultaneously evaluated and shown on the display whilst the energy control-knob is being operated. When the pushbutton on the laser probe is depressed, the microcontroller issues trigger pulses to the laser probe and calculates how much energy has been delivered. The triggering stops if this has accumulated to the same amount of energy as being set.

2.5.1 Putting into operation

Pressing the pushbutton on the laser probe starts the issue of trigger pulses and switches over the signal lamps provided that the laser stand-by line is active. Only with the pushbutton being depressed the trigger pulses can reach the pulse recovery circuit.

2.5.2 Pulse recovery

This block consists of a one-shot with its pulse time determining how long the driver switch remains conductive. Triggering with rates higher than can be handled by the laser probe is prevented by a second one-shot that inhibits retriggering while being active.

2.5.3 Laser driver stage

This is basically a capacitor that is being discharged through the laser diode by a switch. Using the appropriate layout yields the current waveform needed. As long as the switch remains conductive the current through the up-converter inductor will increase. At the end of the conductive period determined by one-shot of the pulse recovery this will result in recharging of the capacitor with the energy stored in the inductor.

2.5.4 Trickle charger

At repetition rates below 400 Hz the leakage discharge of the capacitor gets significant so too less energy would remain for the next laser pulse. Therefore this trickle charger which operates in parallel to the switching element in the laser probe periodically restores the energy level between the laser pulses.

2.5.5 Laser test facility

A photo-pindiode is illuminated trough an attenuating window by the laser diode to be measured. The peak value of the resulting diode current is a measure for the intensity of the laser beam. Because the type of the laser diode is known the peak power of the laser pulse can be assessed and shown on the display.

CHAPTER 3 PERFORMANCE CHECK

3.1 Safety inspection

3.1.1 Visual inspection

Passed, when all applicable items are answered with YES.

	yes	no
Is the user manual there?		
Is the casing of the appliance undamaged?		
Is the label well readable?		
Are the controls, display, lights and connectors all right?		
Are the mains input and the equipotentiality busbar all right?		
Are the electrodes, cables and connectors undamaged?		
Are ultrasound therapy, cables and connectors undamaged? (Pay special attention to possible leaks in the treatment heads.)		
Are the labels on the ultrasound treatment heads readable?		
Are the laser probes, cables and connectors undamaged? (Pay attention to scratches on the glass of the laser output (aperture).)		
Are the labels on the laser probes readable?		
Are the laser protection glasses on hand and in good condition?		

3.1.2 Functional test, general

Passed, when all applicable items are answered with YES.

	yes	no
Is the automatic selftest executed successfully at power on?		
Is an error message appearing when the appliance is powered on with the current dose potentiometer turned on?		

3.1.3 Functional test, electrotherapy part

Passed, when all applicable items are answered with YES.

	yes	no
Do the current waveforms and amplitudes correspond with the data in the user manual when measured with an oscilloscope and a 500 Ω load?		
Does the current flow through the right safety connector and the ultrasound treatment head instead of between the two safety connectors when the combination therapy menu is selected?		

3.1.4 Functional test, ultrasound part

Passed, when all applicable items are answered with YES.

		yes	no
Is the appliance adjusted to all treatment heads?	1 cm^2	☐	☐
	4 cm^2	☐	☐
	10 cm^2	☐	☐
Does the ultrasound output correspond with the power displayed on the LCD, for both frequencies at maximum intensity?	1 cm^2	☐	☐
	4 cm^2	☐	☐
	10 cm^2	☐	☐

3.1.5 Functional test, laser part

Passed, when all applicable items are answered with YES.

	yes	no
Does the green light on the probe only burn when the laser is switched on with the key?	☐	☐
Does the yellow light only burn when the laser is selected and the pushbutton is pressed?	☐	☐
Is laser light emitted only when the yellow light is burning?	☐	☐
Is the emitted laser power correct?	☐	☐
Does the displayed power measured with the laser test cell correspond with the emitted laser power?	☐	☐

3.1.6 Test of the electrical safety according to VDE 0751

Parameter	Measured value	Limit	Remarks
Protective earth resistance	Ω	< 0,2 Ω	
Enclosure leakage current	µA	< 1000 µA	
Patient leakage current	µA	< 5000 µA	

3.1.7 Dielectric strength test

These tests need only be executed when repairs have been made in the mains part or in the output circuits.
Passed, when all applicable items are answered with YES.

	yes	no
Does the isolation between the enclosure and the mains withstand 1.5 kV$_{AC}$ during 1 minute or 1.8 kV during 1 second? (appliance not switched on.)	☐	☐
Does the isolation between the enclosure and the current output withstand 1.5 kV$_{AC}$ during 1 second? (appliance not switched on.)	☐	☐

CHAPTER 4 ADJUSTMENT PROCEDURES

4.1 Introduction

Only the adjustment procedures which can be carried out without special training are described in this manual. Other adjustments should not be carried out because of possible safety hazards.

After any repair or printed circuit board (PCB) swap the performance check (chapter 3) has to be carried out. For repairs on the printed circuit boards themselves it is often necessary to carry at (part of) the PCB adjustment procedures. This can only be carried out by Uniphy Service and Production personnel.

4.2 Adjustment of the dose potentiometer guard circuit

For this adjustment you need a voltmeter (DC, 0.2%) and a small screwdriver. This adjustment has to be carried out every time the main board (PCB 792X) or the control board (PCB 791X) are replaced.

Connect the voltmeter to MP20 (GND) and MP21 (Vdose) on the front PCB (791X). Switch the appliance on. Adjust the voltage measured to 4.51 V ± 0.01 V with P10, while the dosage regulator is in the zero position. When this is done, switch off the appliance and remove the voltmeter cables from the measure points.

4.3 Adjustment of the laser power measuring cell

For this adjustment you will need a calibrated laser probe (model 241 or 242), which can be bought from Uniphy. Uniphy will carry out a yearly calibration if wanted. This adjustment has to be carried out every time the control board (PCB 791X) is exchanged.

Turn P11 maximum counter clockwise. Switch on the device and chose application 903 from application list (push the upper black button twice and then the fourth blue button). Connect your calibrated laser probe and turn the key clockwise. Hold the probe tip perpendicular in the middle of the laser test cell and push the button on the probe. Turn P11 clockwise until the measured peak power matches the power of your calibration laser. The 796 will hold the maximum value measured as long as the button on the probe is pressed. Verify the adjustment by releasing the button for a short instance and checking the measured value.

CHAPTER 5 TROUBLE SHOOTING

5.1 Introduction

In this chapter a description is given of the most common error messages and their probable cause.

The following categories of errors are identified:

- Errors during selftest
- Errors during normal use
- Software errors

With a number of errors a special message is displayed explaining in short what the detected problem is. All other errors are displayed in the following manner (the numbers are just an example and change per error):

```
THE PROCESSOR HAS DETECTED AN ERROR
----------------------------------------
Error number  :                 43
Error code    :                  0
Error value   :               0040h
Error address :               1EF4h
----------------------------------------
```

The error numbers, on the line indicated by "Error number:" are described in paragraph 5.4 and 5.5. The numbers at the "Error code:" and "Error value:" lines give in some occasions additional information about the error. The hexadecimal number on the line "Error address:" indicates the program counter position at the occurrence of the error. This is important in case of software errors. In cases the display is (probably) not available the processor will activate the buzzer a number of times, description also later in this chapter.

The selftest checks proper functioning of the safety relay and circuits and is activated every time the unit is switched on. The tests are performed by the microprocessor and lasts for approximately 3 seconds. The current dosage regulator should be in the zero position (maximum counter clock wise). This is checked at regular intervals during the selftest. If the dosage regulator is not at zero an error will be reported (**ERROR 50**) and an error shutdown procedure will be initiated as described below.

The safety relay driver circuitry is accessible to the microprocessor for 3 seconds after power up of the unit. After this period the microprocessor will not be able to switch the safety relay on any more. The control lines used for test purpose only are only accessible by the microprocessor if the dosage regulator is in the zero position as extra precaution against hard- or software errors.

5.2 Error shutdown procedure

The safety circuit will switch off the safety relay directly in the event of an error, thus disconnecting the output from the unit to external connections to avoid danger to the patient.
In addition to this the microprocessor will, if it detects an error either from the safety circuit or otherwise, perform the following actions:

- Safety relay off: Patient circuit disconnected. This is a latched condition that can only be reversed by switching off the unit.
- Dummy relay off: The output is short circuited. (This can only occur if the current dosage regulator is at zero).
- Choppers off: No signal to the output stage (no output current).
- MF-Dac's to zero: No signal to the choppers
- US-Dac to zero: The power supply of the ultrasound output stage is set to minimum.
- US duty cycle off: The ultrasound modulator will be switched off.
- PB-enable off: The laser probe is switched off.
- Laser drip charger off: The laser power supply is switched off.
- Red error-LED on
- Fan on
- An error message is displayed on the LCD screen. In some cases the yellow monitor-LED is pulsed in case the processor has not established communications with the LCD screen yet.

5.3 General test description

The microprocessor gathers its information via digital and analog inputs and these are tested first. Next the current generator and its safety circuits are tested, then the ultrasound generator and the laser generator. Finally some additional simple tests are performed.

In case the unit does not finish the selftest, no error message is displayed, the buzzer is not pulsed and all internal wiring is connected properly the following items are suspect :

- Supplies (mains and other)
- Microcontroller
- Program EPROM
- Address, data or control lines

5.3.1 Microcontroller core test

Any errors found will stop the selftest and an error message will be displayed.

MICROCONTROLLER TEST

The following tests are performed:

1. MF-Error line check. If the MF-error line is in error condition (safety relay switched off) the buzzer will be activated 7 times (**ERROR 57**).
2. The microcontroller arithmetic and logic unit (ALU) check. The controller executes a number of arithmetic operations and compares the calculated value with the correct value. In case of failure the buzzer will be activated 4 times (**ERROR 20, error code 0**).
3. Test of the internal RAM. The controller writes some data to the internal RAM and compares the data read from the RAM with the original data. In case of failure the buzzer will be activated 4 times (**ERROR 20, error code 1**).
4. Test of the external RAM. The RAM is tested for writeabilty and data retention. This also checks address, data and read/write control lines. Incase of a failure the buzzer will be activated 5 times (**ERROR 22**).

5 Program storage test. By means of a checksum test on the first 32k the data integrity of the program stored in EPROM is tested. In case of a failure the buzzer will be activated 6 times (**ERROR 21**).

With the above tests the operation of the microcontroller is tested.

PERIPHERAL TEST

1 Bank switch circuit. The controller will switch on all banks of the EPROM one by one and check a known value in every bank. Incase of a failure the buzzer will be activated 8 times (**ERROR 28**).
2 LCD display. The controller checks if communications with the display controller can be activated. Incase of a failure the buzzer will be activated 11 times fast (**ERROR 41**).
3 I^2C-bus. The controller checks whether all ICs connected to the I^2C-bus are responding. In case of a failure **ERROR 43**, with error value the I^2C-address of the IC that failed. The order of testing is: ultrasound I/O (U6, address 4Ah), front panel I/O (U101, address 46h), keyboard I/O (U400, address 40h), front panel ADC (U102, address 96h). If the fault occurs with the first address as error value (4Ah), this can mean that this particular IC is failing, the microcontroller is failing or the I^2C-link is broken.
4 Internal timers and the internal ADC. The relation between the timer outputs and the clock frequency is tested and the internal ADC. In case of a failure **ERROR 20**, with error code 3, 4 and 5 for a failure in timer 0, 1 and 2 respectively, error code 6 when the ADC is not busy (ADC not started) and error code 7 when the ADC is not ready (conversion takes to long).
5 8155 (I/O-expander). The RAM of the 8155, the timer and the I/O-registers are tested. In case of a failure **ERROR 31**, with error code 0 for a failure in the RAM, 1 till 3 for the I/O-registers and 4 for the timer.
6 8253 (timer). The 3 timers in this IC are tested, in case of a failure **ERROR 32**, with error code 0, 1 and 2 for timer 0, 1 and 2 respectively.
7 A/D-convertor. An reference voltage (Vref, 2.53 V) is converted and checked against a stored value. A conversion result below 2.39 V or above 2.63 V (ADC-values 01E9h and 021Ah) results in **ERROR 37**, with error value the measured ADC-value.
8 Supply voltages +24V, +15V and -15V through a resistive network. If the summing point of the resistive network is below 1.16 V or above 3.47 V (ADC-values 00EDh and 02C6) **ERROR 53** is reported, with error value the measured ADC-value.
9 Reference voltage of the ultrasound and laser dosage potentiometers. The controller tests the reference voltage of the dosage regulators with the I^2C-ADC. If the voltage is below 3.85 V or above 3.85 (ADC-values 03ADh and 0313h) **ERROR 38** is reported, with error value the measured ADC-value.

With the above tests the microcontroller, peripherals, analog inputs and supply voltages have been tested

5.3.2 Test current generator and safety circuit

TEST OF THE INITIAL STATE

The following tests are performed:

1 MF-Error line check. If the MF-errorline is in error condition (safety relay switched off) **ERROR 57** is reported.
2 Dosage regulator at zero, checked by means of the potentiometer switch. If not at zero **ERROR 50** (check cables if the control is at 0 position).
3 Dosage regulator output signal. This should be at or close to 0 V. A voltage above 0.1 V (ADC-value 0014h) results in **ERROR 54**, with error value the measured ADC-value.

4 Initial voltage on the voltage-to-current-converter (V/C-converter). This voltage should be between

6.1 and 8.0 V (on ADC 1.10 and 1.45 V, ADC-values 00E1 and 0128h). When the voltage is out of range **ERROR 60** is reported, with error value the measured ADC-value.

5 Optocoupler test. The voltage returned from the optocouplers for high resistance check (patient circuit resistance) must be between 3.75 V and 4.25 V (ADC-values 02FFh and 0365h) in case there is no output current set. **ERROR 42** will be generated in case this test fails, with error value the measured ADC-value.

After this test the current generator is initialised:

- the DACs are initialised,
- the choppers are set to 40 kHz,
- waveform table 3 (galvanic x sine) is selected,
- the MF frequency is set to 4 kHz.

SAFETY AND DUMMY RELAY TEST

In the following test sequence the safety and dummy relay's are tested for proper functioning. No external (patient) connection should exist during this test. The DAC is programmed in such a way that with a test reference voltage applied via the TEST line approximately 2 mA will flow through the output circuit, if connected either through an external connection or the dummy relay. The voltage level at the tracing series regulator is proportionate to the resistance in the output (patient) circuit with a given current. This level is used to test the output circuit resistance. A voltage on this point below 10.9 V if checking for an open circuit is recognized as an error. A voltage above 8.25 V while testing for a closed circuit is recognized as error.

When the safety relay is energized (on) the contacts are closed. The dummy relay will short circuit the output channel if in energized (on) state.

1 Test if the safety relay is off. A low current (apr. 2 mA) is applied to the output circuit. If a closed circuit is detected (Vmf < 10.9 V, on ADC 1.97 V, ADC-value 0193h) **ERROR 61** will occur, with error value the measured ADC-value.

2 Test if errorline becomes activated if the safety relay is switched on. If the error line is activated within 10 msec it means that the safety circuit has activated it and **ERROR 55** will occur.

3 Test if the safety relay makes contact. With the safety relay on and the dummy relay on a closed circuit should exist. An open circuit (Vmf > 8.25 V, on ADC 1.49 V, ADC-value 0130h) will result in **ERROR 62**, with error value the measured ADC-value.

4 Test for external (patient) connections. When the dummy relay is switched off the output circuit should be open again. A closed circuit indicates an external connection. **ERROR 63** is reported when Vmf is below 10.9 V (1.97 V on ADC, ADC-value 0193h), with error value the measured ADC-value.

5 Test if dummy relay makes contact. After energizing the dummy relay the outputs should be shorted. If Vmf is above 8.25 V (1.49 V on ADC, ADC-value 0130h) **ERROR 64** occurs, with error value the measured ADC-value.

6 Dosage regulator at zero, checked by means of the potentiometer switch. If not at zero **ERROR 50**.

If these tests have passed the safety and dummy relay are functioning and no external connections exist. In the next test the safety relay is tested under full load conditions. The DAC's are programmed for an output current of 110% maximum operating current. At the moment the safety relay is closed the safety circuit should become active immediately, because the dose regulator is in the zero position.

1 Test if the safety relay switches under full load. When the safety relay is switched on, the safety limit check circuits should activate the errorline causing the safety relay to drop off. If the errorline

is not activated within 40 msec **ERROR 65** is generated, with error code 0.

2 Test if the safety relay contacts open. If the above test passes but a closed circuit is detected (Vmf below 20.7 V, on ADC 3.73 V, ADC-value 02FBh) the same error is generated, **ERROR 65**. This time the error code is 1 and the error value the measured ADC-value.

This test completes the verification of the safety relay.

150% SAFETY LIMIT CHECK

In this test sequence the 150% comparator circuits are tested. The safety relay is energized and a closed output circuit is created by switching on the dummy relay. By programming the DAC two currents are generated one representing a value below 150% (1.5 mA) and one above 150% (8 mA). The limit checks are done on each half of the output stage.

1 Test with a current below 150% whether no error condition is generated. If the errorline is activated **ERROR 66** is reported, with error code 0.

2 Test one half of the safety circuit (comparator 1) for 150% limit. If the errorline is not activated with the 150% current **ERROR 66** is generated, with error code 1.

3 Test the other half of the safety circuit (comparator 2) for 150% limit. The error messages is also **ERROR 66**, with error code 2.

This completes the verification of the 150% limit check circuits.

MAXIMUM CURRENT SAFETY LIMIT CHECK

This comparator checks for currents above the maximum allowable output current and should report an error if the output current rises above 110% of the maximum allowable. The maximum current is simulated by test lines connected to the comparator network.

1 Simulate normal current with test lines TST2. If the errorline is activated **ERROR 67** will be generated, with error code 0. This also checks whether the 11 kΩ input resistors are installed.

2 Simulate 110% current with TST1. If the errorline is not activated **ERROR 67** is generated, with error code 1.

This completes the maximum current safety limit check.

OTHER TESTS OF THE CURRENT GENERATOR

1 Test of the dose regulator guard circuit. Test line TST0 is activated, if the errorline is not activated within 3 msec **ERROR 56** is generated.

2 Dosage regulator at zero, checked by means of the potentiometer switch. If not at zero **ERROR 50**.

After these tests all test lines deactivated, the short circuit relay is switched off and the safety relay on.

5.3.3 Test ultrasound generator

TEST OF THE HEAD TYPES

The microcontroller verifies whether the voltages indicating the type of ultrasound treatment head connected are within the following ranges:

Small head:	0.88 .. 1.48V,	ADC-value: 00B4h .. 012Eh
Large head:	2.20 .. 2.80V,	ADC-value: 01C2h .. 023Ch
Extra large head:	3.48 .. 4.08V,	ADC-value: 03EAh .. 03FFh
No head:	4.90 .. 5.00V,	ADC-value: 03EAh .. 03FFh

If one of the voltages (HDtyp1 or HDtyp2) is not within one of these ranges, **ERROR 70** is generated, with error code 1 or 2 (1 is the left connector, 2 the right connector) and the error value is the measured ADC-value.

TEST OF THE HEAD TEMPERATURE

The microcontroller verifies whether the voltage that indicates the temperature of the treatment head is within the range of 2.16 till 4.08V (ADC-value 01B9h .. 0342h) when a head is connected and 4.96 .. 5.00V (ADC-value 03F6h .. 03FFh) when there is no head connected. When one of the voltages (HDtemp1 or HDtemp2) is out of range, you will get **ERROR 71**, with error code 1 or 2 (1 is the left connector, 2 the right connector) and the error value is the measured ADC-value.

TEST OF THE ULTRASOUND POWER SUPPLY

Test of the minimum supply voltage

The ultrasound DAC is already in the minimum position. The voltage Vsnsus is measured, if this voltage is greater than 0.39V (ADC-value 004Fh) you will get **ERROR 72**, with error code 0.

Test of the maximum supply voltage

The ultrasound DAC is loaded with 235. The voltage Vsnsus should be greater than 4.71V (ADC-value 03C3h) after 40 msec. If not then you will get **ERROR 72**, with error code 255.

Test of the duty-cycle modulator

The duty-cycle is switched off (DC 1:0) and the voltage V_{usi} is measured. When this voltage is above 0.05V **ERROR 74** is generated and the error value is the measured ADC-value.

Test whether the supply voltage decreases fast enough

The ultrasound power supply is set to minimum voltage again with the ultrasound DAC. The ultrasound power stage is switched on to decharge C6 and C7. When the voltage Vsnsus is not decrease below 3.53V (ADC-value 02D2h) within 200 msec you will get **ERROR 72**, with error code 100. There is another delay of 200 msec before the power stage is switched off again.

TEST OF THE ULTRASOUND SAFETY SYSTEM

1 The ultrasound power supply is in the minimum position. When the ultrasound error line (ERRORus) is active you will get **ERROR 73**, with error code 1.

2 The test line (TST4) is activated. When the ultrasound error line (ERRORus) is activated within 5 msec you will get **ERROR 73**, with error code 2. The test line TST4 is deactivated again.

3 The ultrasound power supply voltage (Vddus) is set to 18.2V. Then there is a 20 msec delay to make sure that the supply voltage is stabilised. Then test line TST4 is activated again. When the error line (ERRORus) is activated within 5 msec you will get **ERROR 73**, with error code 3. Again the test line (TST4) is deactivated.

4 The ultrasound power supply voltage (Vddus) is increased to 22.2V. After a delay of 10 msec the test line TST4 is activated. When the error line (ERRORus) is not activated within 5 msec you will get **ERROR 73**, with error code 4.

5 Finally the supply is set to minimum voltage, the test line TST4 is deactivated and the ultrasound power stage is switched on for 100 msec. When the error line (ERRORus) is still active you will get **ERROR 73**, with error code 5.

5.3.4 Test laser generator

TEST OF THE PROBE TYPES

The microcontroller verifies whether the voltages indicating the type of laser probe connected are within the following ranges:

Model 241: 0.43 .. 0.62V, ADC-values 0057h .. 007Eh
Model 242: 0.72 .. 1.03V, ADC-values 0093h .. 00D2h
No probe : 4.90 .. 5.00V, ADC-values 03EAh .. 03FFh

If one of the voltages (PBtyp1 or PBtyp2) is not within one of these ranges, **ERROR 70** will be generated, with error code 1 or 2 (1 is the left connector, 2 the right connector) and the error value is the measured ADC-value.

TEST WHETHER THE LASER IS INACTIVE

When a laser probe is connected, the controller checks whether the key is turned on and the button on the laser probe is pressed as well. In this case **ERROR 81** is generated, with error code 1 or 2 (1 is the left connector, 2 the right connector).

TEST OF THE VOLTAGE OF THE LASER TEST CELL

The controller checks whether the voltage of the laser test cell is below 0.1 V (ADC-value 0014h). If not **ERROR 82** is reported, and the error value is the measured ADC-value.

5.3.5 Other tests

A checksum test of the EPROM is executed for the non-tested banks 1, 2 and 3. If an error is found **ERROR 21** is reported with an error code equivalent to the bank found at fault. The error value is the calculated checksum for the bank concerned.

A test is performed at a specific location of the battery backed up RAM. If the data in this location does not conform with the test value the RAM has lost data. The message following message will be shown:"THE DEFAULT MEMORY IS NOT OK, check the back-up battery, data in memory lost."

Serial bus test. If a test connector (or another serial device), looping the output signal back to the input, is connected to the serial communication port the message: 'Serial device connected' is displayed if the test passes. No message will be displayed if the test fails or if no test connector is installed !!

5.4 Error numbers summary

Software

10	RANGE_ERR	Range error
11	CALL_ERR	Call error
12	TILT_ERR	Tilt error

Microcontroller

20	PROC_ERR	Controller error
21	EPROM_ERR	EPROM checksum error
22	ERAM_ERR	External RAM
28	BANK_ERR	Bankswitch error
29	MEM_ERR	Memory error

Peripherals

31	_8155_ERR	81C55 error
32	_8253_ERR	82C53 error
33	I2C_ERR	I^{2}C error
37	ADC_VREF_ERR	Reference voltage internal ADC error
38	POTREF_ERR	Reference voltage US/LS-dose error

40	ADC_TIMEOUT	ADC time out
41	LCD_TIMEOUT	LCD time out
42	OC_ERR	Optocoupler error
43	I2C_TIMEOUT	I^{2}C time out
44	KEYBOARD_ERR	Keyboard error
45	BININ_ERR	Instable digital signal
49	INT_ILLEGAL	Illegal interrupt

Safety circuit current generator

50	POTMET_ERR	Dose regulator not in 0-position
51	ERRORMF_ERR	MF-errorline active
53	POWER_ERR	Sum supply voltages error
54	POTADC_ERR	Dose regulator voltage not 0 Volt
55	ERRACT_ERR	MF-errorline does not become inactive
56	POTGUARD_ERR	Dose regulator guard circuit error
57	NOERRORMF_ERR	MF-errorline inactive at power-on
58	VTEMP_ERR	Measured temperature too high
59	MFPOT_ERR	Switch of the current intensity control is defective
60	UI_ERR	V/C converter error
61	RELPOS_ERR	Relay in wrong position
62	RELSWITCH_ERR	Relay doesn't switch
63	PAT_ERR	Patient connected
64	SHORT_ERR	Short circuit relay error
65	RELMAX_ERR	Safety relay doesn't operate at max. current
66	LIM150_ERR	150% limit circuit error
67	LIMMAX_ERR	Maximum current limit error

Ultrasound errors

70	HDTYPE_ERR	Unknown head type
71	HDTEMP_ERR	Head temperature error
72	VSNSUS_ERR	Ultrasound power supply error
73	US_ERR	General ultrasound error
74	VUSI_ERR	V_{usi} greater than 0 Volt at duty-cycle 1:0
79	USPOT_ERR	Switch of ultrasound intensity control is defective

Laser errors

80	PBTYPE_ERR	Unknown probe type
81	PBACT_ERR	Probe active
82	LSEYE_ERR	Laser test cell voltage error
83	LS_ERR	General laser error
89	LSPOT_ERR	Switch of laser dosage control is defective

5.5 Error descriptions

Nr	Name	Description	Code	Value	Addr.
1. Software errors					
10	RANGE_ERR	Range error:			
		?	0		
		parameter number	1	parnr	
		command number	2	cmdnr	
		menu number	3	mnunr	
		screen number	4	scrnr	
		window number	5	winnr	
		program number	6	prgnr	
11	CALL_ERR	Call error			
12	TILT_ERR	Tilt error			

2. Microcontroller errors					
20	PROC_ERR	Controller error:			
	4*	cpu	0		
	4*	internal RAM	1		
		internal SFR	2		
		internal timer 0	3	counter	
		internal timer 1	4	counter	
		internal timer 2	5	sample/counter	
		internal ADC not busy	6	ADCON	
		internal ADC not ready	7	ADCON	

Nr	Name	Description	Code	Value	Addr.
21	EPROM_ERR 6*	EPROM checksum error	bank	calculated checksum	
22	ERAM_ERR 5*	external RAM error		error address	
28	BANK_ERR 8*	Bankswitch error	bank	PSW	
29	MEM_ERR	Memory error ? PatMem DefMem SysMem PrgMem	 0 1 2 3 4		
3. Peripherals (during selftest)					
31	_8155_ERR	81C55 error: RAM port A port B port C timer	 0 1 2 3 4	 byte read byte read byte read byte read counter	 error addr.
32	_8253_ERR	82C53 error: timer 0 timer 1 timer 2	 0 1 2	 counter counter counter	
33	I2C_ERR	I²C error: keyboard (KB) front panel (FP) ultrasound (US) dose (DS)		 40h 46h 4Ah 96h	
37	ADC_VREF_ ERR	Reference voltage internal ADC error	0	Vref2 (ADC)	
38	POTREF_ERR	Reference voltage US/LS-dose error		VPOTref (ADC)	

4. Peripherals (during normal operation)					
40	ADC_TIMEOUT	ADC time out			
41	LCD_TIMEOUT 11*	LCD time out			
42	OC_ERR	Optocoupler error		OCdet (ADC)	
43	I2C_TIMEOUT	I²C time out (0=send,1=receive) keyboard (KB) front panel (FP) ultrasound (US) dose (DS)	0/1	 40h 46h 4Ah 96h	
44	KEYBOARD_ERR	Keyboard error	0	sent / received	
45	BININ_ERR	Instable digital signal	0	number low/high	function
49	INT_ILLEGAL	Illegal interrupt			vector

5. and 6. Safety circuit current generator					
50	POTMET_ERR	Dose regulator not in zero position			
51	ERRORMF_ERR	MF-error line active			
53	POWER_ERR	Supply voltage sum error		Vsum (ADC)	
54	POTADC_ERR	Dose regulator voltage not 0 V		VPOTmf (ADC)	
55	ERRACT_ERR	MF-error line cannot be deactivated			
56	POTGUARD_ERR	Dose regulator guard error			
57	NOERRORMF_ERR	MF-error line inactive at poweron			
58	VTEMP_ERR	Temperature much too high		Vtemp (ADC)	
59	MFPOT_ERR	Switch of intensity regulator defective	0	VPOTmf (ADC)	
60	UI_ERR	V/C converter error		Vmf (ADC)	
61	RELPOS_ERR	Safety relay in wrong position			
62	RELSWITCH_ERR	Safety relay cannot switch		Vmf (ADC)	
63	PAT_ERR	Patient connected		Vmf (ADC)	

64	SHORT_ERR	Short circuit relay error		Vmf (ADC)	
65	RELMAX_ERR	Safety relay doesn't switch at maximum current			
		safety circuit doesn't activate	0		
		safety relay doesn't switch off	1	Vmf (ADC)	
66	LIM150_ERR	150% limit circuit error			
		MF-error line active	0		
		comparator 1 doesn't work	1		
		comparator 2 doesn't work	2		
67	LIMMAX_ERR	Maximum current limit error			
		comparator switches too soon	0		
		comparator doesn't work	1		

7. Ultrasound generator					
70	HDTYPE_ERR	Unknown head type	L/R	HDtyp* (ADC)	
71	HDTEMP_ERR	Head temperature error	L/R	HDtemp (ADC)	
72	VSNSUS_ERR	Ultrasound supply error			
		Vddus not stable within 1.0s (t/10 s)	≤100	Vsnsus (ADC)	
		DAC=0: Vddus> 2.0V	0	Vsnsus (ADC)	
		DAC=235: Vddus<24.0V	255	Vsnsus (ADC)	
		Vddus > 18.0V after 0.2s (t/100-1 s)	≤200	Vsnsus (ADC)	
73	US_ERR	General ultrasound error			
		DAC=0: ERRORus already active	1	port US	
		TST4=1: ERRORus active	2	port US	
		ERRORus active at Vddus1	3	port US	
		ERRORus not active at Vddus2	4	port US	
		TST4=0: ERRORus active	5	port US	
74	VUSI_ERR	Vusi > 0 V at duty-cycle 1:0	0		
79	USPOT_ERR	Switch of ultrasound intensity regulator is defective	0	VPOTus (ADC)	

8. Laser generator

80	PBTYPE_ERR	Probe type unknown	L/R	PBtyp* (ADC)	
81	PBACT_ERR	PbAct active during test	L/R		
82	LSEYE_ERR	Voltage laser test cell error		LASeye (ADC)	
83	LS_ERR	General laser error			
89	LSPOT_ERR	Switch of laser dosage regulator defective	0	VPOTlas (ADC)	

CHAPTER 6 CIRCUIT DIAGRAMS

Overview of the circuit diagrams:

Sheet 7	Wiring diagram
Sheet 9	Main PCB 7925
Sheet 10	Microcontroller core
Sheet 11	I/O Expander
Sheet 12	Waveform synthesis
Sheet 13	V/I Converter
Sheet 14	Safety
Sheet 15	Controls & rectifier
Sheet 16	Outputs
Sheet 17	Console
Sheet 18	US control
Sheet 20	Probe driver
Sheet 21	Mains supply
Sheet 21b	RFI-filter mains inlet
Sheet 22	Backlight converter
Sheet 23	US treatment head
Sheet 24	Laser probe
Sheet 26	Connector definition
Sheet 27	Semiconductor pin-outs
Sheet 28	Layout front PCB
Sheet 29	Layout main PCB
Sheet 31	Layout probes
Sheet 32	Component index
Sheet 33	Label cross reference

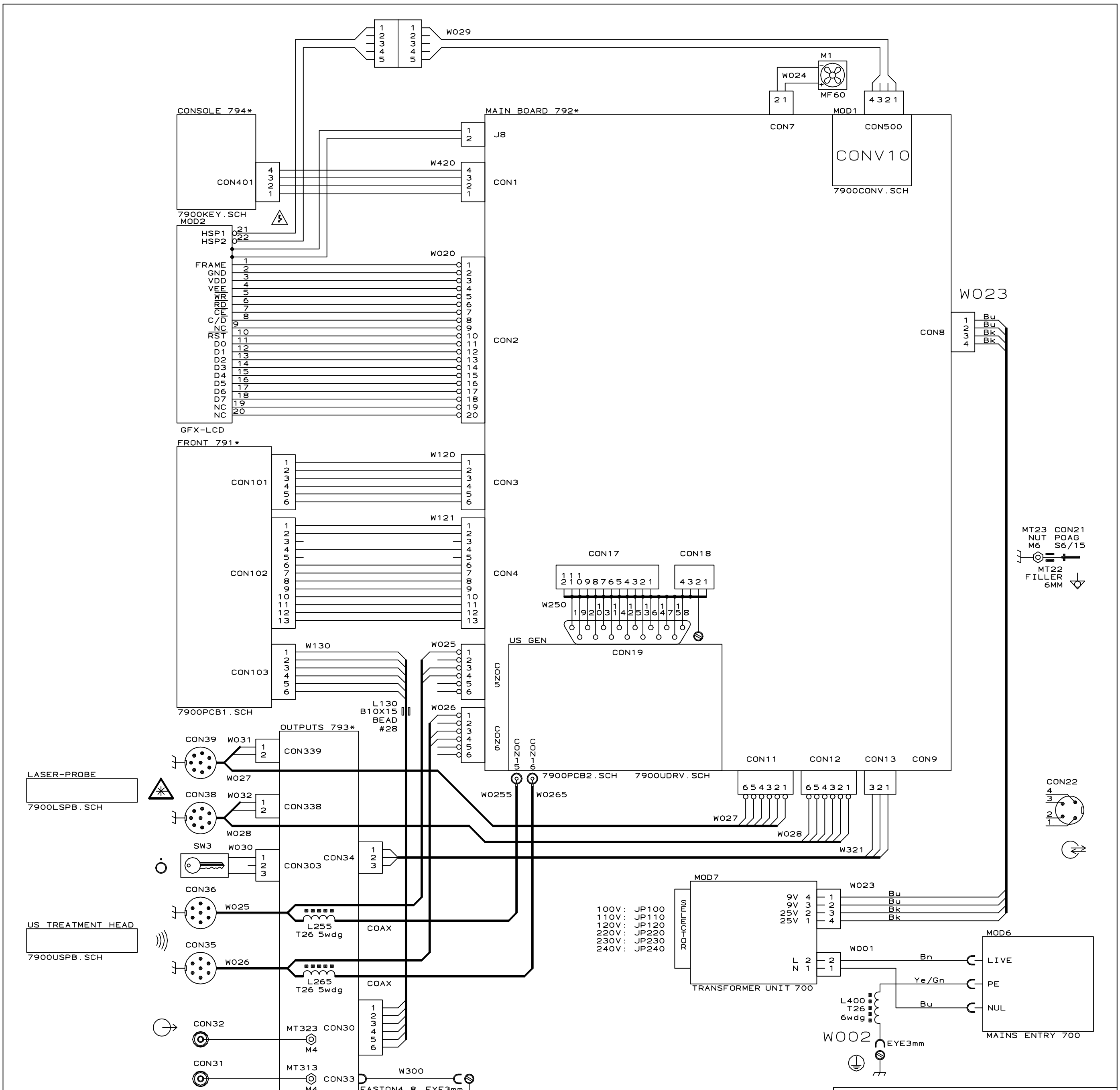
W029
1 2 3 4 5
M1
W024
MF60
21
4321
CON7
MOD1
CON500
CONV10
7900CONV.SCH
CONSOLE 794*
CON401
4 3 2 1
7900KEY.SCH
MAIN BOARD 792*
J8
W420
CON1
MOD2
HSP1
HSP2
21
22
W020
FRAME
GND
VDD
VEE
WR
RD
CE
C/D
NC
RST
D0
D1
D2
D3
D4
D5
D6
D7
NC
NC
CON2
GFX-LCD
W023
Bu
Bu
Bk
Bk
CON8
FRONT 791*
CON101
W120
CON3
CON102
W121
CON4
MT23 CON21
NUT POAG
M6 S6/15
MT22
FILLER
6MM
CON17
CON18
111
210987654321
4321
W250
19 20 3 14 2 5 3 6 4 7 5 8
US GEN
CON19
CON103
W130
W025
CON5
L130
B10X15
BEAD
#28
W026
CON6
OUTPUTS 793*
CON39
W031
CON339
CON15
CON16
7900PCB2.SCH
7900UDRV.SCH
CON11
CON12
CON13
CON9
654321
654321
321
CON22
7900PCB1.SCH
LASER-PROBE
7900LSPB.SCH
W027
CON38
W032
CON338
W0255
W0265
W028
W027
W028
W321
SW3
W030
CON303
CON34
CON36
W025
L255
T26 5wdg
COAX
US TREATMENT HEAD
7900USPB.SCH
CON35
W026
L265
T26 5wdg
COAX
MOD7
SELECTOR
100V: JP100
110V: JP110
120V: JP120
220V: JP220
230V: JP230
240V: JP240
9V 4
9V 3
25V 2
25V 1
W023
Bu
Bu
Bk
Bk
L 2
N 1
W001
Bn
Ye/Gn
Bu
TRANSFORMER UNIT 700
MOD6
LIVE
PE
NUL
MAINS ENTRY 700
L400
T26
6wdg
W002
EYE3mm
CON32
MT323
M4
CON30
CON31
MT313
M4
CON33
W300
FASTON4.8
EYE3mm
79000UT.SCH

Property of: UNIPHY B.V. THE NETHERLANDS Drawn by: N.H. Beun Approval:		
Title 790 WIRING DIAGRAM		
Size C	Document Number 7900WIR.SHT	REV D
Date: October 9, 1998	Sheet 7 of	38

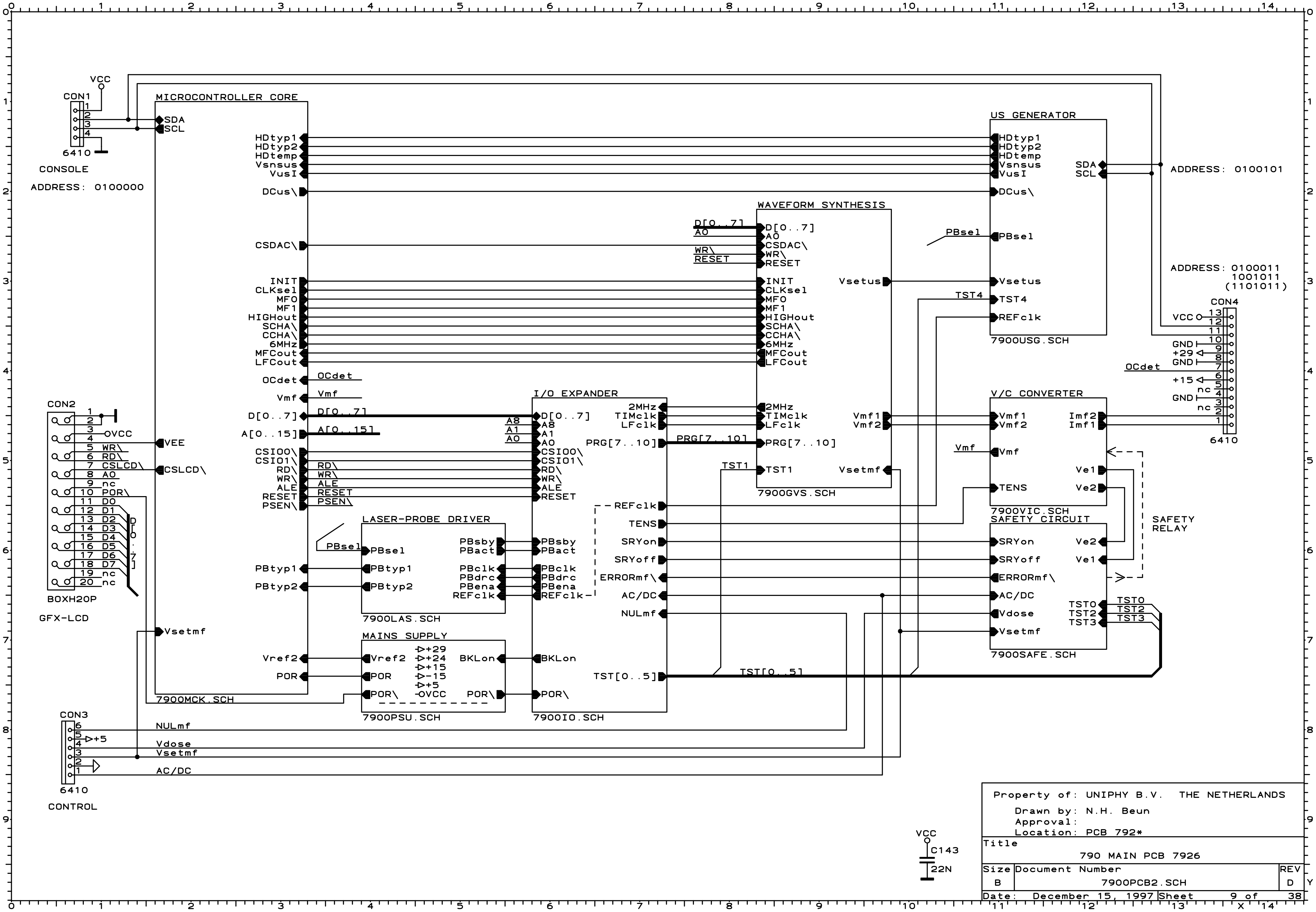
CON1
VCC
6410
CONSOLE
ADDRESS: 0100000
MICROCONTROLLER CORE
SDA
SCL
HDtyp1
HDtyp2
HDtemp
Vsnsus
VusI
DCus\
CSDAC\
INIT
CLKsel
MF0
MF1
HIGHout
SCHA\
CCHA\
6MHz
MFCout
LFCout
OCdet
Vmf
D[0..7]
A[0..15]
CSIO0\
CSIO1\
RD\
WR\
ALE
RESET
PSEN\
VEE
CSLCD\
PBsel
PBtyp1
PBtyp2
Vsetmf
Vref2
POR
7900MCK.SCH
CON2
0VCC
nc
POR\
D0
D1
D2
D3
D4
D5
D6
D7
D[0..7]
BOXH20P
GFX-LCD
US GENERATOR
7900USG.SCH
Vsetus
TST4
REFclk
ADDRESS: 0100101
ADDRESS: 0100011
1001011
(1101011)
CON4
GND
+29
+15
6410
WAVEFORM SYNTHESIS
A0
7900GVS.SCH
2MHz
TIMclk
LFclk
PRG[7..10]
TST1
Vmf1
Vmf2
Vsetmf
I/O EXPANDER
A8
A1
REFclk
TENS
SRYon
SRYoff
ERRORmf\
AC/DC
NULmf
BKLon
TST[0..5]
7900IO.SCH
V/C CONVERTER
Imf2
Imf1
Ve1
Ve2
7900VIC.SCH
SAFETY CIRCUIT
SAFETY RELAY
Vdose
TST0
TST2
TST3
7900SAFE.SCH
LASER-PROBE DRIVER
PBsby
PBact
PBclk
PBdrc
PBena
7900LAS.SCH
MAINS SUPPLY
+29
+24
+15
-15
+5
0VCC
7900PSU.SCH
CON3
6410
CONTROL
C143
22N

Property of: UNIPHY B.V. THE NETHERLANDS

Drawn by: N.H. Beun
Approval:
Location: PCB 792*

Title
790 MAIN PCB 7926

Size	Document Number	REV
B	7900PCB2.SCH	D

Date: December 15, 1997 Sheet 9 of 38

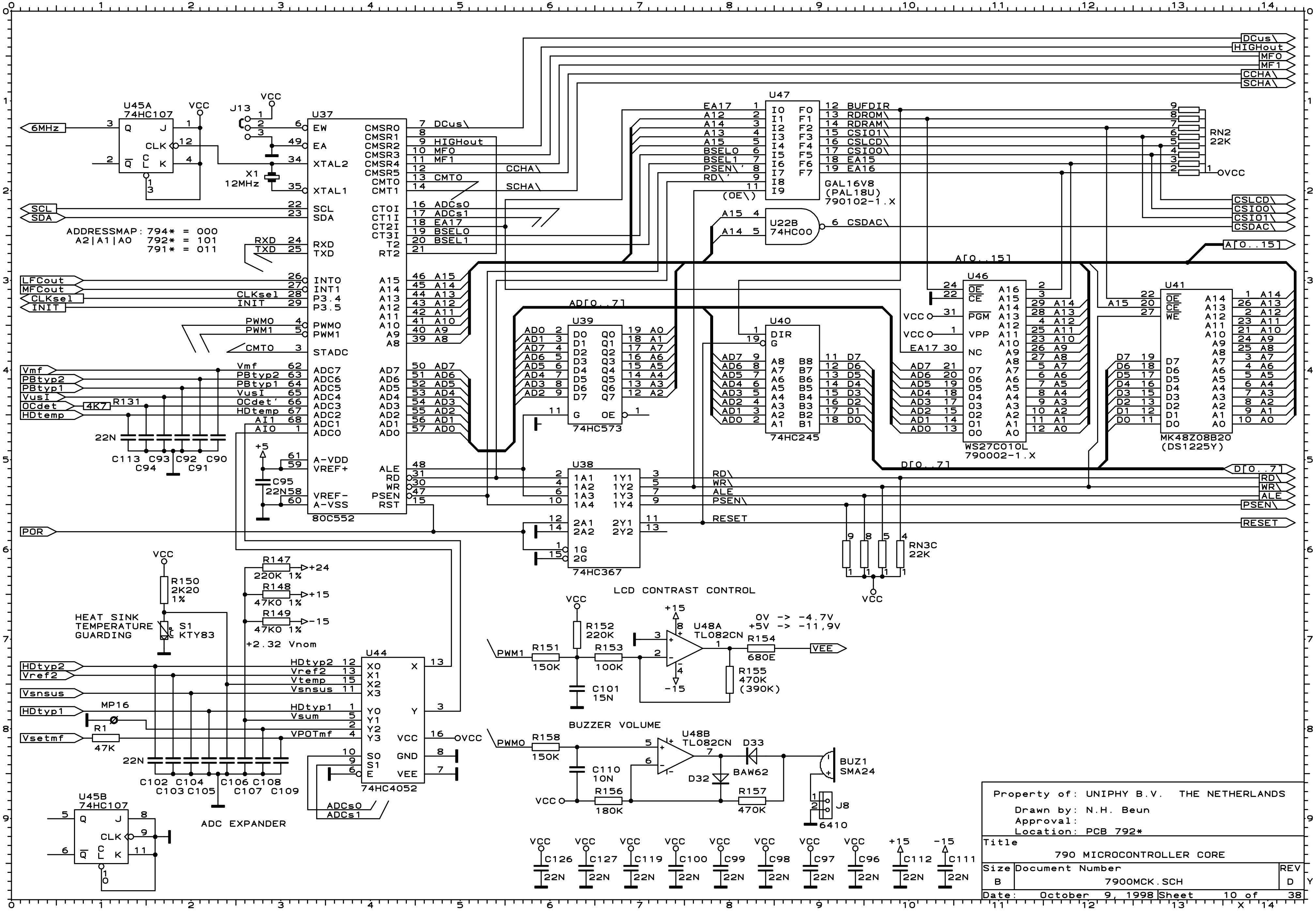
U45A 74HC107
6MHz
VCC
J13
U37
80C552
EW
EA
XTAL2
XTAL1
X1 12MHz
SCL
SDA
ADDRESSMAP: 794* = 000
A2|A1|A0 792* = 101
791* = 011
RXD
TXD
LFCout
MFCout
CLKsel
INIT
PWM0
PWM1
CMT0
STADC
Vmf
PBtyp2
PBtyp1
VusI
OCdet
HDtemp
4K7 R131
22N
C113 C93 C92 C90
C94 C91
AI1
AI0
+5
C95 22N
A-VDD
VREF+
VREF-
A-VSS
POR
CMSR0 CMSR1 CMSR2 CMSR3 CMSR4 CMSR5
CMT0 CMT1
CT0I CT1I CT2I CT3I
T2 RT2
DCus\
HIGHout
MF0
MF1
CCHA\
SCHA\
ADCs0
ADCs1
EA17
BSEL0
BSEL1
ALE RD WR PSEN RST
U47
GAL16V8 (PAL18U) 790102-1.X
BUFDIR
RDROM\
RDRAM\
CSIO1\
CSLCD\
CSIO0\
EA15
EA16
(OE\)
RN2 22K
OVCC
CSLCD\
CSIO0\
CSIO1\
CSDAC\
U22B 74HC00
A[0..15]
AD[0..7]
U39 74HC573
U40 74HC245
DIR
U46
WS27C010L 790002-1.X
OE CE PGM VPP NC
U41
MK48Z08B20 (DS1225Y)
OE CE WE
D[0..7]
U38 74HC367
RD\
WR\
ALE
PSEN\
RESET
RN3C 22K
VCC
R147 220K 1% +24
R148 47K0 1% +15
R149 47K0 1% -15
+2.32 Vnom
R150 2K20 1%
HEAT SINK TEMPERATURE GUARDING
S1 KTY83
HDtyp2
Vref2
Vtemp
Vsnsus
HDtyp1
Vsum
VPOTmf
Vsetmf
MP16
R1 47K
22N
C102 C104 C106 C108
C103 C105 C107 C109
U44 74HC4052
ADC EXPANDER
U45B 74HC107
LCD CONTRAST CONTROL
PWM1
R151 150K
R152 220K
R153 100K
C101 15N
U48A TL082CN
0V -> -4.7V
+5V -> -11,9V
R154 680E
VEE
R155 470K (390K)
BUZZER VOLUME
PWM0
R158 150K
C110 10N
R156 180K
U48B TL082CN
D33
D32
BAW62
R157 470K
BUZ1 SMA24
J8
6410
C126 C127 C119 C100 C99 C98 C97 C96 C112 C111
22N

Property of: UNIPHY B.V. THE NETHERLANDS

Drawn by: N.H. Beun
Approval:
Location: PCB 792*

Title		
790 MICROCONTROLLER CORE		
Size	Document Number	REV
B	7900MCK.SCH	D
Date: October 9, 1998	Sheet 10 of 38	

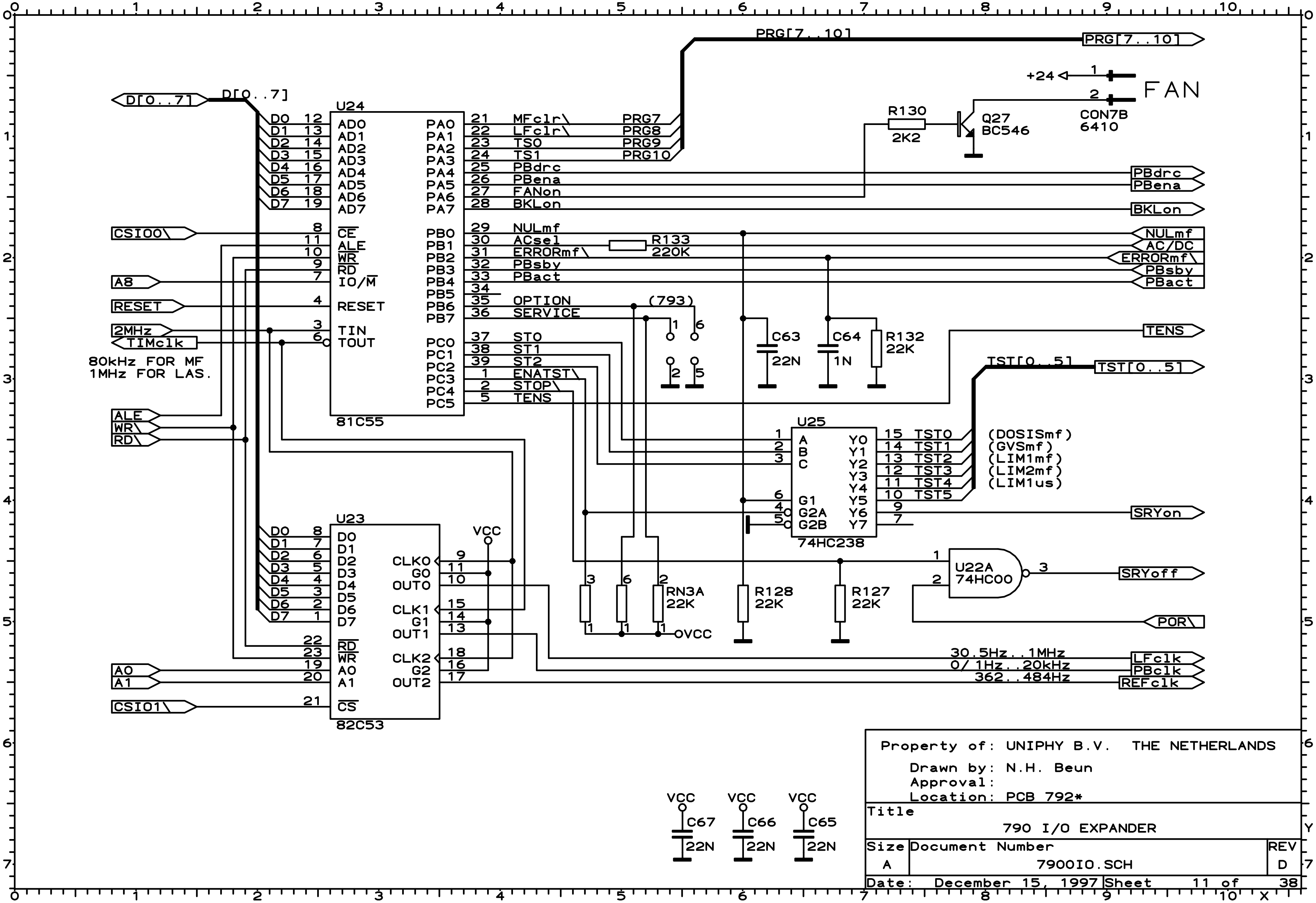
PRG[7..10]
D[0..7]
U24
81C55
D0 12 AD0
D1 13 AD1
D2 14 AD2
D3 15 AD3
D4 16 AD4
D5 17 AD5
D6 18 AD6
D7 19 AD7
CSI00\ 8 CE
11 ALE
10 WR
9 RD
A8 7 IO/M
RESET 4 RESET
2MHz 3 TIN
TIMclk 6 TOUT
80kHz FOR MF
1MHz FOR LAS.
PA0 21 MFclr\ PRG7
PA1 22 LFclr\ PRG8
PA2 23 TS0 PRG9
PA3 24 TS1 PRG10
PA4 25 PBdrc
PA5 26 PBena
PA6 27 FANon
PA7 28 BKLon
PB0 29 NULmf
PB1 30 ACsel
PB2 31 ERRORmf\
PB3 32 PBsby
PB4 33 PBact
PB5 34
PB6 35 OPTION
PB7 36 SERVICE
PC0 37 ST0
PC1 38 ST1
PC2 39 ST2
PC3 1 ENATST\
PC4 2 STOP\
PC5 5 TENS
R130 2K2
Q27 BC546
+24 1
2
FAN
CON7B 6410
PBdrc
PBena
BKLon
R133 220K
NULmf
AC/DC
ERRORmf\
PBsby
PBact
(793)
1 6 2 5
C63 22N
C64 1N
R132 22K
TENS
TST[0..5]
U25
74HC238
1 A
2 B
3 C
6 G1
4 G2A
5 G2B
Y0 15 TST0 (DOSISmf)
Y1 14 TST1 (GVSmf)
Y2 13 TST2 (LIM1mf)
Y3 12 TST3 (LIM2mf)
Y4 11 TST4 (LIM1us)
Y5 10 TST5
Y6 9 SRYon
Y7 7
ALE
WR\
RD\
U23
82C53
D0 8
D1 7
D2 6
D3 5
D4 4
D5 3
D6 2
D7 1
22 RD
23 WR
A0 19 A0
A1 20 A1
CSI01\ 21 CS
VCC
CLK0 9
G0 11
OUT0 10
CLK1 15
G1 14
OUT1 13
CLK2 18
G2 16
OUT2 17
RN3A 22K
3 6 2
1 1 1 VCC
R128 22K
R127 22K
U22A 74HC00
1 2 3
SRYoff
POR\
30.5Hz..1MHz LFclk
0/ 1Hz..20kHz PBclk
362..484Hz REFclk
VCC C67 22N
VCC C66 22N
VCC C65 22N
0 1 2 3 4 5 6 7 8 9 10
0 1 2 3 4 5 6 7
X Y

Property of: UNIPHY B.V. THE NETHERLANDS

Drawn by: N.H. Beun
Approval:
Location: PCB 792*

Title		
	790 I/O EXPANDER	
Size	Document Number	REV
A	7900IO.SCH	D
Date: December 15, 1997	Sheet 11 of 38	

Waveform Synthesiser

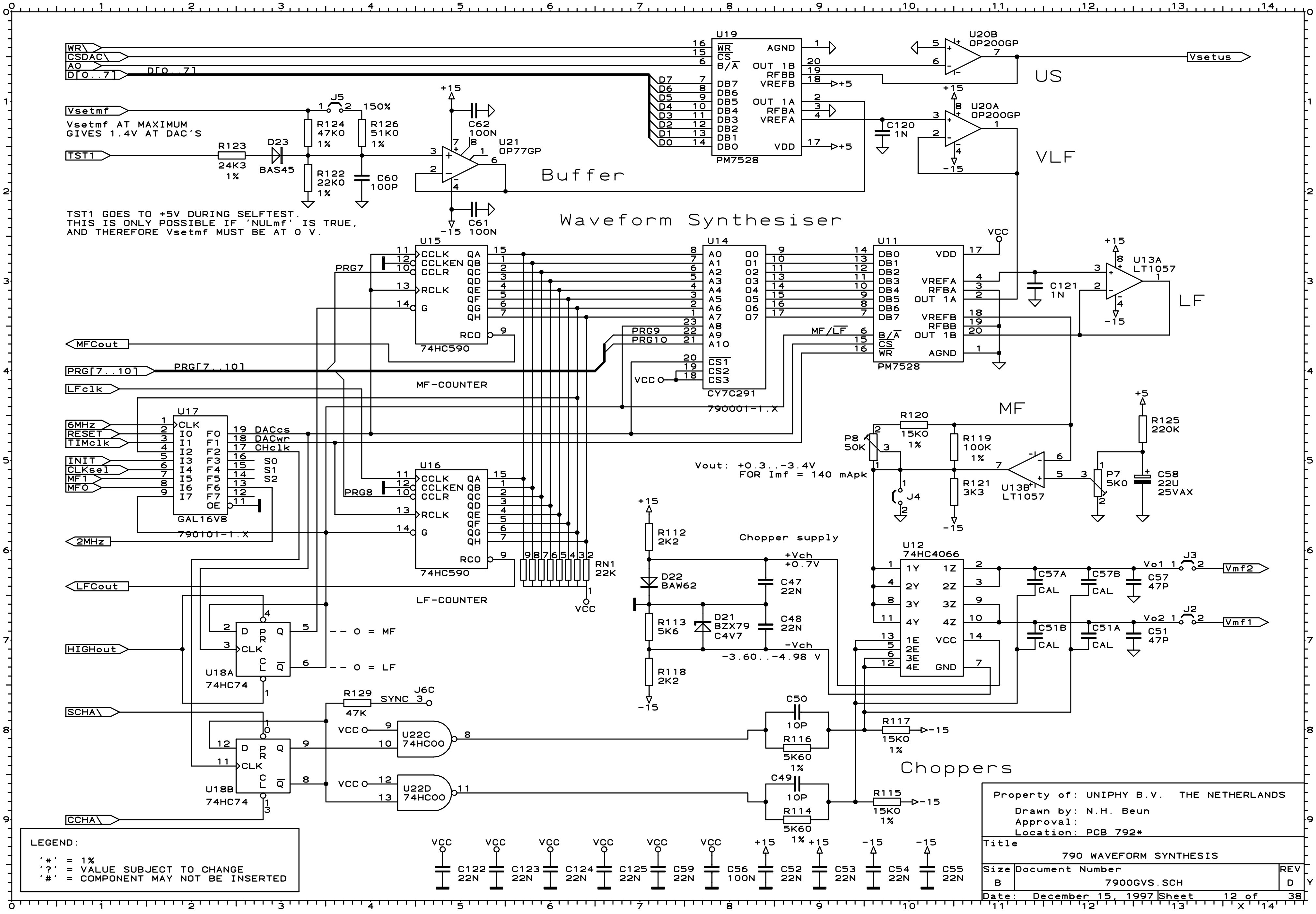
Buffer
US
VLF
LF
MF
Choppers
MF-COUNTER
LF-COUNTER
WR\
CSDAC\
A0
D[0..7]
Vsetmf
TST1
MFCout
PRG[7..10]
LFclk
6MHz
RESET
TIMclk
INIT
CLKsel
MF1
MF0
2MHz
LFCout
HIGHout
SCHA\
CCHA\
Vsetus
Vmf2
Vmf1
U19 PM7528
U20B OP200GP
U20A OP200GP
U21 OP77GP
U15 74HC590
U16 74HC590
U14 CY7C291 790001-1.X
U11 PM7528
U13A LT1057
U13B LT1057
U17 GAL16V8 790101-1.X
U12 74HC4066
U18A 74HC74
U18B 74HC74
U22C 74HC00
U22D 74HC00
J5 150%
R124 47K0 1%
R126 51K0 1%
R123 24K3 1%
D23 BAS45
R122 22K0 1%
C60 100P
C62 100N
C61 100N
C120 1N
C121 1N
R120 15K0 1%
R119 100K 1%
R121 3K3
P8 50K
P7 5K0
R125 220K
C58 22U 25VAX
J4
RN1 22K
R112 2K2
D22 BAW62
C47 22N
R113 5K6
D21 BZX79 C4V7
C48 22N
R118 2K2
+Vch +0.7V
-Vch -3.60..-4.98 V
C57A CAL
C57B CAL
C57 47P
C51B CAL
C51A CAL
C51 47P
J3
J2
Vo1
Vo2
R129 47K
J6C SYNC 3
C50 10P
R116 5K60 1%
R117 15K0 1%
C49 10P
R114 5K60 1%
R115 15K0 1%
DACcs
DACwr
CHclk
S0
S1
S2
PRG7
PRG8
PRG9
PRG10
MF/LF
C122 22N
C123 22N
C124 22N
C125 22N
C59 22N
C56 100N
C52 22N
C53 22N
C54 22N
C55 22N
VCC
+15
-15
+5

Vsetmf AT MAXIMUM
GIVES 1.4V AT DAC'S

TST1 GOES TO +5V DURING SELFTEST.
THIS IS ONLY POSSIBLE IF 'NULmf' IS TRUE,
AND THEREFORE Vsetmf MUST BE AT 0 V.

Vout: +0.3..-3.4V
FOR Imf = 140 mApk

Chopper supply

-- 0 = MF

-- 0 = LF

LEGEND:

'*' = 1%
'?' = VALUE SUBJECT TO CHANGE
'#' = COMPONENT MAY NOT BE INSERTED

Property of: UNIPHY B.V. THE NETHERLANDS
Drawn by: N.H. Beun
Approval:
Location: PCB 792*

Title
790 WAVEFORM SYNTHESIS

Size	Document Number	REV
B	7900GVS.SCH	D

Date: December 15, 1997 Sheet 12 of 38

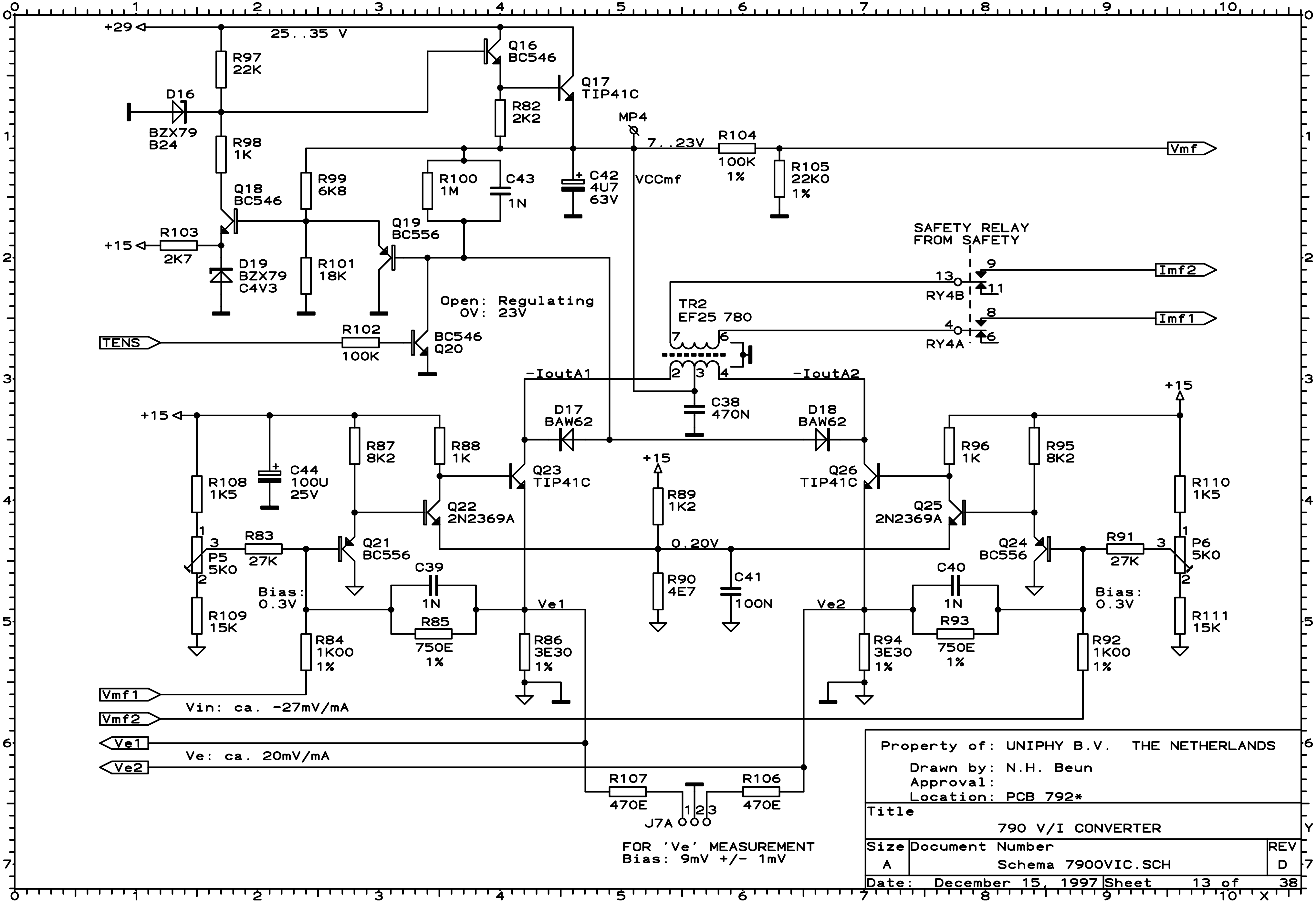
+29
25..35 V
R97 22K
D16 BZX79 B24
R98 1K
Q16 BC546
Q17 TIP41C
R82 2K2
MP4
7..23V
R104 100K 1%
R105 22K0 1%
Vmf
R99 6K8
R100 1M
C43 1N
C42 4U7 63V
VCCmf
Q18 BC546
R103 2K7
+15
D19 BZX79 C4V3
R101 18K
Q19 BC556
SAFETY RELAY FROM SAFETY
13
9
11
RY4B
Imf2
TR2 EF25 780
4
8
6
RY4A
Imf1
7
6
2
3
4
TENS
R102 100K
BC546 Q20
-IoutA1
-IoutA2
D17 BAW62
C38 470N
D18 BAW62
+15
+15
R87 8K2
R88 1K
C44 100U 25V
Q23 TIP41C
+15
R89 1K2
Q26 TIP41C
R96 1K
R95 8K2
R108 1K5
R110 1K5
Q22 2N2369A
Q25 2N2369A
1
3
R83 27K
P5 5K0
2
Q21 BC556
0.20V
Q24 BC556
R91 27K
3
P6 5K0
1
2
C39 1N
R90 4E7
C41 100N
C40 1N
Bias: 0.3V
Ve1
Ve2
Bias: 0.3V
R109 15K
R85 750E 1%
R93 750E 1%
R111 15K
R84 1K00 1%
R86 3E30 1%
R94 3E30 1%
R92 1K00 1%
Vmf1
Vmf2
Ve1
Ve2
R107 470E
R106 470E
1 2 3
J7A

Open: Regulating
0V: 23V

Vin: ca. -27mV/mA

Ve: ca. 20mV/mA

FOR 'Ve' MEASUREMENT
Bias: 9mV +/- 1mV

Property of: UNIPHY B.V. THE NETHERLANDS
Drawn by: N.H. Beun
Approval:
Location: PCB 792*

Title
790 V/I CONVERTER

Size	Document Number	REV
A	Schema 7900VIC.SCH	D

Date: December 15, 1997 Sheet 13 of 38

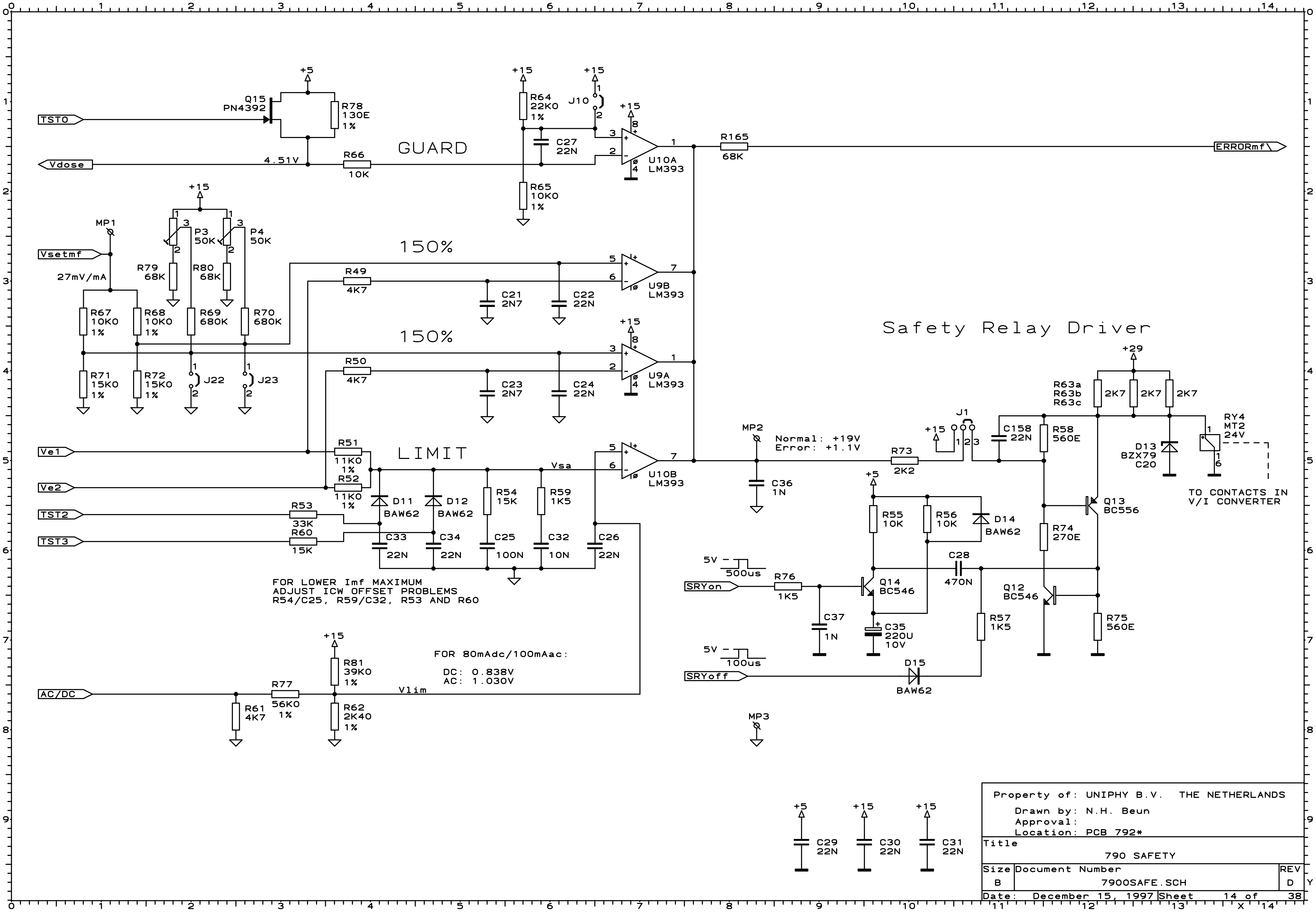
GUARD
150%
150%
LIMIT
Safety Relay Driver
TSTO
Vdose
Vsetmf
Ve1
Ve2
TST2
TST3
AC/DC
ERRORmf\
SRYon
SRYoff
Q15 PN4392
R78 130E 1%
+5
4.51V
R66 10K
+15
R64 22K0 1%
C27 22N
R65 10K0 1%
J10
U10A LM393
R165 68K
MP1
27mV/mA
P3 50K
P4 50K
R79 68K
R80 68K
R67 10K0 1%
R68 10K0 1%
R69 680K
R70 680K
R71 15K0 1%
R72 15K0 1%
J22
J23
R49 4K7
C21 2N7
C22 22N
U9B LM393
R50 4K7
C23 2N7
C24 22N
U9A LM393
R51 11K0 1%
R52 11K0 1%
R53 33K
R60 15K
D11 BAW62
D12 BAW62
R54 15K
R59 1K5
Vsa
C33 22N
C34 22N
C25 100N
C32 10N
C26 22N
U10B LM393
R81 39K0 1%
R77 56K0 1%
R61 4K7
R62 2K40 1%
Vlim
MP2
Normal: +19V
Error: +1.1V
C36 1N
R73 2K2
J1
C158 22N
R58 560E
+29
R63a R63b R63c
2K7
2K7
2K7
RY4 MT2 24V
D13 BZX79 C20
TO CONTACTS IN V/I CONVERTER
Q13 BC556
R74 270E
R55 10K
R56 10K
D14 BAW62
5V
500us
R76 1K5
Q14 BC546
C28 470N
Q12 BC546
C37 1N
C35 220U 10V
R57 1K5
R75 560E
100us
D15 BAW62
MP3
C29 22N
C30 22N
C31 22N

FOR LOWER Imf MAXIMUM
ADJUST ICW OFFSET PROBLEMS
R54/C25, R59/C32, R53 AND R60

FOR 80mAdc/100mAac:
DC: 0.838V
AC: 1.030V

Property of: UNIPHY B.V. THE NETHERLANDS
Drawn by: N.H. Beun
Approval:
Location: PCB 792*

Title		
790 SAFETY		
Size	Document Number	REV
B	7900SAFE.SCH	D
Date: December 15, 1997	Sheet 14 of 38	

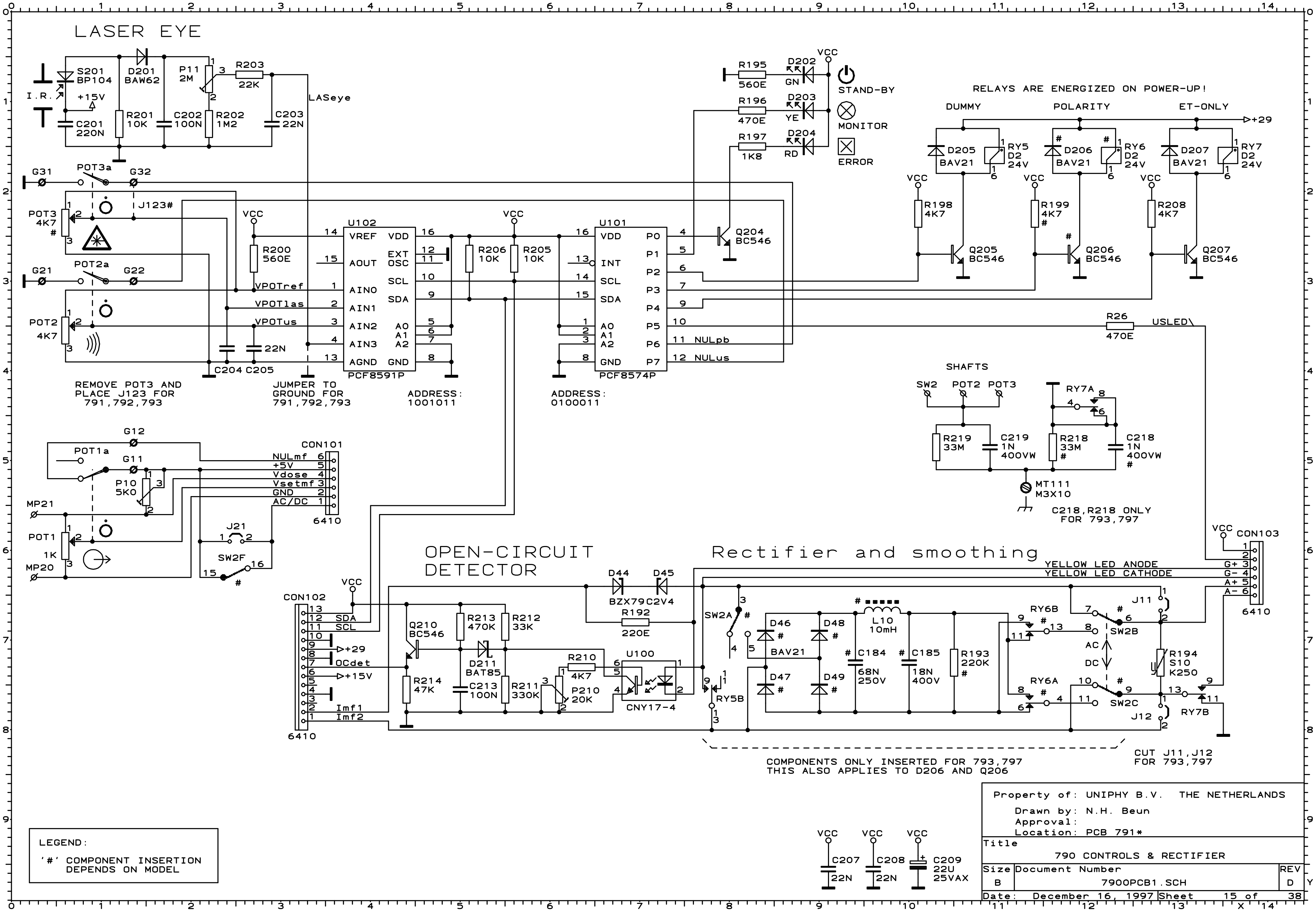
LASER EYE
I.R.
S201
BP104
D201
BAW62
P11
2M
R203
22K
LASeye
+15V
C201
220N
R201
10K
C202
100N
R202
1M2
C203
22N
G31
POT3a
G32
POT3
4K7
J123#
G21
POT2a
G22
POT2
4K7
VCC
R200
560E
VPOTref
VPOT1as
VPOTus
C204 C205
22N
U102
VREF
VDD
AOUT
EXT OSC
AIN0
AIN1
AIN2
AIN3
AGND
SCL
SDA
A0
A1
A2
GND
PCF8591P
REMOVE POT3 AND PLACE J123 FOR 791,792,793
JUMPER TO GROUND FOR 791,792,793
ADDRESS: 1001011
R206
10K
R205
10K
U101
VDD
INT
SCL
SDA
A0
A1
A2
GND
P0
P1
P2
P3
P4
P5
P6
P7
NULpb
NULus
PCF8574P
ADDRESS: 0100011
R195
560E
D202
GN
R196
470E
D203
YE
R197
1K8
D204
RD
STAND-BY
MONITOR
ERROR
Q204
BC546
RELAYS ARE ENERGIZED ON POWER-UP!
DUMMY
POLARITY
ET-ONLY
+29
D205
BAV21
RY5
D2
24V
D206
BAV21
RY6
D2
24V
D207
BAV21
RY7
D2
24V
R198
4K7
Q205
BC546
R199
4K7
Q206
BC546
R208
4K7
Q207
BC546
R26
470E
USLED\
SHAFTS
SW2
POT2
POT3
RY7A
R219
33M
C219
1N
400VW
R218
33M
C218
1N
400VW
MT111
M3X10
C218,R218 ONLY FOR 793,797
G12
POT1a
G11
P10
5K0
CON101
NULmf
+5V
Vdose
Vsetmf
GND
AC/DC
6410
MP21
POT1
1K
MP20
J21
SW2F
OPEN-CIRCUIT DETECTOR
CON102
SDA
SCL
+29
OCdet
+15V
Imf1
Imf2
6410
Q210
BC546
R213
470K
R212
33K
D211
BAT85
R214
47K
C213
100N
R211
330K
R210
4K7
P210
20K
U100
CNY17-4
Rectifier and smoothing
D44
BZX79C2V4
D45
R192
220E
SW2A
RY5B
D46
D47
D48
D49
BAV21
L10
10mH
C184
68N
250V
C185
18N
400V
R193
220K
RY6B
RY6A
AC
DC
SW2B
SW2C
J11
J12
R194
S10
K250
RY7B
VCC
CON103
YELLOW LED ANODE
YELLOW LED CATHODE
G+
G-
A+
A-
6410
COMPONENTS ONLY INSERTED FOR 793,797
THIS ALSO APPLIES TO D206 AND Q206
CUT J11,J12 FOR 793,797
C207
22N
C208
22N
C209
22U
25VAX

LEGEND:

'#' COMPONENT INSERTION DEPENDS ON MODEL

Property of: UNIPHY B.V. THE NETHERLANDS

Drawn by: N.H. Beun
Approval:
Location: PCB 791*

Title		
790 CONTROLS & RECTIFIER		
Size	Document Number	REV
B	7900PCB1.SCH	D
Date: December 16, 1997	Sheet 15 of 38	

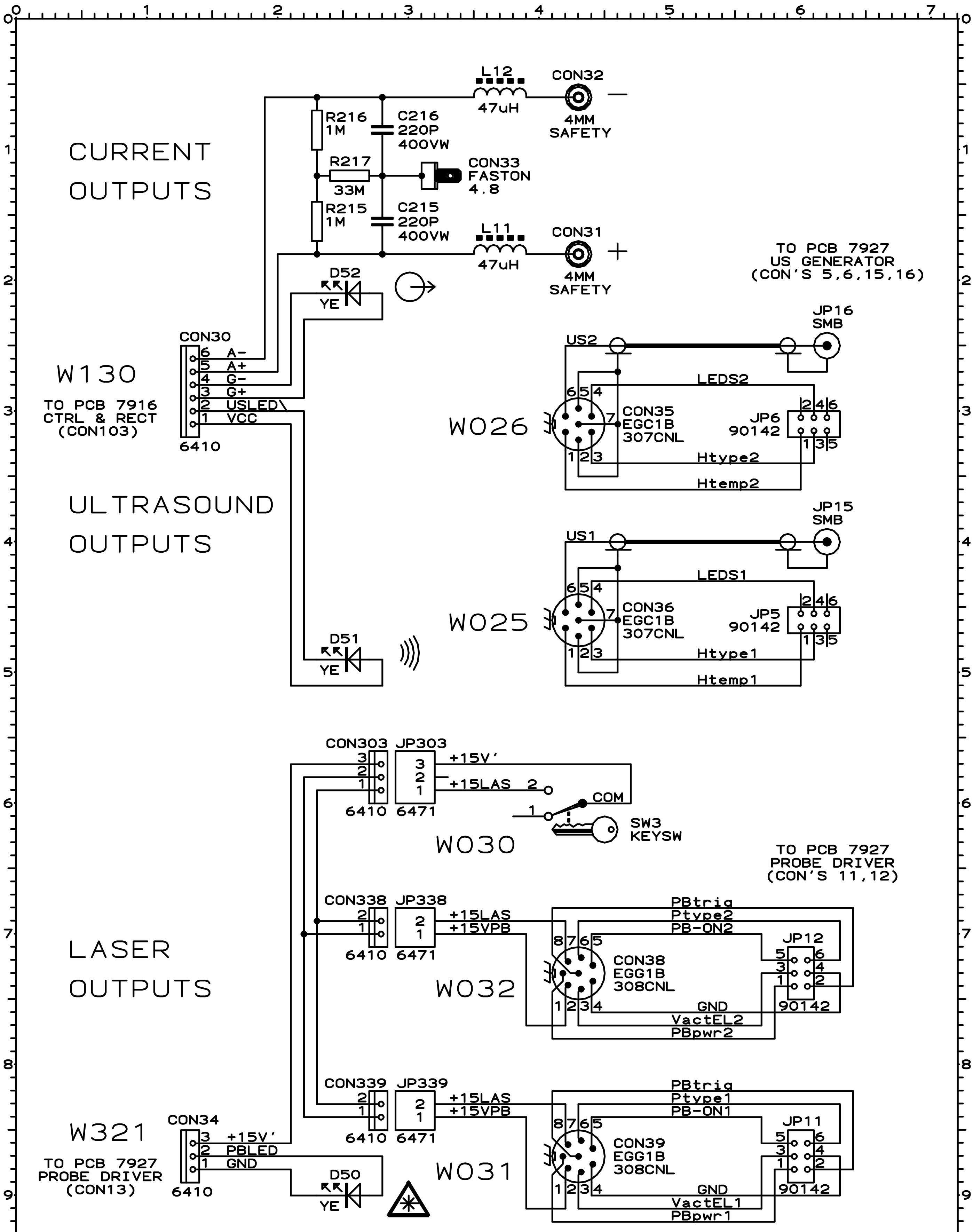
CURRENT OUTPUTS
ULTRASOUND OUTPUTS
LASER OUTPUTS
L12
47uH
CON32
4MM SAFETY
R216 1M
C216 220P 400VW
R217 33M
CON33 FASTON 4.8
R215 1M
C215 220P 400VW
L11
47uH
CON31
4MM SAFETY
D52 YE
D51 YE
D50 YE
CON30
6 A-
5 A+
4 G-
3 G+
2 USLED\
1 VCC
6410
W130
TO PCB 7916 CTRL & RECT (CON103)
TO PCB 7927 US GENERATOR (CON'S 5,6,15,16)
JP16 SMB
US2
LEDS2
CON35 EGC1B 307CNL
JP6 90142
Htype2
Htemp2
W026
JP15 SMB
US1
LEDS1
CON36 EGC1B 307CNL
JP5 90142
Htype1
Htemp1
W025
CON303 JP303
+15V'
+15LAS
COM
6410 6471
SW3 KEYSW
W030
TO PCB 7927 PROBE DRIVER (CON'S 11,12)
CON338 JP338
+15LAS
+15VPB
6410 6471
PBtrig
Ptype2
PB-ON2
CON38 EGG1B 308CNL
JP12
90142
GND
VactEL2
PBpwr2
W032
CON339 JP339
+15LAS
+15VPB
6410 6471
PBtrig
Ptype1
PB-ON1
CON39 EGG1B 308CNL
JP11
90142
GND
VactEL1
PBpwr1
W031
CON34
3 +15V'
2 PBLED
1 GND
6410
W321
TO PCB 7927 PROBE DRIVER (CON13)

Property of: UNIPHY B.V. THE NETHERLANDS

Drawn by: N.H. Beun
Approval:
Location: PCB 793*

Title
790 OUTPUTS

Size	Document Number	REV
D	7900OUT.SCH	D

Date: December 15, 1997 Sheet 16 of 38

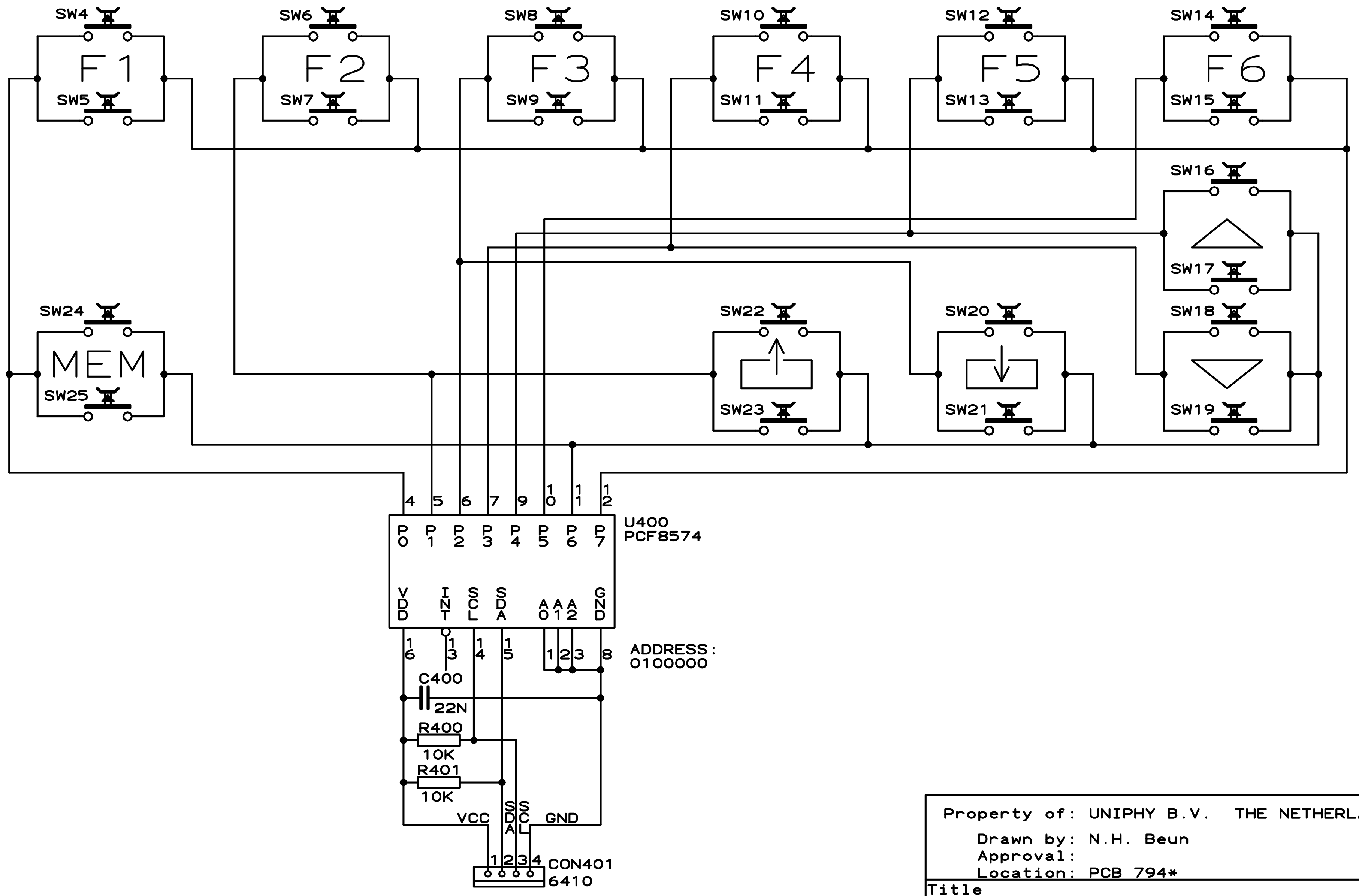
SW4
SW5
F1
SW6
SW7
F2
SW8
SW9
F3
SW10
SW11
F4
SW12
SW13
F5
SW14
SW15
F6
SW16
SW17
SW18
SW19
SW20
SW21
SW22
SW23
SW24
SW25
MEM
4
5
6
7
9
10
11
12
U400
PCF8574
P0
P1
P2
P3
P4
P5
P6
P7
VDD
INT
SCL
SDA
A0
A1
A2
GND
16
13
14
15
1
2
3
8
ADDRESS:
0100000
C400
22N
R400
10K
R401
10K
VCC
SDA
SCL
GND
1
2
3
4
CON401
6410

Property of: UNIPHY B.V. THE NETHERLANDS

Drawn by: N.H. Beun
Approval:
Location: PCB 794*

Title
790 CONSOLE

Size	Document Number	REV
A	Schema 7900KEY.SCH	D

Date: December 16, 1997 Sheet 17 of 38

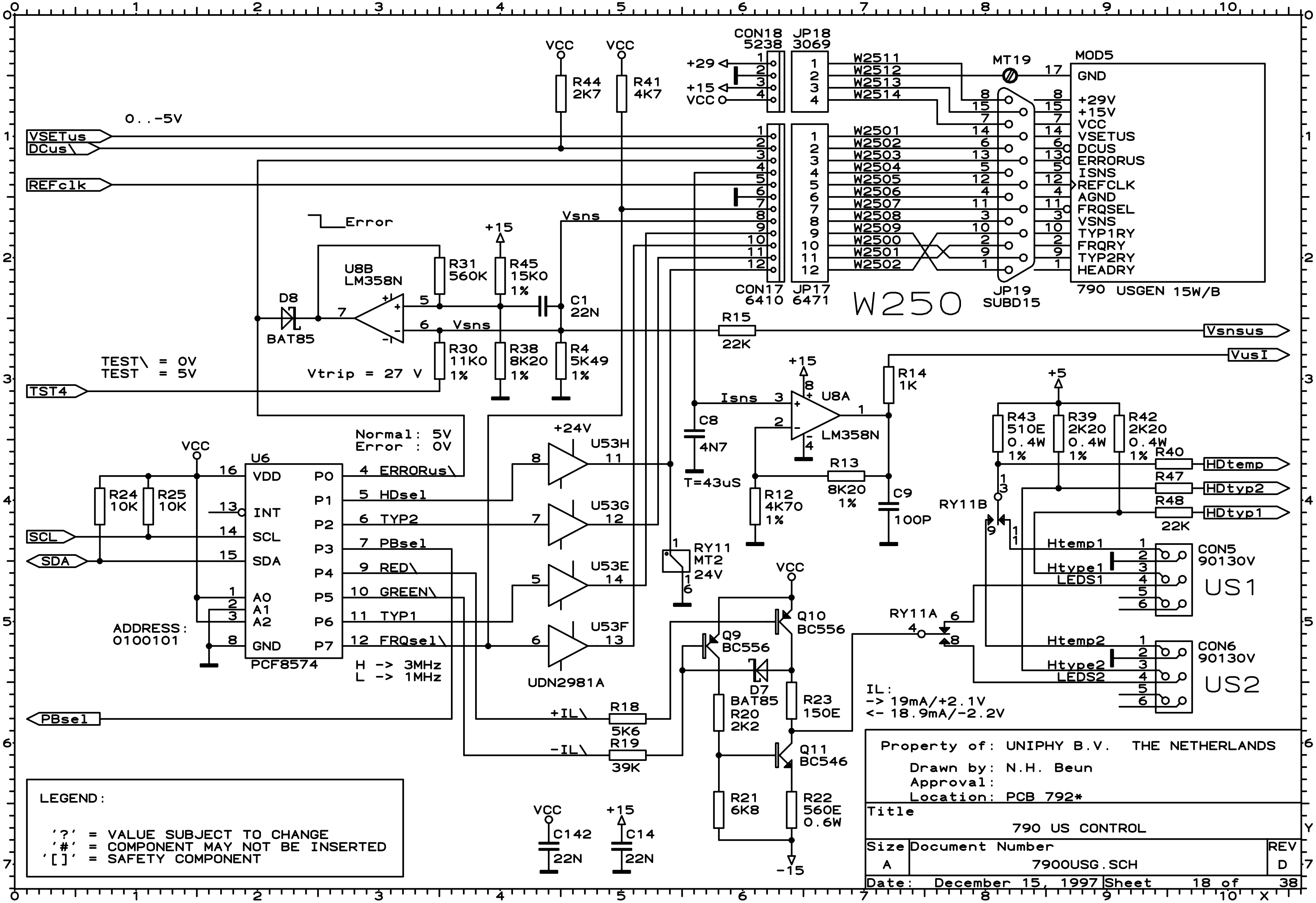
VSETus
DCus\
REFclk
TST4
SCL
SDA
PBsel
0..-5V
TEST\ = 0V
TEST = 5V
Vtrip = 27 V
Error
Vsns
VCC
R44 2K7
R41 4K7
+15
R31 560K
R45 15K0 1%
C1 22N
D8 BAT85
U8B LM358N
R30 11K0 1%
R38 8K20 1%
R4 5K49 1%
R15 22K
Vsnsus
VusI
CON18 5238
JP18 3069
+29
+15
W2511
W2512
W2513
W2514
W2501
W2502
W2503
W2504
W2505
W2506
W2507
W2508
W2509
W2500
CON17 6410
JP17 6471
W250
MT19
JP19 SUBD15
MOD5
GND
+29V
+15V
VCC
VSETUS
DCUS
ERRORUS
ISNS
REFCLK
AGND
FRQSEL
VSNS
TYP1RY
FRQRY
TYP2RY
HEADRY
790 USGEN 15W/B
Normal: 5V
Error : 0V
U6
PCF8574
VDD
INT
SCL
SDA
A0
A1
A2
GND
P0
P1
P2
P3
P4
P5
P6
P7
ERRORus\
HDsel
TYP2
PBsel
RED\
GREEN\
TYP1
FRQsel\
H -> 3MHz
L -> 1MHz
R24 10K
R25 10K
ADDRESS:
0100101
+24V
U53H
U53G
U53E
U53F
UDN2981A
Isns
C8 4N7
T=43uS
U8A LM358N
R14 1K
R12 4K70 1%
R13 8K20 1%
C9 100P
RY11 MT2 24V
+5
R43 510E 0.4W 1%
R39 2K20 0.4W 1%
R42 2K20 0.4W 1%
R40
R47
R48 22K
HDtemp
HDtyp2
HDtyp1
RY11B
RY11A
Htemp1
Htype1
LEDS1
CON5 90130V
US1
Htemp2
Htype2
LEDS2
CON6 90130V
US2
Q9 BC556
Q10 BC556
Q11 BC546
D7 BAT85
R18 5K6
R19 39K
+IL\
-IL\
R20 2K2
R21 6K8
R22 560E 0.6W
R23 150E
-15
IL:
-> 19mA/+2.1V
<- 18.9mA/-2.2V
C142 22N
C14 22N

LEGEND:

'?' = VALUE SUBJECT TO CHANGE
'#' = COMPONENT MAY NOT BE INSERTED
'[]' = SAFETY COMPONENT

Property of: UNIPHY B.V. THE NETHERLANDS
Drawn by: N.H. Beun
Approval:
Location: PCB 792*

Title		
	790 US CONTROL	
Size	Document Number	REV
A	7900USG.SCH	D
Date:	December 15, 1997	Sheet 18 of 38

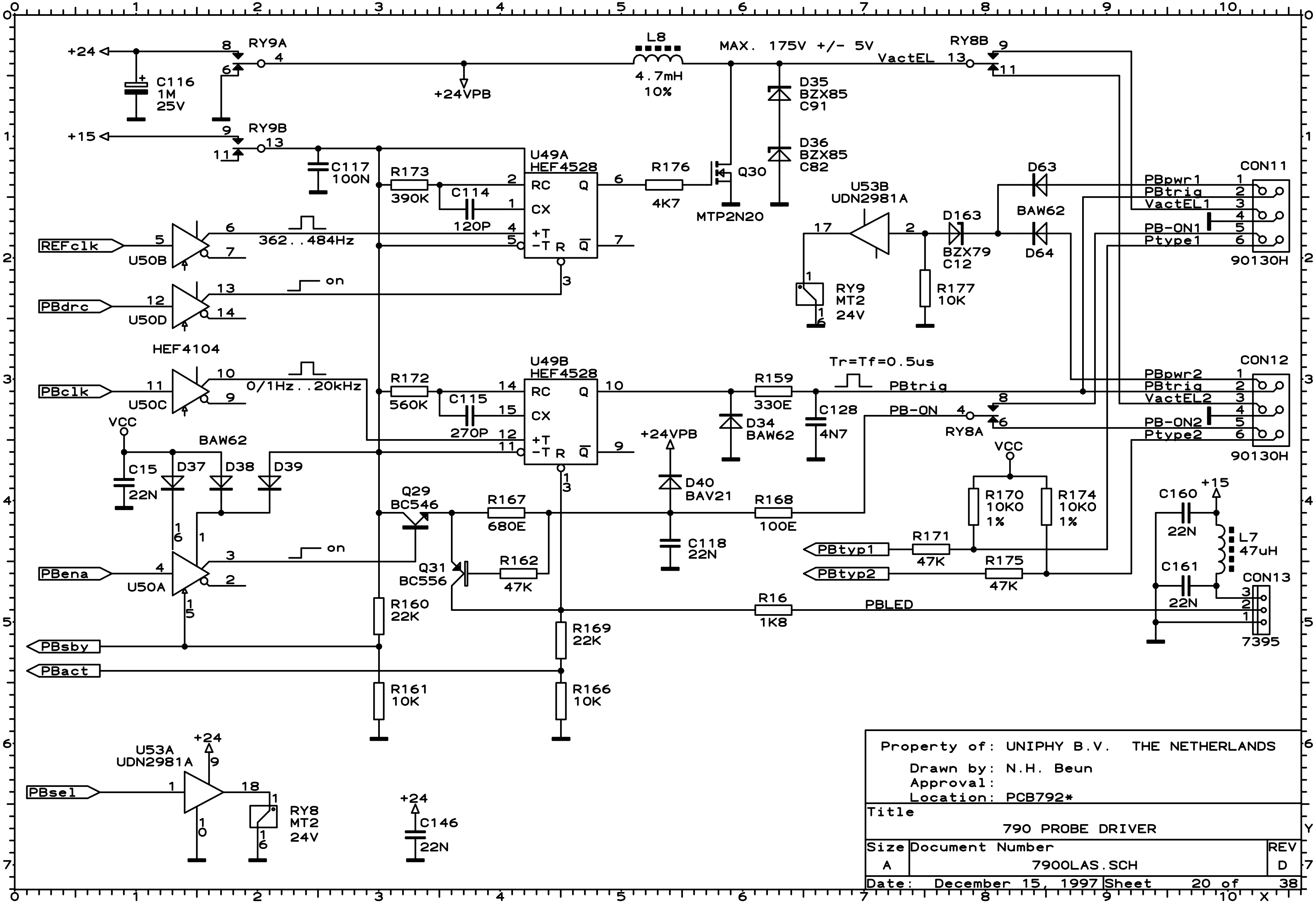
+24
C116
1M
25V
RY9A
8
6
4
+24VPB
L8
4.7mH
10%
MAX. 175V +/- 5V
D35
BZX85
C91
D36
BZX85
C82
VactEL
RY8B
9
13
11
+15
RY9B
9
11
13
C117
100N
R173
390K
C114
120P
U49A
HEF4528
RC
CX
+T
-T
R
Q
Q̄
R176
4K7
Q30
MTP2N20
U53B
UDN2981A
17
2
D63
D163
BZX79
C12
BAW62
D64
R177
10K
RY9
MT2
24V
CON11
PBpwr1
PBtrig
VactEL1
PB-ON1
Ptype1
90130H
REFclk
U50B
362..484Hz
PBdrc
U50D
on
HEF4104
PBclk
U50C
0/1Hz..20kHz
R172
560K
C115
270P
U49B
HEF4528
R159
330E
Tr=Tf=0.5us
PBtrig
PB-ON
RY8A
D34
BAW62
C128
4N7
CON12
PBpwr2
PBtrig
VactEL2
PB-ON2
Ptype2
90130H
VCC
BAW62
C15
22N
D37
D38
D39
+24VPB
D40
BAV21
Q29
BC546
R167
680E
R168
100E
R170
10K0
1%
R174
10K0
1%
C160
22N
+15
L7
47uH
PBena
U50A
on
Q31
BC556
R162
47K
C118
22N
PBtyp1
R171
47K
PBtyp2
R175
47K
C161
22N
CON13
7395
R160
22K
R16
1K8
PBLED
R169
22K
PBsby
PBact
R161
10K
R166
10K
U53A
UDN2981A
+24
PBsel
RY8
MT2
24V
+24
C146
22N

Property of: UNIPHY B.V. THE NETHERLANDS

Drawn by: N.H. Beun
Approval:
Location: PCB792*

Title
790 PROBE DRIVER

Size	Document Number	REV
A	7900LAS.SCH	D

Date: December 15, 1997 Sheet 20 of 38

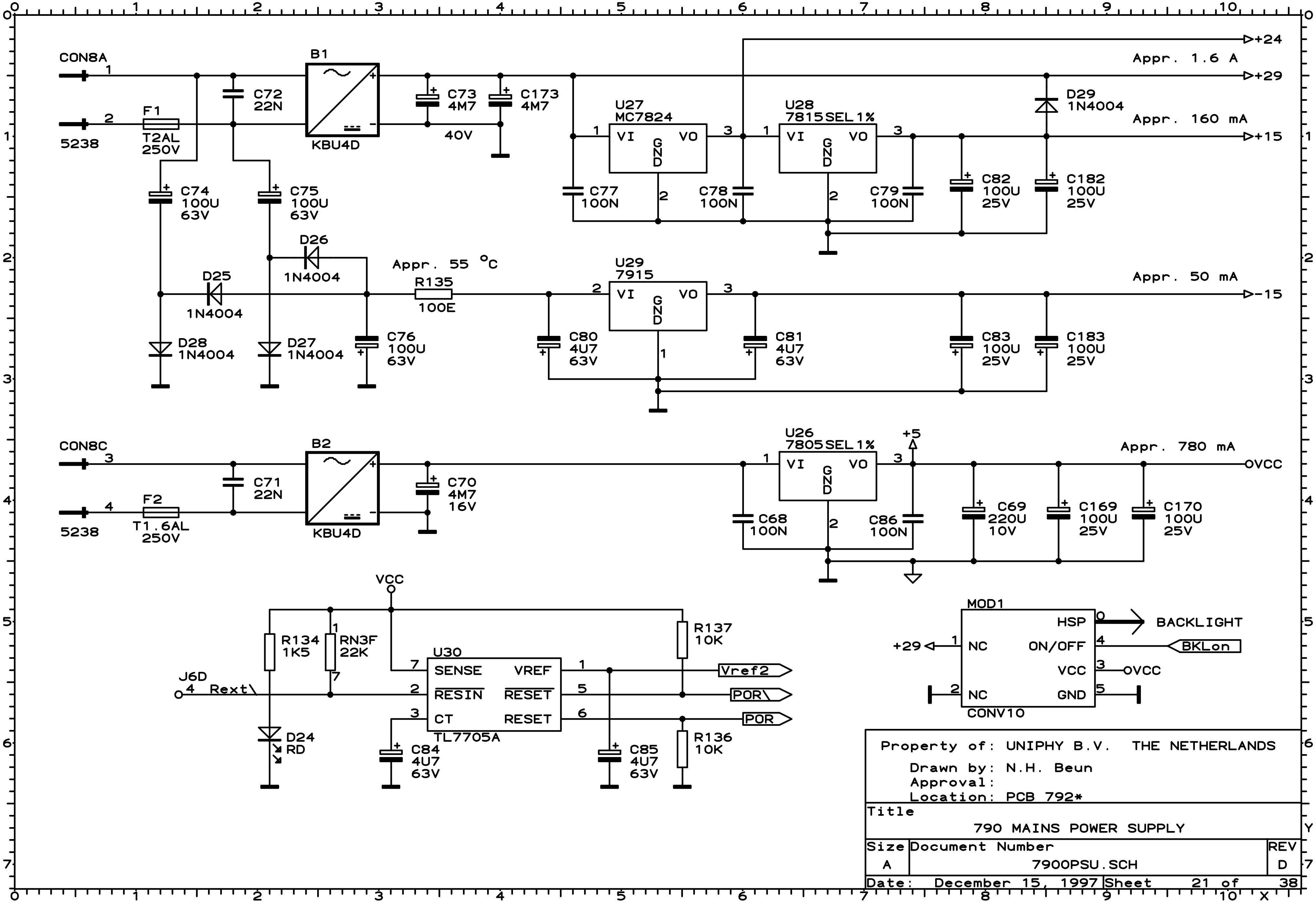
CON8A
1
2
5238
F1
T2AL
250V
C72
22N
B1
KBU4D
C73
4M7
C173
4M7
40V
C74
100U
63V
C75
100U
63V
D26
1N4004
D25
1N4004
D28
1N4004
D27
1N4004
C76
100U
63V
Appr. 55 °C
R135
100E
U27
MC7824
VI
GND
VO
C77
100N
U28
7815SEL1%
C78
100N
C79
100N
C82
100U
25V
C182
100U
25V
D29
1N4004
+24
Appr. 1.6 A
+29
Appr. 160 mA
+15
U29
7915
C80
4U7
63V
C81
4U7
63V
C83
100U
25V
C183
100U
25V
Appr. 50 mA
-15
CON8C
3
4
5238
F2
T1.6AL
250V
C71
22N
B2
KBU4D
C70
4M7
16V
U26
7805SEL1%
+5
C68
100N
C86
100N
C69
220U
10V
C169
100U
25V
C170
100U
25V
Appr. 780 mA
OVCC
VCC
R134
1K5
RN3F
22K
J6D
4 Rext\
D24
RD
U30
TL7705A
SENSE
RESIN
CT
VREF
RESET
RESET
C84
4U7
63V
C85
4U7
63V
R137
10K
R136
10K
Vref2
POR\
POR
MOD1
CONV10
HSP
ON/OFF
VCC
GND
NC
NC
+29
BACKLIGHT
BKLon
OVCC

Property of: UNIPHY B.V. THE NETHERLANDS
Drawn by: N.H. Beun
Approval:
Location: PCB 792*

Title		
790 MAINS POWER SUPPLY		
Size	Document Number	REV
A	7900PSU.SCH	D
Date: December 15, 1997	Sheet 21 of 38	

CONV10 COMPONENTSIDE

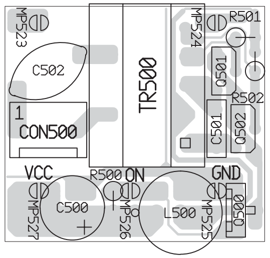
MP523
C502
TR500
MP524
R501
Q501
R502
1
CON500
C501
Q502
VCC
R500
ON
GND
MP527
C500
MP526
L500
MP525
Q500

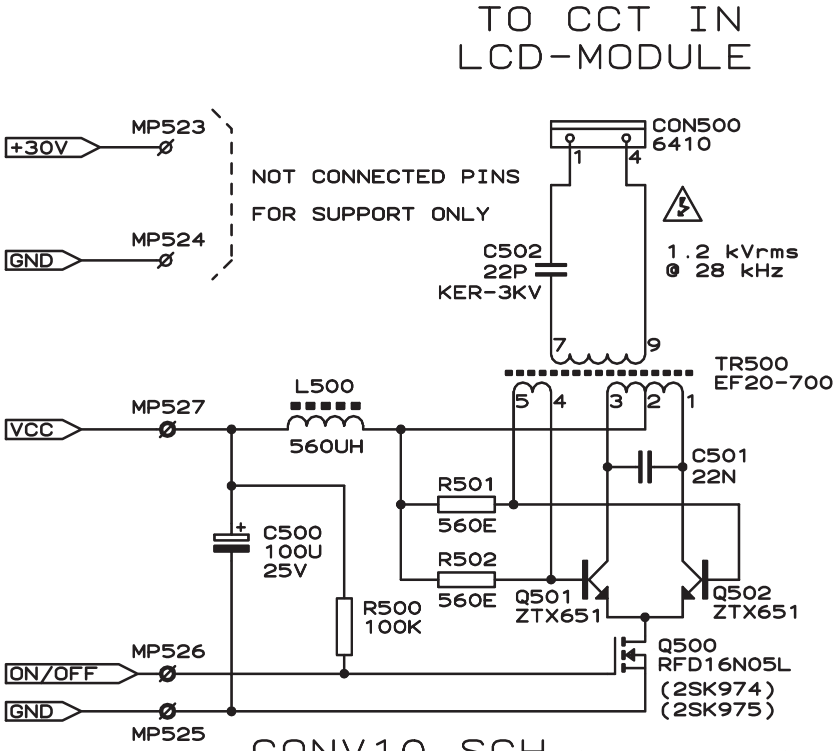
TO CCT IN
LCD-MODULE
+30V
MP523
GND
MP524
NOT CONNECTED PINS
FOR SUPPORT ONLY
CON500
6410
1
4
C502
22P
KER-3KV
1.2 kVrms
@ 28 kHz
7
9
TR500
EF20-700
5
4
3
2
1
L500
560UH
VCC
MP527
C501
22N
R501
560E
R502
560E
C500
100U
25V
R500
100K
Q501
ZTX651
Q502
ZTX651
Q500
RFD16N05L
(2SK974)
(2SK975)
ON/OFF
MP526
GND
MP525

CONV10.SCH (JUNE 21, 1993)

Property of: UNIPHY B.V. THE NETHERLANDS
Drawn by: N.H. Beun
Approval:
Location: PCB CONV1*

Title		
CONV10 BACKLIGHT CONVERTER		
Size	Document Number	REV
A	7900CONV.SCH	D
Date: December 15, 1997	Sheet 22 of 38	

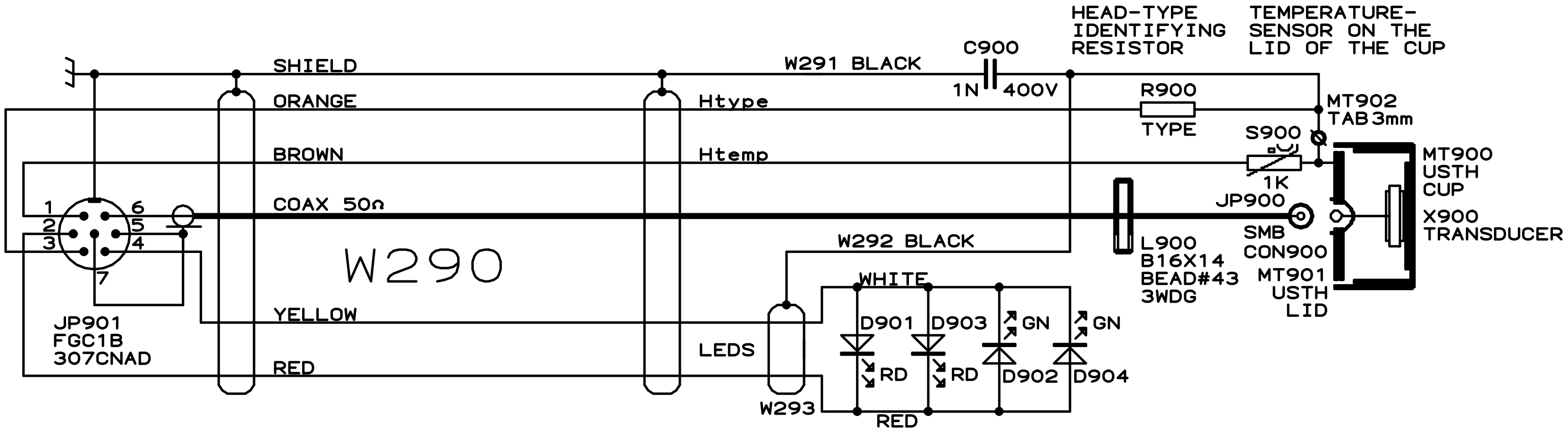
HEAD-TYPE
IDENTIFYING
RESISTOR
TEMPERATURE-
SENSOR ON THE
LID OF THE CUP
C900
SHIELD
W291 BLACK
1N
400V
R900
ORANGE
Htype
TYPE
MT902
TAB3mm
S900
BROWN
Htemp
1K
MT900
USTH
CUP
JP900
COAX 50Ω
1
2
3
6
5
4
7
SMB
CON900
X900
TRANSDUCER
W290
W292 BLACK
L900
B16X14
BEAD#43
3WDG
MT901
USTH
LID
WHITE
JP901
FGC1B
307CNAD
YELLOW
D901
D903
GN
GN
LEDS
RD
RD
D902
D904
RED
W293
RED

TYPE	R900	X900	ERA
291	680E	D13	1cm²
292	2K2	D25	4cm²
293	6K8	D38	10cm²

NOTICE: TYPE 293 IS OUT OF PRODUCTION

Property of: UNIPHY B.V. THE NETHERLANDS
Drawn by: N.H. Beun
Approval:
Location: US TREATMENT HEAD 29*

Title	290 US TREATMENT HEAD		
Size	Document Number		REV
A	7900USPB.SCH		D
Date:	December 15, 1997	Sheet 24 of 38	

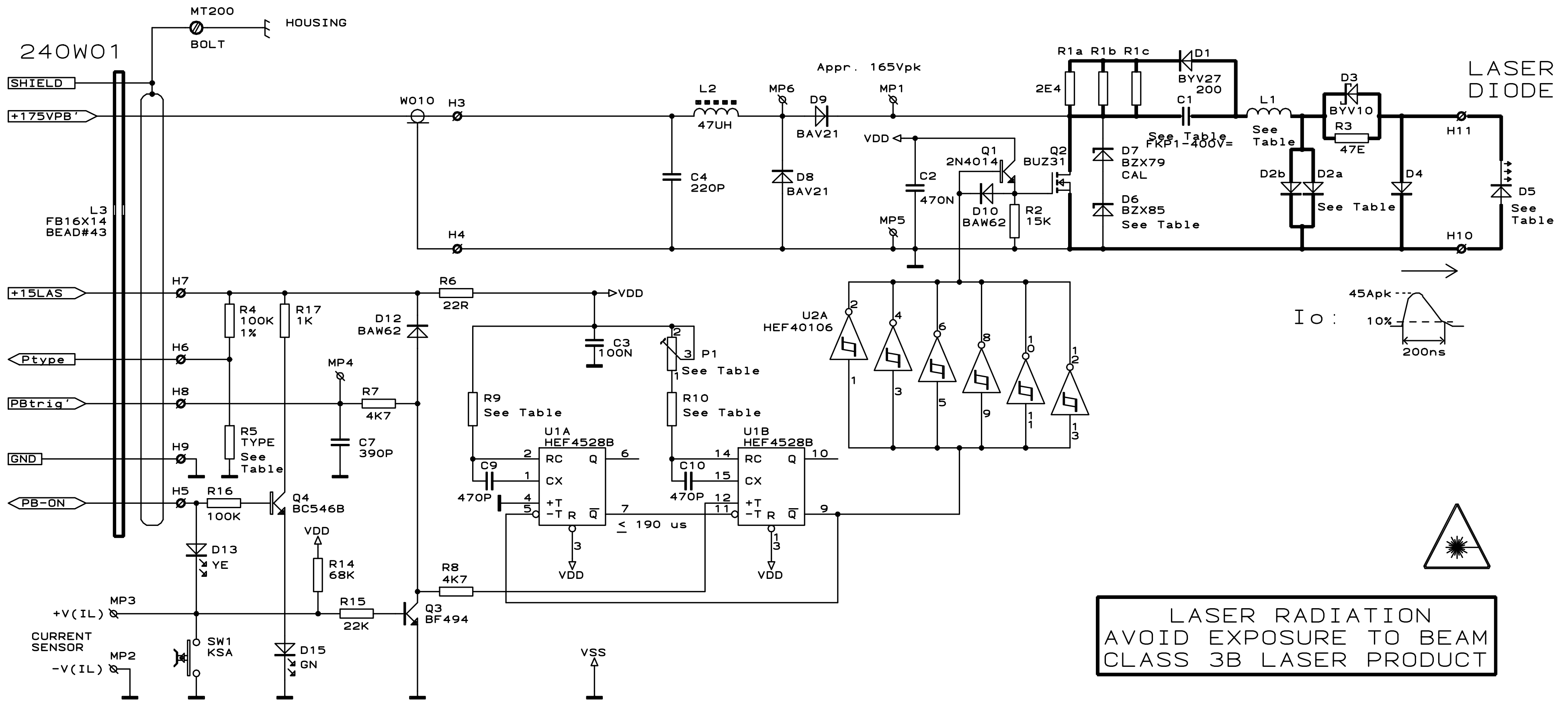
240W01
MT200
BOLT
HOUSING
SHIELD
+175VPB'
+15LAS
Ptype
PBtrig'
GND
PB-ON
L3
FB16X14
BEAD#43
W010
H3
H4
H7
H6
H8
H9
H5
L2
47UH
C4
220P
MP6
D8
BAV21
D9
BAV21
Appr. 165Vpk
MP1
VDD
C2
470N
MP5
Q1
2N4014
Q2
BUZ31
D10
BAW62
R2
15K
R1a R1b R1c
2E4
D1
BYV27
200
C1
See Table
FKP1-400V=
D7
BZX79
CAL
D6
BZX85
See Table
L1
See Table
D3
BYV10
R3
47E
D2b
D2a
See Table
D4
D5
See Table
H11
H10
LASER
DIODE
45Apk
Io :
10%
200ns
R6
22R
D12
BAW62
R4
100K
1%
R17
1K
R5
TYPE
See Table
MP4
R7
4K7
C7
390P
C3
100N
P1
See Table
R9
See Table
R10
See Table
U1A
HEF4528B
U1B
HEF4528B
RC
CX
+T
-T
R
Q
C9
470P
C10
470P
< 190 us
U2A
HEF40106
R16
100K
Q4
BC546B
D13
YE
VDD
R14
68K
MP3
+V(IL)
CURRENT
SENSOR
MP2
-V(IL)
SW1
KSA
D15
GN
R15
22K
Q3
BF494
R8
4K7
VSS

LASER RADIATION
AVOID EXPOSURE TO BEAM
CLASS 3B LASER PRODUCT

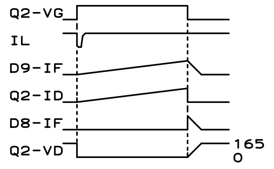
Q2-VG
IL
D9-IF
Q2-ID
D8-IF
Q2-VD
165
0

TYPE	R5	R9	R10	P1	C1	L1	D2a,D2b,D4	D5	D6
241	1K0	680K	220K	250K	22n	@ME241010	BAW62	LD65R	150V
242	1K8	680K	82K	250K	22n	@ME241010	BAW62	CVD68R	91V
243	6K8	68K	4K7	50K	22n	L245021	BAW62	CVD68R	43V
245	3K3	680K	150K	250K	33n	L245021	BAV21	4x LD79	150V
	15K								

Property of: UNIPHY B.V. THE NETHERLANDS
Drawn by: N.H. Beun
Approval:
Location: PCB 240*

Title		
240 LASER-PROBE		
Size	Document Number	REV
B	7900LSPB.SCH	D
Date: December 15, 1997	Sheet 25 of 38	

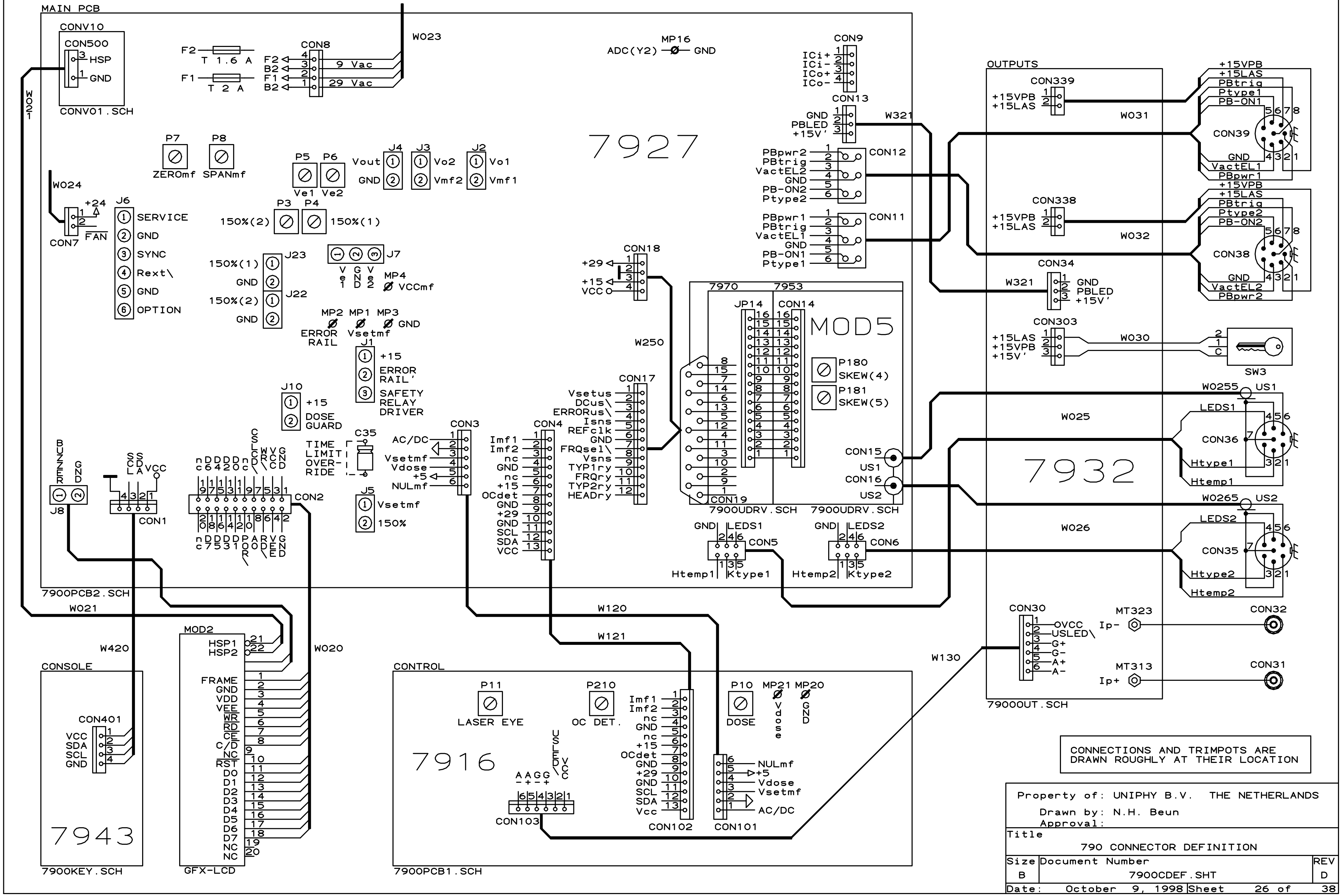
MAIN PCB
CONV10
CON500
3 HSP
1 GND
CONV01.SCH
W021
F2 T 1.6 A
F1 T 2 A
CON8
F2 4
B2 3
F1 2
B2 1
9 Vac
29 Vac
W023
MP16
ADC(Y2) GND
CON9
ICi+ 1
ICi- 2
ICo+ 3
ICo- 4
CON13
GND 1
PBLED 2
+15V' 3
W321
7927
P7 ZEROmf
P8 SPANmf
P5 P6
Ve1 Ve2
J4 Vout GND
J3 Vo2 Vmf2
J2 Vo1 Vmf1
W024
+24
CON7
FAN
J6
1 SERVICE
2 GND
3 SYNC
4 Rext\
5 GND
6 OPTION
P3 P4
150%(2) 150%(1)
J7
Ve1 GND Vs2
MP4 VCCmf
J23 150%(1) GND
J22 150%(2) GND
MP2 MP1 MP3
ERROR RAIL Vsetmf GND
J1 +15 ERROR RAIL' SAFETY RELAY DRIVER
J10 +15 DOSE GUARD
C35
TIME LIMIT OVER-RIDE
J5 Vsetmf 150%
CON12
PBpwr2 1
PBtrig 2
VactEL2 3
GND 4
PB-ON2 5
Ptype2 6
CON11
PBpwr1 1
PBtrig 2
VactEL1 3
GND 4
PB-ON1 5
Ptype1 6
CON18
+29 1
+15 2, 3
VCC 4
W250
7970 7953
JP14 CON14
MOD5
P180 SKEW(4)
P181 SKEW(5)
CON17
Vsetus 1
DCus\ 2
ERRORus\ 3
Isns 4
REFclk 5
GND 6
FRQsel\ 7
Vsns 8
TYP1ry 9
FRQry 10
TYP2ry 11
HEADry 12
CON19
7900UDRV.SCH 7900UDRV.SCH
CON15 US1
CON16 US2
CON3
AC/DC 1
2
3
Vsetmf 4
Vdose 5
+5 5
NULmf 6
CON4
Imf1 1
Imf2 2
nc 3
GND 4
nc 5
+15 6
OCdet 7
GND 8
+29 9
GND 10
SCL 11
SDA 12
VCC 13
BUZZER GND
J8
SS CD LA VCC
CON1
nc6 D4 D2 D0 nc SCL CD VR WC GN
CON2
nc7 D5 D3 D1 PAR OD VE GN
GND LEDS1 CON5 Htemp1 Ktype1
GND LEDS2 CON6 Htemp2 Ktype2
7900PCB2.SCH
W021 W120 W121 W420 W020
MOD2
HSP1 21
HSP2 22
FRAME 1
GND 2
VDD 3
VEE 4
WR 5
RD 6
CE 7
C/D 8
NC 9
RST 10
D0 11
D1 12
D2 13
D3 14
D4 15
D5 16
D6 17
D7 18
NC 19
NC 20
GFX-LCD
CONSOLE
CON401
VCC 1
SDA 2
SCL 3
GND 4
7943
7900KEY.SCH
CONTROL
P11 LASER EYE
P210 OC DET.
P10 DOSE
MP21 Vdose
MP20 GND
7916
USLED VCC
AAGG -+-+
CON103 6 5 4 3 2 1
CON102
Imf1 1
Imf2 2
nc 3
GND 4
nc 5
+15 6
OCdet 7
GND 8
+29 9
GND 10
SCL 11
SDA 12
Vcc 13
CON101
NULmf 6
+5 5
Vdose 4
Vsetmf 3
2
AC/DC 1
7900PCB1.SCH
OUTPUTS
CON339 +15VPB 1 +15LAS 2
W031
+15VPB +15LAS PBtrig Ptype1 PB-ON1
CON39 5 6 7 8 4 3 2 1
GND VactEL1 PBpwr1
CON338 +15VPB 1 +15LAS 2
W032
+15VPB +15LAS PBtrig Ptype2 PB-ON2
CON38 5 6 7 8 4 3 2 1
GND VactEL2 PBpwr2
CON34 W321 1 GND 2 PBLED 3 +15V'
CON303 +15LAS 1 +15VPB 2 +15V' 3
W030
2 1 C SW3
W0255 US1
W025
LEDS1 CON36 Htype1 Htemp1
7932
W0265 US2
W026
LEDS2 CON35 Htype2 Htemp2
CON30
1 OVCC
2 USLED\
3 G+
4 G-
5 A+
6 A-
MT323 Ip-
CON32
MT313 Ip+
CON31
W130
79000UT.SCH

CONNECTIONS AND TRIMPOTS ARE
DRAWN ROUGHLY AT THEIR LOCATION

Property of: UNIPHY B.V. THE NETHERLANDS
Drawn by: N.H. Beun
Approval:

Title	790 CONNECTOR DEFINITION	
Size B	Document Number 7900CDEF.SHT	REV D
Date: October 9, 1998	Sheet 26 of	38

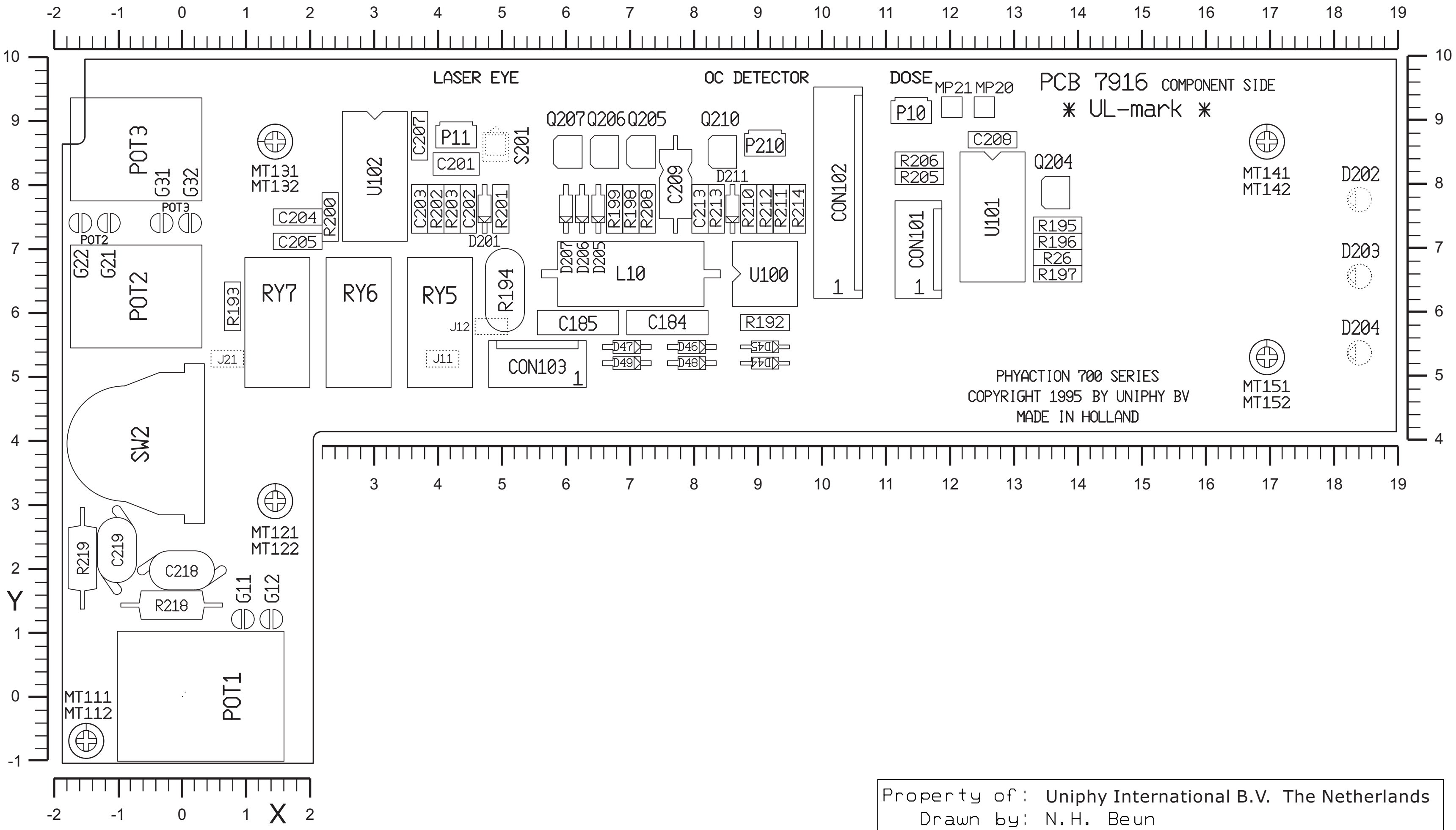
LASER EYE
OC DETECTOR
DOSE
PCB 7916 COMPONENT SIDE
✻ UL-mark ✻
MP21 MP20
P10
POT3
G31 G32
POT3
POT2
G22 G21
POT2
MT131 MT132
U102
C207
P11
C201
S201
C204
C205
R200
C203 R202 R203 C202 R201
D201
Q207 Q206 Q205
Q210
P210
C209
D211
R199 R198 R208
C213 R213 R210 R212 R211 R214
CON102
R206 R205
C208
Q204
U101
CON101
R195 R196 R26 R197
MT141 MT142
D202
D203
D204
R193
RY7
RY6
RY5
R194
J12
J21
J11
D207 D206 D205
L10
U100
C185
C184
R192
CON103
D47 D49 D46 D48 D45 D44
PHYACTION 700 SERIES
COPYRIGHT 1995 BY UNIPHY BV
MADE IN HOLLAND
MT151 MT152
SW2
MT121 MT122
R219
C219
C218
R218
G11 G12
POT1
MT111 MT112
Y
X
-2 -1 0 1 2 3 4 5 6 7 8 9 10 11 12 13 14 15 16 17 18 19
10 9 8 7 6 5 4 3 2 1 0 -1

Property of: Uniphy International B.V. The Netherlands
Drawn by: N.H. Beun
Approval:

Title
Component Layout PCB 7916

Size A4
Document Number 7916.ps
REV D

Date: August 23, 1995
Sheet 29-1 of 38

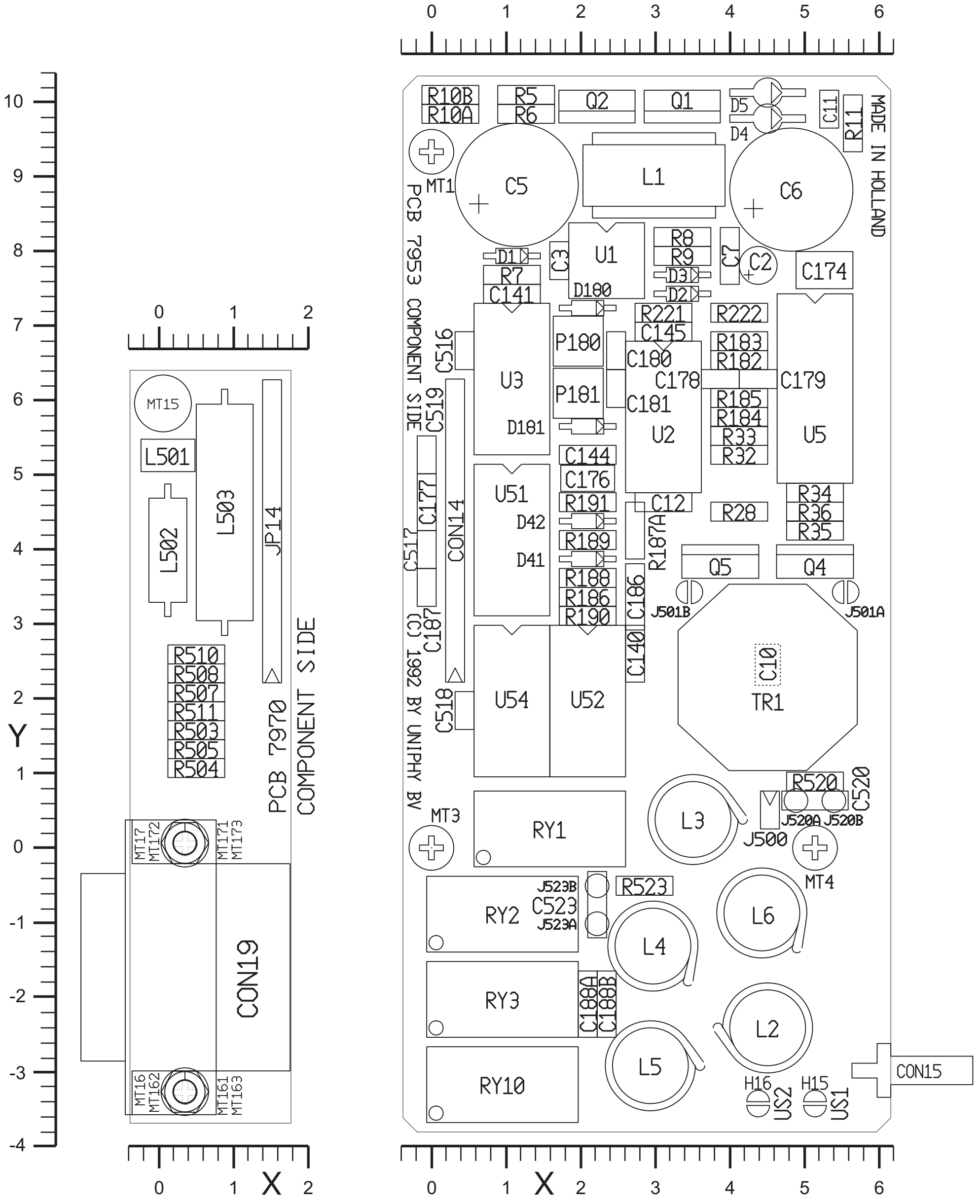
R10B
R10A
R5
R6
Q2
Q1
D5
D4
C11
R11
MADE IN HOLLAND
MT1
C5
L1
C6
PCB 7953 COMPONENT SIDE
D1
C3
U1
R8
R9
C7
C2
C174
R7
C141
D180
D3
D2
R221
R222
C145
P180
R183
R182
C516
U3
C180
C178
C179
P181
R185
R184
C181
R33
U2
U5
D181
C519
R32
C144
C176
U51
R34
R191
C12
R36
R28
D42
R35
C177
CON14
R189
R187A
C517
D41
Q5
Q4
R188
C186
R186
J501B
J501A
R190
C187
(C) 1992 BY UNIPHY BV
C140
C10
C518
U54
U52
TR1
R520
C520
MT3
RY1
L3
J520A
J520B
J500
MT4
J523B
R523
RY2
C523
J523A
L6
L4
RY3
C188A
C188B
L2
L5
RY10
CON15
H16
H15
US2
US1
MT15
L501
L503
L502
JP14
PCB 7970 COMPONENT SIDE
R510
R508
R507
R511
R503
R505
R504
MT17
MT172
MT171
MT173
CON19
MT16
MT162
MT161
MT163
Y
X
0
1
2
3
4
5
6
7
8
9
10
-1
-2
-3
-4

Property of:	Uniphy International B.V. The Netherlands
Drawn by:	N.H. Beun
Approval:	

Title
Component Layout PCB 7953 & 7970

Size	Document Number	REV
A4	7953.ps	D

Date:	July 19, 1994	Sheet	33-1 of	38

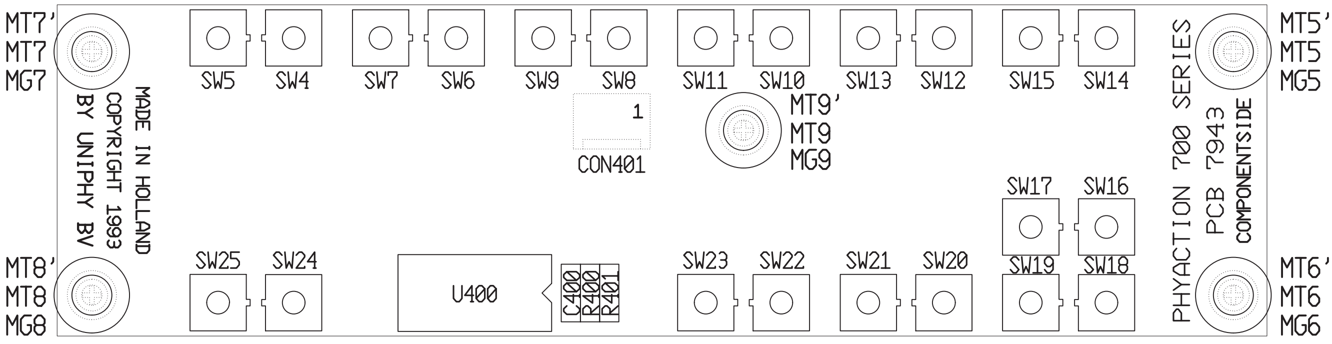
MT7'
MT7
MG7
MT8'
MT8
MG8
MADE IN HOLLAND
COPYRIGHT 1993
BY UNIPHY BV
SW5
SW4
SW7
SW6
SW9
SW8
SW11
SW10
SW13
SW12
SW15
SW14
1
CON401
MT9'
MT9
MG9
SW17
SW16
SW25
SW24
U400
C400
R400
R401
SW23
SW22
SW21
SW20
SW19
SW18
PHYACTION 700 SERIES
PCB 7943
COMPONENTSIDE
MT5'
MT5
MG5
MT6'
MT6
MG6

Property of: Uniphy International B.V. The Netherlands
Drawn by: N.H. Beun
Approval:

Title
Component Layout PCB 7943

Size	Document Number	REV
A4	7943.ps	D

Date: December 23, 1992 Sheet 32-1 of 38

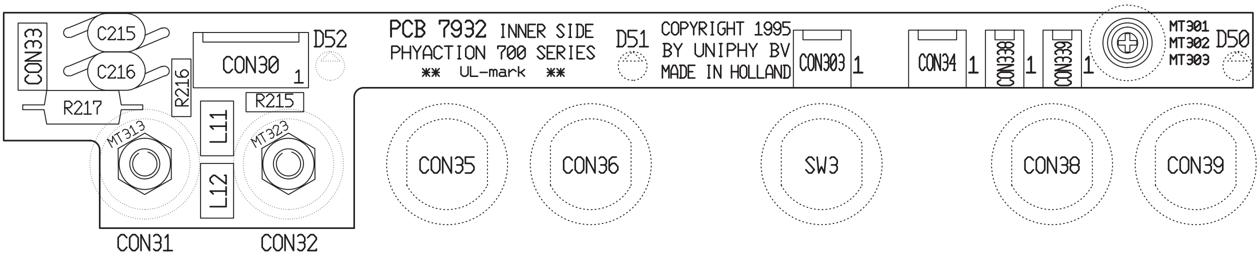
PCB 7932 INNER SIDE
PHYACTION 700 SERIES
** UL-mark **
COPYRIGHT 1995
BY UNIPHY BV
MADE IN HOLLAND
CON33
C215
C216
R217
R216
CON30
1
D52
R215
L11
L12
MT313
MT323
CON31
CON32
D51
CON35
CON36
SW3
CON303
1
CON34
1
CON338
1
CON339
1
MT301
MT302
MT303
D50
CON38
CON39

Property of: Uniphy International B.V. The Netherlands Drawn by: N.H. Beun Approval:			
Title Component Layout PCB 7932			
Size A4	Document Number 7932.ps		REV D
Date: August 24, 1995	Sheet 31-1 of 38		

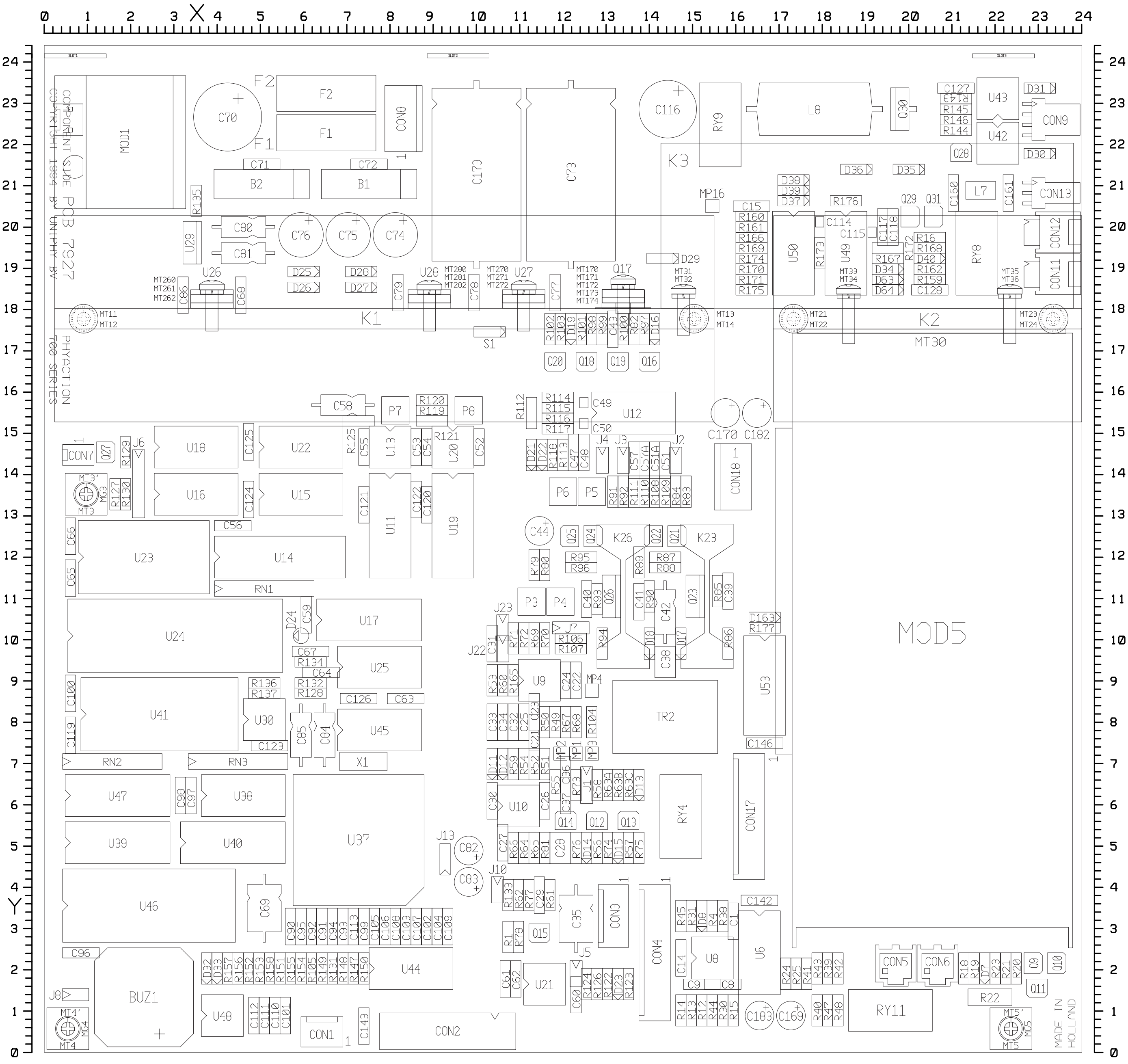
COMPONENT SIDE PCB 7927
COPYRIGHT 1994 BY UNIPHY BV
PHYACTION 700 SERIES
MOD1
MOD5
C70
F1
F2
B1
B2
CON8
C173
C73
C116
RY9
L8
Q30
U43
U42
CON9
CON13
CON12
CON11
K1
K2
K3
MT30
U50
U49
RY8
U18
U22
U16
U15
U23
U14
RN1
U24
U17
U25
U41
U30
U45
X1
RN2
RN3
U47
U38
U39
U40
U37
U46
C69
BUZ1
U48
CON1
CON2
U44
U13
U20
U11
U19
U12
P7
P8
P6
P5
P3
P4
K26
K23
CON18
C170
C182
U53
TR2
U9
U10
RY4
CON17
CON3
CON4
C35
U21
U8
U6
C142
CON5
CON6
RY11
R22
C183
C169
J13
J10
J22
J23
J5
J8
J6
S1
Q17
U26
U28
U27
U29
C80
C81
C76
C75
C74
MADE IN HOLLAND
X
Y
0 1 2 3 4 5 6 7 8 9 10 11 12 13 14 15 16 17 18 19 20 21 22 23 24

Property of: Uniphy International B.V. The Netherlands
Drawn by: N.H. Beun
Approval:

Title
Component Layout PCB 7927

Size A4
Document Number 7927.ps
REV D

Date: September 20, 1994
Sheet 30-1 of 38

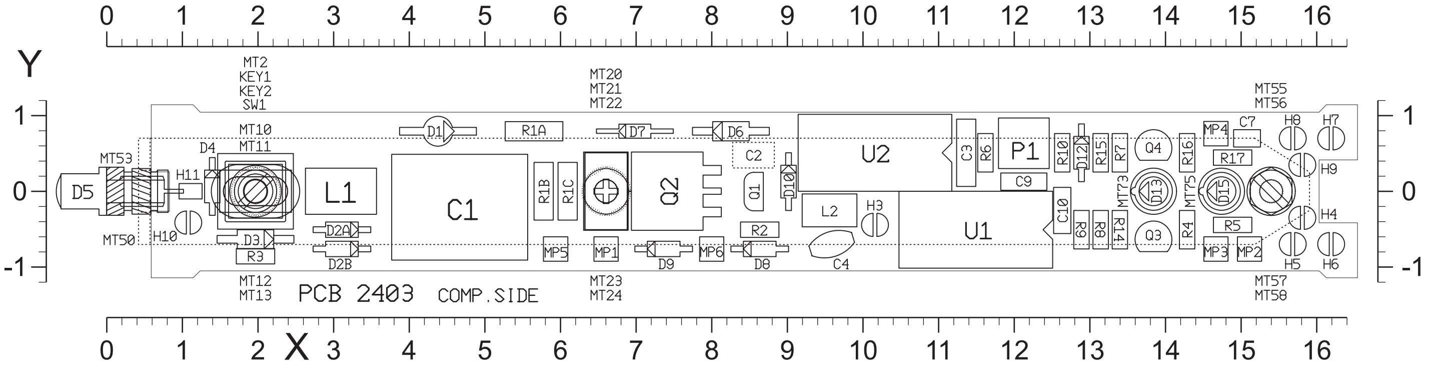
0 1 2 3 4 5 6 7 8 9 10 11 12 13 14 15 16
Y
1
0
-1
X
MT2
KEY1
KEY2
SW1
MT10
MT11
MT53
D4
H11
D5
MT50
H10
D3
R3
MT12
MT13
L1
D2A
D2B
PCB 2403
COMP.SIDE
D1
C1
R1A
R1B
R1C
MP5
MT20
MT21
MT22
MP1
MT23
MT24
Q2
D7
D9
MP6
D6
C2
Q1
D10
R2
D8
U2
L2
H3
C4
U1
C3
R6
P1
C9
C10
R10
D12
R15
R7
R9
R8
R14
Q4
MT73
D13
Q3
R16
MT75
R4
MP4
R17
D15
R5
MP3
MP2
C7
MT55
MT56
H8
H7
H9
H4
H5
H6
MT57
MT58

Property of :	Uniphy International B.V. The Netherlands
Drawn by :	N.H. Beun
Approval :	

Title

Component Layout PCB 2403

Size	Document Number	REV
A4	2403.ps	D

Date : November 11, 1992 Sheet 31 of 33

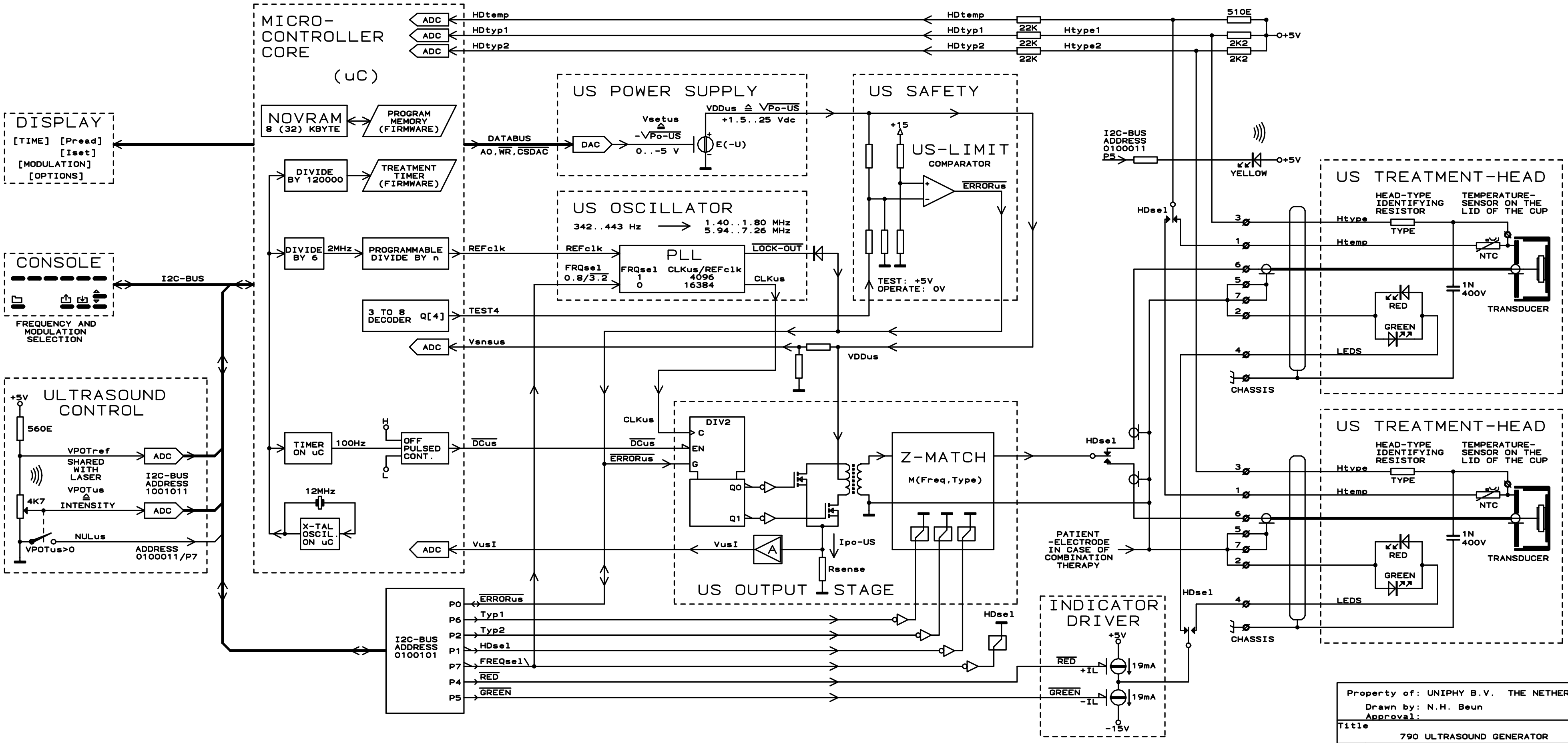
MICRO-CONTROLLER CORE
(uC)
ADC
ADC
ADC
HDtemp
HDtyp1
HDtyp2
HDtemp
HDtyp1
HDtyp2
22K
22K
22K
Htype1
Htype2
510E
2K2
2K2
+5V
NOVRAM
8 (32) KBYTE
PROGRAM MEMORY (FIRMWARE)
DIVIDE BY 120000
TREATMENT TIMER (FIRMWARE)
DIVIDE BY 6
2MHz
PROGRAMMABLE DIVIDE BY n
3 TO 8 DECODER
Q[4]
TIMER ON uC
100Hz
H
L
OFF PULSED CONT.
12MHz
X-TAL OSCIL. ON uC
DISPLAY
[TIME] [Pread]
[Iset]
[MODULATION]
[OPTIONS]
CONSOLE
FREQUENCY AND MODULATION SELECTION
I2C-BUS
ULTRASOUND CONTROL
+5V
560E
VPOTref
SHARED WITH LASER
ADC
I2C-BUS ADDRESS 1001011
VPOTus ≙ INTENSITY
4K7
ADC
NULus
VPOTus>0
ADDRESS 0100011/P7
DATABUS
A0,WR,CSDAC
US POWER SUPPLY
DAC
Vsetus ≙ -√Po-US
0..-5 V
E(-U)
VDDus ≙ √Po-US
+1.5..25 Vdc
US OSCILLATOR
342..443 Hz ⟶ 1.40..1.80 MHz
5.94..7.26 MHz
REFclk
REFclk
FRQsel
0.8/3.2
PLL
FRQsel CLKus/REFclk
1 4096
0 16384
LOCK-OUT
CLKus
TEST4
ADC
Vsnsus
VDDus
US SAFETY
+15
US-LIMIT
COMPARATOR
ERRORus
TEST: +5V
OPERATE: 0V
CLKus
DCus
DCus
ERRORus
DIV2
C
EN
G
Q0
Q1
Z-MATCH
M(Freq,Type)
ADC
VusI
VusI
A
Ipo-US
Rsense
US OUTPUT STAGE
I2C-BUS ADDRESS 0100101
P0
P6
P2
P1
P7
P4
P5
ERRORus
Typ1
Typ2
HDsel
FREQsel
RED
GREEN
HDsel
INDICATOR DRIVER
+5V
RED
+IL
19mA
GREEN
-IL
19mA
-15V
I2C-BUS ADDRESS 0100011
P5
YELLOW
+5V
HDsel
HDsel
HDsel
PATIENT -ELECTRODE IN CASE OF COMBINATION THERAPY
US TREATMENT-HEAD
HEAD-TYPE IDENTIFYING RESISTOR
TEMPERATURE-SENSOR ON THE LID OF THE CUP
3
Htype
TYPE
1
Htemp
NTC
6
5
7
2
1N
400V
RED
GREEN
TRANSDUCER
4
LEDS
CHASSIS
US TREATMENT-HEAD
HEAD-TYPE IDENTIFYING RESISTOR
TEMPERATURE-SENSOR ON THE LID OF THE CUP
3
Htype
TYPE
1
Htemp
NTC
6
5
7
2
1N
400V
RED
GREEN
TRANSDUCER
4
LEDS
CHASSIS

Property of: UNIPHY B.V. THE NETHERLANDS
Drawn by: N.H. Beun
Approval:

Title		
	790 ULTRASOUND GENERATOR	
Size C	Document Number 7900BLK2.SHT	REV D
Date:	December 15, 1997	Sheet 4 of 38

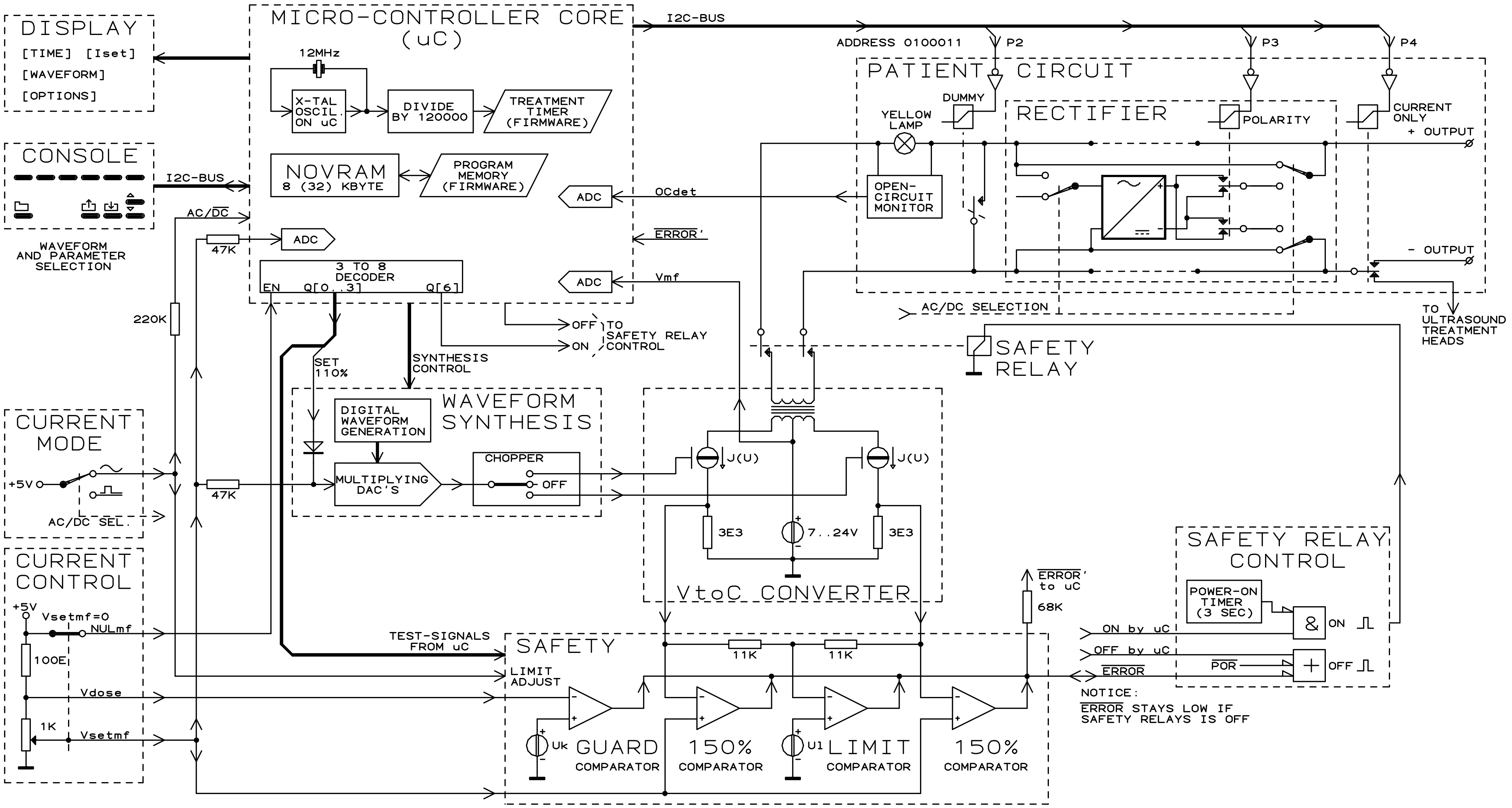
DISPLAY
[TIME] [Iset]
[WAVEFORM]
[OPTIONS]
CONSOLE
I2C-BUS
AC/DC
WAVEFORM AND PARAMETER SELECTION
MICRO-CONTROLLER CORE (uC)
12MHz
X-TAL OSCIL. ON uC
DIVIDE BY 120000
TREATMENT TIMER (FIRMWARE)
NOVRAM 8 (32) KBYTE
PROGRAM MEMORY (FIRMWARE)
ADC
OCdet
ERROR'
Vmf
47K
3 TO 8 DECODER
EN
Q[0..3]
Q[6]
220K
SET 110%
SYNTHESIS CONTROL
OFF
ON
TO SAFETY RELAY CONTROL
I2C-BUS
ADDRESS 0100011
P2
P3
P4
PATIENT CIRCUIT
DUMMY
YELLOW LAMP
OPEN-CIRCUIT MONITOR
RECTIFIER
POLARITY
CURRENT ONLY
+ OUTPUT
- OUTPUT
TO ULTRASOUND TREATMENT HEADS
AC/DC SELECTION
SAFETY RELAY
CURRENT MODE
+5V
AC/DC SEL.
WAVEFORM SYNTHESIS
DIGITAL WAVEFORM GENERATION
MULTIPLYING DAC'S
CHOPPER
OFF
J(U)
J(U)
3E3
7..24V
3E3
VtoC CONVERTER
CURRENT CONTROL
+5V
Vsetmf=0
NULmf
100E
Vdose
1K
Vsetmf
TEST-SIGNALS FROM uC
SAFETY
LIMIT ADJUST
11K
11K
Uk
GUARD COMPARATOR
150% COMPARATOR
U1
LIMIT COMPARATOR
150% COMPARATOR
ERROR' to uC
68K
ON by uC
OFF by uC
ERROR
SAFETY RELAY CONTROL
POWER-ON TIMER (3 SEC)
&
ON
POR
+
OFF
NOTICE:
ERROR STAYS LOW IF SAFETY RELAYS IS OFF

Property of: UNIPHY B.V. THE NETHERLANDS
Drawn by: N.H. Beun
Approval:

Title
790 CURRENT GENERATOR

Size	Document Number	REV
B	7900BLK1.SHT	D

Date: December 15, 1997 Sheet 3 of 38

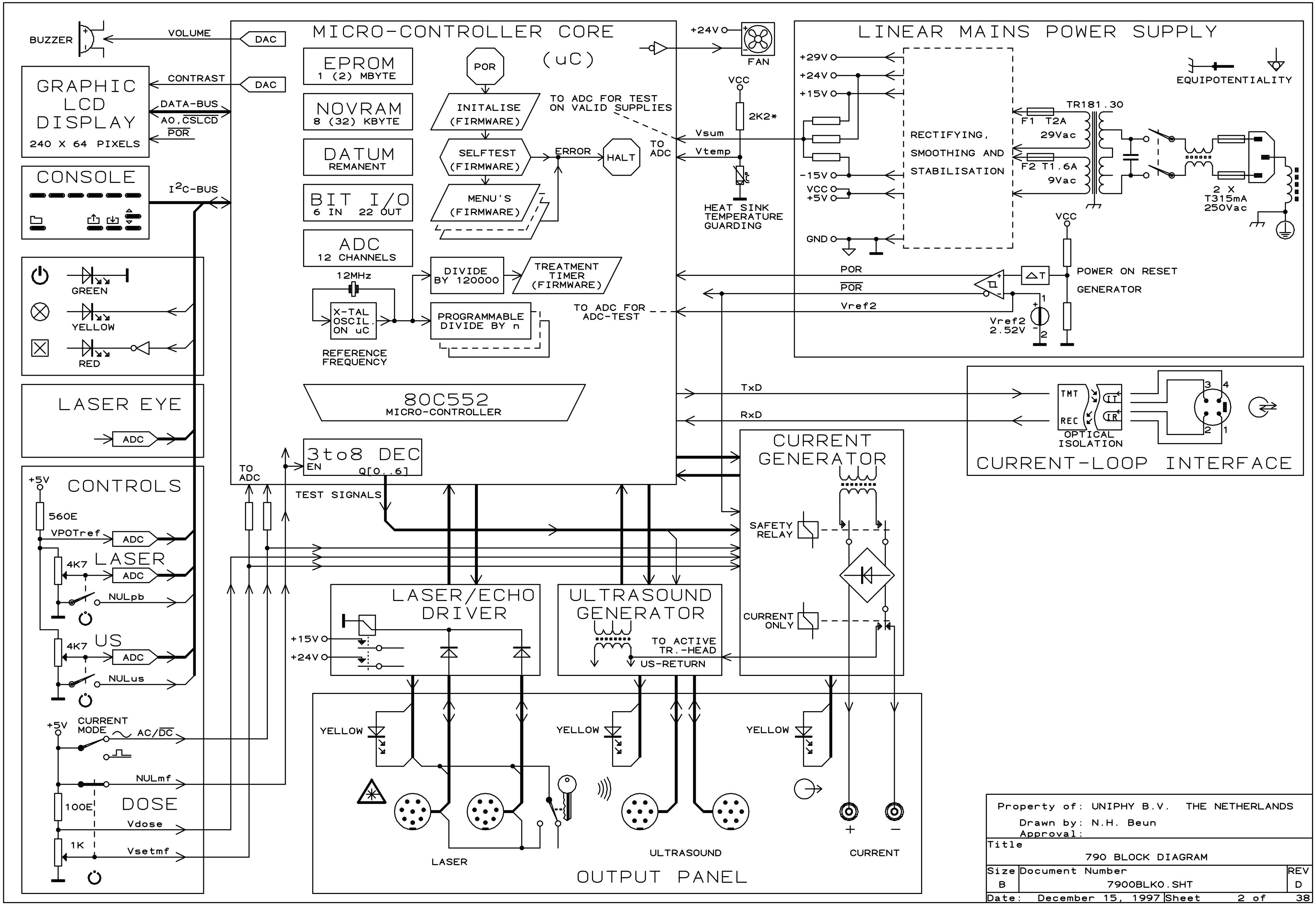
MICRO-CONTROLLER CORE
(uC)
BUZZER
VOLUME
DAC
CONTRAST
DAC
GRAPHIC LCD DISPLAY
240 X 64 PIXELS
DATA-BUS
A0,CSLCD
POR
CONSOLE
I^{2}C-BUS
EPROM
1 (2) MBYTE
NOVRAM
8 (32) KBYTE
DATUM
REMANENT
BIT I/O
6 IN 22 OUT
ADC
12 CHANNELS
POR
INITALISE (FIRMWARE)
SELFTEST (FIRMWARE)
MENU'S (FIRMWARE)
ERROR
HALT
TO ADC FOR TEST ON VALID SUPPLIES
TO ADC
12MHz
X-TAL OSCIL. ON uC
REFERENCE FREQUENCY
DIVIDE BY 120000
TREATMENT TIMER (FIRMWARE)
PROGRAMMABLE DIVIDE BY n
TO ADC FOR ADC-TEST
80C552
MICRO-CONTROLLER
3to8 DEC
EN
Q[0..6]
TO ADC
TEST SIGNALS
+24V
FAN
VCC
2K2*
Vsum
Vtemp
HEAT SINK TEMPERATURE GUARDING
LINEAR MAINS POWER SUPPLY
+29V
+24V
+15V
-15V
VCC
+5V
GND
RECTIFYING, SMOOTHING AND STABILISATION
F1 T2A
29Vac
F2 T1.6A
9Vac
TR181.30
2 X T315mA 250Vac
EQUIPOTENTIALITY
VCC
POWER ON RESET GENERATOR
POR
POR
Vref2
Vref2 2.52V
1
2
TxD
RxD
TMT
REC
OPTICAL ISOLATION
3
4
2
1
CURRENT-LOOP INTERFACE
GREEN
YELLOW
RED
LASER EYE
ADC
CONTROLS
+5V
560E
VPOTref
ADC
LASER
4K7
ADC
NULpb
US
4K7
ADC
NULus
+5V
CURRENT MODE
AC/DC
NULmf
DOSE
100E
Vdose
1K
Vsetmf
CURRENT GENERATOR
SAFETY RELAY
CURRENT ONLY
LASER/ECHO DRIVER
+15V
+24V
ULTRASOUND GENERATOR
TO ACTIVE TR.-HEAD
US-RETURN
YELLOW
YELLOW
YELLOW
LASER
ULTRASOUND
CURRENT
+
−
OUTPUT PANEL

Property of: UNIPHY B.V. THE NETHERLANDS
Drawn by: N.H. Beun
Approval:

Title		
	790 BLOCK DIAGRAM	
Size	Document Number	REV
B	7900BLK0.SHT	D
Date: December 15, 1997	Sheet 2 of	38

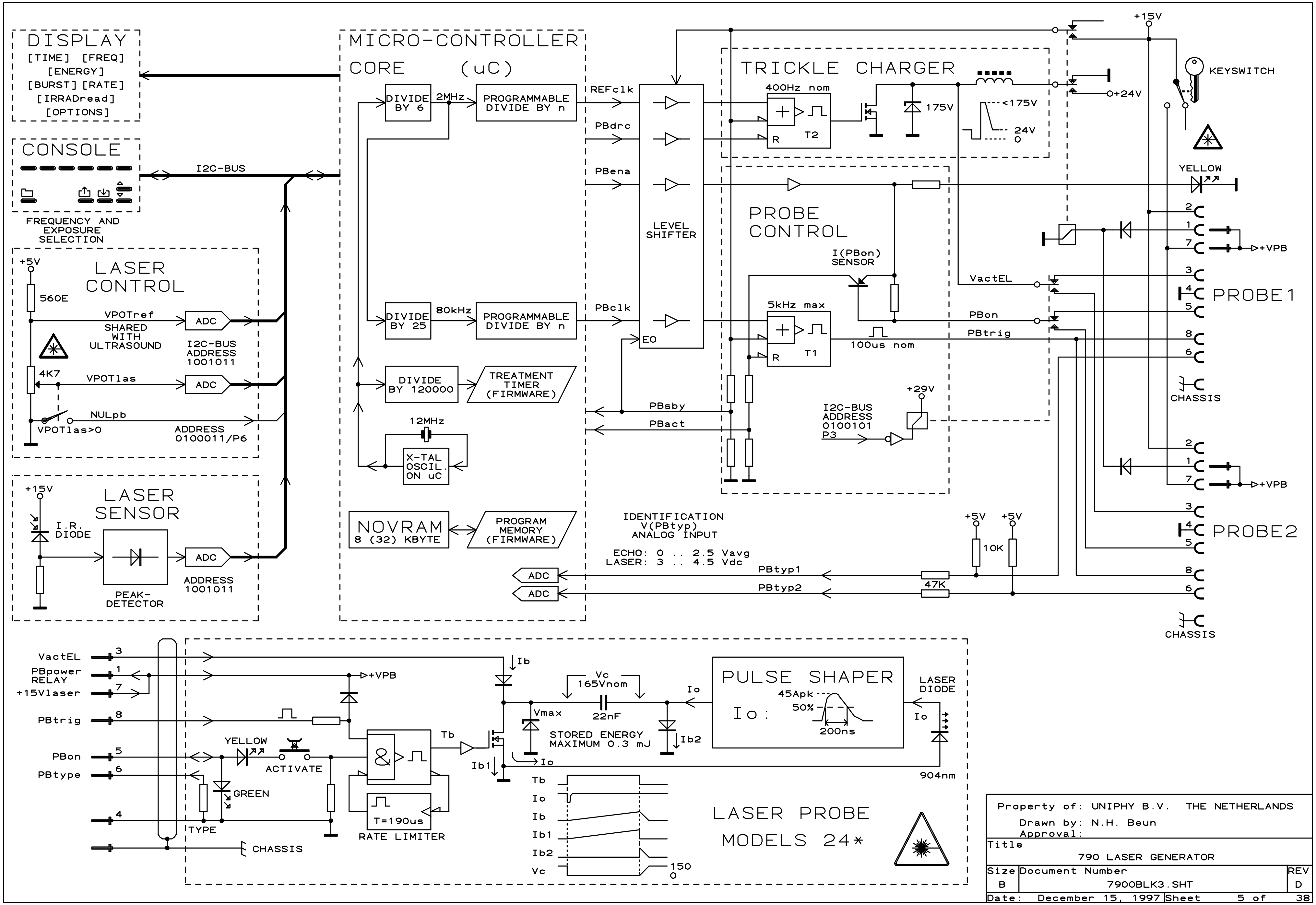
DISPLAY
[TIME] [FREQ]
[ENERGY]
[BURST] [RATE]
[IRRADread]
[OPTIONS]
CONSOLE
I2C-BUS
FREQUENCY AND EXPOSURE SELECTION
LASER CONTROL
+5V
560E
VPOTref
SHARED WITH ULTRASOUND
ADC
I2C-BUS ADDRESS 1001011
4K7
VPOTlas
ADC
NULpb
VPOTlas>0
ADDRESS 0100011/P6
LASER SENSOR
+15V
I.R. DIODE
PEAK-DETECTOR
ADC
ADDRESS 1001011
MICRO-CONTROLLER CORE (uC)
DIVIDE BY 6
2MHz
PROGRAMMABLE DIVIDE BY n
DIVIDE BY 25
80kHz
PROGRAMMABLE DIVIDE BY n
DIVIDE BY 120000
TREATMENT TIMER (FIRMWARE)
12MHz
X-TAL OSCIL. ON uC
NOVRAM 8 (32) KBYTE
PROGRAM MEMORY (FIRMWARE)
REFclk
PBdrc
PBena
PBclk
LEVEL SHIFTER
EO
PBsby
PBact
TRICKLE CHARGER
400Hz nom
R
T2
175V
<175V
24V
0
PROBE CONTROL
I(PBon) SENSOR
5kHz max
R
T1
100us nom
I2C-BUS ADDRESS 0100101 P3
+29V
IDENTIFICATION V(PBtyp) ANALOG INPUT
ECHO: 0 .. 2.5 Vavg
LASER: 3 .. 4.5 Vdc
ADC
ADC
PBtyp1
PBtyp2
47K
47K
+5V
+5V
10K
+15V
KEYSWITCH
+24V
YELLOW
VactEL
PBon
PBtrig
+VPB
+VPB
PROBE1
PROBE2
CHASSIS
CHASSIS
2 1 7 3 4 5 8 6
VactEL
PBpower RELAY
+15Vlaser
PBtrig
PBon
PBtype
3 1 7 8 5 6 4
TYPE
CHASSIS
+VPB
YELLOW
ACTIVATE
GREEN
&
Tb
T=190us
RATE LIMITER
Ib
Vc 165Vnom
22nF
Vmax
STORED ENERGY MAXIMUM 0.3 mJ
Io
Ib1
Ib2
PULSE SHAPER
Io:
45Apk
50%
200ns
LASER DIODE
Io
904nm
Tb
Io
Ib
Ib1
Ib2
Vc
150
0
LASER PROBE MODELS 24*

Property of: UNIPHY B.V. THE NETHERLANDS
Drawn by: N.H. Beun
Approval:

Title 790 LASER GENERATOR		
Size B	Document Number 7900BLK3.SHT	REV D
Date: December 15, 1997	Sheet 5 of 38	