QUICK REFERENCE GUIDE

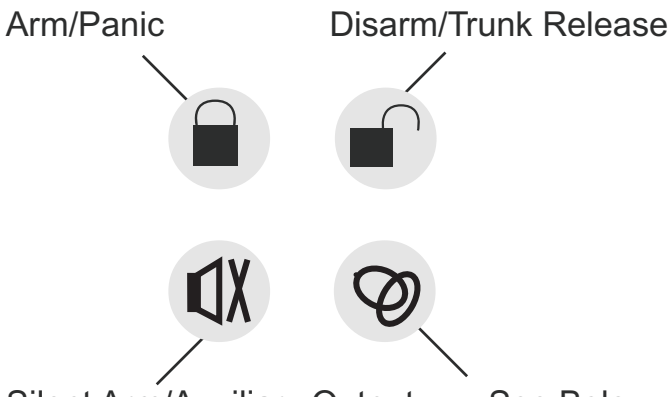

+ Continuation Mode

+ Remote Start ON/OFF

+ Remote Start Time Mode

+ Turbo/Reservation Mode

ONE WAY VEHICLE SECURITY AND ENGINE STARTER SYSTEM USER'S GUIDE

Ultra-long FM remote control range
(One-way range up to 800m)

Compatible with factory security system

Code hopping technology for anti-scanning and anti-grabbing

Long-range remote engine start (Optional)

MANUAL FOR OPERATION AND INSTALLATION

Please read this manual carefully before operate and install the machine

2006.1.21, 11:27

Table of Contents

Introduction 2
Standard Transmitter Configuration 3
Features Description 4
Standard Arming Mode 4
Silent Arming Mode 4
Multi-level Security Arming 4
Disarming 5
Security Rearming (Programmable) 5
Panic Mode 6
Door Status Warning (Programmable) 6
Trunk Release 6
Central Lock Automation (Programmable) 6
Passive Arming and Passive Locking 6
Arming Reminder 7
Smart LED Indicator 7
Automatic Windows Rolling-up 7
Auxiliary Output (Programmable) 7
Status Memory 7
Automatic Dome Light 7
Remote Engine Start (Must need remote start module) 8
How to Drive Your Remote Started Vehicle 8
Remote Shut Down 9
Continuation Mode (Remote start model only) 9
Turbo/Short Run (Remote start model only) 9
Remote Start Timer Mode (Remote start model only) 10
Valet Mode 10
Disarming without a Transmitter 11
Code Hopping 11
System Installation 11
Installation Guide for Receiver 12
Harness Description 13
Peripheral Plug-in Connectors 16
Door Lock Wiring Diagram 17
Features Programming Rountine 19
Checklist of Options 20
Transmitters Code Learning Routine 20
Quick Reference Guide for System Wiring 21
Limited Warranty 22

Introduction

Thank you for purchasing This Vehicle Security System.

This vehicle security system features a state-of-the-art technology and FM design to give you maximum safety and satisfaction in using the system.

1) Please read this manual carefully before using this car alarm so that you均l take the full advantage of every marvelous features provided by the system.

2) The local authorized dealer is responsible for the service and warranty.

3) The system requires no specific maintenance. Your transmitter is powered by a small 12volt 23A lithium battery. When the battery weakens, operating range will be shortened and the LED on the remote will dim.

4) This device complies with part 15 of FCC rules. Operation is subject to the following two conditions: (1). This device may not cause harmful interference, and (2) This device must accept any interference received, including interference that may cause undesired operation. Changes or modifications not expressly approved by the party responsible for compliance

5) Due to the complexity of this system, it must be installed by an authorized dealer only.

6) All the modules and interconnection cables are inaccessible to the end user except the remote control, the one-way receiver and its signal cables.

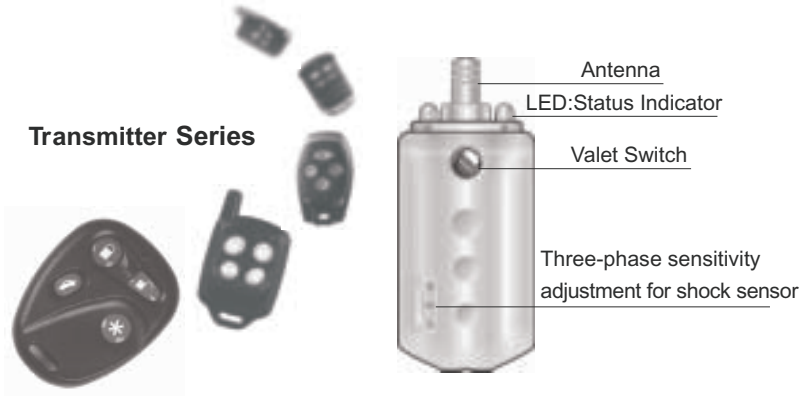

4-5
2006.1.21, 11:27

Standard Transmitter Configuration

BUTTON	TIME PRESSED	STATUS APPLICABLE	FUNCTION
🔒	0.5s	NORMAL	ARM AND LOCK
🔒	0.5s	DRIVING	LOCK
🔒	2.0s	NON-DRIVING	PANIC MODE
🔒	2.0s	DRIVING	ANTI-ROBBERY
🔒	0.5s	ALARMING	STOP ALARMING
🔓	0.5s	ARMED/STARTED	DISARM AND UNLOCK
🔓	0.5s	DRIVING	UNLOCK
🔓	2.0s	ARMED AND NORMAL	TRUNK RELEASE
🔇	0.5s	NORMAL	SILENT ARM AND LOCK
🔇	2.0s	NORMAL	AUXILIARY CHANNEL 5 OUTPUT
🔇 + 🔇	0.5s	ARMED	REMOTE START TIMER MODE
🔇 + 🔓	0.5s	ARMED	REMOTE START ON/OFF
🔇 + 🔒	0.5s	DRIVING	CONTINUATION MODE
🔇 + 🔇	0.5s	DRIVING	TURBO MODE

Notes:

1. Normal status means disarmed and ignition key off.
2. “+”means press the buttons in sequence within 2 seconds.

Features Description

Standard Arming Mode

In normal status, press button 🔒 for 0.5s, the system will be armed and the doors will be locked with one siren chirp and one light flash. The starter kill relay becomes engaged to avoid unauthorized car starting and the LED begins flashing.

If you hear three more chirps after arming, maybe you need to re-check the doors to see whether they are properly closed. This chirp is called door zone bypass notification. This notification is given out when some door is not closed properly or if your car has a dome light delay. After the notification, the system will delay to monitor the door zone for an additional 20 seconds or until the dome light turns off.

When armed, your vehicle is protected as follows:

1) Light impacts will trigger pre-warning signal. When triggered, the siren will chirp for 3s and the parking light will flash twice.

2) Heavy impacts will triggered the system to sound the siren and flash the lights for 15s.

3) If a door/hood/trunk is opened, the system will immediately start chirping the siren and flashing the parking lights for a period of 30s.

4) Turning on ignition key will triggered the same response as opening a door.

5) If you select to install a Field Disturbance Sensor, such as a microwave sensor, the system can react to any intrusions into the field with the full triggered sequence.

Silent Arming Mode

In normal status, press button 🔇 for 0.5s to activate silent arming with one light flash. In silent arming mode, there will be no siren chirp confirmation when arming or disarming, also the pre-warning response to light impacts is bypassed. This ensures that no chirps will be emitted by the siren in an area you want chirp-free. The system is still fully capable of triggering except the pre-warning response bypassed.

Multi-level Security Arming

Multi-level Security Arming allow you to select which of the systems inputs or sensors will be active and which will be bypassed when the system is armed. Pressing Button 🔓 again within five seconds of arming the system will activate the Multi-

6-7
2006.1.21, 11:27

level Security feature. Each time Button 🔒 is pressed again, a different security level is selected. The different security levels are selected as follows:

Press Button 🔒 once: The siren chirps once. The system is armed. All zones are active. LED indicator blinks once and then pauses for 2.0 seconds and then repeats.

Press Button 🔒 a second time within 5 seconds: The siren chirps once again. The shock sensor zone is now bypassed. LED indicator blinks twice with a two-second pause and then repeats.

Press Button 🔒 a third time within 5 seconds: The siren chirps one more time. The Optional sensor zone (Microwave sensor zone) is now bypassed. LED indicator blinks three times with a two-second pause and then repeats.

Press Button 🔒 a fourth time within 5 seconds: The siren chirps one more time. The Shock sensor zone and Microwave sensor zone are now bypassed. LED indicator blinks four times with a two-second pause and then repeats.

Press Button 🔒 a fifth time within 5 seconds: The siren chirps one more time. The Shock sensor zone, Microwave sensor zone and Hood Pin Switch input are now bypassed. LED indicator blinks five times with a two-second pause and then repeats.

Note: Multi-level Security Arming only applies to a single arming cycle. Once the system is disarmed and then re-armed, all the zones (inputs) will be active again.

Disarming

Tamper Alert: If you hear four additional siren chirps and light flashes, please check your car to see whether the security system was triggered in your absence.

The system will be disarmed and the door will be unlocked with two siren chirps and two light flashes if press button 🔓 for 0.5s. When disarming, if you hear two additional siren chirps and light flashes, please check your car to see whether it has been suffered with bumps. This is called trigger reminder.

Security Rearming (Programmable)

The system will re-enter into last arming mode automatically if no door is opened or ignition is still off within 35s after disarmed by remote. This feature is to protect

your car from theft even when your car is disarmed by accident.

Panic Mode

If you are threatened in or near your vehicle , or if you want to identify the parking location of you car, press button 🔒 for 2.0s, and you will enter Panic Mode. The siren will sound for 16s with light flashing. To stop Panic Mode at any time, press button 🔒 for 2.0s again or press button 🔓 for 0.5s.

Door Status Warning (Programmable)

The lights will flash to inform you that some door is not closed well. When temperately parking, such flashing may warn coming cars to take care. It is suggested to cancel this feature when your car has a dome light delay.

Trunk Release

Press button 🔓 for 2.0s to open the trunk. You may select whether disarm and unlock doors when trunk released by options.(This function is suitable for cars with electric trunk opener)

Central Lock Automation (Programmable)

This function enables your vehicle to automatically lock the doors upon pressing brake pedal after ignition is on and unlock the doors upon key off. During driving, you may also press button 🔒 to lock or button 🔒 to unlock without activating security mode.

Passive Arming and Passive Locking

The system also can be programmed to arm itself automatically (call passive arming). Once passive arming is enable, the system will arm itself in 40 seconds every time after the system "sees" you turn ignition off and leave your car by opening and closing the doors. If passive locking function is enable, the system will lock doors at the same time when entering passive arming.

8-9 2006.1.21, 11:27

Arming Reminder

The system also can remind you of arming the system if you forgot to do so. The system will give out three siren chirps with light flashes 20 seconds after you turn off the ignition key and close all the doors. After hearing the audible reminder, you should press button 🔒 to arm and lock.

Smart LED Indicator

In arming status: LED flashes the same number as the times of pressing button within 🔒 5 seconds.

In turbo state: LED stays solid for 2 seconds, then pause for 2 seconds.

In valet mode: LED stays solid.

ACC, Door, Hood/Trunk triggered: LED stays solid for 0.5 seconds, then pause for 0.5 seconds.

Automatic Windows Rolling-up

This system supplies a windows rolling-up feature. The system will roll up all the windows at the arming command to ensure safety of your vehicle. (A windows rolling-up module may be necessary. Please contact your local dealer for details)

Auxiliary Output (Programmable)

Pressing button 🔇 for 2.0s will activate auxiliary channel 5 output, which is programmed to output pulse of 0.5 seconds or 15 seconds or latched,reset with ignition. This design is to increase your comfort. It can be programmed to operate trunk, windows, sunroof etc. Please contact your dealer for details.

Status Memory

This system may remember the status before power off so as to restore the former working status such as arm mode , disarm mode and Valet mode, even if the power supply is destroyed.

Automatic Dome Light

The system will turn on the dome light every time you disarm your system. The dome light will go out 30 seconds later or immediately go out after you turn the ignition on.

Remote Engine Start (Must need remote start module)

Remote start makes it possible to warm up the engine, as well as adjust the interior temperature of the vehicle. If interior heating or cooling is desired, the climate controls must be preset, and the fan blower must be set to the desired level prior to remote staring the vehicle.

1) In arming mode, press button 🌀 for 0.5s and then press button 🔓 for 0.5s to activate the remote engine start function.

2) The siren will chirp once and parking lights flashes once.

3) In gasoline vehicles, the engine will wait 6 seconds after the parking lights flash. In diesel vehicles, the engine will start when the WAIT-TO-START indicator on the vehicles dash goes out.

4) Once the vehicle has started, it will run for the pre-programmed period of time (either 15 or 25 minutes) or until a shut-down input is triggered.

Notes:

1.The parking lights will flash every 30 seconds during the engine is running.

2. Never start the vehicle if it is not in either PARK or NEUTRAL position and never forget to activate the parking brake before remote start.

3. For manual transmission vehicles, only when you've been setting the reservation mode, you can start your vehicle.

4. It is unsafe to remote start the vehicle in a garage or other enclosed area. Breathing the exhaust from the vehicle is hazardous to your health.

How to Drive Your Remote Started Vehicle

When you are ready to drive the vehicle:

1) Press button 🔓 0.5s to unlock and disarm and open the door.

2) Insert the ignition key and turn it to the ON (not the START) position in 30 seconds.

3) Press the brake pedal

10-11 2006.1.21, 11:27

Note: If the brake pedal is pressed before the key is in the ON position, the engine will shut down.

Remote Shut Down

While the vehicle is running during remote start operation, the system will monitor the vehicle and will automatically shut down the engine if the system receives any of the following shut-down inputs:

1) The brake pedal is pressed.
2) The hood is opened.
3) The pre-programmed run time (15 or 25 minutes) has elapsed.
4) Press button and button again.
5) The TACH or Oil sensor or High voltage signal disappear.

Continuation Mode (Remote start model only)

While driving, if you press button 0.5s and then button 0.5s, you are now in the continuation mode with 5 chirps from the horn and 5 parking lights flashes. The engine will continue running for 10 minutes even if you take your key from the ignition. This mode is useful for occasions when you wish to exit and lock the vehicle with button 0.5s for short periods of time, but would like to leave the motor running and climate controls on, for example, a grocery store. To exit Continuation Mode, press button 0.5s and then button 0.5s again, or press button 0.5s to disarm the system, turn the ignition key on and then press the brake pedal.

Turbo/Short Run (Remote start model only)

Turbo mode keeps the engine running after arriving at your destination for a programmed period of 1, 2, or 3 minutes. This allows the systems timer to conveniently cool down the turbo after you have left the vehicle.

To activate:

1. Park the vehicle and set parking brake.
2. Remove your foot from the brake pedal and leave the engine running.
3. Press button 0.5s and then button 0.5s
4. The siren will chirp three times with three light flashes.
5. Turn off the ignition key, the engine will keep running.

6. Exit and secure the vehicle. Press button for 0.5s.
7. The engine will turn off after the programmed run time.

Note: Once you activate the short-run turbo mode,the system will remain this mode always. If you don't want this mode any more, press button + again to cancel it anytime.

Remote Start Timer Mode (Remote start model only)

In arming state, press button 0.5s and then button 0.5s to activate the Remote Start Timer Mode. The siren will chirp 4 times and parking lights flash 4 times.

In this mode, the system will start the engine every 3 hours, for a maximum of six cycles. The engine will run for the programmed run time and then shut down to keep engine warm in the cold weather. The remote start command + can shut down the engine in timer mode, but the system will remain in the timer mode. To exit timer mode, do one of the following:

a. Timer mode is exited automatically after the sixth run cycle.
b. Press button 0.5s and then button 0.5s again.
c. Press button 0.5s to disarm the system, turn the ignition key on and then press the brake pedal.
d. If any other shut down zones or alarm has been triggered, the timer mode will exit.

Valet Mode

Valet mode is used when washing the vehicle or having it serviced. In Valet Mode, the security system works just as a keyless entry (door lock/unlock, trunk release, car finding) without any security functions.

To enter or exit Valet mode:

1.Turn the ignition on.
2.Press and hold the Valet Switch for 3 seconds
3.Siren chirps three times and lights flash three times.
4.LED turns on solidly.
5.Repeat step 1,2 to exit Valet Mode, LED goes out.

12-13 2006.1.21, 11:27

Disarming without a Transmitter

If your remote is lost, damaged or any other reason cause you can not control your security system, you can manually disarm your vehicle security system.

1.Turn the ignition on.

2.Within 5 seconds, press and release the Valet Switch button for over 5 times.

3.Siren chirps twice, lights flash twice, all alarm are released, system returns to disarm state.

Code Hopping

This system uses code hopping technology to increase the security of the alarm. In case the remote falls out of sync with the main control unit, you may do the transmitters code learning routine to make the main control unit re-sync the transmitter automatically.

System Installation

1. Due to the complexity of this system, installation must only be performed by an authorized dealer.

2. Thoroughly read and become familiar with the installation instructions before beginning the installation.

3. Review system contents:

   a. Main Control Unit

   b. Siren

   c. One-way receiver with built-in Shock Sensor and Valet Switch

   d. Starter Kill Relay

   e. Remote Starter Module with 5-pin Starter Harness.

   f. Harness.

4. Verify vehicle is equipped with electronic fuel injection, and starts/idles normally before installation.

5. Determine if vehicle is equipped with a factory theft deterrent system and obtain proper bypass module if required.

6. Find a location to mount the hood pin switch that will not interfere with the opening of the hood, and is not in a position that can accumulate water. The hood pin is a safety device that must be installed to avoid remote starting during engine servicing.

7. Verify with the owner, the mounting locations for all visible components, including the LED and Receiver.

8. Verify with the owner, the optional features of vehicle security system and the features that must be programmed during installation.

9. Inspect and perform a function test of all vehicle systems before and after the installation.

10. Always use a Volt/ohm meter for testing vehicle circuits. Never use a test light.

11. Always look before drilling any holes or mounting self-tapping screws. Be sure fuel lines and exterior wiring looms are clear as they are often close to the chassis and difficult to see.

12. Protect all wires running from the engine compartment to the interior of the vehicle by covering with electrical tape and split loom tubing. Be sure to use a grommet when routing wires through the firewall.

13. Properly fuse any additional accessories such as starter module, window module, door lock actuators, etc., Making sure to power them separate from the alarm Main Unit. This will ensure the functionality of the security system in the event of an accessory failure.

14. Remove all fuses to avoid running down the battery during installation.

vehicle.

Installation Guide for Receiver

The mounting place of receiver has a substantial influence upon the communication range of the system. It is recommended to install the receiver to left-upper side (left-steering wheel)

note to clean the mounting position with a wet cloth in order to glue the receiver firmly.

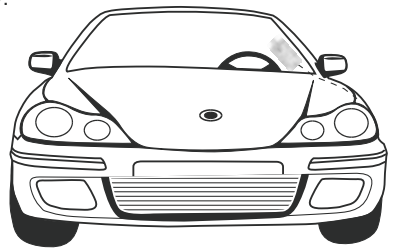

Hide the wire by carefully pushing it inside the space of the front windows blind mold trim.

14-15

2006.1.21, 11:28

Harness Description

5 Heavy Gauge Starter Harness in the Starter Module (Ignition Switch Interface)

Purple Wire: Starter Output (+). Connect to the vehicle's starter wire.

ORANGE WIRE: Accessory Output (+). Connect to the accessory wire coming from the ignition switch that supplies power to the heater/air-conditioner. Some cars may have multiple accessory wires.

PINK WIRE A: Ignition Output (+). Connect to the main ignition wire that provides +12V when the ignition is on and while cranking the starter.

PINK WIRE B: Second Ignition Output (+). Connect to the second ignition wire of the vehicle.

RED WIRE: Main Power Input (+). Connect to the battery or constant power wire at the ignition switch with a minimum 30 Amp supply. Remove the fuse until the installation is completed and all wiring is checked.

7-pin Connector Secondary Harness for Remote Start(H4)

Pin1-3: Factory wiring to the remote start module.

Pin4: BLUE/WHITE WIRE: (-)200ma bypass output when remote start. Connect this wire to the interface of Remote Start Bypass Module.

Pin 5: GREY/ BLACK WIRE: Diesel wait-to-start bulb input. (-) Connect this wire to the wire in the vehicle that sends the signal to turn on the WAIT-TO-START bulb in the dashboard. In most diesels, the wire is negative (ground turns on the bulb) and the GRAY/BLACK wire can be directly connected to the wire in the vehicle. If the vehicle uses a positive wire (12V to turn on the bulb), you must set the proper signal polarity in the options list(Features #12).

Pin 6: BLACK/WHITE WIRE: (-)Neutral Safety Switch Input. Connect this wire to the PARK/NEUTRAL switch in the vehicle. This wire will test with ground with the gear selector either in PARK or NEUTRAL. This will prevent the vehicle from accidentally being started while in a drive gear. This input MUST rest at ground in order for the remote start system to operate. Connected properly the vehicle will only start while in PARK or NEUTRAL. You may also connect this wire to the Parking Brake Switch.

Pin 7: VIOLET/WHITE WIRE: Oil Sensor signnal (Default), High-Voltage Sensing/Tachometer input (OPtional). This input provides the module with information about the engines resolu tion per minute (RPMs). Connect to the vehicle's tach wire. Common locations for a tachometer wire are the ignition coil, instrument cluster,

fuel injectors, or engine computers. The correct wire shows between 1V to 6V (AC) and fluctuates with the idle of the engine when testing with a multi-meter capable of testing AC voltage.

Note: This wire has the same function with the High-Voltage sensing input, so it is a alternative solution when voltage sensing input does not supply satisfactory operation. If connect to the High-Voltage sensing input, you must coil this wire five loops onto the High-Voltage from the engine distributor.

10-Pin Connector Primary Harness (H1)

Pin 1: BROWN WIRE: Siren Output (+). The brown wire must connect to the red wire of the siren. The black wire must be grounded.

Pin 2: WHITE WIRE: Parking Light Output (+/-) Relay. Connect this wire to the circuit that shows +12V or ground only when the parking lights are on and set the internal parking light relay jumper to the proper polarity. For parking light circuits exceeding 10 Amps, a relay is required. For vehicles with independent left and right parking light circuits, diodes must be installed to keep the circuits separate.

Note: Do not connect the white wire to the vehicles headlight circuit.

Pin3: Violet: Unlock #87a Normally Closed

Pin4: Blue/Black: Unlock #30 Common (Output)

Pin5: Brown/Black: Unlock #87 Normally Open (Input)

Pin6: Violet/Black: Lock #87a Normally Closed

Pin7: Green/Black: Lock #30 Common (Output)

Pin8: White/Black: Lock #87 Normally Open (Input)

Pin9: Red: Constant +12V Input. Connect this wire to the battery or Constant Power wire at the Ignition Switch with a 15Amp Supply.

Pin10: Black: System Ground. Connect this wire firmly to the Chassis Ground.

6-pin Secondary Harness for Outputs(H2)

Pin 1: ORANGE WIRE: Armed Output (-) 500mA. The orange wire supplies a ground output while armed to activate a relay for starter defeat and anti-grind protection.

16-17 2006.1.21, 11:28

Pin 2: BLUE WIRE: Second unlock (passenger unlock)output (-) 200mA This system is equipped with a dedicated passenger unlock output allowing two stage door lock operation. When connected this wire, disarming the system will unlock only the driver s door. Pressing the disarm button again will unlock all doors..

Pin 3: WHITE/BLACK WIRE: Auxiliary Channel 5 Output (-) 200mA. This wire provides a (-) 200mA output whenever the transmitter button is pressed for 2S. This output can be programmed to provide the following types of outputs:

a. 0.8-second timed: Output that will send a ground pulse of 0.8 second.

b. 15-second timed: Output that will send a ground continuous pulse for 15 seconds.

c. Latched,reset with ignition: Output that will send a signal when the Channel 5 button (button) is pressed and will continue until the same button (button) is pressed again. It additionally stops output whenever the ignition is turned on.

Pin 4: PURPLE/BLACK WIRE: Auxiliary 4 Output (-)500mA for windows rolling-up option. Connect to a power window module.

Pin 5: BLACK/WHITE WIRE: Dome Light Output (-) 500mA. Connect to the wire that activate the vehicle's dome light, usually the door pin switch wire. Note: the dome light output can usually connect to the same wire used for the door trigger input (see purple and green door input wire).

Note: This output is only intended to drive a relay. It can not be connected directly to the dome light circuit, as the output cannot support the current draw of one or more light bulbs.
Never use this wire to drive anything but a relay or a low-current input. The transistorized output can only supply 200mA of current. Connecting directly to a solenoid, motor, or other high-current device will cause it to fail.

Pin 6: RED/WHITE WIRE: Vehicle Trunk Release Wire (-)500mA. Connect this wire to the electronic trunk opener. (Relay may required).

8-pin 2510 Harness for Inputs and Outputs(H3)

Pin 1: GREEN/BLACK WIRE: Factory Disarm Output (-) 500mA. This wire provides a ground output on disarming and before remote starting to disarm a factory security system. Connect to the wire that requires a ground pulse to disarm the factory security system.

Pin 2: GREEN/WHITE WIRE: Factory Rearm Output (-) 500mA. This wire supplies a ground output on remote start shutdown to rearm a factory security system. Connect to the wire that requires a ground pulse to rearm the factory security system.

Pin 3: BLACK WIRE: Optional Sensor Input (-).Connect to an optional instant sensor such as trunk pin switch.

Pin 4: GREY WIRE: Hood Pin Input (-). Connect this wire to the hood pin switch. The switch must supply a ground output(-)when switch is opened. This input will disable or shut down the remote start when the hood is opened. It will also trigger the security system if the hood is opened while the system is armed.

Pin 5: BROWN WIRE: Brake Input (+). Connect to the wire that shows +12V when pressing the brake. The brown wire is a safety shutdown wire that must be connected.

Pin 6: YELLOW WIRE: (+) Ignition Input of the Key Cylinder to Alarm. Connect to the ignition wire that provides +12V when the ignition is on and while cranking the starter.

Pin 7: GREEN WIRE: Negative Door Input (-). Most vehicles use negative door trigger circuit. Connect the green wire to the wire that shows ground when any door is opened. In vehicles with factory delays on the dome-light circuit, there is usually a wire that is unaffected by the delay circuit.

Pin 8: PURPLE WIRE: Positive Door Input (+). Connect to the door switch circuit wire that shows +12V when any door is opened. This type of door circuit is usually found on Ford Vehicle.

Peripheral Plug-in Connectors

7-PIN White Connector: One-way Receiver Port

3-PIN Black Connector: Optional Sensor Input port, for example, the Microwave Sensor.

2-PIN White Connector: LED Port. Mount LED in an area where it may be easily seen from either side of the vehicle.

18-19 2006.1.21, 11:28

Door Lock Wiring Diagram

Negative Triggered, Relay-Driver Systm

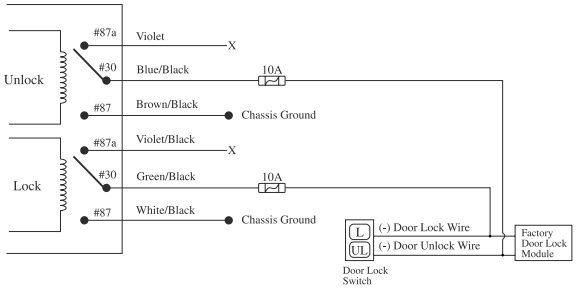

Positive Triggered, Relay-Driver System

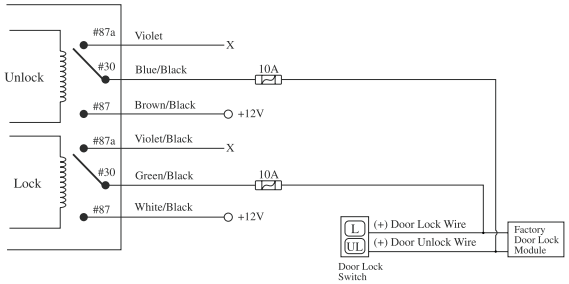

Reverse Polarity

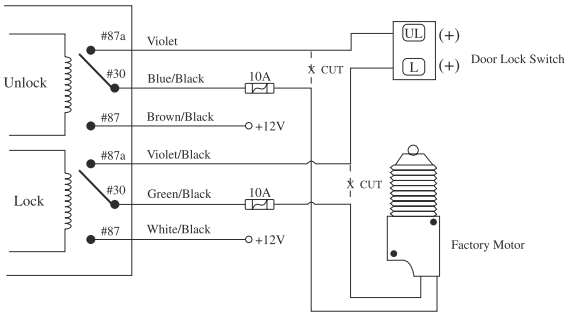

Vacuum Type

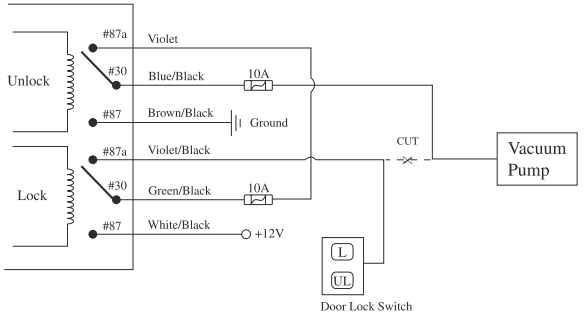

Adding Actuators

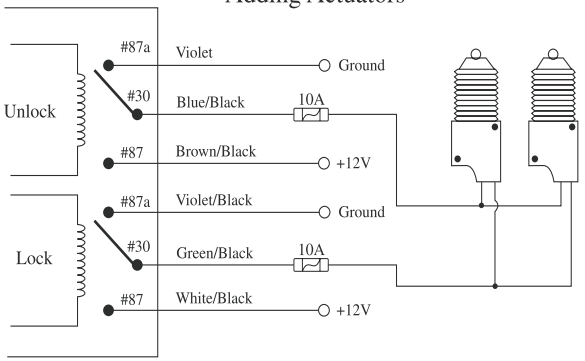

Positive Multiplex

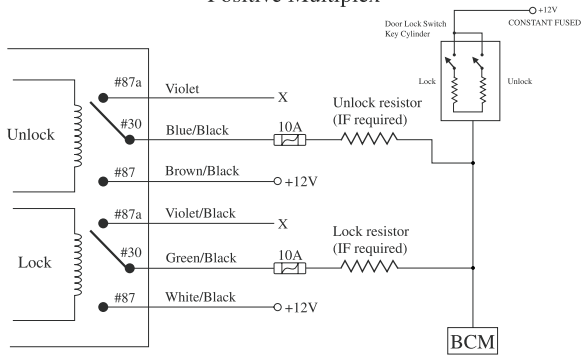

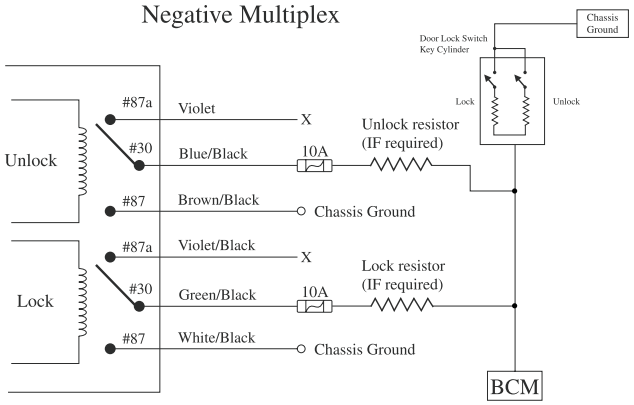

Features Programming Rountine

Step 1: In the disarming state, turn the ignition key to the "OFF" position, then press and release valet switch for 5 times rapidly within 10 seconds. The siren will chirp four times and parking lights will flash four times , which indicate features programming mode is activated. In this mode, the LED goes out.

Step 2: Press and release the valet switch the same number of times as the desired features number of which is going to be programmed. Status LED flashes the same number of times following by a 1.5 second pause.

Step 3: Press button 🔒 to select the first option, siren will chirp once and lights will flash once. Press button 🔓 to select the second option, siren will chirp twice and lights will flash twice. Press button 🔇 to select the third option, siren will chirp three times and lights will flash three times.

Note: Repeat step 2 and step 3 for each feature to be changed. If no programming active within a 10 second period, the Features Programming Mode will expire.

Checklist of Options

Features #	Option1(Default)	Option2	Option3
1.Power motor/Vacuum door locking system	Power motor (0.8s pulse)	Vacuum (3.5s pulse)	
2.Single/double pulse unlock	Single	Double	
3.Automatic rearming	ON	OFF	
4.Auto door lock/unlock when ignition is on	ON	OFF	
5.Parking lights flash when door opened in disarm mode	ON	OFF	
6.Passive Arming	OFF	ON	
7.Passive locking in passive arming mode	OFF	ON	
8.Auxiliary Channel 5 Output	0.8 second pulse	15 seconds pulse	Latched output
9.Disarm when trunk release	ON	OFF	
10.Parking Lights Flashing/Constant	Flashing	Constant	
11.Gasoline/Diesel Engine Start	Gasoline	Diesel	
12.Glow plug polarity of Diesel	Negative	Positive	
13.Engine Run time	15 min	25 min	
14.Short Run/Turbo	1 min	2 min	3 min

Transmitters Code Learning Routine

You may program a new transmitter if the original one was lost or damaged, but remember to delete the data of the lost transmitter from the Main Unit for safety purpose.

Step 1: In disarming state, turn the ignition key to “ON” position, and then press and release the Valet Switch for over 5 times, the LED will flash rapidly to indicate that transmitter learning mode is activated.

Step 2: Within 6 seconds, Press the button 🔒 0.5s and then press the button 🔓0.5s of the pre-programmed transmitter. Siren will chirp 5 times and parking lights will flash 5 times to confirm that the new transmitter code learning has been successful.

Step 3: Repeat Step 1 and Step 2 again to do the second new transmitter code learning.

Note: If no button is pressed within 10 seconds, the system will exit code learning mode without changing the original transmitter.

ﾄﾗﾝｽﾃﾞｯｸｽ 22-23 2006.1.21, 11:28

Quick Reference Guide for System Wiring

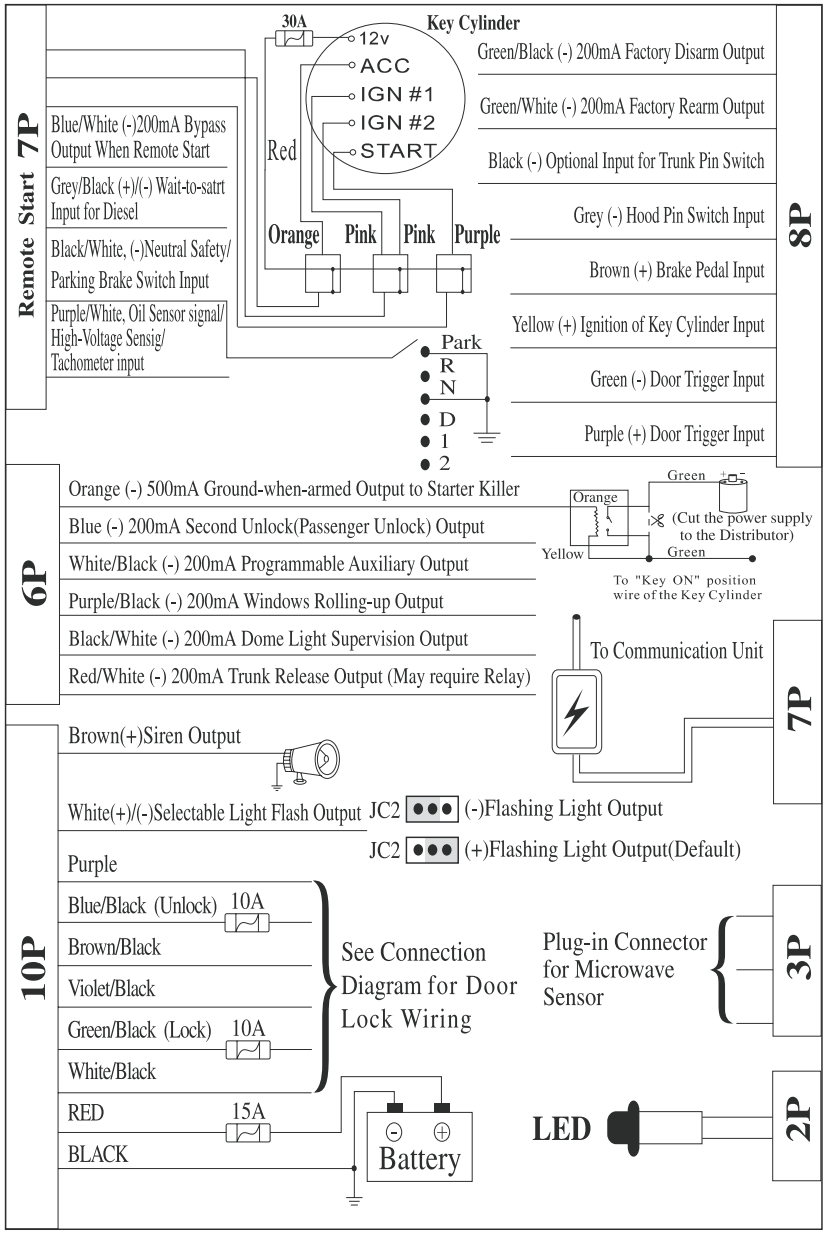

Limited Warranty

This Alarm & Starter product is warranted against manufacturing defects in material and workmanship for 180 days from the date of purchase from the authorized Dealer.

During the period, the Dealer will repair the products without charging the parts and labor cost.

The warranty does not cover damage or failure caused by or attributed to Act of God, abuse, misuse, improper or abnormal usage, improper maintenance, lightning, or other incidence of excess voltage, or any repairs other than those provided by the

When warranted time is expired, Dealer will repair the products only charging the parts cost.

Purchase Information

Name of Dealer_____

Address_____

Zip Code_____

Phone_____ Fax_____

Date of Purchase_____

Signature of Installation Engineer_____

Product Information

Model_____

Type of Vehicle_____

Serial number of Remote Control#1_____

Serial number of Remote Control#2_____

24-25 2006.1.21, 11:28