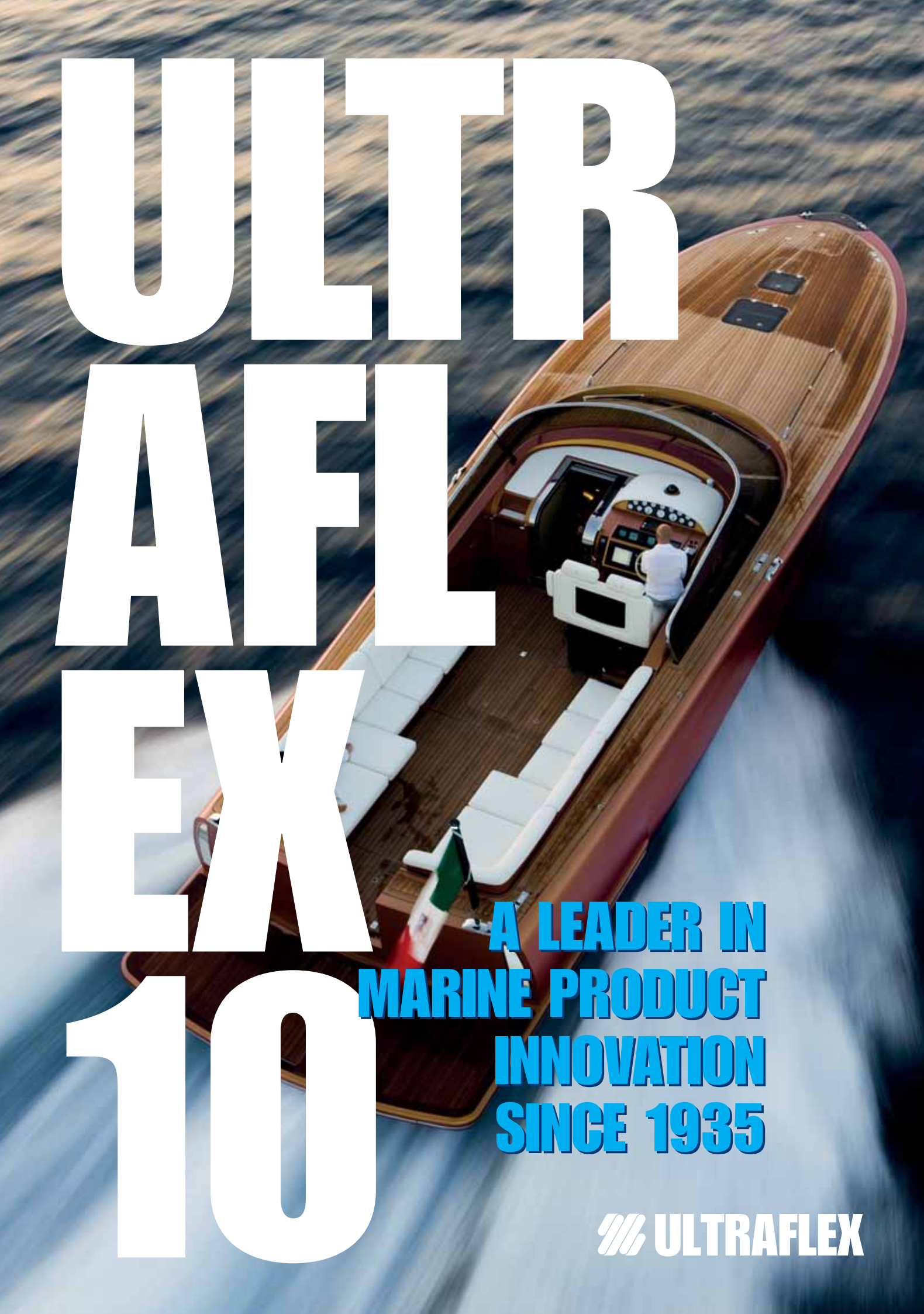
ULTRAFLEX
10
A LEADER IN
MARINE PRODUCT
INNOVATION
SINCE 1935
ULTRAFLEX

NEW10



UP45 - 45 cc helm pumps page 40-43



UP39-SVS page 53



SilverSteer™ tilt mount helm pumps page 54



X70-SVS tilt mechanism for SilverSteer™ helm pumps page 54



Santorini B/S page 76

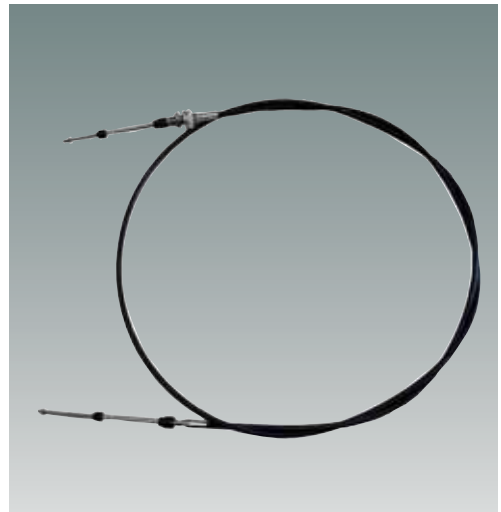

Control cable for Jet Weber® engines page 103

ULTRAFLEX GROUP



1935 - 2009

Ultraflex Group has 74 years of experience in manufacturing and distributing the highest quality and most innovative products. The Ultraflex Group affiliate Companies that design and produce widely known equipments in the marine, industrial, architectural, Led technology and alternative energy fields.

ULTRAFLEX

Steering and control systems for pleasure boats

UFLEX

Worldwide distribution of marine accessories

UFLEX - Divisione energia

Systems and accessories for alternative energy applications

ULTRAFLEX CONTROL SYSTEMS

Window and skylight remote controls. Innovative LED road signs

INDUSTRIA di LEIVI

Mechanical remote controls in the industrial field

UFLEX USA

Manufacturing the world's finest marine products

MARESI LTD

Magnetic compasses



Factory in Casella



Factory in Borgo Fornari

Quality Management System

The Ultraflex Quality Management Systems is certified CISQ-IQNet by the Italian Shipping Registry (RINA), in conformity with the UNI EN ISO 9001:2000 rule. Ultraflex certification n° 6669/02/S (former 420/96). The quality management system involves all the company resources and processes starting from the design, in order to:

- Assure product quality to the customer
- Set up the actions to maintain and improve the quality standards constantly
- Pursue a continuous process improvement to meet the market needs

The Ultraflex Environmental Management System is certified CISQ-IQNet by the Italian Shipping Registry (RINA), in conformity with the UNI EN ISO 14001:2004. Ultraflex certification n° EMS-1282/S.

Constantly test the products to verify their conformity with the EEC 94/25 and ABYC (American Boat and Yacht Council) requirements.

Member of CISQ Federation
RINA
ISO 9001:2000
Certified Quality System

SOCIO UCINA

MEMBER OF NMMA
National Marine Manufacturers Association

Member of CISQ Federation
RINA
ISO 14001
Certified Environmental System



GUARANTEE CONDITIONS

page 4



Power E™ - Power A™ Power C™ - ELECTRONIC CONTROL SYSTEMS

page 5 to 16



MECHANICAL STEERING SYSTEMS

page 17 to 33



PACKAGED MECHANICAL STEERING SYSTEMS

page 34



HYDRAULIC STEERING SYSTEMS CROSS REFERENCE

page 35 to 37



BubbleBuster™ AUTOMATIC FILLING AND PURGING SYSTEM

page 38



HELM PUMPS

page 39 to 43



OUTBOARD STEERING

page 44 to 51



PACKAGED OUTBOARD STEERING SYSTEMS

page 52



SILVERSTEER™ HIGH PERFORMANCE STEERING SYSTEM

page 53 to 58



TIE BARS FOR OUTBOARD TWIN ENGINES

page 59 to 60



STERNDRIVE STEERING

page 61 to 62



INBOARD STEERING

page 63 to 66



ACCESSORIES FOR HYDRAULIC STEERING SYSTEMS

page 67 to 70



STEERING WHEELS

page 71 to 86



SINGLE AND TWO LEVER ENGINE CONTROLS

page 87 to 101



ENGINE CONTROL CABLES

page 102 to 106



SPARE PARTS

page 107 to 109

The descriptions and guidelines shown in this catalogue should be used as general reference only. For any further information please contact our Technical Service.
Ultraflex S.p.A. declines any liability for possible mistakes in this catalogue due to printing errors. Ultraflex S.p.A. reserves the right to make those modifications that are considered to be suitable for its products.
Publishing rights, trade marks, part numbers and photographs of the Ultraflex products present on this catalogue are Ultraflex property and all rights are reserved.



RINA
www.rina.org

CERTIFICATO N. 6669/02/S
CERTIFICATE No

SI CERTIFICA CHE IL SISTEMA DI GESTIONE PER LA QUALITÀ DI
IT IS HEREBY CERTIFIED THAT THE QUALITY MANAGEMENT SYSTEM OF

ULTRAFLEX S.p.A.
VIA CROSE 2 16015 CASELLA GE ITALIA

NELLE SEGUENTI UNITA' OPERATIVE / IN THE FOLLOWING OPERATIONAL UNITS
VIA PONTASSO 24, 16015 CASELLA GE

E' CONFORME ALLA NORMA
IS IN COMPLIANCE WITH THE STANDARD

ISO 9001:2000

PER I SEGUENTI CAMPI DI ATTIVITÀ / FOR THE FOLLOWING FIELD(S) OF ACTIVITIES EA: 20

PROGETTAZIONE E REALIZZAZIONE DI SISTEMI ED ACCESSORI PER LA NAUTICA
DESIGN AND CONSTRUCTION OF MARINE SYSTEMS AND ACCESSORIES

Prima Emissione / First Issue 08.04.2002
Emissione corrente / Current Issue 23.05.2003

Dott. Ing. Domenico Andreis
(Direttore Certificazione e Servizi Industriali)

RINA SpA
Via Corsica 12 - 16128 Genova Italy

SINCERT

CISQ is a member of IQNet



RINA
www.rina.org

CERTIFICATO N. EMS-1282/S
CERTIFICATE No

SI CERTIFICA CHE IL SISTEMA DI GESTIONE AMBIENTALE DI
IT IS HEREBY CERTIFIED THAT THE ENVIRONMENTAL MANAGEMENT SYSTEM OF

ULTRAFLEX SPA

VIA CROSE 2 16015 CASELLA (GE) ITALIA

NELLE SEGUENTI UNITÀ OPERATIVE / IN THE FOLLOWING OPERATIONAL UNITS

VIA CROSE 2 16015 CASELLA (GE) ITALIA
VIA MILITE IGNOTO 8A 16012 BUSALLA (GE) ITALIA
VIA PONTASSO 24 16015 CASELLA (GE) ITALIA

È CONFORME ALLA NORMA
IS IN COMPLIANCE WITH THE STANDARD

ISO 14001:2004

PER I SEGUENTI CAMPI DI ATTIVITÀ / FOR THE FOLLOWING FIELD(S) OF ACTIVITIES

PROGETTAZIONE E REALIZZAZIONE DI SISTEMI ED ACCESSORI MECCANICI, IDRAULICI ED ELETTRONICI PER LA NAUTICA, TRAMITE ASSEMBLAGGIO ELETTRO-MECCANICO, LAVORAZIONI MECCANICHE E STAMPAGGIO PLASTICA

DESIGN AND CONSTRUCTION OF MECHANICAL, HYDRAULIC AND ELECTRONIC SYSTEMS AND ACCESSORIES FOR MARINE APPLICATIONS THROUGH ELECTROMECHANICAL ASSEMBLY, MECHANICAL MACHINING AND PLASTIC MOULDING

Prima emissione / First Issue 27.01.2006
Emissione corrente / Current Issue 27.01.2006

Dott. Ing. Domenico Andreis
(Direttore Certificazione e Servizi Industriali)

RINA SpA
Via Corsica 12 - 16128 Genova Italy

SINCERT

CISQ is a member of IQNet

ULTRAFLEX - GUARANTEE CONDITIONS AND EXCLUSIONS

Ultraflex products are guaranteed against defects in material or workmanship for a period of two years following the date of manufacture. If the Ultraflex products are installed and used on commercial boats the guarantee is limited to one year following the date of manufacture.

Defective products should be returned freight prepaid to the Ultraflex facility and must be accompanied by an Ultraflex issued Return Goods Authorization number.
Upon receipt, the product will be examined to determine the cause of defect. If the product is determined to have a defect in workmanship or material, it will be repaired or replaced at the Ultraflex discretion.
This guarantee does not cover labor.
This guarantee does not cover products that have been misinstalled or misapplied. Furthermore, it does not cover claims for direct or indirect damage.
We decline liability and exclude guarantee if products are improperly installed, misapplied, or misused.

Our products are not intended to be used in racing applications, therefore this guarantee does not cover our products if they are used for racing purposes.

Power E™, **Power A™** and **Power C™.** The "Power E™, Power A™ and Power C™ - User and Installation Manual" describes activities, operations, technical specifications which must be followed during the installation and/or usage of the product, in order to keep a valid warranty. Descriptions and drawings in that manual are suitable to allow installation and use of the product to skilled persons. In case of doubt and/or for any information, please contact our Technical Service.

ULTRAFLEX mechanical steering systems components as steering helms, steering cables and steering wheels are all marked CE in compliance with the EEC Directive 94/25 and the rules EN29775 - EN28848. Ultraflex hydraulic steering system components are all marked CE in compliance with the EEC Directive 94/25 and the rule ISO 10592. The CE Examination on the ULTRAFLEX steering systems has been carried out by an Institute certified by the European Commission.

We kindly remind you that on the boats marked CE it is compulsory to install steering systems with components marked CE (see art. 4 and 5 of Directive 94/25/CE).

We inform you the ULTRAFLEX guarantee is null and void if some ULTRAFLEX components are installed on a steering system together with products of other brands, with the exception of those brands clearly specified in our catalogue on page 21.

The descriptions and guidelines shown in this catalogue should be used as general reference only. For any further information please contact our Technical Service.

5

ELECTRONIC CONTROL SYSTEMS

Power & Control



ELECTRONIC CONTROL SYSTEM

Power E is an electronic control system with digital data transmission, based on CAN Bus, that allows the operator to control both electronic engine and electro-hydraulic shift (with solenoid) with a single control lever.
The system allows a smooth and perfect control and gives an immediate engine response for any situation in any sea conditions.

The system is designed for single or twin engine boats up to 164 ft (50 m) using one actuator and a single lever for each engine. The system is provided with a lever with the double function of throttle-shift and an electronic actuator.
Up to 7 control stations for single or twin engines can be installed. The pre-assembled electric cables and an easy to use configuration software guarantee fast and easy installation. An audible and visual diagnostic system on board shows any system failure in an easy and quick way.

On twin engines system, it is possible to automatically synchronize the rpm of the two engines to reduce their fuel consumption and noise, providing a better navigation comfort.
The Docking function allows reducing the response of the lever for a better docking operation, while the High-Idle function increases the minimum speed of engines. Neutral warm up is possible with the Warm-Up function. The Power E is prearranged for Trolling valve operations.



SINGLE ENGINE, SINGLE CONTROL STATION APPLICATION COMPONENTS:

- 1 Power E Actuator
- 1 single lever control
- Pre-assembled electric cables
- Configuration cable

TWIN ENGINE, DOUBLE CONTROL STATION APPLICATION COMPONENTS:

- 2 Power E Actuators
- 2 twin lever controls
- Pre-assembled electric cables
- Configuration cable

The Power E™ electronic system actuators cannot be installed in those rooms where ignition-proof devices are required.

Power E™ is a versatile system which can be used with all the signals and new data communication standards on the engines equipped with an electronic control unit. It is in compliance with the new Euro 4 engines and can communicate with the common standard CAN SAE J1939 or generate any kind of electric signals, like voltage, current, pwm or frequency for full fit any engine electric interface.
The electronic actuator can control up to 3 shift solenoid valves for gear operation and 1 proportional solenoid valve for the trolling operation.
It is possible to select a RINA behavior, according to RINA directives, through the configuration software.
The data transmission between control stations and actuators take place in a safe digital format. It is also possible a digital communication between actuators and engines.

DIGITAL DATA TRANSMISSION
PLUG'N PLAY CONNECTIONS
RPM AUTOMATIC SYNCHRONIZATION
RPM REDUCTION FOR DOCKING MANEUVERS
UP TO 7 CONTROL STATIONS
SHIFTING DELAYS SELECTED BY THE SOFTWARE
CONFIGURATION THROUGH THE SOFTWARE
INTEGRATED TROLL CONTROL
ELECTRONIC COMMUNICATION WITH THE ENGINE
(SAE J 1939 or NMEA 2000)



CE

Single - 40910 U
Twin - 40911 W



TECHNICAL FEATURES:

- Single lever for control shift and throttle
- Up to 7 control stations
- Power supply: min 6 max 32V
- Working temperatures: -25°C to +75°C
- Control station function:
  - Station Selection
  - Warm Up engines
  - Engine Minimum high (High Idle)
  - Troll
  - Docking
  - Engines synchronization
- Dedicated CAN channel for digital throttle command (CAN SAE J 1939 protocol)
- Throttle outputs (software selectable):
  - PWM (0-100%, frequency from 200Hz to 1 kHz)
  - Frequency (from 200Hz to 1 kHz)
  - Voltage (double output 0..5V and 0..2.5V)
  - Current (4..20mA)
- Shift Output
  - Up to three solenoid valves
- Trolling valve outputs (software selectable):
  - PWM (0-100%, frequency from 200Hz to 1 kHz)
  - Frequency (from 200Hz to 1 kHz)
  - Voltage (0..5V)
  - Current (4..20mA)
- Operating parameter adjustments through configuration software

SAFETY DEVICES:

- Start in-gear (Start inhibition with shifted gear)
- Low clutch oil pressure signal
- Audible and visual diagnostic failure alarm
- Proportional shift delays
- Meets CEI EN 60945 standards

EMC CERTIFICATION AND CE MARK:

It is in conformity with:

- CEI EN60945
- UNI-EN_ISO 11547
- ABYC P-24
- SAE J 1939 v. 2.0 B

ENGINE THROTTLE CONTROL COMPATIBILITY:

- Current (4..20mA): MAN, MTU and etc.
- Voltage: (0..5V and 0..2.5V): Cummins, Detroit Diesel, Scania, Iveco, Lombardini, VM Motori, FNM etc.
- PWM: Caterpillar

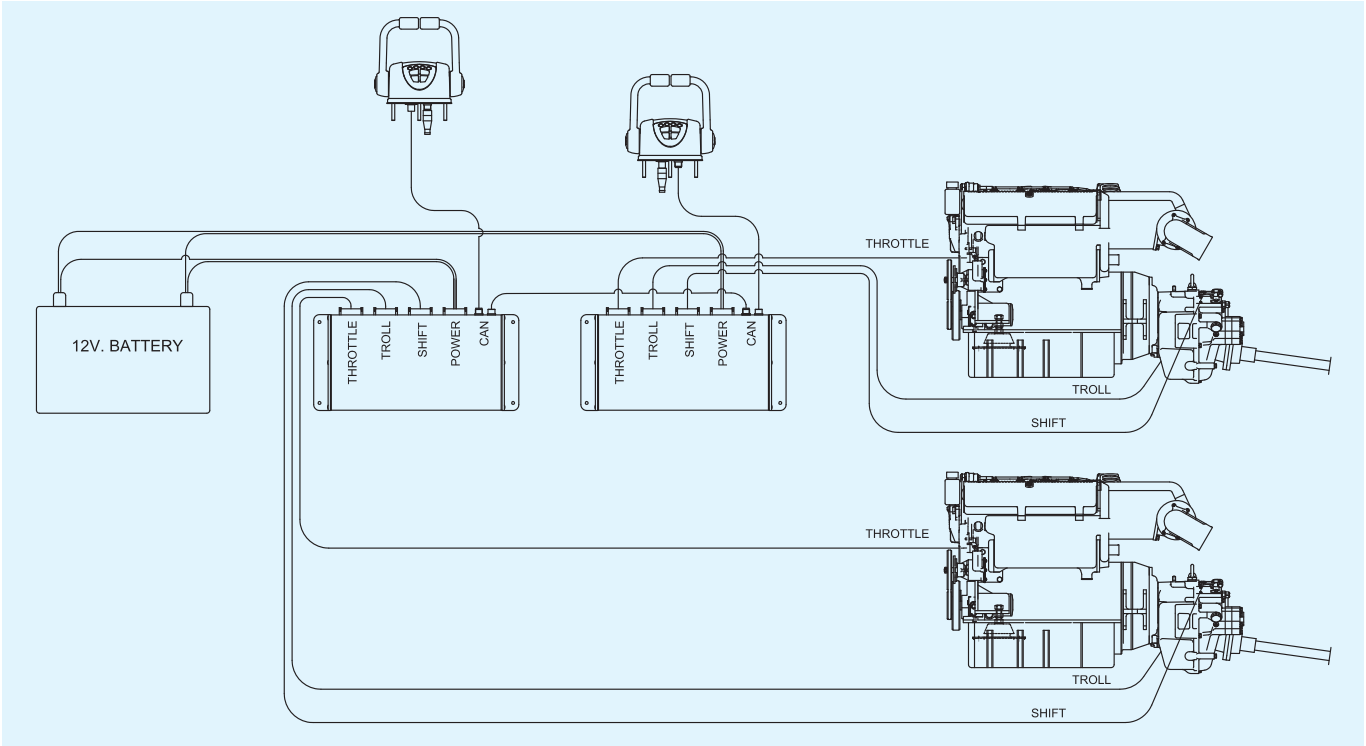



DIAGRAM	SYSTEM	COMPONENTS	PART No.	Qty
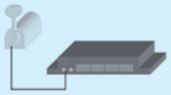	**PwE11** **Single Engine** **Single Station**	Actuator Single control head Configuration cable 7 m CAN cables Power in cables/alarms Throttle cables Shift cables Troll cables	40909 K 40910 U 72279 H Chart E1 Select the desired configuration according to Chart E1	1 1 1 1 1 for each connection
	**PwE12** **Single Engine** **Twin Station**	Actuator Single control head Configuration cable 7 m CAN cables Power in cables/alarms Throttle cables Shift cables Troll cables	40909 K 40910 U 72279 H Chart E1 Select the desired configuration according to Chart E1	1 2 1 2 1 for each connection
	PwE13 **Single Engine** **Triple Station**	Actuator Single control head Configuration cable 7 m CAN cables Power in cables/alarms Throttle cables Shift cables Troll cables	40909 K 40910 U 72279 H Chart E1 Select the desired configuration according to Chart E1	1 3 1 3 1 for each connection
	PwE21 **Twin Engine** **Single Station**	Actuator Twin control head Configuration cable 7 m CAN cables Power in cables/alarms Throttle cables Shift cables Troll cables	40909 K 40911 W 72279 H Chart E1 Select the desired configuration according to Chart E1	2 1 1 2 2 for each connection
	PwE22 **Twin Engine** **Twin Station**	Actuator Twin control head Configuration cable 7 m CAN cables Power in cables/alarms Throttle cables Shift cables Troll cables	40909 K 40911 W 72279 H Chart E1 Select the desired configuration according to Chart E1	2 2 1 3 2 for each connection
	PwE23 **Twin Engine** **Triple Station**	Actuator Twin control head Configuration cable 7 m CAN cables Power in cables/alarms Throttle cables Shift cables Troll cables	40909 K 40911 W 72279 H Chart E1 Select the desired configuration according to Chart E1	2 3 1 4 2 for each connection

Note: The configuration cable is supplied in a single length of 7 m.



CHART E1: Cable types and lengths

CABLE CONNECTION	ACTUATOR CONNECTOR	7 m - 23 ft	10 m - 33 ft	15 m - 50 ft	20 m - 66 ft	25 m - 82 ft
Single battery Power cable	POWER	41210 U	41211 W	41212 Y	-	-
Twin battery Power cable	POWER	41213 A	41214 C	41215 E	-	-
Shift	SHIFT	41216 G	41217 J	41218 L	-	-
Troll: PWM or Frequency output	TROLL	41219 N	41220 X	41221 Z	-	-
Troll: Voltage output	TROLL	41222 B	41223 D	41224 F	-	-
Troll: Current output	TROLL	41225 H	41226 K	41227 M	-	-
Configuration Cable	TROLL	72279 H	-	-	-	-
Throttle: SAE J1939 output (without termination)	THROTTLE	41228 P	41229 S	41230 A	-	-
Throttle: SAE J1939 output (with termination)	THROTTLE	41240 D	41241 F	41242 H	-	-
Throttle: PWM / Frequency output	THROTTLE	41231 C	41232 E	41233 G	-	-
Throttle: Voltage output	THROTTLE	41234 J	41235 L	41236 N	-	-
Throttle: Current output	THROTTLE	41237 R	41238 T	41239 V	-	-
CAN cable	CAN	71030 L* (* 6 m)	71021 K	71031 N	71032 R	71094 P

Notes:
- The configuration cable is supplied in a single lenght of 7 m
- The Troll cable is needed only for boats equipped with the Trolling valve
- For optional output or input please refer to the "Power E - Installation and User Manual"
- Ask our Techical Services for Custom configurations (eg. gear box oil pressure signal)
- To determine the CAN network please refer to the "Power E™ - Installation and User Manual" and/or ask our Technical Service

The **"Power E™ - Installation and User Manual"** describes activities, operations, technical specifications which must be followed during the installation and/or usage of the product, in order to keep a valid warranty and obtain the better performances.
Descriptions and drawings in the manual are apt to allow an easy installation and safe use of the product by skilled persons. In case of doubt and/or for any information, please contact our Technical Service.

PLEASE REFER TO LIMITED WARRANTY CONDITIONS REPORTED IN THIS CATALOGUE.



ELECTRONIC CONTROL SYSTEM

The easy to install Power A provides effortless control of throttle and shift levers using reliable and precise Digital Data Transmission. This dual or single function control system has been specifically designed to interface with electronic, electro-hydraulic and/or traditional mechanical controlled engines.

The ergonomic design of the control levers with optional trim and tilt switches allows for accurate and comfortable boat handling both at sea and while docking. Automatic Engine Synchronization is a standard feature of the Power A, which provides for a more fuel efficient and comfortable ride.

A unique Dock Assist function offers the operator the opportunity to reduce the sensitivity of the throttle and shift levers for an easier dockside handling. A High Idle Control feature allows you to increase the minimum RPM of the engines in case of cold engines or in those applications where adjusting the minimum RPM is necessary.

Warm Up function is standard feature on the Power A.

SERIES UP TO 3 CONTROL STATIONS

SINGLE OR DUAL FUNCTION

DIGITAL DATA TRANSMISSION

AUTOMATIC ENGINE SYNCHRONIZATION

PLUG'N PLAY CONNECTION

DOCK ASSIST

HIGH IDLE CONTROL

AUDIBLE AND VISUAL DIAGNOSTIC ALERT SYSTEM

MINIMAL PROGRAMMING

The Power A is suitable for boats up to 82 feet (25 m) with up to 3 stations. "Plug and Play" wiring harnesses make the installation quick and easy with minimal programming required to set the system to the individual requirements of the application.
Audible and visual diagnostic systems alert the operator to any control system issue needing attention.

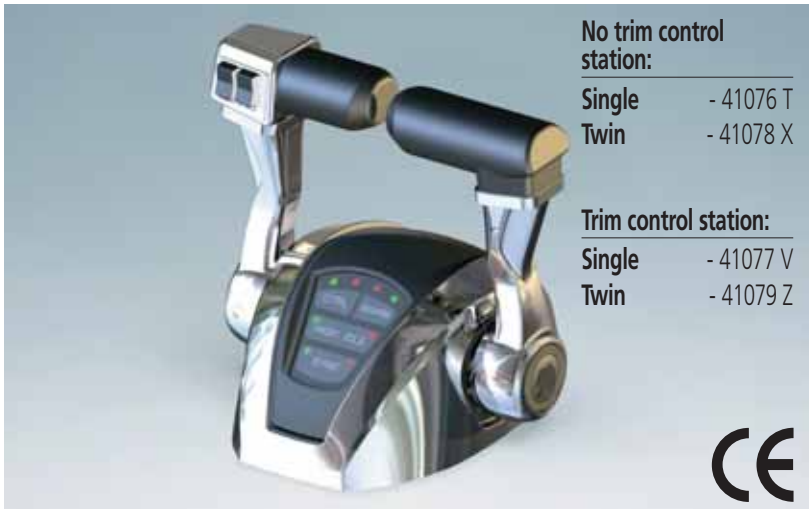

No trim control station:

Single	- 41076 T
Twin	- 41078 X

Trim control station:

Single	- 41077 V
Twin	- 41079 Z



41074 N



41072 J

TECHNICAL FEATURES:

- Single lever for control shift and throttle
- Up to 3 control stations
- Power supply: min 6 max 32V
- Working temperatures: -25°C to +75°C
- Control station function:
  - Station Selection
  - Warm Up engines
  - Engine Minimum high (High Idle)
  - Docking
  - Engines synchronization
  - Trim (optional)
- Throttle outputs (software selectable):
  - Voltage (double output 0-5V and 0-2.5V

ELECTRONIC ACTUATOR:

- Up to three solenoid valves
- Shift customizable pauses

MECHANICAL ACTUATOR: (Shift, Throttle)

- Full stroke 80 mm
- Dip-switch function selection and hardware or software configuration

SAFETY DEVICES:

- Start-in gear protection
- Low clutch oil pressure signal
- Audible and visual diagnostic failure signals
- Proportional shift delays (software selectable)
- Meets CEI EN 60945



ENGINE	SYSTEM	COMPONENTS	PART No.	Qty
Electronic Throttle Mechanical shift	**EM11** Single Engine Single Station	Mechanical actuator Single control with trim (or no trim) Power supply adapter 12V (24V) Power supply extension Throttle cable extension Network extension Network terminator	41072J 41077V (41076T) 41258Z (41259B) Chart A1 Chart A1 Chart A1 41260K	1 1 1 2 1 1 2
	EM12 Single Engine Twin Station	Mechanical actuator Single control with trim (or no trim) Power supply adapter 12V (24V) Power supply extension Throttle cable extension Network extension Network terminator	41072J 41077V (41076T) 41258Z (41259B) Chart A1 Chart A1 Chart A1 41260K	1 2 1 3 1 2 2
	EM21 Twin Engine Single Station	Mechanical actuator Dual control with trim (or no trim) Power supply adapter 12V (24V) Power supply extension Throttle cable extension Network extension Network terminator	41072J 41079Z (41078X) 41258Z (41259B) Chart A1 Chart A1 Chart A1 41260K	2 1 1 3 2 2 2
	EM22 Twin Engine Twin Station	Mechanical actuator Dual control with trim (or no trim) Power supply adapter 12V (24V) Power supply extension Throttle cable extension Network extension Network terminator	41072J 41079Z (41078X) 41258Z (41259B) Chart A1 Chart A1 Chart A1 41260K	2 2 1 4 2 3 2
Electronic Throttle Electronic shift	**EE11** Single Engine Single Station	Electronic actuator Single control with trim (or no trim) Power supply adapter 12V (24V) Power supply extension Throttle cable extension Network extension Network terminator	41074N 41077V (41076T) 41258Z (41259B) Chart A1 Chart A1 Chart A1 41260K	1 1 1 2 1 1 2
	EE12 Single Engine Twin Station	Electronic actuator Single control with trim (or no trim) Power supply adapter 12V (24V) Power supply extension Throttle cable extension Network extension Network terminator	41074N 41077V (41076T) 41258Z (41259B) Chart A1 Chart A1 Chart A1 41260K	1 2 1 3 1 2 2
	EE21 Twin Engine Single Station	Electronic actuator Dual control with trim (or no trim) Power supply adapter 12V (24V) Power supply extension Throttle cable extension Network extension Network terminator	41074N 41079Z (41078X) 41258Z (41259B) Chart A1 Chart A1 Chart A1 41260K	1 1 1 2 2 1 2
	EE22 Twin Engine Twin Station	Electronic actuator Dual control with trim (or no trim) Power supply adapter 12V (24V) Power supply extension Throttle cable extension Network extension Network terminator	41074N 41079Z (41078X) 41258Z (41259B) Chart A1 Chart A1 Chart A1 41260K	1 2 1 3 2 2 2



ENGINE	SYSTEM	COMPONENTS	PART No.	Qty
Mechanical Throttle Mechanical shift	**MM11** Single Engine Single Station	Mechanical actuator Single control with trim (or no trim) Power supply adapter 12V (24V) Power supply extension Network extension Network terminator	41072J 41077V (41076T) 41258Z (41259B) Chart A1 Chart A1 41260K	2 1 1 3 2 2
	MM12 Single Engine Twin Station	Mechanical actuator Single control with trim (or no trim) Power supply adapter 12V (24V) Power supply extension Network extension Network terminator	41072J 41077V (41076T) 41258Z (41259B) Chart A1 Chart A1 41260K	2 2 1 4 3 2
	MM21 Twin Engine Single Station	Mechanical actuator Dual control with trim (or no trim) Power supply adapter 12V (24V) Power supply extension Network extension Network terminator	41072J 41079Z (41078X) 41258Z (41259B) Chart A1 Chart A1 41260K	4 1 2 5 4 2
	MM22 Twin Engine Twin Station	Mechanical actuator Dual control with trim (or no trim) Power supply adapter 12V (24V) Power supply extension Network extension Network terminator	41072J 41079Z (41078X) 41258Z (41259B) Chart A1 Chart A1 41260K	4 2 2 6 5 2
Mechanical Throttle Electronic shift	**ME11** Single Engine Single Station	Mechanical actuator Electronic actuator Single control with trim (or no trim) Power supply adapter 12V (24V) Power supply extension Network extension Network terminator	41072J 41074N 41077V (41076T) 41258Z (41259B) Chart A1 Chart A1 41260K	1 1 1 1 3 2 2
	ME12 Single Engine Twin Station	Mechanical actuator Electronic actuator Single control with trim (or no trim) Power supply adapter 12V (24V) Power supply extension Network extension Network terminator	41072J 41074N 41077V (41076T) 41258Z (41259B) Chart A1 Chart A1 41260K	1 1 2 1 4 3 2
	ME21 Twin Engine Single Station	Mechanical actuator Electronic actuator Dual control with trim (or no trim) Power supply adapter 12V (24V) Power supply extension Network extension Network terminator	41072J 41074N 41079Z (41078X) 41258Z (41259B) Chart A1 Chart A1 41260K	2 1 1 1 4 3 2
	ME22 Twin Engine Twin Station	Mechanical actuator Electronic actuator Dual control with trim (or no trim) Power supply adapter 12V (24V) Power supply extension Network extension Network terminator	41072J 41074N 41079Z (41078X) 41258Z (41259B) Chart A1 Chart A1 41260K	2 1 2 2 5 4 2



CHART A1: Electrical cables - available models and lengths

CABLE MODEL	USE	1 m - 3 ft	7 m - 23 ft	10 m - 33 ft	15 m - 50 ft	20 m - 66 ft
Configuration cable (optional)	Custom software configuration	41257 X	-	-	-	-
Power supply extension cable	Power supply devices	41261 M	41157 T	41262 P	41263 S	41622 U
Throttle extension cable (engines with electronic throttle input)	For Yanmar BY Series	-	72989 S	72990 A	72991 C	-
	For Lombardini	-	41560 Y	41264 U	41265 W	41562 C
	For Mercruiser-Cummins QSD	-	41597 K	41598 A	41599 C	41623 W
	For IVECO	-	41583 L	41584 N	41585 R	-
	For Mercruiser-Diesel DSD 4 and 6 cylinders	-	41586 T	41587 V	41588 X	-
	For Volkswagen TDI-4, TDI-5, TDI-6	-	41894 E	41895 G	41896 J	-
	For other engines	Please refer to our Technical Service to choose the cable suitable to the engine				
Network extension cable	Devices communication	41267 A	41156 R	41268 C	41269 E	41624 Y
Engine RPM extension cable	Engine RPM feedback	-	41158 V	41270 N	41271 R	41626 C

Note:
- The configuration cable has a single length of 1 m (3 ft)
- For optional outputs or inputs please refer to the "Power A™ - Installation and User Manual" or ask for information to our Technical Service
- Please ask our Sales Department for Custom solutions
- To determine the network please refer to the "Power A™ - Installation and User Manual" or ask our Technical Service

Additional components and spare parts

TYPE	SYSTEM	DESCRIPTION	PART No.	Qty
Engine RPM extension cable	Systems with RPM feedback (alternator, dynamo or tachometer)	RPM extension cable	Chart A1	1 for each engine
Cable connection kit	Mechanical actuator	Kit to connect the mechanical cable to the actuator	41898 N	1 for each actuator
Conduit stop kit	Mechanical actuator	Conduit stop kit for mechanical cable	41897 L	1 for each actuator

COMPATIBILITY WITH ALL MECHANICAL THROTTLE ENGINES:

COMPATIBILITY WITH ELECTRONIC THROTTLE ENGINES:

- Cummins, Detroit Diesel, Scania, Iveco, FPT, Lombardini, VM Motori, FNM, Yanmar, Volkswagen, etc.

EMC CERTIFICATION AND CE MARK:

Power A™ is in conformity with:
- CEI EN60945
- UNI-EN_ISO 11547

The Power A™ electronic system actuators cannot be installed in those rooms where ignition-proof devices are required.

The **"Power A™ - Installation and User Manual"** describes activities, operations, technical specifications which must be followed during the installation and/or usage of the product, in order to keep a valid warranty and obtain the better performances. Description and drawings in that manual are suitable to allow an easy installation and safe use of the product by skilled persons. In case of doubt and/or for any information, please contact our Technical Service.

PLEASE REFER TO LIMITED WARRANTY CONDITIONS REPORTED IN THIS CATALOGUE.



ELECTRONIC CONTROL SYSTEM

Power C is a distributed intelligence system featuring 1 microprocessor in each control head for each lever and 2 micro-processors in each actuator to operate the clutch and the throttle of the engine.
The digital data transmission between the control head and the actuator microprocessors utilizes a CAN Bus 4-conductor shielded cable that reduces any possible interference and guarantees the maximum reliability.
The system is designed for single or twin engine vessels up to 35 m (115 ft) utilizing one actuator for each engine and one single lever control for each control station.
The pre-assembled electric cables (Plug'n Play connectors) guarantee fast and easy installation avoiding connection mistakes.
In the event of system failure, the audible and visual diagnostic alarms advise the cause of the problem in a very easy and quick way. The actuators can then be converted to manual operation thanks to a built-in mechanical device.
The standard twin engine synchronization system reduces the vibrations and the noise of the engines for high comfort and higher engine efficiency.
The docking function which comes standard with the system, permits to reduce the maximum RPM of the engine and allows the operator to use the complete movement of the lever during the docking maneuver.



SINGLE ENGINE,
SINGLE CONTROL STATION APPLICATION
COMPONENTS:

- 1 Power C actuator complete with 2 push-pull cable connector kits and 1 kit with 2 termination resistors
- 1 single lever control
- Pre-assembled electric cables (length required according to system configuration)
- 2 Ultraflex C2, or C8, or MACHZero mechanical push-pull cables (length required according to system configuration)
- 1 Automatic Power Selector (optional) P.No. 65198 T

TWIN ENGINE,
SINGLE CONTROL STATION APPLICATION
COMPONENTS:

- 2 Power C actuators complete with 2 push-pull cable connector kits, 2 installation kits and 2 pre-assembled jumpers
- 2 dual lever controls
- Pre-assembled electric cables (length required according to system configuration)
- 4 Ultraflex C2, or C8, or MACHZero mechanical push-pull cables (length required according to system configuration)
- 1 Automatic Power Selector (optional) P.No. 65198 T

The Power C™ electronic system actuators cannot be installed in those rooms where ignition-proof devices are required.

On request a POWER C system version with RINA Type Approval Certificate (No. ELE247004CS) is available.
RINA capproved actuator: Part No. 40802 R
For any further information, please contact our Techical Service

CAN BUS DIGITAL DATA TRANSMISSION

CAN BUS DIGITAL DATA TRANSMISSION
PLUG'N PLAY CONNECTIONS
AUTOMATIC SYNCHRONIZATION FUNCTION
RPM REDUCTION FOR DOCKING MANEUVERS
UP TO 7 CONTROL STATIONS
SAFETY MANUAL MANEUVERING DEVICE
PROPORTIONAL SHIFT DELAYS
ACTUATORS SUITABLE TO CONTROL "TROLLING VALVE" ARE AVAILABLE ON REQUEST
MEETS CEI EN 60945 STANDARDS
CE MARKED

TECHNICAL FEATURES:

- Single lever to control both shift and throttle
- Distributed intelligence system
- Up to 7 control stations
- 12/24 Volts DC power supply
- Fast and easy installation (Plug n'Play)
- Station select and station transfer function (STATION SELECT)
- Neutral throttle warm up (WARM UP)
- High/Low idle engine RPM selection (HIGH IDLE)
- Automatic twin engine RPM synchronization (SYNC)
- Docking function (DOCK)
- Control panel light calibration
- Audible and visual indicators for neutral position
- Mechanical interface to most engine/transmission combinations
- Initial system function settings
- Engine trolling valve control when using the specific actuators (page16) and the "troll"control boxes

SAFETY:

- Start in-gear protection
- Low clutch oil pressure alarm
- Audible and visual diagnostic failure alarm
- Safety manual maneuvering device on the actuator
- Proportional shift delays
- Meets CEI EN 60945 standards



Single - 39974 P
Twin - 39308 Z
Single "troll" - 41160 F
Twin "troll" - 41010 K



Single - 39973 M
Twin - 39607 K
Single "troll" - 41161 H
Twin "troll" - 41163 M



Single - 39972 K
Twin - 39608 M
Single "troll" - 41162 K
Twin "troll" - 41164 P

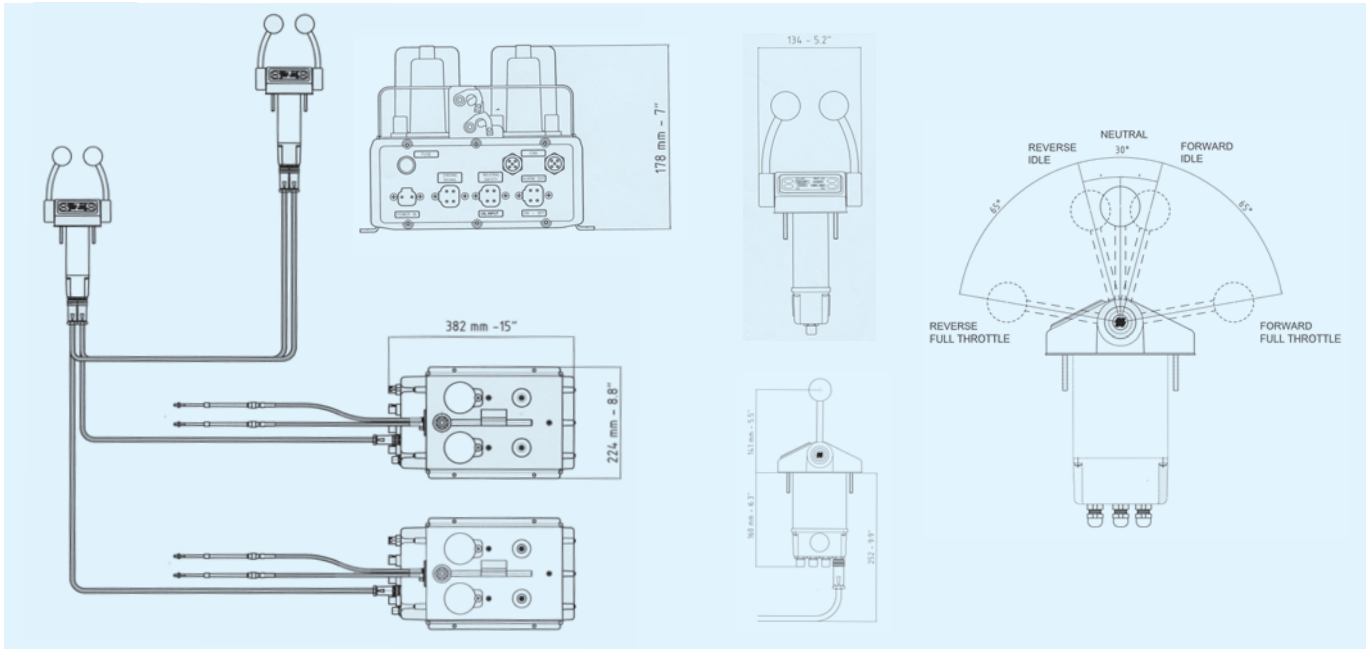



ORDER GUIDE:

DIAGRAM	SYSTEM	COMPONENTS	PART No.	Qty
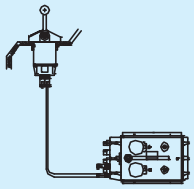	**PwC11** **Single Engine** **Single Station**	Actuator Single Control Head Power In Cable Neutral Safety - Oil Input Cable Alarm Out - On Off CableCAN Bus CAN Bus Cable Installation Kit	39602 Z (page 17) Chart C1 Chart C1 Chart C1 Chart C1 41889M	1 1 1 1 1 1 1
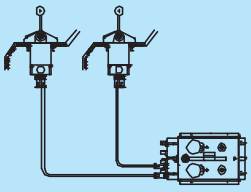	**PwC12** **Single Engine** **Twin Station**	Actuator Single Control Head Power In Cable Neutral Safety - Oil Input Cable Alarm Out - On Off Cable CAN Bus Cable Installation Kit	39602 Z (page 17) Chart C1 Chart C1 Chart C1 Chart C1 41889M	1 2 1 1 1 2 1
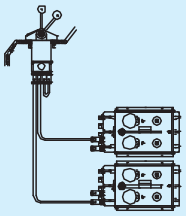	**PwC21** **Twin Engine** **Single Station**	Actuator Twin Control Head Power In Cable Engine Signal Cable (Optional) Neutral Safety - Oil Input Cable Alarm Out - On Off Cable CAN Bus Cable Installation Kit	39602 Z (page 17) Chart C1 Chart C1 Chart C1 Chart C1 Chart C1 41888M	2 1 2 2 2 2 2 1
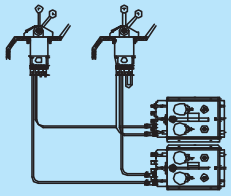	**PwC22** **Twin Engine** **Twin Station**	Actuator Twin Control Station Power In Cable Engine Signal Cable (Optional) Neutral Safety - Oil Input Cable Alarm Out - On Off Cable CAN Bus Cable Installation Kit	39602 Z (page 17) Chart C1 Chart C1 Chart C1 Chart C1 Chart C1 41888M	2 2 2 2 2 2 4 1

WARNING: For the applications with engines featuring **"TROLLING VALVE"** use the Actuator P.No. 41009 B instead of the standard actuator P. No. 39602 Z and add 1 "troll" Actuator P.No. 40663 D for both single engine and dual engine systems. Order "troll" type controls.

CHART C1: Available electric cables:

LENGTH	POWER IN	ENGINE SIGNAL	NEUTRAL SAFETY/OIL INPUT	ALARM OUT/ON OFF	CAN
6 m - 20 ft	71016 T	71019 Z	71017 V	71018 X	71030 L
10 m - 33 ft	71026 W	71029 C	71027 Y	71028 A	71021 K
15 m - 50 ft	71033 T	71036 Z	71034 V	71035 X	71031 N
20 m - 66 ft					71032 R
25 m - 82 ft					71094 P

NOTE: For applications with cables whose length in not listed above, please contact our Technical Service.

The "Power C™ - User and Installation Manual" describes activities, operations, technical specifications which must be followed during the installation and/or usage of the product, in order to keep a valid warranty. Descriptions and drawings in that manual are suitable to allow installation and use of the product to skilled persons. In case of doubt and/or for any information, please contact our Technical Service.

PLEASE REFER TO LIMITED WARRANTY CONDITIONS REPORTED IN THIS CATALOGUE.





SUGGESTIONS AND WARNINGS WHEN SELECTING A MECHANICAL STEERING SYSTEM

Selection of the appropriate mechanical steering system is an important factor for the safety and functionality of your boat.
The combination of engine power, hull type and boat speed influence the correct selection of the steering system.
The load on the steering system increases with the boat speed and engine power; the torque generated by the propeller rotation in high power outboard applications can make it hard to steer.

Big boats with displacement hulls and inboard or non power assisted stern drive engines, can generate high rudder loads: in these cases a mechanical steering system will be inadequate and we suggest the use of an Ultraflex hydraulic steering system.

We always recommend consulting qualified personnel when selecting, installing and maintaining a steering system for your boat.

ADVANTAGES OF A PLANETARY GEAR DESIGN

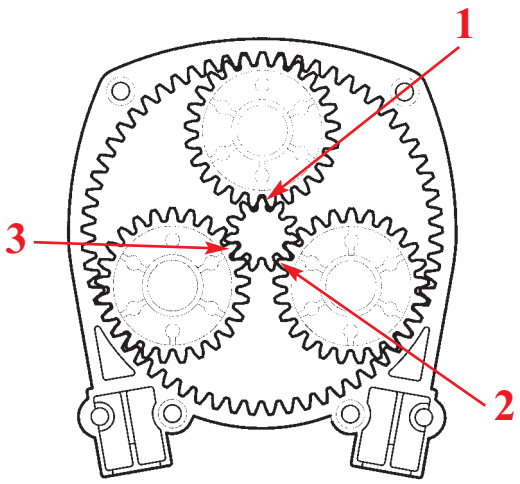

Ultraflex mechanical steering helms T71FC, T73NRFC as well as dual cable versions and tilt wheel versions use a Planetary Gear Design. A Planetary Gear Design has three satellite gears that rotate on their axis and at the same time rotate around the central helm axis. This allows for equal distribution of engine torque over three points of the central gear, dividing and balancing the system loads. The benefits of this special design are increased system longevity, increased efficiency and less engine feedback compared to single pinion gear helms.

EFFICIENCY COMPARISON TESTS

Test configuration:
3 bends at 90°; 1000N load

NOTE: indicated figures have been obtained after 500 cycles of running from samples bought from after-market sources

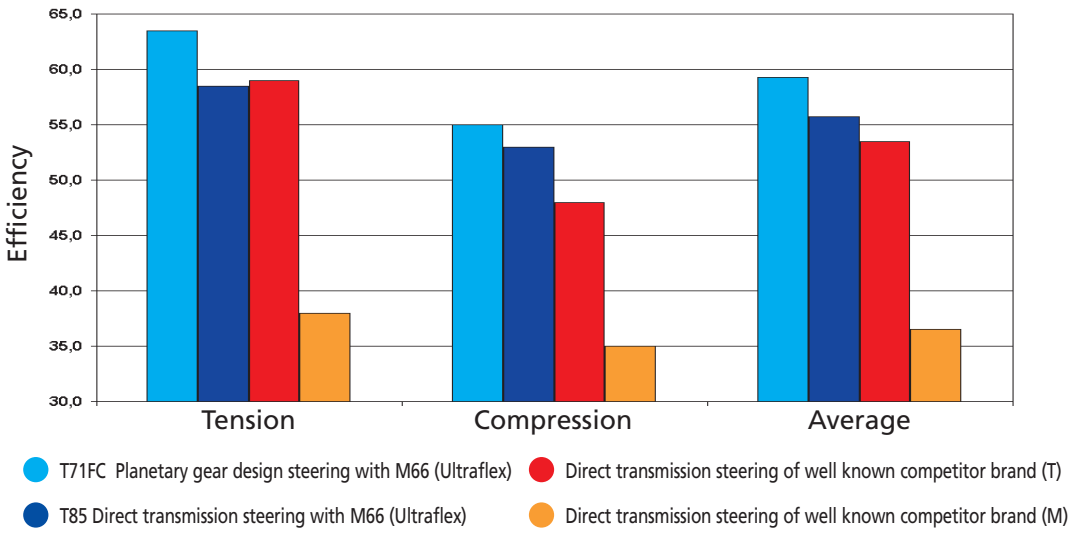



THE IMPORTANCE OF A NON-REVERSIBLE STEERING SYSTEM FOR INCREASED SAFETY

The steering system of a boat is the mechanism that determines the boat direction when the steering wheel is turned.
If, for any circumstance, the driver does not hold the steering wheel, a dangerous situation may occur caused by a sudden change of direction of the boat due to external forces (waves, currents, etc.) or internal forces such as rudder torque originated by the way of rotation of the propeller.
Engine torque usually generates a load on the steering system that must be continually compensated for by the driver even when the boat is going straight. The additional effort by the driver to maintain a true course can often cause fatigue.

With **Ultraflex Non-Reversible** steering helms T73NRFC, T74NRFC, T83NRFC, T84NRFC the loads applied to the steering system are no longer a problem.
A special patented device allows the helm shaft to lock until turned by the driver, maintaining the boat direction and neutralizing the feedback loads on the steering cable.
This mechanism is engaged when the driver is not turning the wheel and is automatically disengaged as soon as the driver applies pressure on the wheel to change direction of the boat.
The **Ultraflex Non-Reversible** mechanism makes driving a boat safer and easier.

USE AND MAINTENANCE

The steering cable must be installed avoiding excessive and/or tight bends. This will provide the driver with easy handling at all speed, helping to reduce inefficiency and excess play in the system.

Marine corrosion may cause the materials to deteriorate affecting maneuvering efficiency and in the worst case, system failure. By following the engine manufacturer specifications, the steering cable end fittings and the engine cable support must be cleaned and greased periodically; these simple operations minimize wear and corrosion in the system.

The steering cable must be regularly inspected. If steering becomes hard, inconsistent, cuts on the conduit surface are noticed, or any other component found damaged, the cable must be replaced immediately.

When storing your boat for an extended period of time we recommend removing the steering cable end fitting from its engine side support and cleaning it adequately.



SELECTION OF STEERING SYSTEM AND CABLE LENGTH MEASUREMENT

APPLICATION	ENGINE POWER	STEERING SYSTEM	
OUTBOARD 	up to 40 kW (55cv)	TM48 - T67	Twin cable systems are recommended for boats that exceed 50 mph. Always follow engine manufacturer's instructions.
	BOAT LENGTH		
	up to 30' (9m)	T85 - T71FC - T81FC - T73NRFC - T83NRFC - T86 - T88NR - T96 - T98NR	
		Twin cable rotary steering systems	
INBOARD 	up to 35' (10.5m)	T71FC - T81FC - T73NRFC - T83NRFC - T86 - T88NR - T96 - T98NR	
		Twin cable rotary steering systems	
STERNDRIVE POWER ASSISTED 		T85 - T71FC - T81FC - T73NRFC - T83NRFC - T86 - T88NR - T96 - T98NR	
		Twin cable rotary steering systems	

NOTE: sterndrive engines not equipped with power steering can create very high steering loads. Our hydraulic steering systems are recommended for these type of boats. For any further information please contact our Technical Service Department.

- Speed, hull, horsepower, engine type, displacement and size are major factors in boat performance and handling characteristics. The above selection guide should be used as a general reference only.
- One of the major factors in selecting a steering system is proper cable length. Due to specific routing in each boat, these approximate lengths will vary. Final selection should be made with the assistance of a qualified technician.
- Ultraflex mechanical steering systems should not be used on boats equipped with engines that exceed the maximum horsepower rating of the boat.

HOW TO MEASURE FOR NEW STEERING CABLE INSTALLATION

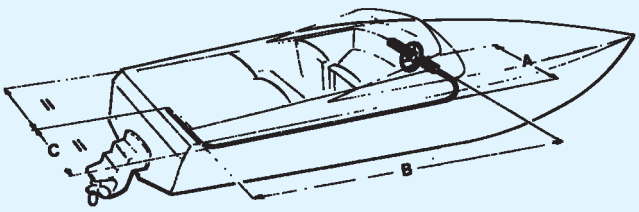

Add. A + B + C and subtract 10 cm (4") for each 90° bend in the cable. For installation through the engine tilt tube, add 30,5 cm (1 ft) to the measure calculated above.
To order in foot length, divide by 30,5 and round off to next whole foot.

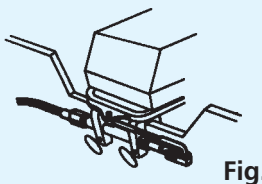

Fig. 1

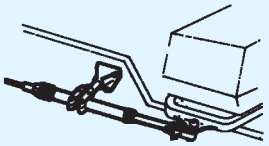

Fig. 2

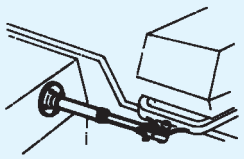

Fig. 3

TILT TUBE MOUNTING - Fig. 1
Example (dimensions in cm):
A (50) + B (250) + C (80) = 380 - 20 for two 90° bends = 360 + 30,5
For a thru-tube installation
390,5 cm : 30,5 = 12,8 ft;
round off to 13 ft

TRANSOM SUPPORT OR SPLASHWELL MOUNTING - Fig. 2-3
Example (dimensions in cm):
A (50) + B (250) + C (80) = 380 - 20 for two 90° bends = 360:
30,5 = 11,8 ft; round off to 12 ft



REPLACEMENT STEERING CABLES

*) **NOTE:** With C230/C231 Morse® and Compac - T® Teleflex® steering helms a K55 - 37816 I adaptor is required if using M58 Ultraflex steering cable manufactured prior to January 1995.

ULTRAFLEX REPLACEMENT CABLE	STEERING HELM	ADAPTOR REQUIRED
M55 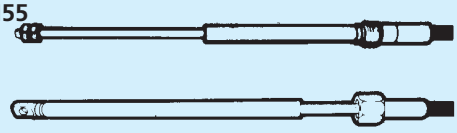	Ultraflex P14 - P15	none
M58 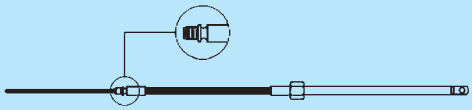	T67 Ultraflex C230/C231 Morse® Compac - T® Teleflex® 805 TX®	none*
M66 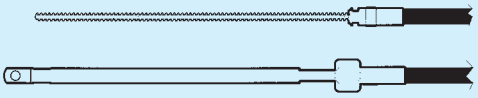	T85 - T71FC - T72FC - T73NRFC - T74NRFC - T81FC - T83NRFC - Ultraflex Safe - TQC® - NFB Safe - TII® - NFB 4.2® Teleflex® - D290 Morse®	none
	T71 - T72 - T73NR - T74NR - T81 - T83NR Ultraflex (discontinued)	**K66** - 38432Q 
M47 -DISCONTINUED USE M66+K66 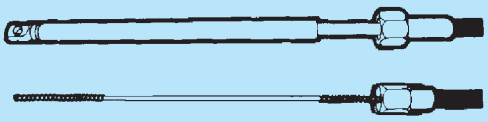	T71 - T72 - T73NR - T74NR - T81- T83NR Ultraflex (discontinued)	none
	T85 - T71FC - T72FC - T73NRFC - T74NRFC - T81FC - T83NRFC Ultraflex	**K46**-35679L 
	Safe - T® - Big-T® - Teleflex®	none
	806 TX®	**K54**-37811D 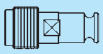
TM86 	G86 - G88NR - G96 - G98NR Ultraflex Command 200 Morse® "The rack" SSC-124 Teleflex®	none
	NOTE: will NOT work with dual cable helms	

HOW TO MEASURE FOR REPLACEMENT STEERING CABLES

D = Misura della guaina

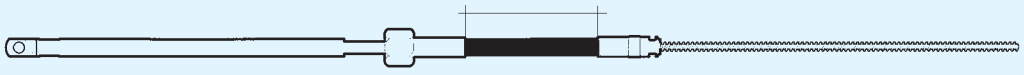

ORDER LENGTH: "D" dimension + 56 cm
To order in foot length, divide for 30,5 and round up to the next whole foot

Example: D= 305 cm + 56 cm= 361 : 30,5 = 11'8". Round up to 12 ft



TM48 STEERING SYSTEM



A COMPLETE STEERING SYSTEM CONSISTS OF:

- Preassembled helm with steering cable: **TM 48** available in 1 foot increments
- Shaft assembly:
  G16 - 31880 O - Black bezel
  G16W - 31881 P - White bezel
- Optional steering wheel (see index)
- Engine connection kits (see index)

FEATURES AND TECHNICAL SPECIFICATIONS:

- All stainless steel output end of cable as per ABYC P17 standards
- Reinforced nylon fiberglass housing
- Two optional installation positions for G16 shaft assembly
- Lock-to-lock steering wheel turns: approx. 2
- Stroke: 222 mm (8.7")
- Maximum allowable steering wheel diameter: 380 mm (15")
- Minimum steering cable bend radius: 200 mm (7.9")

- Exceeds EN 29775 safety standards

- APPLICATIONS: for use with outboard engines up to 40 kW (55 hp)

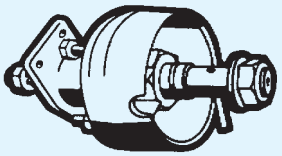

G16

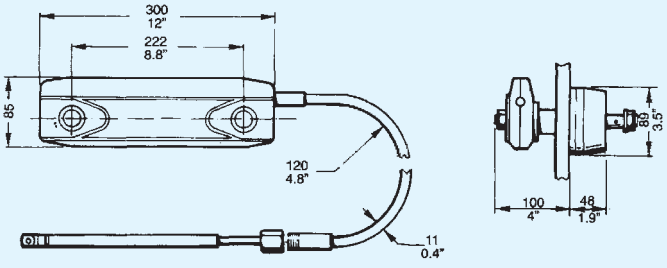

T67 STEERING SYSTEM





A COMPLETE STEERING SYSTEM CONSISTS OF:

- Steering helm with friction:
  T67 - 35809 J - Black bezel
  T67W - 37925 M - White bezel
- Steering cable:
  M58 available in one foot increments
- Optional steering wheel (see index)
- Engine connection kits (see index)

FEATURES AND TECHNICAL SPECIFICATIONS:

- All stainless steel output end of cable as per ABYC P17 safety standards
- Corrosion resistant materials
- Standard friction externally adjustable
- 90° bezel
- Four optional helm positions to facilitate steering cable installation
- Lock-to-lock steering wheel turns: approx. 2,5
- Stroke: 230 mm (9”)
- Maximum allowable steering wheel diameter: 380 mm (15”)
- Minimum steering cable bend radius: 200 mm (7,9”)
- Available in package with ROTECH-IV

- Exceeds EN 29775 safety standards

- APPLICATIONS: for use with outboard engines up to 40 kW (55 hp) with the exception of EVINRUDE E-TEC™ 50 for which the use of T85 or T71FC is recommended.



T67



T67W

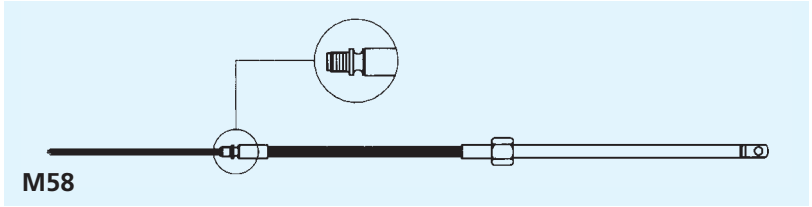

M58

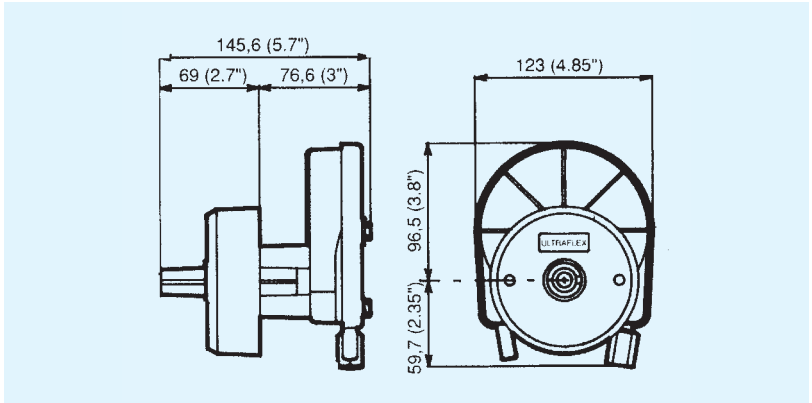



T85 ROTARY STEERING SYSTEM



A COMPLETE STEERING SYSTEM CONSISTS OF:

- Steering helm:
  T85 - 38439 Z - Black bezel
  T85W - 39213 M - White bezel
- Steering cable: **M66**
- Optional steering wheel (see index)
- Engine connection kits (see index)

FEATURES AND TECHNICAL SPECIFICATIONS:

- All stainless steel cable output ends
- Corrosion resistant materials
- Particularly suitable where clearance is limited
- Lock-to lock steering wheel turns: approx. 3
- Stroke 228 mm (9”)
- Maximum allowable steering wheel diameter: 406 mm (16”)
- Minimum steering cable bend radius: 200 mm (7.9”)
- Minimal feedback
- Compact for mounting
- T85 steering system is not to be used on boats equipped with engines that exceed the maximum horsepower rating of the boat
- Available in package with ROTECH-V

- Exceeds EN 28848 safety standards
- Exceeds ABYC P17 safety standards



T85



T85W

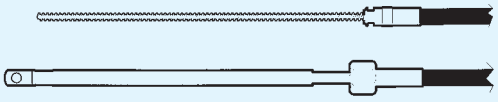

M66

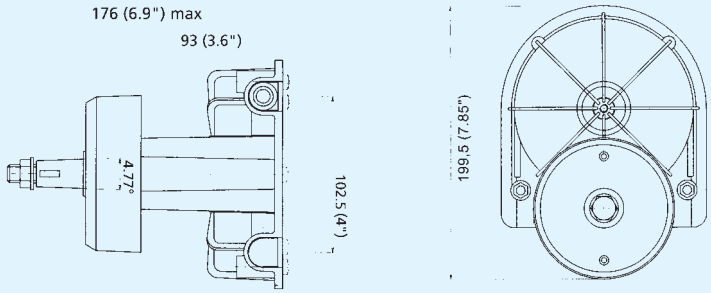

T85

T71FC AND T72FC ROTARY STEERING SYSTEMS

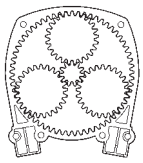

FEATURING PLANETARY GEAR DESIGN

A COMPLETE STEERING SYSTEM CONSISTS OF:

- Steering helm:
  T71FC - 38867 H - single cable steering helm
  T72FC - 38868 K - dual cable steering helm
- Mounting bezel:
  X34 - 36654 B - black, 90° mounting
  X34W - 40654 C - white, 90° mounting
  X35 - 36655 C - black, 20° mounting
- Steering cable: **M66**
  NOTE: two M66 are needed with the T72FC system
- Optional steering wheel (see index)
- Engine connection kits (see index)

FEATURES AND TECHNICAL SPECIFICATIONS:

- Fast connect, simple installation
- All stainless steel cable output ends
- Corrosion resistant materials
- Particulary suitable where clearance is limited
- Optional 90° or 20° installation
- Standard 3/4" tapered shaft
- Lock-to-lock steering wheel turns: approx. 3,8
- Stroke: 228 mm (9")
- Maximum allowable steering wheel diameter: 406 mm (16")
- Minimum steering cable bend radius: 200 mm (7.9")
- Minimal feedback
- Compact for mounting
- T71FC and T72FC steering systems are not to be used on boats equipped with engines that exceed the maximum horsepower rating of the boat
- For boats faster than 50 mph the twin cable steering system T72FC is recommended
- T71FC steering system is also available in package ROTECH-I

- Exceeds EN 28848 safety standards
- Exceeds ABYC P17 safety standards

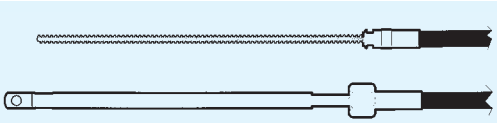

M66





T71FC



T72FC





T71FC - T72FC

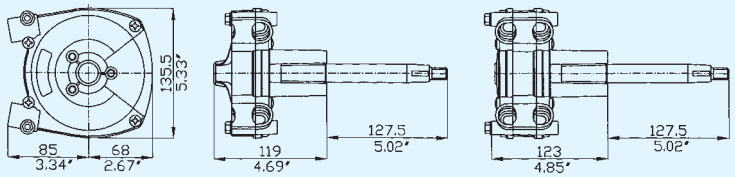





T73NRFC® AND T74NRFC® NON-REVERSIBLE STEERING SYSTEMS

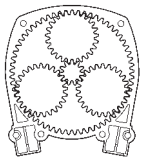

FEATURING PLANETARY GEAR DESIGN

A COMPLETE STEERING SYSTEM CONSISTS OF:

- Steering helm:
  T73NRFC - 38869 M
  single cable steering helm
  T74NRFC - 38870 W
  dual cable steering helm
- Mounting bezel:
  X34 - 36654 B - black, 90° mounting
  X34W - 40654 C - white, 90° mounting
  X35 - 36655 C - black, 20° mounting
- Steering cable: **M66**
  NOTE: two M66 are needed with the T74NRFC system
- Optional steering wheel (see index)
- Engine connection kits (see index)

FEATURES AND TECHNICAL SPECIFICATIONS:

- Easy and safe steering : a **patented non-reversible mechanism** eliminates the continuous load on the operator caused by the propeller torque
- Fast connect, simple installation
- Compact rotary helm unit: the central location of the steering shaft makes these systems the most compact in their class
- Most suitable where clearance is limited
- Ideal for larger outboards and surfacing propellers
- Optional 90° or 20° installation
- Standard 3/4" tapered shaft
- All stainless steel cable output ends
- Made exclusively in corrosion resistant materials
- Lock-to-lock steering wheel turns: approx 3,8
- Stroke: 228 mm (9")
- Maximum allowable steering wheel diameter: 406 mm (16")
- Minimum steering cable bend radius: 200 mm (7.9")
- T73NRFC and T74NRFC steering systems are not to be used on boats equipped with engines that exceed the maximum horsepower rating of the boat
- For boats faster than 50 mph the twin cable steering system T74NRFC is recommended
- Available in package with ROTECH-III

- Exceeds EN 28848 safety standards
- Exceeds ABYC P17 safety standards





T73NRFC



T74NRFC





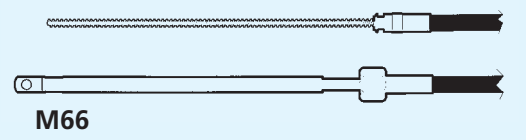

M66

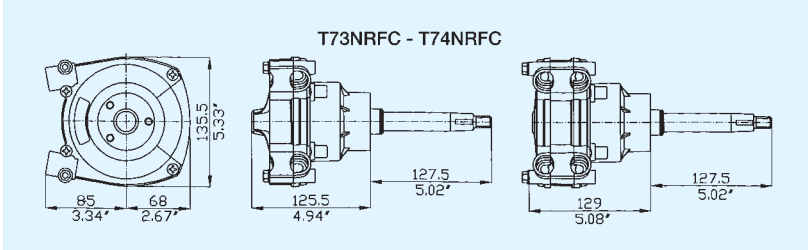

T81FC - T83NRFC®
TILT STEERING SYSTEMS

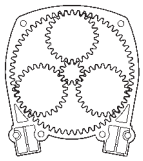

FEATURING PLANETARY GEAR DESIGN

A COMPLETE STEERING SYSTEM CONSISTS OF:

- Steering helm:
  T81FC - 38957 J
  single cable steering helm
  T83NRFC - 38959 N
  non-reversible single cable steering helm
- Tilt mechanism:
  X52 - 39250 U
  NOTE: X52 tilt mechanism fits Ultraflex tilt mount rotary and rack and pinion steering helms as well as Ultraflex tilt mount hydraulic pumps except SilverSteer™ steering systems
- Steering cable: **M66**
- Optional steering wheel (see index)
- Engine connection kits (see index)

FEATURES AND TECHNICAL SPECIFICATIONS:

- Tilt range of 48° and five locking positions
- Fast connect, simple installation
- Tilt device eliminates underdash movement
- Standard 3/4" tapered shaft - stainless steel
- All stainless steel cable output ends
- Corrosion resistant materials
- Lock-to-lock steering wheel turns: approx. 3,8
- Stroke: 228 mm (9")
- Maximum allowable steering wheel diameter: 406 mm (16")
- Minimum steering cable bend radius: 200 mm (7.9")
- T81FC and T83NRFC steering systems are not to be used on boats equipped with engines that exceed the maximum horsepower rating of the boat
- For boats faster than 50 hydraulic steering systems are recommended

- Exceeds EN 28848 safety standards
- Exceeds ABYC P17 safety standards





T81FC with X52



X52

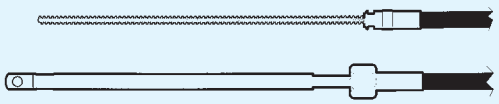

M66

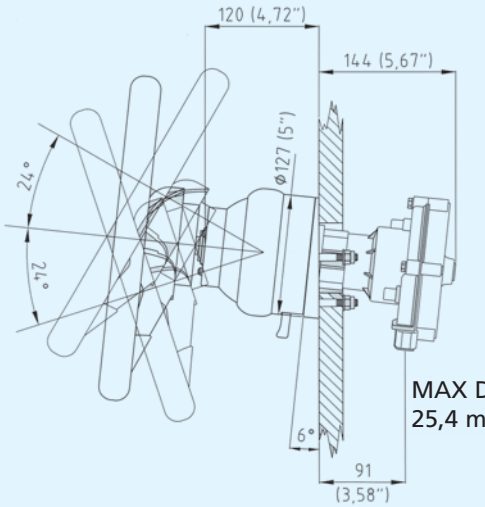

MAX DASH DEPTH
25,4 mm (1")





T86 AND T88NR®
RACK AND PINION STEERING SYSTEMS

A COMPLETE STEERING SYSTEM CONSISTS OF:

- Preassembled helm with steering cable: **TM86**
- Helm assembly:
  G86 - 39418 G standard
  G88NR® - 39419 J - non reversible
- Mounting bezel:
  X34 - 36654 B - black, 90° mounting
  X34W - 40654 C - white, 90° mounting
  X35 - 36655 C - black, 20° mounting
- Optional steering wheel (see index)
- Engine connection kits (see index)

FEATURES AND TECHNICAL SPECIFICATIONS:

- Easy and safe steering: patented non reversible G88NR helm eliminates the continuous load on the operator caused by the propeller torque
- All stainless steel cable output ends
- Made exclusively in corrosion resistant materials
- Optional 90° or 20° installation
- Standard 3/4"tapered shaft
- Lock-to-lock steering wheel turns: 3,5
- Stroke: 210 mm (8.2")
- Maximum allowable steering wheel diameter: 420 mm (16.5")
- Minimum steering cable bend radius: 200 mm (7,9")
- T86 and T88 NR steering systems are not to be used on boats equipped with engines that exceed the maximum horsepower rating of the boat

- Exceeds EN 28848 safety standards
- Exceeds ABYC P17 safety standards





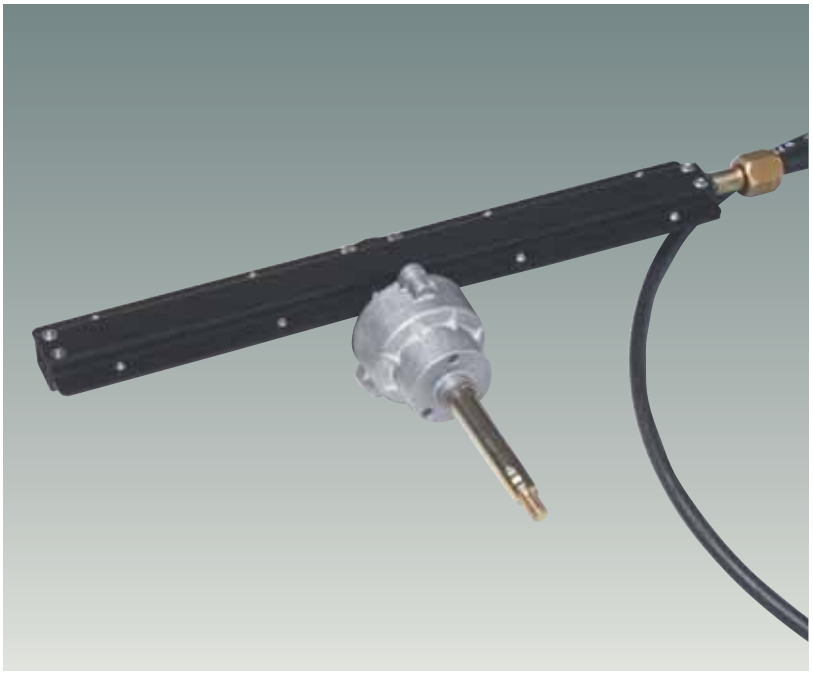

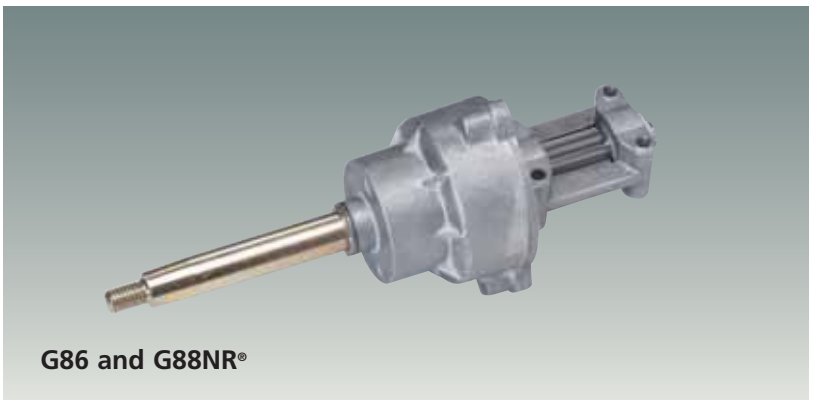

G86 and G88NR®

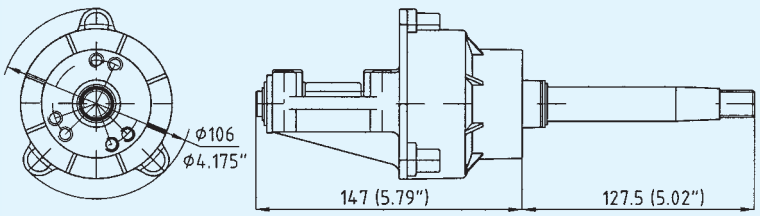

G86 and G88NR®

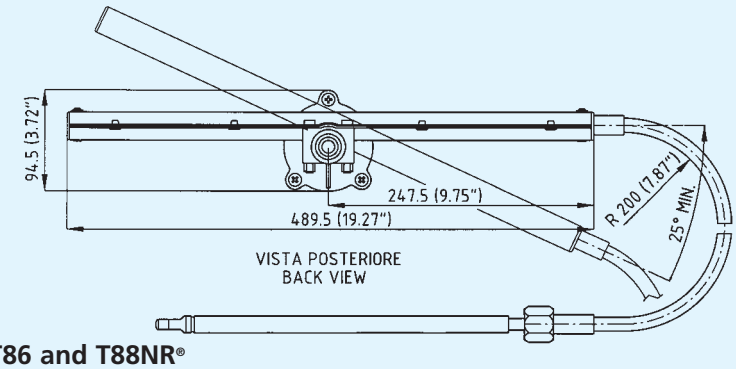

T86 and T88NR®

T96 AND T98NR®
RACK AND PINION TILT STEERING SYSTEMS



A COMPLETE STEERING SYSTEM CONSISTS OF:

- Preassembled helm with steering cable: **TM86**
- Helm assembly:
  G96 - 39650 L standard
  G98NR® - 39649 C non reversible
- Tilt mechanism:
  X52 - 39250 U
  NOTE: X52 tilt mechanism fits Ultraflex tilt mount rotary and rack and pinion steering helms as well as Ultraflex tilt mount hydraulic pumps except SilverSteer™ steering systems
- Optional steering wheel (see index)
- Engine connection kits (see index)

FEATURES AND TECHNICAL SPECIFICATIONS:

- Easy and safe steering: the patented non reverible G98NR helm eliminates the continuous load on the operator caused by the propeller torque
- Fast, simple installation
- Tilt range of 48° and five locking positions
- Tilt device eliminates underdash movement
- Standard 3/4" tapered shaft - stainless steel
- All stainless steel cable output ends
- Made exclusively in corrosion resistant materials
- Lock-to-lock steering wheel turns: 3,5
- Stroke: 210 mm (8.2")
- Maximum allowable steering wheel diameter: 420 mm (16.5")
- Minimum steering cable bend radius: 200 mm (7.9")
- T96 and T98NR® steering systems are not to be used on boats equipped with engines that exceed the maximum horsepower rating of the boat

- Exceeds EN 28848 safety standards
- Exceeds ABYC P17 safety standards



T96 and T98NR®



X52

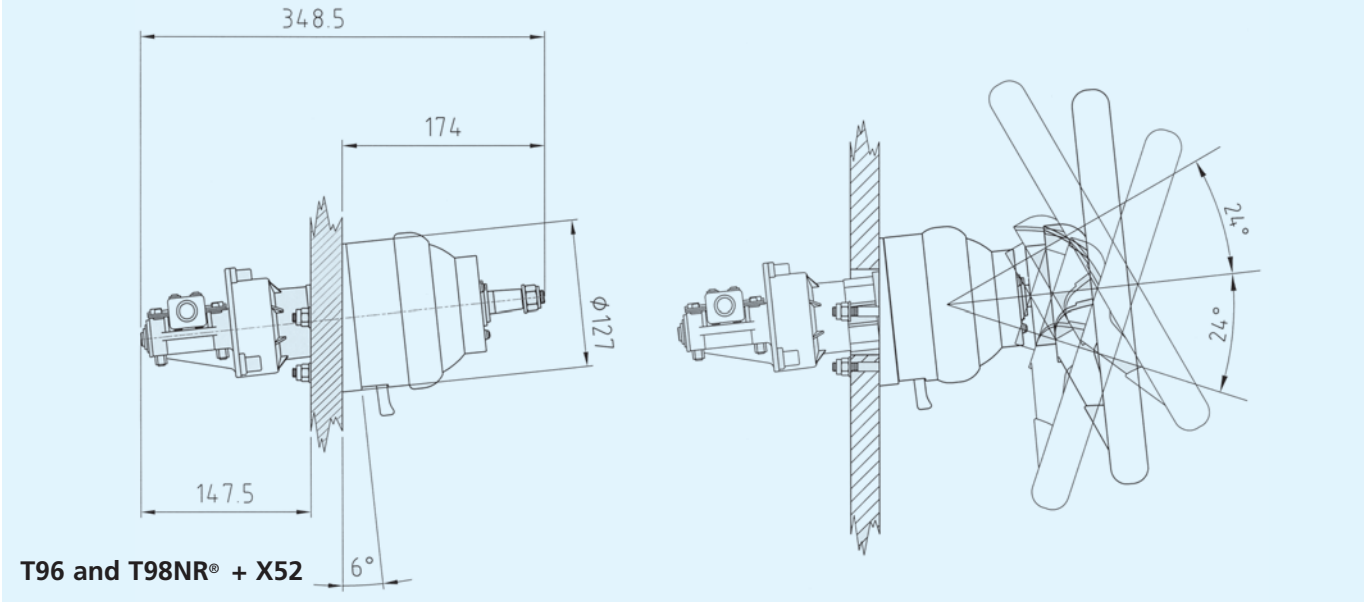

T96 and T98NR® + X52



P14 - P15
STEERING SYSTEMS
FOR INFLATABLE BOATS

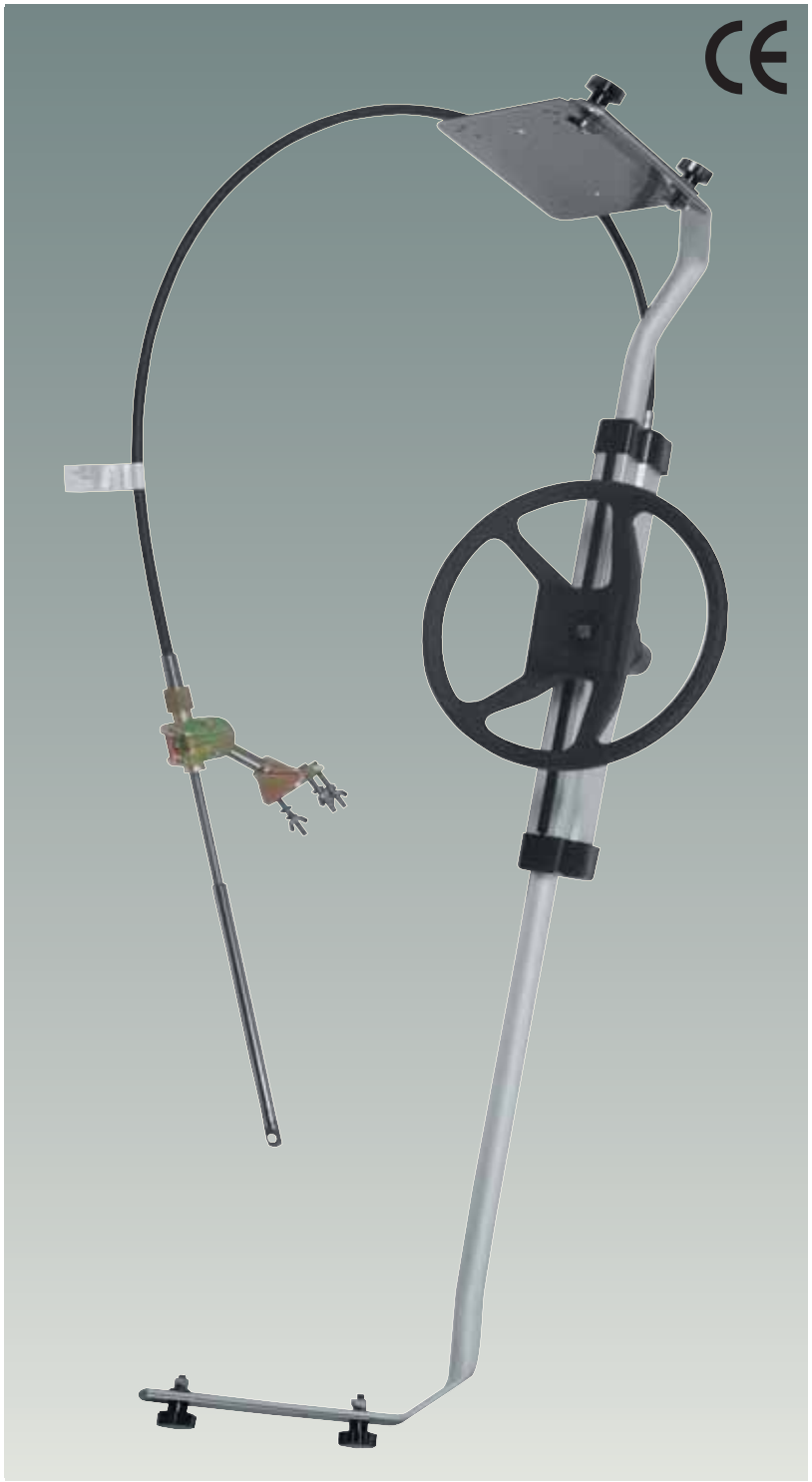

A COMPLETE STEERING SYSTEM CONSISTS OF:

- Rack and pinion system with telescopic support tubes:
  P14 - 33391 Y - lacing cuff anchors
  P15 - 33392 Z - lacing cuff anchors
- Steering cable:
  M55 available in one foot increments
- Optional steering wheel (see index)
- Accessories: control box mounting plates and connection kits (see index)

FEATURES AND TECHNICAL SPECIFICATIONS:

- Anodized alloy telescopic support
- All stainless steel cable output ends
- Lock-to-lock steering wheel turns: approx. 2,5
- Stroke: 230mm (9")
- Maximum allowable steering wheel diameter: 380 mm (15")
- Minimum steering cable bend radius: 200 mm (7.9")

- Exceeds EN 28848 safety standards
- Exceeds ABYC P17 safety standards

- APPLICATION: for use with inflatable boats equipped with outboard engines

CONTROL BOX SUPPORT BRACKETS FOR P14 - P15 STEERING SYSTEMS

S45 - 32797 P
Designed for B47 and B49 control boxes

S56 - 35062 F
Designed for single lever control boxes.
To be positioned on the lacing cuff.

P14 - P15

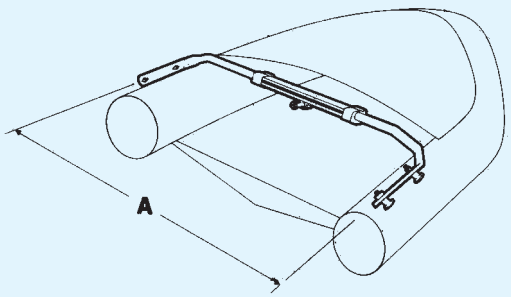

P14 A = min. 1120 mm / max 1470 mm (45,7" - 57,8")
P15 A = min. 1470 mm / max 1820 mm (57,8" - 71,6")

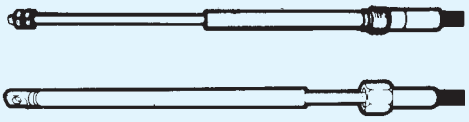

M55

P26 STEERING SYSTEM FOR INFLATABLE BOATS





A COMPLETE STEERING SYSTEM CONSISTS OF:

- Stainless steel, tubular, floor mounted pedestal:
  P26 - 36141 E
- Steering helm with friction:
  T67 - 35809 J - black bezel
  T67W - 37925 M - white bezel
- Steering cable:
  M58 available in one foot increments
- Optional steering wheel (see index)
- Accessories: control box mounting plates and connection kits (see index)

FEATURES AND TECHNICAL SPECIFICATIONS:

- Inflatable boats floor anchors
- Stainless steel tubular support with anodized aluminum control box mounting plate
- All stainless steel cable output ends as per ABYC P17 standards
- Lock-to-lock steering wheel turns: approx. 2,5
- Stroke: 230 mm (9”)
- Maximum allowable steering wheel diameter: 380 mm (15”)
- Minimum steering cable bend radius: 200 mm (7.9”)

- Exceeds EN 28848 safety standards

- APPLICATION: for use with inflatable boats equipped with outboard engines up to 40 kW (55 hp)

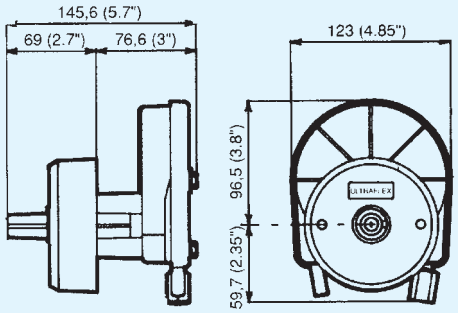

T67

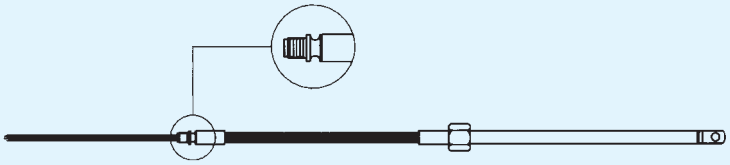

M58

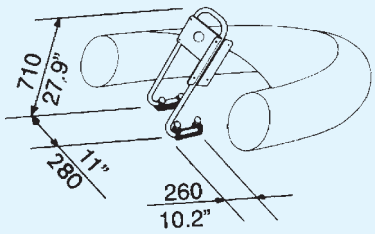



ACCESSORIES FOR STEERING SYSTEMS

STEERING CABLE SUPPORTS

S39 - 31916 F
Clamp block in marine aluminum and stainless steel

S40 - 31917 G
Splashwell mounting, corrosion resistant

S55 - 34744 A
90° rudder support, corrosion resistant

S61 - 36191 S
Clamp block, corrosion resistant painted steel

S62 - 38830 H
Same design as S61, smaller dimensions

S39T - 53930 J - Tube only for S39

S40T - 53935 O - Tube only for S40


S39

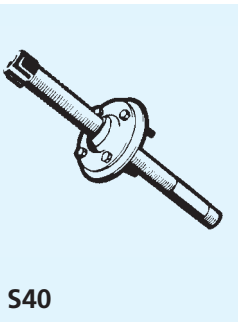
S40

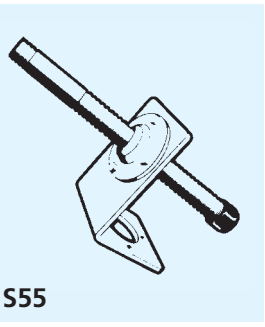
S55

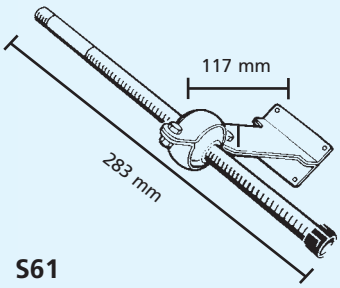

S61

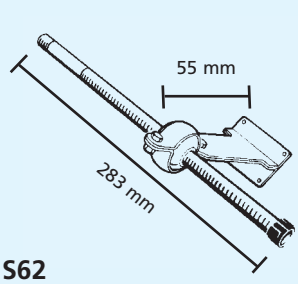

S62

Steering cable supports with stainless stell tube also available:

S39SS - 41551 X
S40SS - 41552 Z
S55SS - 41553 B
S61SS - 41554 D
S62SS - 41555 F
S39TSS - 72971 W
S40TSS - 72972 Y

ENGINE CONNECTION KITS

A50 - 31473 Q
Connection kit for Yamaha® engines

A73SS - 41255 T
Stainless steel tiller arm for some Mercury® engines

A74SS - 41256 V
Stainless steel tiller arm for some Johnson®, Evinrude®, OMC® engines

A75 - 34459 X Clevis

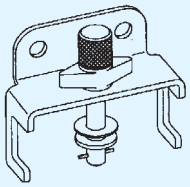
A50

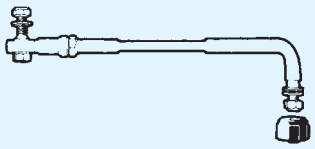
A73SS/A74SS - INOX

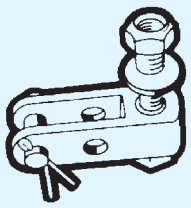
A75

WARNING: A73 and A74 tiller arms are recommended for mechanical steering systems only

ACCESSORIES SELECTION GUIDE

INSTALLATION	CABLE SUPPORT + ENGINE CONNECTION KIT	INSTALLATION	CABLE SUPPORT + ENGINE CONNECTION KIT
A	S39 or S61 or S62 + A75	C	A73 or A74
B	S40 + A75	D	S55 + A75

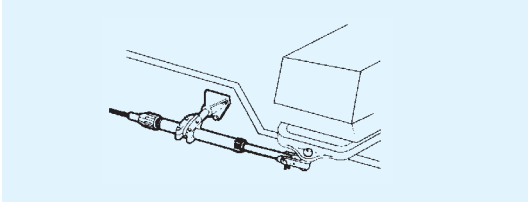
A = With clamp block

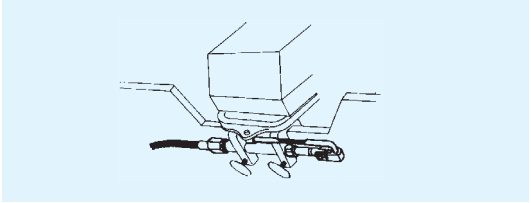
C = With tiller arm

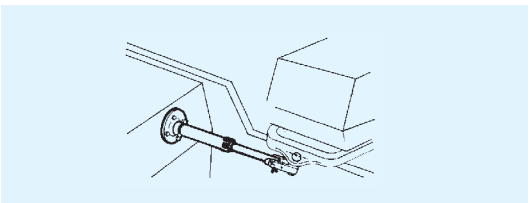
B = With splashwell

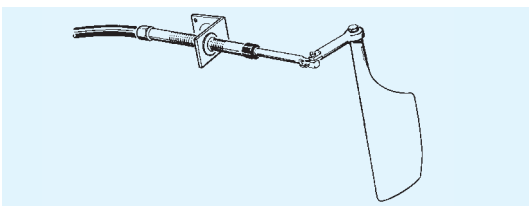
D = With 90° rudder support

A88 - A92 TIE BARS FOR TWIN OUTBOARD ENGINES

Universal tie bars applicable to twin outboard engines using mechanical steering.
For applications with hydraulic steering systems please refer to hydraulic steering system section.

A88 - 40128 E
- Adjustable from 650 mm (25.6”) to 950 mm (37.4”) engine centers
- All stainless steel components
- Kit includes all mounting hardware

WARNING: On those applications where the clearance between engine tiller arm and cowling is not sufficient fot the use of the **A88**, the **A92** tie bar is recommended

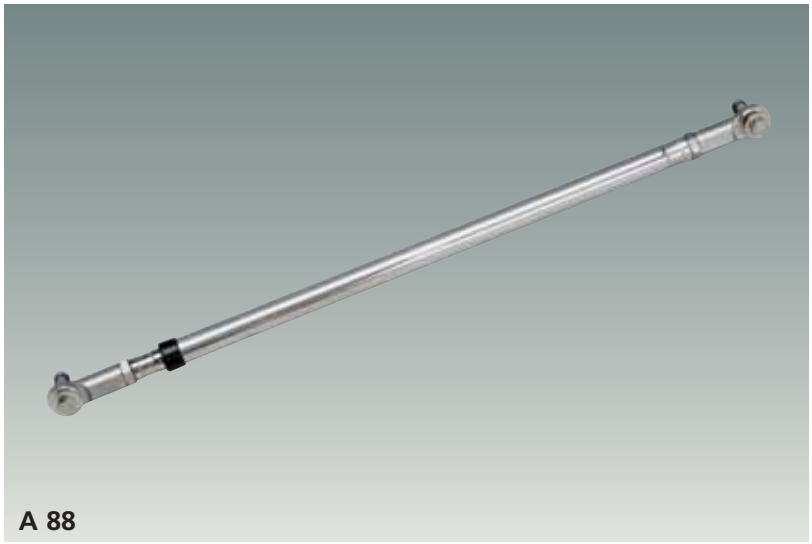
A 88

A92/700 - 40892 V
A92/950 - 40893 X
- Easily adjustable before or after installation
- All stainless steel components
- **A92/700:** Adjustable from 550 mm (21.6”) to 700 mm (27.5”) engine centers
- **A92/950:** Adjustable from 700 mm (27.5”) to 950 mm (37.4”) engine centers

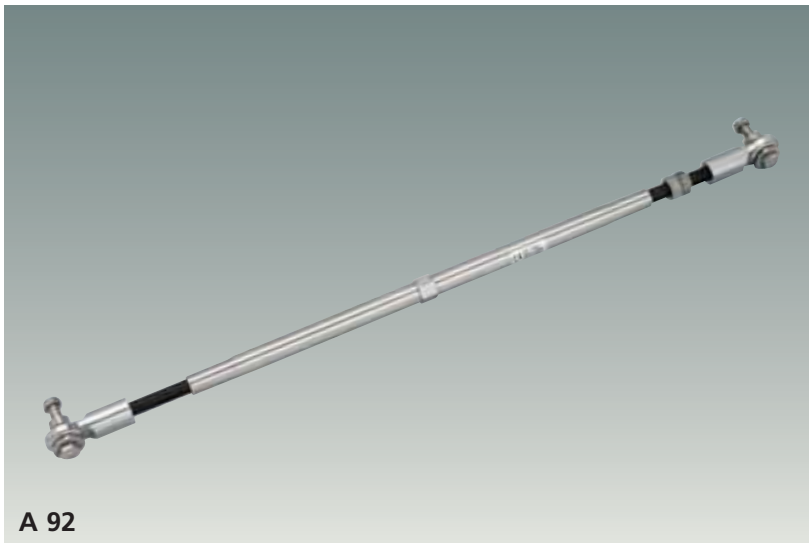
A 92

WIRE TYPE STEERING GROMMETS AND RINGS

BLACK GROMMETS
R1 B - 38060 I - Ø 152 mm (6”); h 110 mm (4.3”)
R2 B - 38061 J - Ø 105 mm (4.1”); h 65 mm (2.5”)
R3 B - 38062 K - 2 holes Ø 105 mm (4.1”); h 52 mm (2”)
R4 B - 38827 V - Adjustable Ø 105 mm (4.1”); h 68 mm (2.6”)


R1 B R2 B R3 B R4 B

WHITE GROMMETS
R1 W - 38953 A - Ø 152 mm (6”); h 110 mm (4.3”)
R2 W - 38954 C - Ø 105 mm (4.1”); h 65 mm (2.5”)
R3 W - 38955 E - 2 holes Ø 105 mm (4.1”); h 52 mm (2”)
R4 W - 38956 G - Adjustable Ø 105 mm (4.1”); h 68 mm (2.6”)

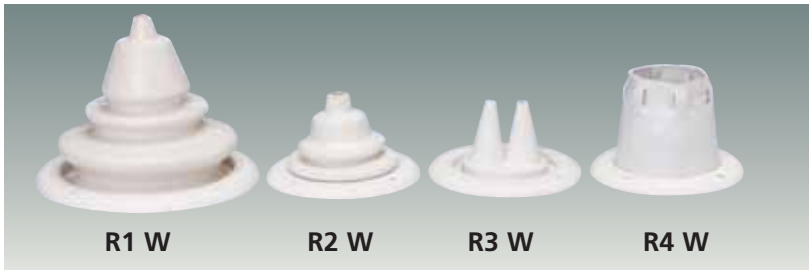
R1 W R2 W R3 W R4 W

GREY GROMMETS
R1 G - 39279 V - Ø 152 mm (6”); h 110 mm (4.3”)
R2 G - 39280 D - Ø 105 mm (4.1”); h 65 mm (2.5”)
R3 G - 39281 F - 2 holes Ø 105 mm (4.1”); h 52 mm (2”)

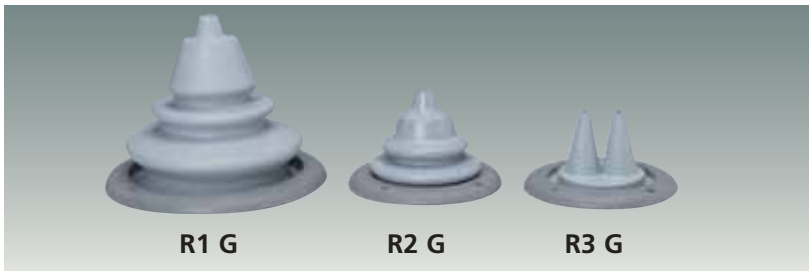
R1 G R2 G R3 G



ROTECH

ULTRAFLEX ROTARY STEERING SYSTEM PACKAGED IN A BOX

A convenient kit form, especially suitable as replacement steering, that includes helm, bezel and cable.
The cable is available in 1-ft increments from 8 to 20 feet (specify cable length when ordering)

The wheel is not included

ROTECH - I

T71FC - helm
X34 - 90° bezel
M66 - steering cable

ROTECH - III

T73NRFC® - non-reversible helm
X34 - 90° bezel
M66 - steering cable

ROTECH - IV

T67 - helm and bezel
M58 - steering cable

ROTECH - V

T85 - helm and bezel
M66 - steering cable

ROTECH - I

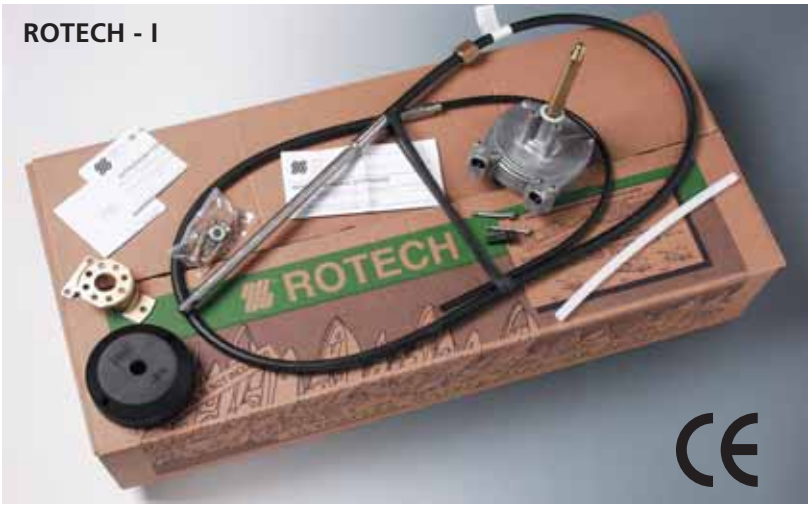

ROTECH - III

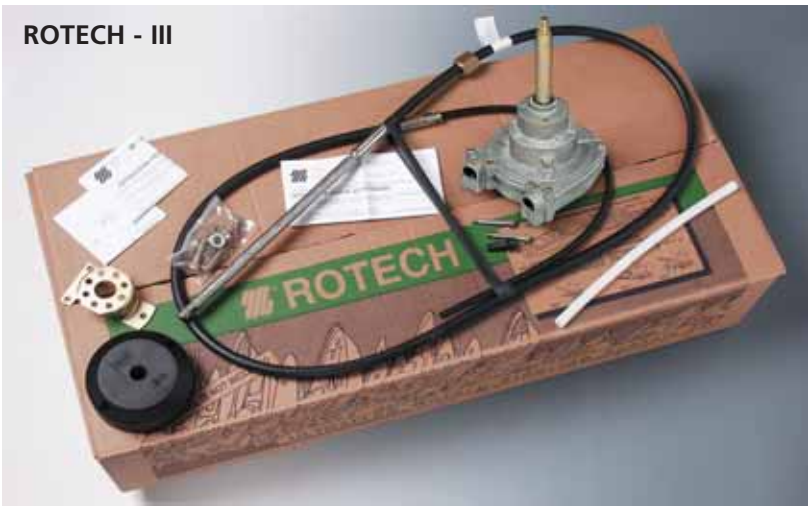

ROTECH - IV

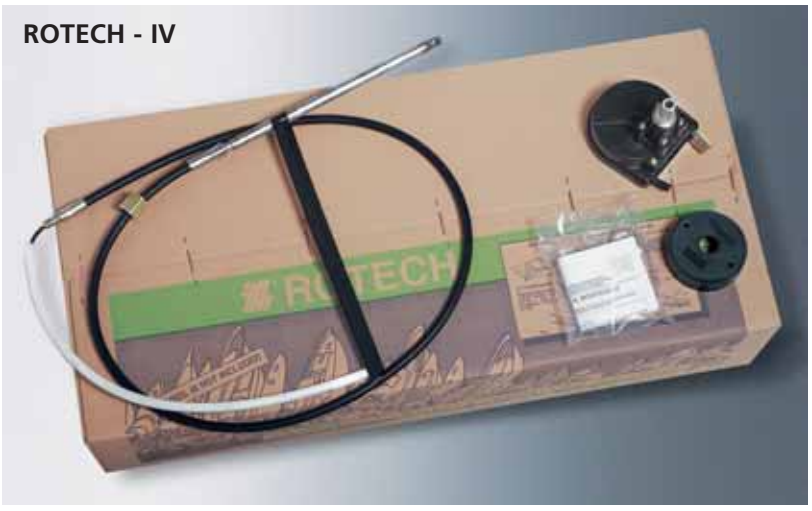

ROTECH - V







SUGGESTION AND WARNINGS WHEN SELECTING A HYDRAULIC STEERING SYSTEM

HOW THE SYSTEM WORKS

A hydraulic steering system consists of a steering pump, a cylinder tied to the rudder or to the outboard or sterndrive engine and the connecting nylon or copper tubing. Under normal operating conditions, a turn of the steering wheel will pump the oil through one of the two connecting hydraulic lines into the cylinder's chamber either extending or retracting the cylinder rod.
The fluid going out from the other chamber of the cylinder is returned to the helm via the other hydraulic line.
There are two basic components in all the hydraulic steering systems: the helm unit and the cylinder, connected by nylon or copper tubing. The helm unit consists of both a hydraulic pump and a valve assembly.
The valve assembly prevents outgoing fluid from returning along the same line, isolates each steering station, locks the rudder and eliminates rudder "feedback" to the helm.
The cylinders are double acting and may be balanced or unbalanced (in which case the rod extends through only one end of the cylinder).

SELECTION OF A HYDRAULIC STEERING SYSTEM

The strength required to drive a boat equipped with a hydraulic steering system is inversely proportional to the number of turns of the wheel lock-to-lock. The wheel turns are determined by the ratio between the cylinder volume and pump displacement.
With the same type of cylinder installed on the engine, the less are the turns, the faster is the response but higher is the effort; more wheel turns, slower is the response and lower is the effort.
Other factors that can influence steering effort are:

- Vessel speed
- Rudder dimension, or engine power
- Hull type (displacement, planing, etc.)

OUTBOARD CYLINDERS Maximum power rating applicable

Cylinder model	Single engine single cylinder	Double engine single cylinder		Double engine double cylinder	
		NON counter rotating propellers	counter rotating propellers	NON counter rotating propellers	counter rotating propellers
	Power max hp	Power max hp	Power max hp	Power max hp	Power max hp
UC94-OBF	150	not applicable	not applicable	not applicable	not applicable
UC68-OBS	150	not applicable	not applicable	not applicable	not applicable
UC128-OBF	300	300	500	500	600
UC128-SVS	350	350	600	600	700
UC132-OBS	300	300	450	500	600

STEERING WHEEL TURNS single cylinder

	UP20 20cc	UP25 25cc	UP28 28cc	UP33 33cc	UP 39 39cc	UP45 45 cc	UP28-SVS 28cc	UP33-SVS 33cc	UP39-SVS 39cc
UC94-OBF	4,7	-	-	-	-	-	-	-	-
UC128-OBF	-	4,8	4,3	3,6	3,1	-	-	-	-
UC128-SVS	-	-	-	-	-	-	4,3	3,6	3,1
UC68-OBS	3,4/5,0	-	-	-	-	-	-	-	-
UC132-OBS	-	5,3/6,5	4,7/5,8	4,0/4,9	3,4/4,2	2,9/3,6	-	-	-
UC133-IOB	-	5,6	4,7	4,0	3,4	2,9	-	-	-
UC69-I	3,5	-	-	-	-	-	-	-	-
UC116-I	-	4,6	4,1	3,5	3,0	-	-	-	-
UC168-I	-	6,7	6,0	5,1	4,3	3,7	-	-	-
UC215-I	-	8,6	7,7	6,5	5,5	-	-	-	-
UC293-I	-	-	-	8,9	7,5	6,5	-	-	-
UC378-I	-	-	-	-	9,7	8,4	-	-	-

STEERING WHEEL TURNS double cylinder

	UP28 28cc	UP33 33cc	UP39 39cc	UP45 45cc	UP33-SVS 33cc	UP39-SVS 39cc
UC128-OBF	-	7,3	6,2	5,3	-	-
UC128-SVS	-	-	-	-	7,3	6,2
UC132-OBS	-	8,0/9,8	6,8/8,4	5,8/7,2	-	-
UC133-IOB	-	8,0	6,8	5,8	-	-
UC116-I	8,2	7,0	6,0	5,2	-	-
UC168-I	-	-	8,6	7,4	-	-
UC215-I	-	-	-	9,5	-	-

Suggested

WARNING: These recommendations should be used as a general reference only. Final selection should be made with the assistance of a qualified installation technician.
For any further information please contact our Technical Service

SINGLE STEERING STATION INSTALLATION DIAGRAM

A) 3/8" T fitting	39502 V
B) non vented filler plug	40802 R
C) TU95 - 3/8" nylon tube (1m)	70701 D
D) SF38 - 3/8" straight fitting	39471 L

Kit 95-2S -	39518 L includes 2xA+B+2xD
Kit OB-2S -	39539 V includes 2xA+B+8mxC+2xD

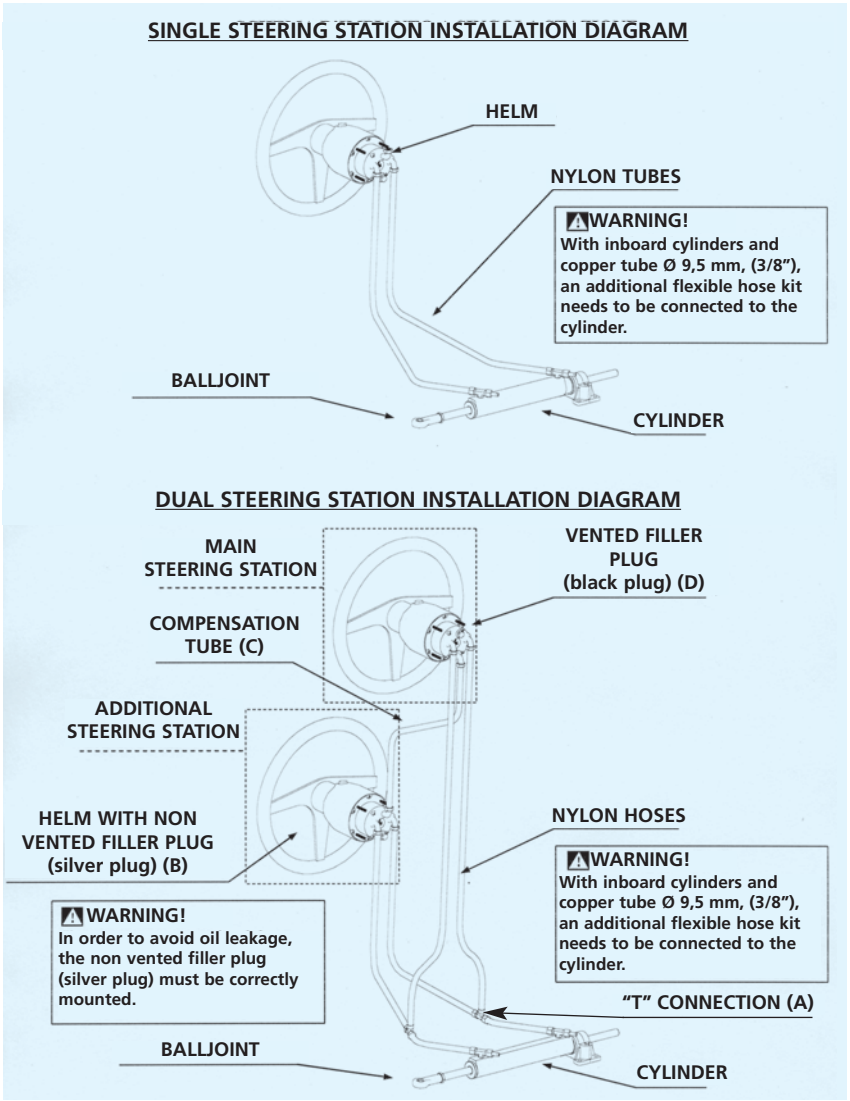

CROSS REFERENCE

HELM PUMPS

ULTRAFLEX	TELEFLEX®
UP20 F	BayStar™ HH4314
UP20 T	BayStar™ HH4315
UP25 F	Seastar™ 1.7 HH5269
UP25NV F	Seastar™ 1.7 HH5761
UP25 T	Seastar™ 1.7 HH5744
UP28 F	Seastar™ 1.7 HH5271
UP28 T	Seastar™ 1.7 HH5741
UP 28 R	Seastar™ 1.7 HH5261
UP33 F	Seastar™ 2.0 HH5273
UP33NV F	Seastar™ 2.0 HH5760
UP33 T	Seastar™ 2.0 HH5743
UP33 R	-
UP39 F	Seastar™ 2.4 HH5272
UP39 T	Seastar™ 2.4 HH5742
UP39 R	Seastar™ 2.4 HH5262
UP45 F	-
UP45 T	-
UP45 R	-
UP45-I R	-
UP28 F-SVS	Seastar™ PRO - HH5779
UP28 T-SVS	Seastar™ PRO - HH5773
UP33 F-SVS	Seastar™ PRO - HH5770
UP33 T-SVS	Seastar™ PRO - HH5774
UP39 F-SVS	Seastar™ PRO - HH5772
UP39 T-SVS	Seastar™ PRO - HH6189

CYLINDERS

ULTRAFLEX	TELEFLEX®
UC94-OBF	Seastar™ HC4645
UC128-OBF	Seastar™ HC5345
UC128-SVS	Seastar™ HC5345
UC68-OBS	-
UC132-OBS	Seastar™ HC5370
UC69-I	-
UC116-1	Seastar™ HC5312
UC168-I	Seastar™ HC5318
UC215-I	Seastar™ HC5319
UC293-I	-
UC378-I	-

The above Cross Reference chart has been drawn to facilitate a functional comparison among brands and should be used as general reference only. For any further information please contact our Technical Service



BubbleBuster™
A PORTABLE DEVICE FOR AUTOMATIC FILLING AND PURGING OF HYDRAULIC SYSTEMS

The BubbleBuster™ device is contained in a practical box easy to carry thanks to wheels; it is easy to use allowing a clean and extremely efficient bleeding.
One man can easily perform by himself a complete purging of a hydraulic system in just five minutes with no oil spillage on the boat deck.
BubbleBuster™ produces a special zero emulsion effect eliminating all traces of air from the oil. It is compatible with both cylinders with fast connect bleeders DN5 type: QCFN and QCFN94 and to cylinders with traditional bleeders by adding kits KH94 and KH128. It is compatible with Teleflex® systems.



BubbleBuster™

COMPONENTS INCLUDED

- No. 1 motor pump with safety valve , switch and 5 litres (1 gal) tank included, it allows the purging of 2 hydraulic steering systems before refilling. 12v electric motor with thermal protection; current absorption 8 A
- No. 1 4m (13') electric harness with alligator clips for fast connection with the battery.
- No. 1 double spiralled hose to connect to helm pump- extended length: 6m (19,6')
- No. 1 double spiralled hose to connect to cylinder – extended length: 6m (19,6')
- No. 1 utility tray

OPTIONAL COMPONENTS

- **KBE1**: No. 1 double spiralled hose to connect to cylinder 15 m (49') extension
- **KBD2**: No. 1 kit for double cylinder systems filling and purge
- **KH94**: Connection kit for UC94-OBF cylinders with not fast connect bleeders
- **KH128**: Connection kit for cylinders (except UC94) with old bleeders (not fast connect)

MODEL	PART No.	DESCRIPTION
BB	41666 R	BubbleBuster™ - complete set
KBE1	41682 N	Extension kit
KBD2	41703 U	Double cylinder purging kit
KH94	41899 R	Connection kit for UC94 (not fast connect bleeders)
KH128	41900 W	Connection kit for cylinders with old fittings (except UC94)

UP20 F - UP20 T
HELM PUMPS



UP20 F

FEATURES

- Built-in lock valve for positive rudder lock
- Integral relief valve for over-pressure protection
- 3/4" tapered anodized aluminun shaft
- Corrosion proof composite housing
- Easy accessible lock valve and shaft seal for replacement
- Complete with elbow fittings for 3/8" tube
- For use with UC94-OBF, UC68-OBS and UC69-I cylinders only
- Tilt mechanism **X52** - 39250 U for UP20 T pump
  Tilt range of 48° and five locking positions
  NOTE: X52 tilt mechanism fits all Ultraflex tilt mount rotary and rack and pinion steering helms as well as all Ultraflex tilt mount hydraulic pumps
- **X64** - 40198 C square flange permits to install the UP20F pump in an intermediate dashboard position



UP20 T + X52



UP20 F + X64

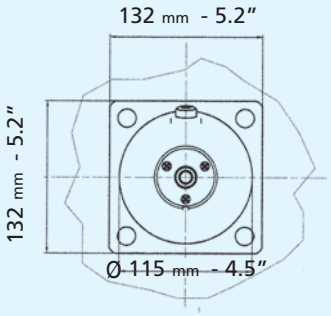

X64

MOD.	P. No.	MOUNTING	DISPLACEMENT/ REVOLUTION	No. OF PISTONS	RELIEF VALVE SETTING	MAXIMUM WHEEL DIA.	WEIGHT
UP20 F	**37939 U**	Front mount	20 cc - 1.2 cu. in	5	70 Bar - 1000 PSI	508 mm - 20"	3,6 kg - 8 lbs
UP20 T	**40153 D**	With X52 tilt	20 cc - 1.2 cu. in	5	70 Bar - 1000 PSI	406 mm - 16"	3,9 kg - 8.5 lbs

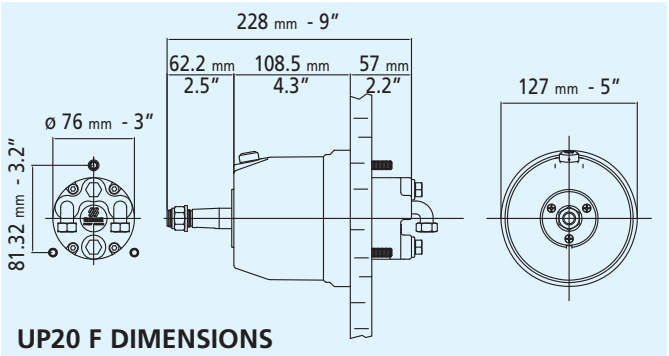

UP20 F DIMENSIONS

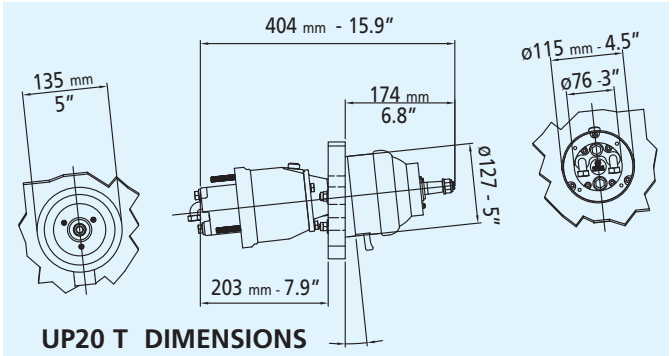

UP20 T DIMENSIONS



UP25 F - UP25NV F
UP28 F - UP33 F - UP33NV F
UP39 F - UP45 F NEW
FRONT MOUNT HELM PUMPS



FEATURES

- Available in five different displacement sizes
- UP25F and UP33 F models are also available without built-in lock valve (**UP25NV F** and **UP33NV F** models)
- Compact design
- Ball bearing piston race
- Built-in lock valve for positive rudder lock (except UP25 NV F and UP33NV F)
- Integral relief valve for over-pressure protection
- 3/4" tapered stainless steel shaft
- Easily accessible lock valve and shaft seal for replacement
- Cast iron rotor for greater durability and longer life
- 1/4" NPT fitting for 3/8" tube
- Complete with elbow fittings
- **UP45 F** pumps are ideal for double cylinder applications
- **X64** - 40198 C square flange or **X57** - 39464 P round flange permit to install the pumps in an intermediate dashboard position.



UP25 F/28 F/33 F/39 F/45 F + X64



UP25 F/28 F/33 F/39 F/45 F + X57

MOD.	P. No.	MOUNTING	DISPLACEMENT/ REVOLUTION	No. OF PISTONS	RELIEF VALVE SETTING	MAXIMUM WHEEL DIA.	WEIGHT
UP25 F	**39618 R**	Front mount	25 cc - 1.5 cu.in	5	70 Bar - 1000 PSI	710 mm - 28"	5 kg - 11 lbs
UP25NV F	**41273 V**	Front mount	25 cc - 1.5 cu.in	5	70 Bar - 1000 PSI	710 mm - 28"	5 kg - 11 lbs
UP28 F	**39443 F**	Front mount	28 cc - 1.7 cu.in	5	70 Bar - 1000 PSI	710 mm - 28"	5 kg - 11 lbs
UP33 F	**39422 X**	Front mount	33 cc - 2.0 cu.in	7	70 Bar - 1000 PSI	710 mm - 28"	5 kg - 11 lbs
UP33NV F	**41275 Z**	Front mount	33 cc - 2.0 cu.in	7	70 Bar - 1000 PSI	710 mm - 28"	5 kg - 11 lbs
UP39 F	**39415 A**	Front mount	39 cc - 2.4 cu.in	7	70 Bar - 1000 PSI	710 mm - 28"	5 kg - 11 lbs
UP45 F	**41276 B**	Front mount	45 cc - 2.7 cu.in	7	70 Bar - 1000 PSI	710 mm - 28"	5 kg - 11 lbs

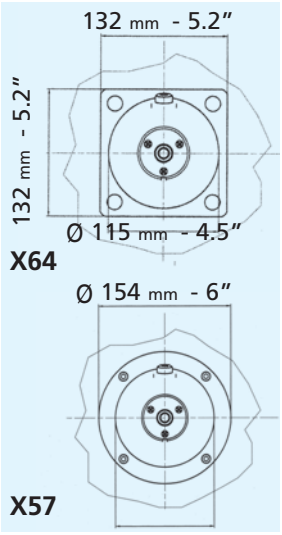

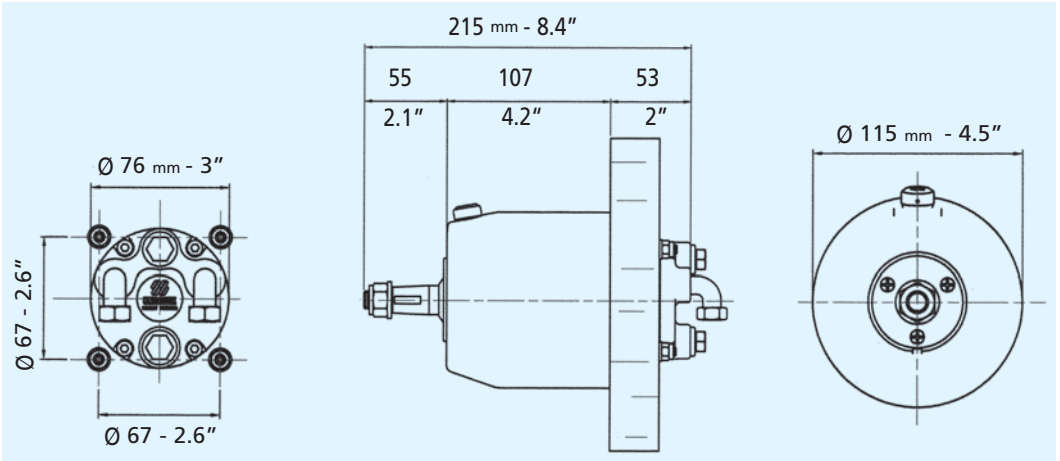

UP25 F, UP25NV F, UP28 F, UP33 F, UP33NV F, UP39 F, UP45 F DIMENSIONS

UP25 T - UP28 T - UP33 T
UP39 T - UP45 T NEW
TILT MOUNT HELM PUMPS



FEATURES

- Available in four different displacement sizes
- Compact design
- Ball bearing piston race
- Built-in lock valve for positive rudder lock
- Integral relief valve for over-pressure protection
- Stainless steel shaft
- Easily accessible lock valve and shaft seal for replacement
- Cast iron rotor for greater durability and longer life
- 1/4" NPT fitting for 3/8" tube
- Complete with elbow fittings
- **UP45 F** pumps are ideal for double cylinder applications
- Tilt mechanism:
  X52 - 39250 U
  Tilt range of 48° and five locking positions

  NOTE: X52 tilt mechanism fits standard Ultraflex tilt mount rotary and rack and pinion steering helms as well as standard Ultraflex tilt mount hydraulic pumps. On high performance SilverSteer™ systems use **X70-SVS** tilt mechanism

- **KIT F** (optional) - 39664 Y Remote fill adapter





X52

MOD.	P. No.	MOUNTING	DISPLACEMENT/ REVOLUTION	No. OF PISTONS	RELIEF VALVE SETTING	MAXIMUM WHEEL DIA.	WEIGHT
UP25 T	**40803 T**	With X52 tilt	25 cc - 1.5 cu.in	5	70 Bar - 1000 PSI	406 mm - 16"	5 kg - 11 lbs
UP28 T	**39445 K**	With X52 tilt	28 cc - 1.7 cu.in	5	70 Bar - 1000 PSI	406 mm - 16"	5 kg - 11 lbs
UP33 T	**39446 M**	With X52 tilt	33 cc - 2.0 cu.in	7	70 Bar - 1000 PSI	406 mm - 16"	5 kg - 11 lbs
UP39 T	**39447 P**	With X52 tilt	39 cc - 2.4 cu.in	7	70 Bar - 1000 PSI	406 mm - 16"	5 kg - 11 lbs
UP45 T	**41277 D**	With X52 tilt	45 cc - 2.7 cu.in	7	70 Bar - 1000 PSI	406 mm - 16"	5 kg - 11 lbs

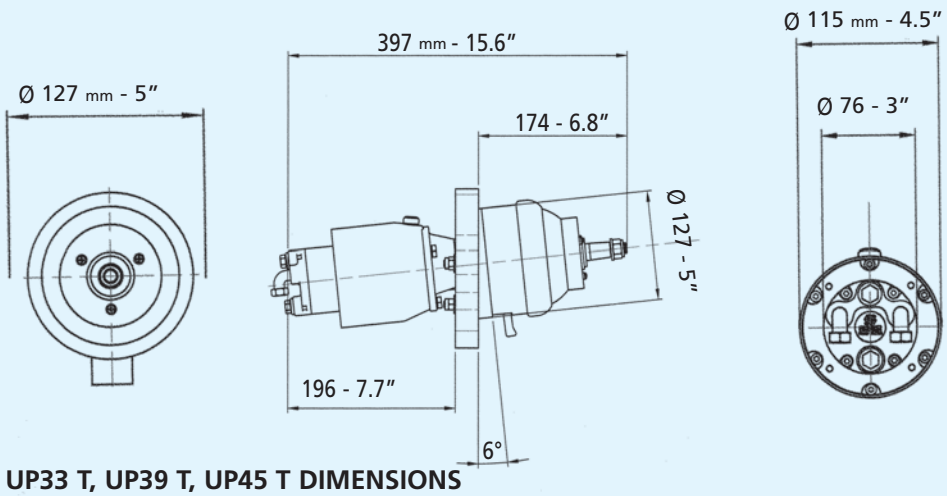

UP25 T, UP28 T, UP33 T, UP39 T, UP45 T DIMENSIONS



UP28 R - UP33 R - UP39 R
UP45 R NEW
REAR MOUNT HELM PUMPS



FEATURES

- Available in four different displacement sizes
- Compact design
- Ball bearing piston race
- Built-in lock valve for positive rudder lock
- Integral relief valve for over-pressure protection
- 3/4" tapered stainless steel shaft
- Easily accessible lock valve and shaft seal for replacement
- Cast iron cylinder rotor for greater durability and longer life
- 1/4" NPT fitting for 3/8" tube
- Complete with elbow fittings and white bezel
- **UP45 R** pumps are ideal for double cylinder applications
- **X68** (optional) - 40894 Z Chrome bezel

- **KIT F** (optional) - 39664 Y Remote fill adapter


KIT F


X68

MOD.	P. No.	MOUNTING	DISPLACEMENT/ REVOLUTION	No. OF PISTONS	RELIEF VALVE SETTING	MAXIMUM WHEEL DIA.	WEIGHT
UP28 R	**39970 F**	Rear mount	28 cc - 1.7 cu.in	5	70 Bar - 1000 PSI	710 mm - 28"	5 kg - 11 lbs
UP33 R	**39969 X**	Rear mount	33 cc - 2.0 cu.in	7	70 Bar - 1000 PSI	710 mm - 28"	5 kg - 11 lbs
UP39 R	**39444 H**	Rear mount	39 cc - 2.4 cu.in	7	70 Bar - 1000 PSI	710 mm - 28"	5 kg - 11 lbs
UP45 R	**41278 F**	Rear mount	45 cc - 2.7 cu.in	7	70 Bar - 1000 PSI	710 mm - 28"	5 kg - 11 lbs

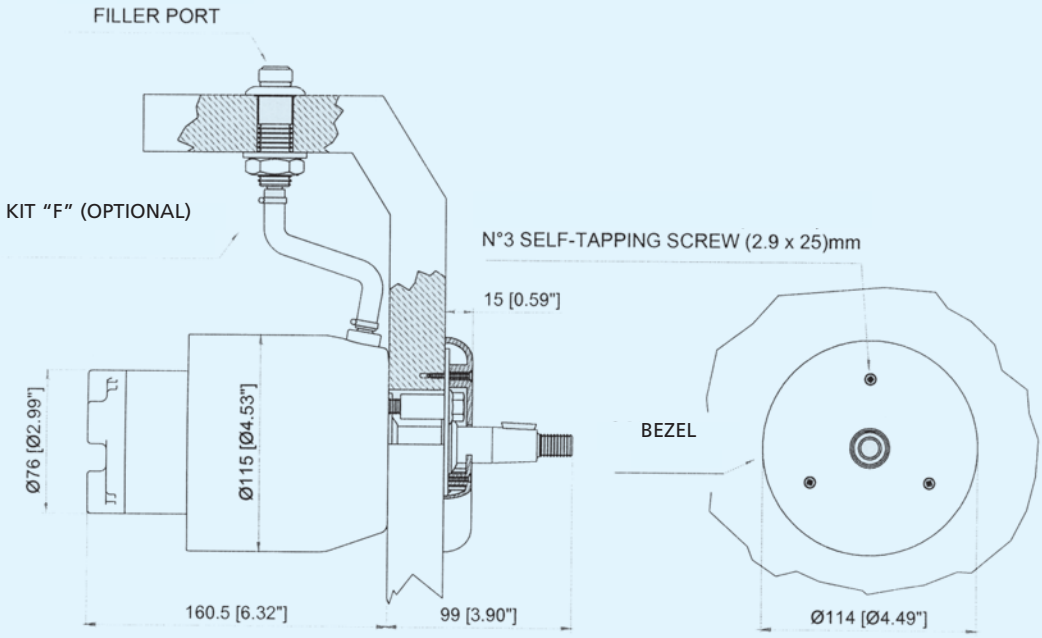

UP28 R, UP33 R, UP39 R, UP45 R DIMENSIONS

UP45-I R
REAR MOUNT
HELM PUMP
FOR 12 mm TUBE





FEATURES

- Compact design
- Ball bearing piston race
- Built-in lock valve for positive rudder lock
- Integral relief valve for over-pressure protection
- 3/4" tapered stainless steel shaft
- Easily accessible lock valve and shaft seal for replacement
- Cast iron cylinder rotor for grater durability and longer life
- **1/4" NPT fitting for 12 mm tube**
- Complete with elbow fittings and white bezel
- **X68** (optional) – 40894 Z Chrome bezel
- **KIT F** (optional) – 39664 Y Remote fill adapter

Note: It is possible to transform the UP45 R pump (41287 F) in UP45-I R pump (41279 H) ordering the kit **KIT SF12** (41907 L) that includes 2 straight fittings for 12 mm tube


KIT F


X68

MOD.	P. No.	MOUNTING	DISPLACEMENT/ REVOLUTION	No. OF PISTONS	RELIEF VALVE SETTING	MAXIMUM WHEEL DIA.	WEIGHT
UP45-I R	**41279 H**	Rear mount	45 cc - 2.7 cu.in	7	70 Bar - 1000 PSI	710 mm - 28"	5 kg - 11 lbs

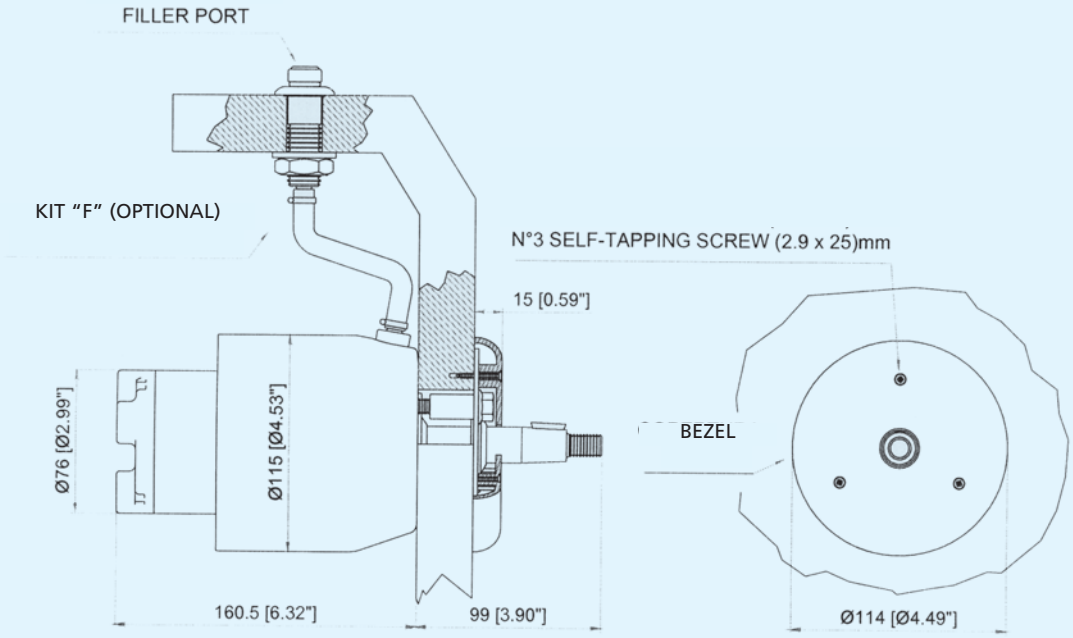

UP45-I R DIMENSIONS



UC94-OBF FRONT MOUNT CYLINDER FOR OUTBOARD ENGINES UP TO 150 HP TOTAL



UC94-OBF - Balanced: the number of turns lock-to-lock is equal port to starboard or vice-versa

Depending on the applications on the outboard engines, the UC94-OBF cylinder is available in 2 versions:

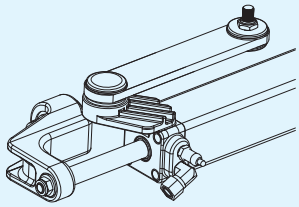

UC94-OBF/1 **40154 F**

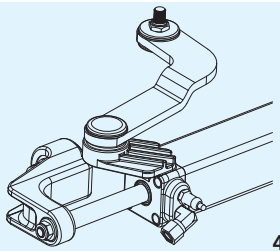

UC94-OBF/3 **40161 C**

SPECIFICATIONS	UC94-OBF/1 -/3
Volume	94 cc - 5.7 cu. in
Output force	278 kg - 613 lbs
Inside diameter	30 mm - 1.18”
Stroke	186 mm - 7.3”
3/8” (9.5mm) Fittings	For high pressure flex hose
Bleed fittings	DN5 Quick connect

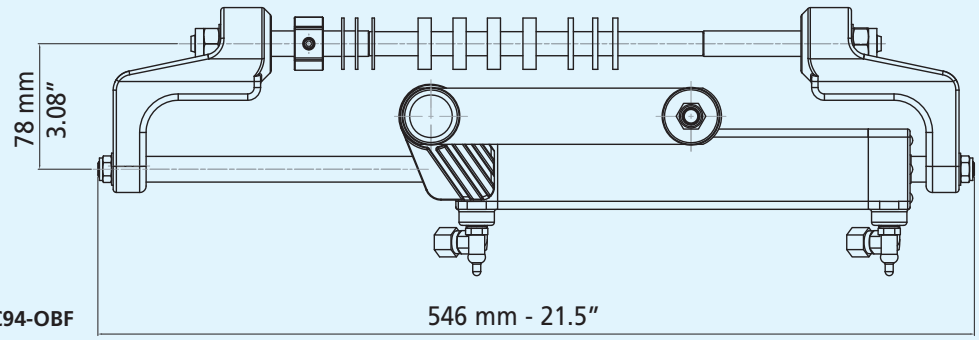

UC94-OBF

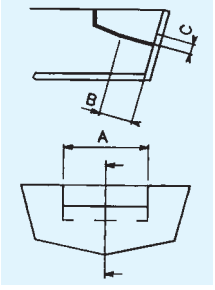

SPLASHWELL DIMENSION REQUIREMENTS			
Engine No.	**A**	**B**	**C**
1	540 mm - 21.25”	152 mm - 5.98”	152 mm - 5.98”
2	1110 mm - 43.70”	152 mm - 5.98”	152 mm - 5.98”

For twin engine applications, the minimum distance between the two engine centers is 21.6” (550 mm)

INNOVATIVE NEW DESIGN (PATENTED):
Split cylinder mounting rod for easy installation and bushings to prevent friction with engine tilt tube.



WARNING
The UC94-OBF front mount cylinder is recommended for use with outboard engines 150 hp total and less and where the boat speed does not exceed 40 mph (40 knots)

Not intended for use in racing application

WARNING
These recommendations should be used as a general reference only. For any further information please contact our Technical Service.

ENGINE	POWER	YEAR	CYLINDER	P. No.
Mercury® Mariner®	F50 EFI – F60 EFI 4 Stroke F75 – F90 4 Stroke 115 EFI 4 Stroke 75 – 90 – 115 OPTIMAX 2 Stroke 135 – 150 OPTIMAX 2 Stroke 75 – 90 2 Stroke	1990-2008 1990-2007 2004-to date 1999-to date 2004-to date 2000-to date 2007-to date	UC94-OBF/1 UC94-OBF/1 UC94-OBF/3 UC94-OBF/1 UC94-OBF/1 UC94-OBF/1 UC94-OBF/1	40154 F 40154 F 40161 C 40154 F 40154 F 40154 F 40154 F
Evinrude®	E40-E50-E55-E60 2T E75-E90 2T E115-E130-E135 2T V4 E150 2T V6	2004-to date 2004-to date 1995-to date 1995-to date	UC94-OBF/1 UC94-OBF/1 UC94-OBF/1 UC94-OBF/1	40154 F 40154 F 40154 F 40154 F
Yamaha®	F80A - F100A 4 Stroke F115A 4 Stroke F150A 4 Stroke 75C 2 Stroke 115C - 130B 2 Stroke 150F 2 Stroke 150 HPDI 2 Stroke	1984-2008 1998-2008 1990-2008 1996-2007 2000-2008 1999-2007 1999-2007 2000-to date 2004-to date	UC94-OBF/1 UC94-OBF/1 UC94-OBF/1 UC94-OBF/1 UC94-OBF/1 UC94-OBF/1 UC94-OBF/1 UC94-OBF/1 UC94-OBF/1	40154 F 40154 F 40154 F 40154 F 40154 F 40154 F 40154 F 40154 F 40154 F
Honda®	BF75-BF90 4T BF115-BF130 4T BF135-BF150 4T BF90-BF150 V-TEC 4T	1995-to date 1998-to date 2005-to date 2008-to date	UC94-OBF/1 UC94-OBF/3 UC94-OBF/1 UC94-OBF/1	40154 F 40161C 40154 F 40154 F
Suzuki®	DF70-80-90 4T DF100-115-140 4T DF150 4T	1998-to date 1998-to date 2006-to date	UC94-OBF/1 UC94-OBF/1 UC94-OBF/1	40154 F 40154 F 40154 F
Tohatsu® Nissan®	50-60-70-90 2T 115-120-140 2T 40-50TLDI 4T 70-90-115 TLDI 4T	2004-to date 2004-to date 2004-to date 2004-to date	UC94-OBF/1 UC94-OBF/1 UC94-OBF/1 UC94-OBF/1	40154 F 40154 F 40154 F 40154 F
Selva®	50 MADEIRA/ BULL SHARK-60 GREY SHARK/ST.TROPEZ- 70 MAKO SHARK 2T 80 PORTOFINO/TIGERSHARK 2T 150 WHITE SHARK 2T 50-60 DORADO EFI 4T 100EFI MARLIN -115 EFI NARWHAL-150EFI KILLER WHALE 4T	 1995-2008 2001-2007 2000-to date	UC94-OBF/1 UC94-OBF/1 UC94-OBF/1 UC94-OBF/1 UC94-OBF/1	40154 F 40154 F 40154 F 40154 F 40154 F
Johnson®	BJ60-70 4T BJ90-115-140 4T J90-115 V4 2T	2001-2007 2001-2007 1995-2007	UC94-OBF/1 UC94-OBF/1 UC94-OBF/1	40154 F 40154 F 40154 F



UC94-OBF/1 on SUZUKI® 150 HP



UC94-OBF/1 on HONDA® 150 HP



UC128-OBF FRONT MOUNT CYLINDER



UC128-OBF - Balanced: the number of turns lock-to-lock is equal port to starboard or vice-versa

Swiveling fittings for easy installation
High resistence stainless steel connection bolt (ULTRABOLT)

Depending on the applications on the outboard engines, the UC128-OBF is available in 3 versions:

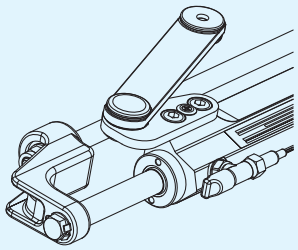

UC128-OBF/1 **39423 Z**

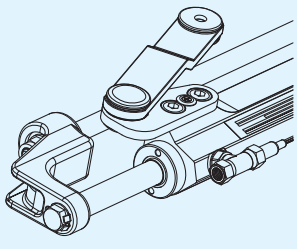

UC128-OBF/2 **39966 R**

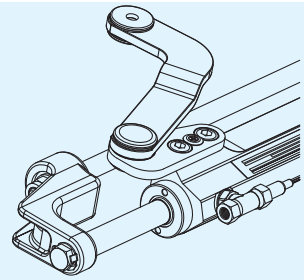

UC128-OBF/3 **39967 T**

In the applications with dual UC128-OBF cylinder it is necessary to order a standard UC128-OBF cylinder (link arm attached to the starboard side of the cylinder) and a port UC128P-OBF cylinder (link arm attached to the port side of the cylinder).
Depending on the applications on the outboard engines, the UC128P-OBF port cylinder is available in 2 versions:



UC128P-OBF

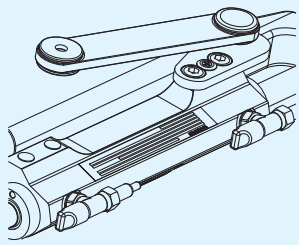

UC128P-OBF/1 **40106 U**

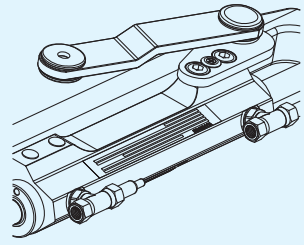

UC128P-OBF/2 **40107 W**

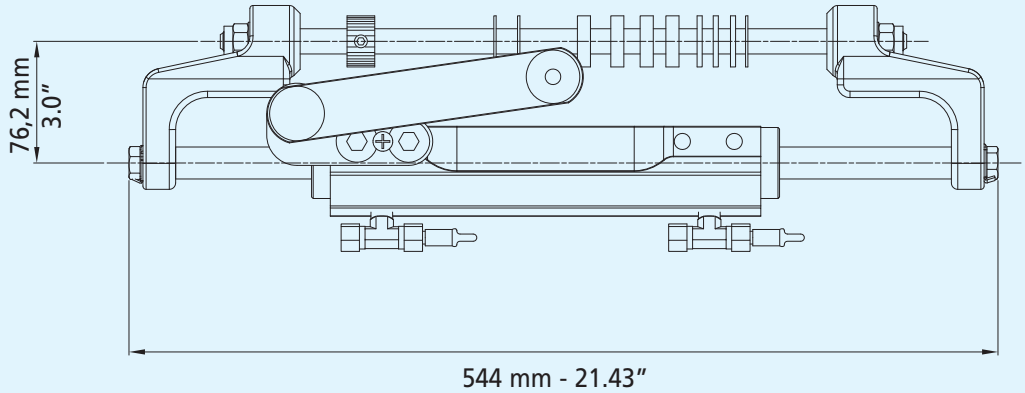

UC128-OBF DIMENSIONS



SPECIFICATIONS	UC128-OBF/1 -/2 -/3
Volume	120 cc - 7.3 cu. in
Output force	450 kg - 992 lbs
Inside diameter	35 mm - 1.37”
Stroke	185 mm - 7.28”
3/8” (9.5mm) Fittings	For high pressure flex hose
Bleed fittings	DN5 Quick connect

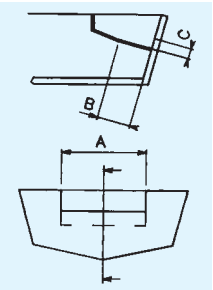

SPLASHWELL DIMENSION REQUIREMENTS			
Engine No.	A	B	C
1	560 mm - 22.05”	152 mm - 5.98”	152 mm - 5.98”
2	1110 mm - 43.70”	152 mm - 5.98”	152 mm - 5.98”

For twin engine applications minimum engine center distance is 21.6” (550 mm)

LA1, LA2, LA3 link arm kits for UC128-OBF standard cylinder and LA1P, LA2P link arm kits for UC128P-OBF port cylinder can also be supplied separately for the first application only, in case the UC128-OBF cylinder needs to be adapted to the already installed outboard engine (see application guide).

“STANDARD” LINK ARMS:



LA1 **40045 A**
for UC128-OBF/1



LA2 **40046 C**
for UC128-OBF/2



LA3 **40073 F**
for UC128-OBF/3

“PORT” LINK ARMS:



LA1P **40104 P**
for UC128P-OBF/1



LA2P **40105 S**
for UC128P-OBF/2

WARNING: LA1, LA2, LA3 and LA1P, LA2P link arm kits are recommended for use on the first installation **only** an **not** as a retrofit. Installation has to be made by qualified technicians only.
The tightening load to be applied to the screws of the link arm kit is recommended on the Installation Manual and the mounting instructions supplied with the products.



WARNING

These recommendations should be used as a general reference only. Final selection should be made with the assistance of a qualified installation technician.
For any further information please contact our Technical Service.

ENGINE	POWER	YEAR	CYLINDER	P. No.
Mercury® Mariner®	115-125-150 EFI 2T	1990-2007	UC128-OBF/1	39423 Z
	225-250 EFI 2T	2000-2007	UC128-OBF/1	39423 Z
	75-90-115 OPTIMAX	2004-to date	UC128-OBF/3	39967 T
	135-150-175 OPTIMAX	1999-to date	UC128-OBF/1	39423 Z
	200-225-250 OPTIMAX	1999-to date	UC128-OBF/1	39423 Z
	RACING 300 OPTIMAX		UC128-OBF/1	39423 Z
	100-115 EFI 4T	2007-to date	UC128-OBF/1	39423 Z
	250 SALTWATER EFI 4T	2004-2006	UC128-OBF/1	39423 Z
	135-150-175-200 VERADO L4		UC128-OBF/1	39423 Z
Evinrude®	E75-E90 2T	2004-to date	UC128-OBF/2	39966 R
	E115-E130-E135 2T V4	1995-to date	UC128-OBF/2	39966 R
	E150-E175-E200 2T V6	1995-to date	UC128-OBF/2	39966 R
	E200 HO- E225-E250 2T V6	1995-to date	UC128-OBF/2	39966 R
	E250HO- E300 2T V6		UC128-OBF/2	39966 R
Yamaha®	75C-90 2T	1998-2008	UC128-OBF/2	39966 R
	115C-130B 2T	1990-2008	UC128-OBF/2	39966 R
	150F-200F-250G 2T	1996-2007	UC128-OBF/2	39966 R
	150 HPDI VMAX 2T	2000-2008	UC128-OBF/2	39966 R
	175-200-225-250-300 HPDI VMAX 2T	2000-2008	UC128-OBF/2	39966 R
	F90-F100-F115-F150 EFI 4T	1999-2007	UC128-OBF/1	39423 Z
	F200-F225-F250 4T	2002-2007	UC128-OBF/2	39966 R
	F115-F150	2004-to date	UC128-OBF/1	39423 Z
	F200-F225-F250-F300-F350 4T	2006-to date	UC128-OBF/2	39966 R
Honda®	BF75-90 4T	1995-to date	UC128-OBF/1	39423 Z
	BF115-130 4T	1998-to date	UC128-OBF/3	39967 T
	BF135-150 4T	2005-to date	UC128-OBF/1	39423 Z
	BF90-BF150 V-TEC 4T	2008-to date	UC128-OBF/1	39423 Z
	BF175-200-225 4T	2001-to date	UC128-OBF/1	39423 Z
Suzuki®	DF70-80-90 4T	1998-to date	UC128-OBF/2	39966 R
	DF100-115-140 4T	1998-to date	UC128-OBF/1	39423 Z
	DF150-175 4T	2006-to date	UC128-OBF/1	39423 Z
	DF200-DF225-DF250-DF300		UC128-OBF/2	39966 R
Tohatsu®	115-120-140 2T	2004-to date	UC128-OBF/2	39966 R
	70-90-115 TLDI 4T	2004-to date	UC128-OBF/1	39423 Z
Selva®	80 PORTOFINO/TIGERSHARK 2T	1995-to date	UC128-OBF/1	39423 Z
	150 WHITE SHARK 2T			
	100EFI MARLIN -115 EFI NARWHAL-	2001-2007	UC128-OBF/2	39966 R
	150EFI KILLER WHALE 4T	2000-to date	UC128-OBF/1	39423 Z
Johnson®	BJ90-115-140 4T	2001-2007	UC128-OBF/1	39423 Z
	J90-115 V4 2T	1995-2007	UC128-OBF/2	39966 R
	J150-175 V6 2T	1995-2007	UC128-OBF/2	39966 R
	J200-225 V6 4T	2004-2007	UC128-OBF/2	39966 R



SYSTEM	APPLICATION	WHEEL TURNS	COMPONENTS	MODEL	Qty
Single engine Single cylinder 	Up to 300 hp max	4,8 (UP25) 4,3 (UP28)	Cylinder Helm pump Hose Kit Oil Steering wheel	UC128-OBF UP25 or UP28 KIT OB OIL 15 (page 71 - 86)	1 1 1 2 1
For a second station add: **1 UP25 or UP28 helm pump, 1 KIT OB-2S fitting kit, 1 KIT OB, 1 OIL 15, 1 steering wheel**					
Dual engine Single cylinder 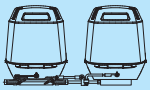	Up to 300 hp max (non-counter rotating engine) Up to 500 hp max (counter rotating engine)	4,8 (UP25) 4,3 (UP28)	Cylinder Helm pump Hose Kit Oil Tie bar Steering wheel	UC128-OBF UP25 or UP28 KIT OB OIL 15 A94 (page 71 - 86)	1 1 1 2 1 1
For a second station add: **1 UP25 or UP28 helm pump, 1 KIT OB-2S fitting kit, 1 KIT OB, 1 OIL 15, 1 steering wheel**					
Dual engine Dual cylinder 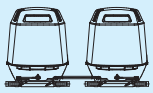	Up to 500 hp max (non-counter rotating engines) Up to 600 hp max (counter rotating engines)	6,1 (UP39) 5,3 (UP45)	Cylinder Cylinder Port Helm pump Hose Kit Oil Tie bar Steering wheel Connection Kit	UC128-OBF UC128P-OBF UP39 or UP45 KIT OB OIL 15 A90 (page 71 - 86) KIT OB-2C	1 1 1 2 3 1 1 1
For a second station add: **1 UP39 or UP45 helm pump, 1 KIT OB-2S fitting kit, 1 KIT OB, 2 T fittings 39502 V, 1 OIL 15, 1 steering wheel**					

WARNING
The UC128-OBF front mount cylinder is not recommended for use in installations where the boat speed exceeds **50 mph (50 knots)** (60 mph (60 knots) in dual engine, dual cylinder and counter rotating engines application).
Not intended for use in racing application.

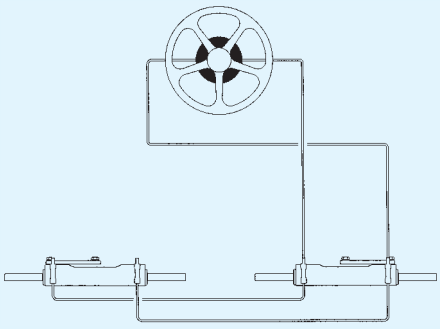

Dual engine dual cylinder application diagram

NOTE:
For high performance applications SilverSteer™ systems are recommended.

NOTE:
Three outboard engine applications are available with UC128-OBF cylinder. For any further and detailed information, please contact our Technical Service.





UC68-OBS SIDE MOUNT CYLINDER FOR OUTBOARD ENGINES UP TO 150 HP TOTAL



UC68-OBS - Unbalanced: the number of turns lock-to-lock is not equal port to starboard and vice-versa.

WARNING
Recommended for use where max boat speed do not exceed **40 mph (40 knots)**

SPECIFICATIONS	UC68-OBS - 39784 J
Volume	68/100 cc - 4.1/6.1 cu. in
Output force	185/270 kg - 408/595 lbs
Inside diameter	25 mm - 0.98"
Stroke	203 mm - 8"
3/8" (9.5mm) Fittings	For high pressure flex hose

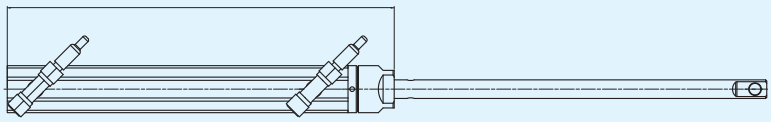

UC68-OBS

UC68-OBS side mount cylinder features a turning nut for a fast and easy installation to the engine tube (PATENTED)

Clearance required at the engine tube side: 13.3" (340 mm)

ORDER GUIDE:

SYSTEM	APPLICATION	WHEEL TURNS	COMPONENTS	MODEL	Qty
Single engine Single cylinder 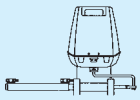	Up to 150 hp max	3,4/5	Cylinder Helm pump Hose Kit Oil Steering wheel	UC68-OBS UP20 KIT OB OIL 15 (page 71 - 86)	1 1 1 2 1

UC68 OBS cylinder is also available in kit:

HYCO-OBS WHEEL TURNS 3,4/5

For outboard engines up to 150 hp

HYCO–OBS package kit contains:

UP20 F Front mount helm pump.
UC68-OBS Side mount outboard cylinder.
OIL 15 Hydraulic oil – 2 litres.
KIT OB Hose kit with preassembled fittings - Specify length required when ordering.

HYCO-OBF not including KIT OB flexible hoses is available on request.
The wheel is not included.



HYCO-OBS

UC132-OBS SIDE MOUNT CYLINDER



UC132-OBS
Unbalanced: the number of turns lock-to-lock is not equal port to starboard and vice-versa

SPECIFICATIONS	UC132-OBS - 39430 W
Volume	132 / 163 cc - 8 / 9.95 cu. in
Output force	464 / 574 kg - 1023 / 1265 lbs
Inside diameter	32 mm - 1.25”
Stroke	203 mm - 8”
3/8” (9,5 mm) fittings	For high pressure flex hose

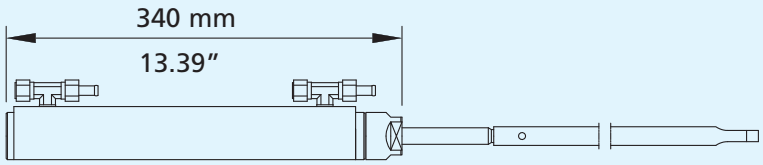

UC132-OBS DIMENSIONS

UC132-OBS side mount cylinder features a turning nut for a fast and easy installation to the engine tube (PATENTED)

Clearence required at the engine tube side: 375 mm (14.76”)

ORDER GUIDE:

SYSTEM	APPLICATION	WHEEL TURNS	COMPONENTS	MODEL	Qty
Single engine Single cylinder 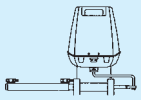	Up to 300 hp max	5,3/6,5 (UP25) 4,7/5,8 (UP28)	Cylinder Helm pump Hose Kit Oil Steering wheel	UC132-OBS UP25 or UP28 KIT OB OIL 15 (page 71 - 86)	1 1 1 2 1
For a second station add: **1 UP25 or UP28 helm pump, 1 KIT OB-2S fitting kit, 1 KIT OB, 1 OIL 15, 1 steering wheel**					
Dual engine Single cylinder 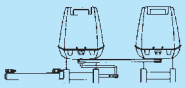	Up to 300 hp max (non-counter rotating engine) Up to 450 hp max (counter rotating engine)	5,3/6,5 (UP25) 4,7/5,8 (UP28)	Cylinder Helm pump Hose Kit Oil Tie bar Steering wheel	UC132-OBS UP25 or UP28 KIT OB OIL 15 A88 or A92 (page 71 - 86)	1 1 1 2 1 1
For a second station add: **1 UP25 or UP28 helm pump, 1 KIT OB-2S fitting kit, 1 KIT OB, 1 OIL 15, 1 steering wheel**					
Dual engine Dual cylinder 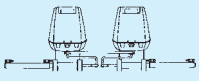	Up to 500 hp max (non-counter rotating engines) Up to 600 hp max (counter rotating engines)	6,7/8,3 (UP39) 5,8/7,3 (UP45)	Cylinder Helm pump Hose Kit Oil Tie bar Steering wheel Connection Kit	UC132-OBS UP39 or UP45 KIT OB OIL 15 A88 or A92 (page 71 - 86) KIT OB-2C	2 1 2 3 1 1 1
For a second station add: **1 UP39 or UP45 helm pump, 1 KIT OB-2S fitting kit, 1 KIT OB, 2 T fittings 39502 V, 1 OIL 15, 1 steering wheel** **WARNING: THIS APPLICATION REQUIRES THAT THE THREADS ON THE TILT TUBE EXTEND AT LEAST 15 mm (0.6”) FROM BOTH SIDES.**					

WARNING:
the UC132-OBS side mount cylinder is not recommended for use in installations where the boat speed exceeds **45 mph (45 knots)** and the power exceeds max Coast Guard recommendation for the boat.

Not intended for use in racing application.



PACKAGED OUTBOARD HYDRAULIC STEERING SYSTEMS

HYCO-OBF WHEEL TURNS 4,7

For outboard engines up to 150 hp

HYCO–OBF package kit contains:

UP20 F	Front mount helm pump.
UC94-OBF	Front mount outboard cylinder *Specify engine type when ordering.*
OIL 15	Hydraulic oil - 2 litres.
KIT OB	Hose kit with preassembled fittings - Specify length required when ordering

HYCO-OBF not including KIT OB flexible hoses is available on request.
The wheel is not included.

WARNING: Depending on the applications, the UC94-OBF is available in 2 versions: UC94-OBF/1 and UC94-OBF/3.
UC94-OBF/1 cylinder is not suitable for HONDA® BF115 and BF130 engines and Mercury® Optimax™ 75, 90, 115. For these engines UC94-OBF/3 is available.



HYCO-OBF

NAUTECH 1 WHEEL TURNS 4,5

NAUTECH 1 package kit contains:

UP28 F	Front mount helm pump.
UC128-OBF	Front mount outboard cylinder. *Specify engine type when ordering*
OIL 15	Hydraulic oil - 2 litres (0,5 gallons).
KIT OB	Hose kit with preassembled fittings - Specify length required when ordering

NAUTECH 1 not including KIT OB flexible hoses is available on request.
The wheel is not included.



NAUTECH 1

NAUTECH 3 WHEEL TURNS 5,1

NAUTECH 3 package kit contains:

UP25 F	Front mount helm pump.
UC128-OBF	Front mount outboard cylinder. *Specify engine type when ordering*
OIL 15	Hydraulic oil - 2 litres (0,5 gallons).
KIT OB	Hose kit with preassembled fittings - Specify length required when ordering

NAUTECH 3 not including KIT OB flexible hoses is available on request.
The wheel is not included.



NAUTECH 3

HIGH PERFORMANCE STEERING SYSTEMS
UP28 F-SVS – UP33 F-SVS – UP 39 F - SVS NEW
FRONT MOUNT HELM PUMPS



SilverSteer™ hydraulic steering systems consist of the following components: ball bearing piston race helm pumps UP-SVS complete with 45° adjustable fittings, a pair of high pressure Kevlar stranded flexible hoses KIT OB-SVS with preassembled stainless steel fittings providing less expansion at high pressure, a front mount outboard cylinder UC128-SVS featuring adjustable fittings.
The SilverSteer™ systems stand a higher maximum pressure then the standard ones: relief valve setting at 105 bar (1500 psi) instead of 70 bar (1000 psi).
The prompt reaction of the pump at these pressures is assured by a patented lock valve. UC128-SVS cylinder presents technical features that make the system particularly fast and stress resistant.



FEATURES

- Available in three different displacement sizes
- Compact design
- Ball bearing piston race
- Built-in lock valve for positive rudder lock
- **Integral relief valve for over-pressure protection 105 bar (1500 psi)**
- 3/4" tapered stainless steel shaft
- Easily accessible lock valve and shaft seal for replacement
- Cast iron rotor for greater durability and longer life
- **Complete with fittings adjustable at 45° for 3/8" tube**

MOD.	P. No.	MOUNTING	DISPLACEMENT/ REVOLUTION	No. OF PISTONS	RELIEF VALVE SETTING	MAXIMUM WHEEL DIA.	WEIGHT
UP28 F-SVS	**41280 S**	Front mount	28 cc - 1.7 cu.in	5	105 bar - 1500 PSi	710 mm - 28"	5 kg - 11 lbs
UP33 F-SVS	**41327 S**	Front mount	33 cc - 2.0 cu.in	7	105 bar - 1500 PSi	710 mm - 28"	5 kg - 11 lbs
UP39 F-SVS	**41876 C**	Front mount	39 cc - 2.4 cu.in	7	105 bar - 1500 PSi	710 mm - 28"	5 kg - 11 lbs

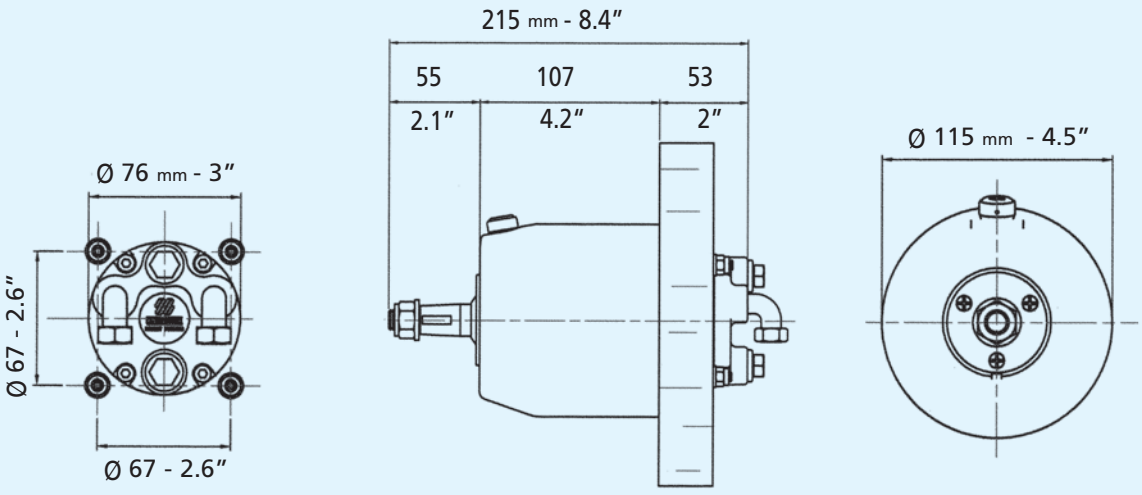

UP28 F-SVS, UP33 F-SVS and UP39 F-SVS DIMENSIONS



SilverSteer™

HIGH PERFORMANCE STEERING SYSTEMS

UP28 T-SVS – UP33 T-SVS
UP39 T-SVS
TILT MOUNT HELM PUMPS



FEATURES

- Available in three different displacement sizes
- Compact design
- Ball bearing piston race
- Built-in lock valve for positive rudder lock (patented)
- **Integral relief valve for over-pressure protection 150 bar (1500 psi)**
- Stainless steel shaft
- Easily accessible lock valve and shaft seal for replacement
- Cast iron rotor for greater durability and longer life
- Complete with fittings adjustable at 45° for 3/8" tube
- Tilt mechanism for SilverSteer™ systems:
  X70-SVS – 41880 T
- Tilt range of 48° and five locking positions

WARNING: X52 standard tilt mechanism cannot be used on SilverSteer™ high performance helm pumps
KIT-F (optional) – 39664 Y Remote fill adapter





MOD.	P. No.	MOUNTING	DISPLACEMENT/ REVOLUTION	No. OF PISTONS	RELIEF VALVE SETTING	MAXIMUM WHEEL DIA.	WEIGHT
UP28 T-SVS	41814 D	With X70-SVS	28 cc - 1.7 cu.in	5	105 Bar - 1500 PSI	406 mm - 16"	5 kg - 11 lbs
UP33 T-SVS	41815 F	With X70-SVS	33 cc - 2.0 cu.in	7	105 Bar - 1500 PSI	406 mm - 16"	5 kg - 11 lbs
UP39 T-SVS	41881 V	With X70-SVS	39 cc - 2.4 cu.in	7	105 Bar - 1500 PSI	406 mm - 16"	5 kg - 11 lbs

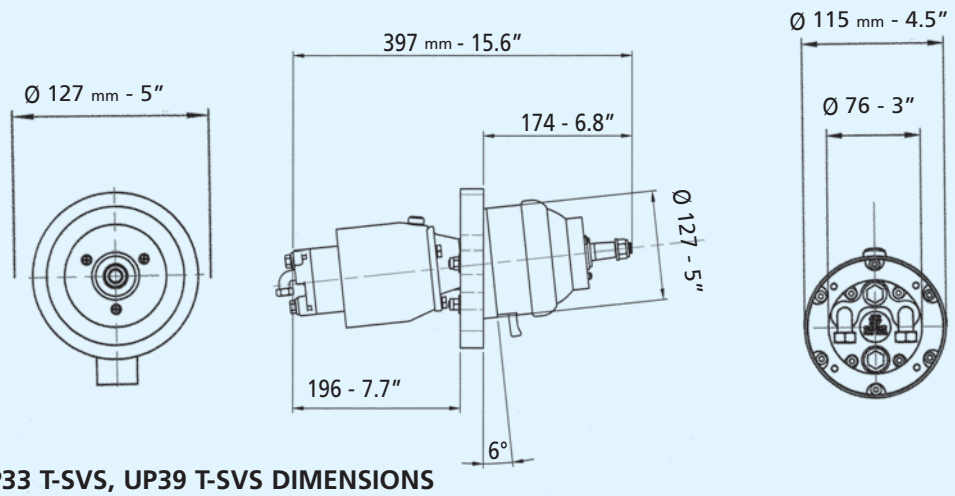

UP28 T-SVS, UP33 T-SVS, UP39 T-SVS DIMENSIONS



UC128-SVS FRONT MOUNT CYLINDER



UC128-SVS – Balanced: the number of turns lock-to-lock is equal port to starboard or vice-versa

Swiveling fittings for easy installation
High resistance stainless steel connection bolt (ULTRABOLT)

Depending on the applications on the outboard engines, the UC128-OBF is available in 3 versions:

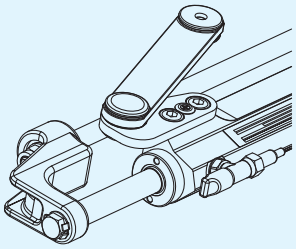

UC128/1-SVS **41281U**

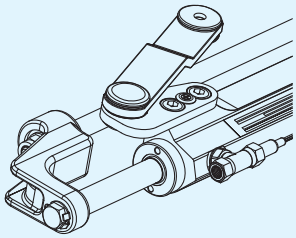

UC128/2-SVS **41282W**

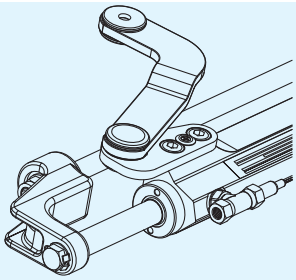

UC128/3-SVS **41283Y**

In the applications with dual UC128-SVS cylinder it is necessary to order a standard UC128-SVS cylinder (link arm attached to the starboard side of the cylinder) and a port UC128-SVS cylinder (link arm attached to the port side of the cylinder).
Depending on the applications on the outboard engines, the UC128-SVS port cylinder is available in 2 versions:



UC128P-SVS

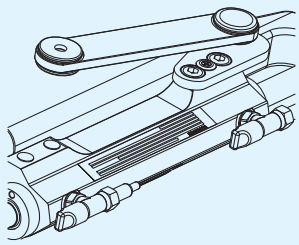

UC128P/1-SVS **41328U**

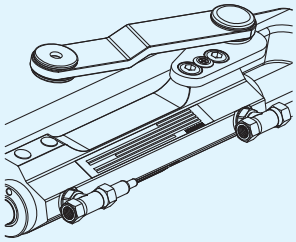

UC128P/2-SVS **41329W**

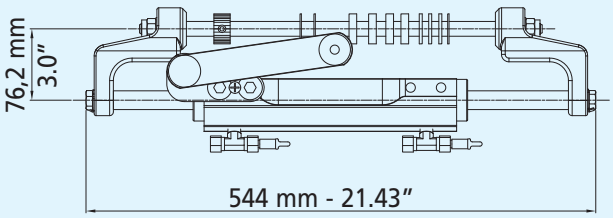

UC128-SVS, UC128P-SVS DIMENSIONS

SPECIFICATIONS	UC128/1 -/2 -/3 SVS
Volume	120 cc - 7.3 cu. in
Output force	450 kg - 992 lbs
Inside diameter	35 mm - 1.37"
Stroke	185 mm - 7.28"
3/8" (9.5mm) Fittings	For high pressure flex hose
Bleed fittings	DN5 Quick connect



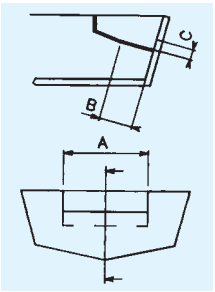

SPLASHWELL DIMENSION REQUIREMENTS			
Engine No.	**A**	**B**	**C**
1	560 mm - 22.05"	152 mm - 5.98"	152 mm - 5.98"
2	1110 mm - 43.70"	152 mm - 5.98"	152 mm - 5.98"

INNOVATIVE NEW DESIGN (PATENTED):
Split cylinder mounting rod for easy installation and bushings to prevent friction with engine tilt tube.

UC128-SVS CYLINDER APPLICATIONS

ENGINE	POWER	YEAR	CYLINDER	P. No.
Mercury® Mariner®	115-125-150 EFI 2T 225-250 EFI 2T 135-150-175 OPTIMAX 200-225-250 OPTIMAX RACING 300 OPTIMAX 250 SALTWATER EFI 4T 135-150-175-200 VERADO L4	1990-2007 2000-2007 1999-to date 1999-to date 2004-2006	UC128/1-SVS UC128/1-SVS UC128/1-SVS UC128/1-SVS UC128/1-SVS UC128/1-SVS UC128/1-SVS	41281 U 41281 U 41281 U 41281 U 41281 U 41281 U 41281 U
Evinrude®	E115-E130-E135 2T V4 E150-E175-E200 2T V6 E200 HO- E225-E250 2T V6 E250HO- E300 2T V6	1995-to date 1995-to date 1995-to date	UC128/2-SVS UC128/2-SVS UC128/2-SVS UC128/2-SVS	41282 W 41282 W 41282 W 41282 W
Yamaha®	115C-130B 2T 150F-200F-250G 2T 150 HPDI VMAX 2T 175-200-225-250-300 HPDI VMAX 2T F115-F150 EFI 4T F200-F225-F250 4T F115-F150 F200-F225-F250-F300-F350 4T	1998-2008 1996-2007 2000-2008 2000-2008 1999-2007 2002-2007 2004-to date 2006-to date	UC128/2-SVS UC128/2-SVS UC128/2-SVS UC128/2-SVS UC128/1-SVS UC128/2-SVS UC128/1-SVS UC128/2-SVS	41282 W 41282 W 41282 W 41282 W 41281 U 41282 W 41281 U 41282 W
Honda®	BF115-130 4T BF135-150 4T BF150 V-TEC 4T BF175-BF200-BF225 4T	1998-to date 2005-to date 2008-to date 2001-to date	UC128/3-SVS UC128/1-SVS UC128/1-SVS UC128/1-SVS	41283 Y 41281 U 41281 U 41281 U
Suzuki®	DF100-115-140 4T DF150-175 4T DF200-DF225-DF250-DF300	1998-to date 2006-to date	UC128/1-SVS UC128/1-SVS UC128/2-SVS	41281 U 41281 U 41282 W
Tohatsu®	115-120-140 2T 70-90-115 TLDI 4T	2004-to date 2004-to date	UC128/2-SVS UC128/1-SVS	41282 W 41281 U
Selva®	80 PORTOFINO/TIGERSHARK 2T 150 WHITE SHARK 2T 100EFI MARLIN -115 EFI NARWHAL- 150EFI KILLER WHALE 4T	1995-2008 2001-2007 2000-to date	UC128/2-SVS UC128/1-SVS UC128/2-SVS	41281 U 41282 W 41281 U
Johnson®	BJ90-115-140 4T J90-115 V4 2T J150-175 V6 2T J200-225 V6 4T	2001-2007 1995-2007 1995-2007 2004-2007	UC128/1-SVS UC128/2-SVS UC128/2-SVS UC128/2-SVS	41281 U 41282 W 41282 W 41282 W

WARNING
These recommendations should be used as a general reference only. Final selection should be made with the assistance of a qualified installation technician.
For any further information please contact our Technical Service.



SYSTEM	APPLICATION	WHEEL TURNS	COMPONENTS	MODEL	Qty
Single Engine Single Cylinder 	Up to 350 hp max	4,3 (UP28) 3,6 (UP33)	Cylinder Helm pump Hose Kit Oil Steering wheel	UC128-SVS UP28 or UP33-SVS KIT OB-SVS OIL 15 (page 71 - 86)	1 1 1 2 1
For a second station add: **1 UP28-SVS or UP33-SVS helm pump, 1 KIT OB-2S fitting kit, 1 KIT OB-SVS, 1 OIL 15, 1 steering wheel**					
Dual engine Single cylinder 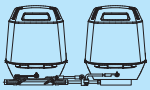	Up to 350 hp max (non-counter rotating engine) Up to 600 hp max (counter rotating engine)	4,3 (UP28) 3,6 (UP33)	Cylinder Helm pump Hose Kit Oil Tie bar Steering wheel	UC128-SVS UP28 or UP33-SVS KIT OB-SVS OIL 15 A94 (page 71 - 86)	1 1 1 2 1 1
For a second station add: **1 UP28-SVS or UP33-SVS helm pump, 1 KIT OB-2S fitting kit, 1 KIT OB-SVS, 1 l OIL 15, 1 steering wheel**					
Dual engine Dual cylinder 	Up to 600 hp max (non-counter rotating engines) Up to 700 hp max (counter rotating engines)	6,1 (UP39)	Cylinder Cylinder Port Helm pump Hose Kit Oil Tie bar Steering wheel Connection Kit	UC128-SVS UC128P-SVS UP39-SVS KIT OB-SVS OIL 15 A90 (page 71 - 86) KIT OB-2C-SVS	1 1 1 2 3 1 1 1
For a second station add: **1 UP39-SVS helm pump, 1 KIT OB-2S fitting kit, 1 KIT OB-SVS, 2 T fittings 39502 V, 1 OIL 15, 1 steering wheel**					

WARNING
The UC128-SVS front mount cylinder is not recommended for use in installations where the boat speed exceeds **50 mph (50 knots)**; (60 mph (60 knots) in dual engine, dual cylinder and counter rotating engines application).
Not intended for use in racing application.

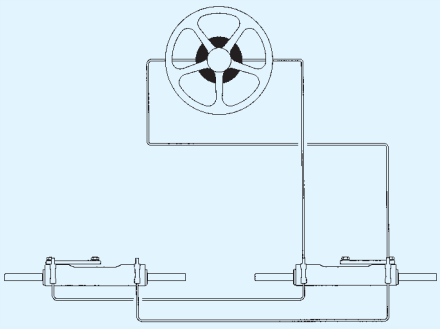

Dual engine dual cylinder application diagram

ATTENTION:
The SilverSteer™ helm pumps are always to be installed in conjunction with the UC128-SVS cylinder and the Kevlar reinforced hose kit KIT OB-SVS.

NOTE:
Three outboard engine applications are available with UC128-SVS cylinder. For any further and detailed information, please contact our Technical Service.





SILVERSTEER™

HIGH PERFORMANCE OUTBOARD STEERING SYSTEMS PACKAGED IN A BOX

SVS-28 WHEEL TURNS: 4,3

SilverSteer™ SVS-28 package kit contains:

UP28 F-SVS Front mount helm pump
UC128-SVS Front mount outboard cylinder. Specify engine type when ordering.
OIL 15 Hydraulic oil 2 litres (0.5 gallons).
KIT OB-SVS Hose kit with preassembled fittings. Specify engine type when ordering.

The wheel is not included.

SVS-33 WHEEL TURNS: 3,6

SilverSteer™ SVS-33 package kit contains:

UP33 F-SVS Front mount helm pump
UC128-SVS Front mount outboard cylinder. Specify engine type when *ordering.*
OIL 15 Hydraulic oil 2 litres (0.5 gallons).
KIT OB-SVS Hose kit with preassembled fittings. Specify engine type when ordering.

The wheel is not included.



SVS-39 WHEEL TURNS: 6,1

SilverSteer™ SVS-39 package kit contains:

UP39 F-SVS Front mount helm pump
UC128-SVS Front mount outboard cylinder. Specify engine type when ordering
OIL 15 Hydraulic oil 2 litres (0.5 gallons).
KIT OB-SVS Hose kit with preassembled fittings. Specify length required when ordering.

The wheel is not included.

KIT OB-SVS:

KHOSE KIT FOR SINGLE STATION INSTALLATION

It consists of a pair of high pressure Kevlar stranded flexible hoses supplied with preassembled stainless steel fittings. The fittings are complete with turning nuts and the hoses have reinforcing sleeves on both ends.
Note: KIT OB-SVS is also available with the R5 bulkhead kit preassembled on hose ends.

KIT OB-SVS	LENGTH	P. No.
KIT OB-SVS-30	3,00 m - 9.8 ft	41286 E
KIT OB-SVS-35	3,50 m - 11.5 ft	41287 G
KIT OB-SVS-40	4,00 m - 13.2 ft	41288 J
KIT OB-SVS-45	4,50 m - 14.8 ft	41289 L
KIT OB-SVS-50	5,00 m - 16.4 ft	41290 V
KIT OB-SVS-55	5,50 m - 18.0 ft	41291 X
KIT OB-SVS-60	6,00 m - 19.7 ft	41292 Z
KIT OB-SVS-65	6,50 m - 21.3 ft	41293 B
KIT OB-SVS-70	7,00 m - 22.9 ft	41294 D
KIT OB-SVS-75	7,50 m - 24.6 ft	41295 F
KIT OB-SVS-80	8,00 m - 26.3 ft	41296 H
KIT OB-SVS-85	8,50 m - 27.8 ft	41297 K
KIT OB-SVS-90	9,00 m - 29.5 ft	41298 M

KIT OB/R5-SVS	LENGTH	P. No.
KIT OB/R5-SVS-30	3,00 m - 9.8 ft	41312 C
KIT OB/R5-SVS-35	3,50 m - 11.5 ft	41313 E
KIT OB/R5-SVS-40	4,00 m - 13.2 ft	41314 G
KIT OB/R5-SVS-45	4,50 m - 14.8 ft	41315 J
KIT OB/R5-SVS-50	5,00 m - 16.4 ft	41316 L
KIT OB/R5-SVS-55	5,50 m - 18.0 ft	41317 N
KIT OB/R5-SVS-60	6,00 m - 19.7 ft	41318 R
KIT OB/R5-SVS-65	6,50 m - 21.3 ft	41319 T
KIT OB/R5-SVS-70	7,00 m - 22.9 ft	41320 B
KIT OB/R5-SVS-75	7,50 m - 24.6 ft	41321 D
KIT OB/R5-SVS-80	8,00 m - 26.3 ft	41322 F
KIT OB/R5-SVS-85	8,50 m - 27.8 ft	41323 H
KIT OB/R5-SVS-90	9,00 m - 29.5 ft	41324 K

WARNING: The SilverSteer™ helm pumps have always to be installed in conjunction with the UC128-SVS cylinder and the Kevlar reinforced hose kit KIT OB-SVS.

A94
TIE BAR FOR TWIN OUTBOARD ENGINES WITH UC128-OBF or UC128-SVS CYLINDERS

A94 - 41204Z

- Suitable for applications with single UC128-OBF (or UC128-SVS) front mount cylinder
  NOTE: In the applications with dual cylinder use **A90** tie bar
- Allows to tilt the engines independently
- Stainless steel components
- Adjustable from 660 mm (26”) to 950 mm (37.4”) engine centers

ATTENTION: As the tiller arm position varies from engine to engine and the distance between two engines is not predictable, unexpected interferences may occur while tilting. A duly check of the tie bar installation is then strongly recommended. Should you need additional information, please do not hesitate to refer to our Technical Service.

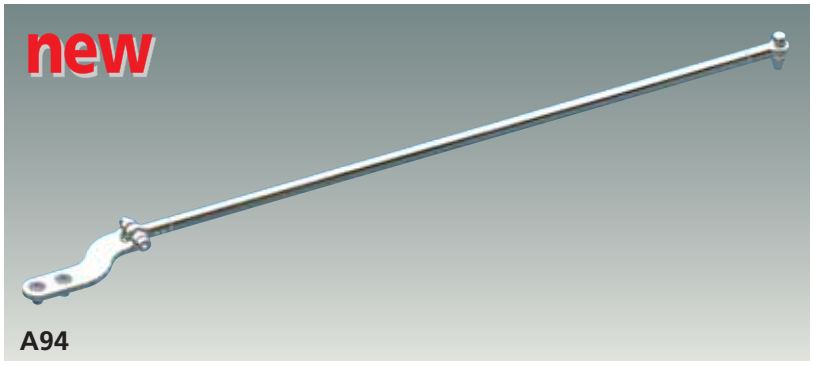

A94

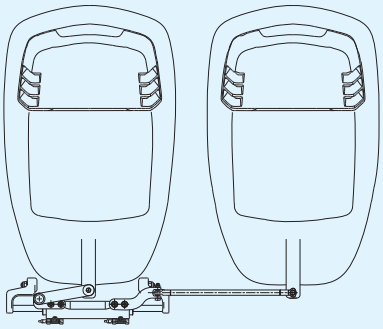

A94 application example

A94 TIE BAR APPLICATIONS

WARNING
These recommendations should be used as a general reference only. For any further information please contact our Technical Service.

ENGINE	POWER
Mercury®	135-150-175 Optimax 2T 200-225 Optimax 2T 250 PRO XS 135-150-175 Verado 4T 200 Verado 4T
Honda®	115-135-150 OHC BF 200 SOHC BF 225 A6
Yamaha®	F115-150-200-225-250 4T
Evinrude®	E115-130-150-175-200 V6 E200-225-250-300
Suzuki®	DF70-80-90 4T DF100-115-140-150-175 4T DF200-250-300 DOHC 4T



A90
TIE BAR WITH UC128-OBF or UC128-SVS CYLINDERS

A90 - 40138 H

- Suitable for applications with dual UC128-OBF (or UC128-SVS) front mount cylinder
- All stainless steel

WARNING: In the applications with dual UC128-OBF (or UC128-SVS) cylinders it is necessary to order a standard UC128-OBF (or UC128-SVS) cylinder (link arm attached to the starboard side of the cylinder) and a UC128P-OBF (or UC128P-SVS) port cylinder (link arm attached to the port side of the cylinder).

UC128 starboard cylinders:
UC128-OBF/1 - 39423 Z
UC128-OBF/2 - 39966 R
UC128-OBF/3 - 39967 T
UC128/1-SVS - 41281 U
UC128/2-SVS - 41282 W
UC128/3-SVS - 41283 Y

UC128P port cylinders:
UC128P-OBF/1 - 40106 U
UC128P-OBF/2 - 40107 W
UC128P/1-SVS - 41328 U
UC128P/2-SVS - 41329 W

- Applicable to engine centers variable from 660 mm (26”) to 950 mm (37.4”).



A90

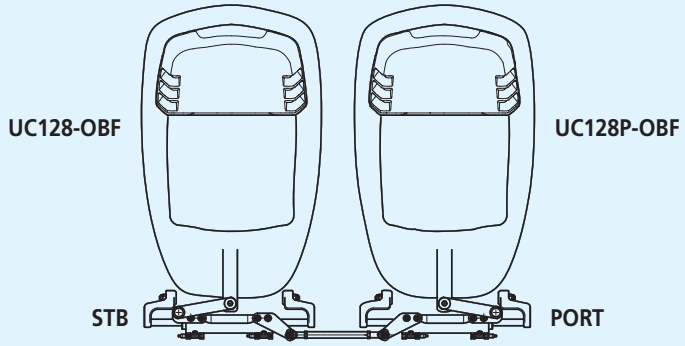

A90 application example

A88 - A92
UNIVERSAL TIE BARS

Universal tie bars suitable for all outboard applications (racing application excepted) with single or dual cylinder

A88 - 40128 E

- All stainless steel components
- Applicable to twin outboard engines using mechanical steering also
- Adjustable from 650 mm (25.6”) to 950 mm (37.4”) engine centers

WARNING: On those applications where the clearance between engine tiller arms and cowling is not sufficient fot the use of the **A88**, the **A92** tie bar is recommended

A92/700 - 40892 V
A92/950 - 40893 X

- Easily adjustable before or after installation
- All stainless steel components
- Applicable to twin outboard engines using mechanical steering also
- **A92/700:** Adjustable from 550 mm (21.6”) to 700 mm (27.5”) engine centers
- **A92/950:** Adjustable from 700 mm (27.5”) to 950 mm (37.4”) engine centers

ATTENTION: As the tiller arm position varies from engine to engine and the distance between two engines is not predictable, unexpected interferences may occur while tilting. A duly check of the tie bar installation is then strongly recommended. Should you need additional information, please do not hesitate to refer to our Technical Service.



A88

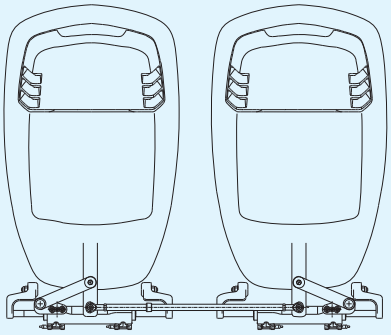

A88 or A92 application example



A92





UC133-IOB
Balanced cylinder: the number of turns lock to lock is equal port to starboard or vice-versa



UC132-OBS
Unbalanced cylinder: the number of turns lock to lock is not equal port to starboard or vice-versa

CYLINDER FOR VOLVO DP-E AND DP-G POWER ASSISTED STERNDRIVES



UC133V-IOB

SPECIFICATIONS	**UC133-IOB** - 39429 M **Balanced**	**UC132-OBS** - 39430 W **Unbalanced**	**UC133V-IOB** - 39985 V **Balanced**
Volume	132 cc - 8 cu. in	132 / 163 cc - 8 / 9.95 cu. in	132 cc - 8 cu. in
Torque	66 kgm - - 5738 lbs. in		66 kgm - - 5738 lbs. in
Output force	464 kg -1023 lbs	464 / 574 kg - 1023 / 1265 lbs	464 kg -1023 lbs
Inside diameter	32 mm - 1.25”	32 mm - 1.25”	32 mm - 1.25”
Stroke	203 mm - 8”	203 mm - 8”	203 mm - 8”
3/8” (9,5 mm) Fittings	For high pressure flex hose	For high pressure flex hose	For high pressure flex hose

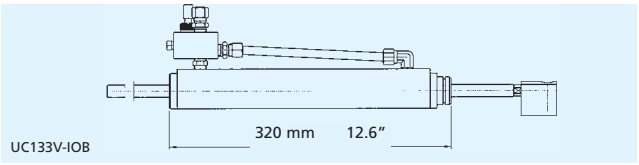

UC133V-IOB

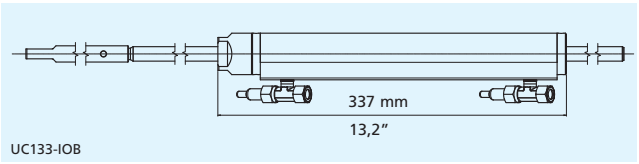

UC133-IOB

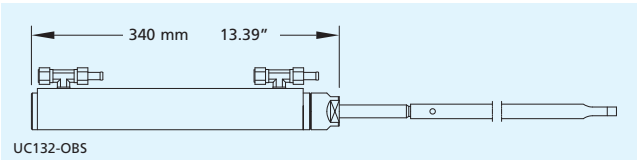

UC132-OBS



STERNDRIVE CYLINDERS

APPLICATIONS

ENGINE	YEAR	MODEL	STERNDRIVE CYLINDERS			
			non power assist engine	see notes	power assisted engine	see notes
MERCRUISER®	To date	ALPHA	UC133-IOB	1, 3	UC132-OBS	2
	To date	BRAVO ONE	UC133-IOB	1, 3	UC132-OBS	2
	To date	BRAVO TWO	UC133-IOB	1, 3	UC132-OBS	2
	To date	BRAVO THREE	UC133-IOB	1, 3	UC132-OBS	2
VOLVO®	To date	275	UC168-I		N/D	
	To date	280	UC133-IOB	1, 3, 4	UC132-OBS	2
	To date	290	UC133-IOB	1, 3, 4	UC132-OBS	2
	To date	DP-E	UC133-IOB	1, 3, 5	UC133V-IOB	
	To date	DP-G	N/A		UC133V-IOB	
	To date	DP-S	N/A		UC132-OBS	2

1. Balanced cylinder the number of turns lock to lock is equal port to starboard or vice-versa
2. Unbalanced cylinder the number of turns lock to lock is not equal port to starboard or vice-versa
3. Clearance required at the engine tube side: 21.2" (540 mm).
4. ULTRAFLEX hydraulic cylinder can be installed as an alternative to a mechanical steering system only.
5. The Volvo P. No. 872388 adaptor fitting is required for the installation.

NOTE: For applications with sterndrive engines not listed above, please contact our Technical Service.

WARNING These recommendations should be used as general reference only and they apply to factory stock sterndrives only. In doubt, contact a qualified installation technician.

ORDER GUIDE

SYSTEM 1	Turn lock to lock: Balanced 4.7 - Unbalanced 4.7/5.8 Max rudder torque: 66 kgm - 5738 lbs. in		
Components	**Model**	**Qty**	For additional station add: 1 UP28 helm pump, 1 KIT OB-2S fitting kit, 1 KIT OB hose Kit, extra OIL 15, 1 steering wheel (page 71 - 86)
Helm pump	UP28	1	
Cylinder	see application	1	
Hose Kit	KIT OB	1	
Oil	OIL 15	3	
Steering wheel	(page 71 - 86)	1	

SYSTEM 2	Turn lock to lock: Balanced 4 - Unbalanced 4/5 Max rudder torque: 66 kgm - 5738 lbs. in		
Components	**Model**	**Qty**	For additional station add: 1 UP33 helm pump, 1 KIT OB-2S fitting kit, 1 KIT OB hose Kit, extra OIL 15, 1 steering wheel (page 71 - 86)
Helm pump	UP33	1	
Cylinder	see application	1	
Hose Kit	KIT OB	1	
Oil	OIL 15	3	
Steering wheel	(page 71 - 86)	1	

NOTE: 3/8" or 10 mm diameter copper tubing can be used as an alternative tubing for plumbing the systems. For these applications a fitting kit – KIT 95 or KIT 100 – is required (page 69).

UC69-I INBOARD CYLINDER FOR HYCO-I KIT



UC69-I - Balanced: the number of turns lock-to-lock is equal port to starboard or vice-versa.

SPECIFICATIONS	UC69-I - 39782 E
Volume	69 cc - 4.2 cu. in
Torque	32 kgm - 2783 lbs. in
Output force	168 kg - 371 lbs
Inside diameter	25 mm - 0.98"
Stroke	150 mm - 5.9"
3/8" (9.5mm) Fittings	For high pressure flex hose

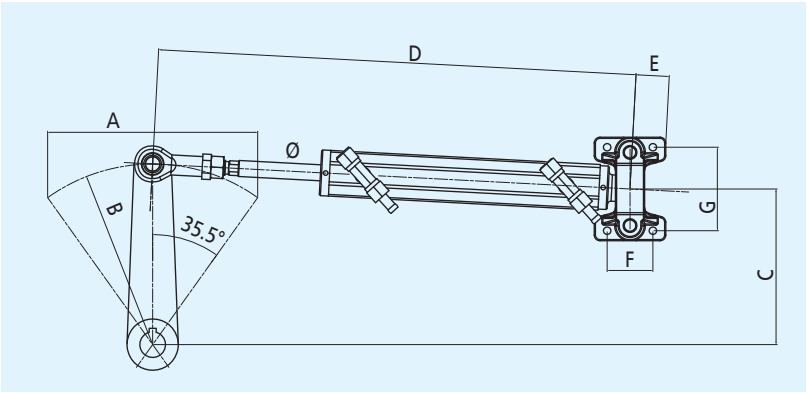

A	150 mm - 5.9"
B	129 mm - 5.11"
C	136 mm - 5.35"
D	417 mm - 16.42"
E	31,3 mm - 1.23"
F	40 mm - 1.57"
G	73 mm - 2.87"
Rod Ø	14 mm - 0.6"

INBOARD HYDRAULIC STEERING SYSTEM PACKAGED IN A BOX

HYCO-I WHEEL TURNS 3,4

HYCO-I package kit contains:

UP20 F	Front mount helm pump.
UC69-I	Inboard cylinder.
OIL 15	Hydraulic oil - 2 litres.
KIT OB	Hose kit with preassembled fittings. Specify length required when ordering.

HYCO-I not including KIT OB flexible hoses is available on request.
The wheel is not included.

WARNING: HYCO-I steering system is suitable for inboard boats up to approx. 24 - 26 ft (7,5 - 8 m) length and 25 mph max speed.



HYCO-I





UC116-I; UC168-I; UC215-I
All balanced cylinders: the number of turns lock-to-lock is equal port to starboard and vice-versa

SPECIFICATIONS	**UC116-I** - 39431 Y **Alluminum**	**UC168-I** - 39432 A **Alluminum**	**UC215-I** - 39433 C **Alluminum**
Volume	116 cc - 7 cu. in	168 cc - 10.25 cu.in	215 cc - 13.12 cu. in
Torque	58 kgm - 5043 lbs. in	87 kgm - 7565 lbs. in	111 kgm - 9652 lbs. in
Output force	464 kg - 1023 lbs	673 kg - 1483 lbs	673 kg - 1483 lbs
Inside diameter	32 mm - 1.25”	40 mm - 1.57”	40 mm - 1.57”
Stroke	178 mm - 7”	178 mm - 7”	228 mm - 9”
3/8” (9,5 mm) Fittings	For high pressure flex hose	For high pressure flex hose	For high pressure flex hose

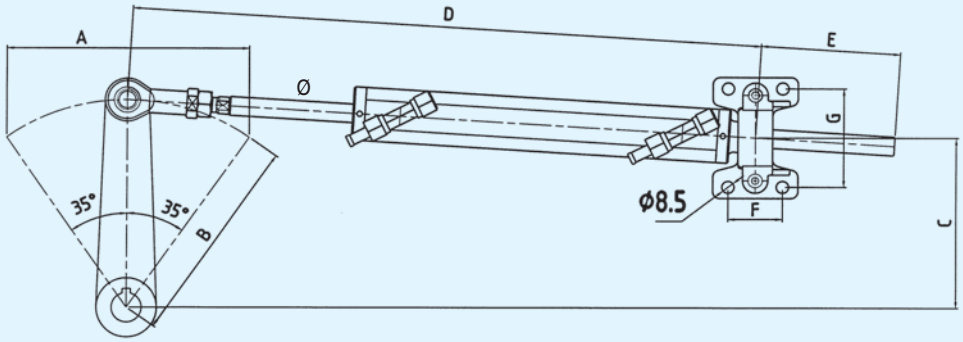

	UC116-I	UC168-I	UC215-I
A	178 mm - 7”	178 mm - 7”	228 mm - 9”
B	155 mm - 6.1”	155 mm - 6.1”	199 mm - 7.8”
C	127 mm - 5”	127 mm - 5”	163 mm - 6.4”
D	466 mm - 18.3”	512 mm - 20.1”	587 mm - 23.1”
E	102 mm - 4”	107.5 mm - 4.2”	132.5 mm - 5.2”
F	40 mm - 1.6”	40 mm - 1.6”	40 mm - 1.6”
G	73 mm - 2.9”	105 mm - 4.1”	105 mm - 4.1”
Rod Ø	14 mm - 0.6”	20 mm - 0,8”	20 mm - 0,8”



UC293-I; UC378-I
Balanced: the number of turns lock-to-lock is equal port to starboard or vice-versa.

SPECIFICATIONS	**UC293-I** - 40246 L **Brass**	**UC378-I** - 40810 P **Brass**
Volume	293 cc - 17.8 cu. in	376 cc - 22.94 cu. in
Torque	146,5 kgm - 12816 lbs. in	187,6 kgm - 16347 lbs. in
Output force	1155 kg - 2545 lbs	1155 kg - 2545 lbs
Inside diameter	50 mm - 1.97”	50 mm - 1.97”
Stroke	178 mm - 7”	228 mm - 9”
Fittings	3/8” (9,5 mm) for high pressure flex hose	for 0.5” (12 mm) copper tube (flexible connection hoses included)

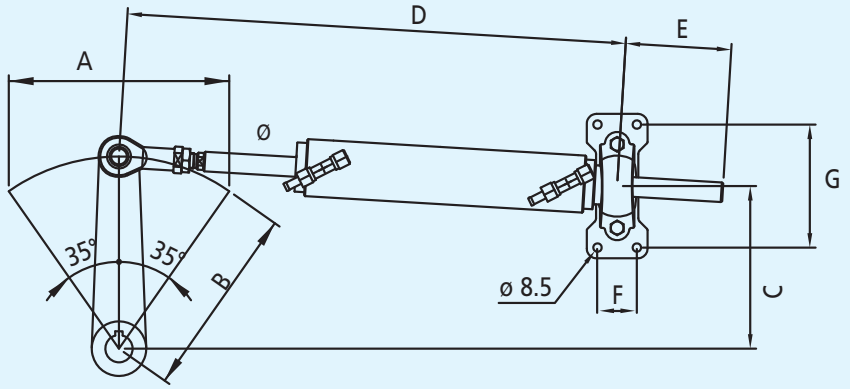

	UC293-I	UC378-I
A	178 mm - 7”	228 mm - 9”
B	163 mm - 6.4”	199 mm - 7.8”
C	134 mm - 5.2”	163 mm - 6.4”
D	506 mm - 19.9”	592 mm - 23.3”
E	107 mm - 4.2”	132,5 mm - 5.2”
F	40 mm - 1.6”	40 mm - 1.6”
G	125 mm - 4.9”	125 mm - 4.9”
Rod Ø	20 mm - 0.8”	20 mm - 0.8”



ORDER GUIDE

NOTE: With systems 1 and 2, a 3/8" nylon tubing (TU95 page 71) can be used as an alternative to the standard KIT OB hose kit for plumbing the system.
For these applications the fitting kit for the additional station is KIT95-2S.

NOTE: With systems 1, 2, 3, 4, 5 and 6, copper tubing (3/8" dia or 10 mm) can be used as an alternative tubing for plumbing the system. For these applications a fitting kit, KIT 95 or KIT 100, is required. For applications on commercial boats, the use of copper tubing is recommended.

SYSTEM 1

Turn lock to lock: 4,6 (UP25) or 4,1 (UP28)
Max rudder torque: 58 kgm (5043 lbs. in)

Components	Model	Qty	
Helm pump	UP25 oR UP28	1	For additional station add: 1 UP25 or UP28 helm pump, 1 KIT OB-2S fitting kit, 1 KIT OB hose Kit, extra OIL 15, 1 steering wheel (page 71 - 86)
Cylinder	UC116-I	1	
Hose Kit	KIT OB	1	
Oil	OIL 15	3	
Steering wheel	(pagE 71 - 86)	1	

SYSTEM 2

Turn lock to lock: 6 (UP28) or 5 (UP33)
Max rudder torque: 87 kgm (7565 lbs. in)

Components	Model	Qty	
Helm pump	UP28 or UP33	1	For additional station add: 1 UP28 or UP33 helm pump, 1 KIT OB-2S fitting kit, 1 KIT OB hose Kit, extra OIL 15, 1 steering wheel (page 71 - 86)
Cylinder	UC168-I	1	
Hose Kit	KIT OB	1	
Oil	OIL 15	3	
Steering wheel	(page 71 - 86)	1	

SYSTEM 3

Turn lock to lock: 6,5 (UP33) or 5,5 (UP39)
Max rudder torque: 87 kgm (7565 lbs. in)

Components	Model	Qty	
Helm pump	UP33 or UP39	1	For additional station add: 1 UP33 or UP39 helm pump, 1 KIT OB-2S fitting kit, 1 KIT OB hose Kit, extra OIL 15, 1 steering wheel (page 71 - 86)
Cylinder	UC215-I	1	
Hose Kit	KIT OB	1	
Oil	OIL 15	3	
Steering wheel	(page 71 - 86)	1	

SYSTEM 4

Turn lock to lock: 7,5 (UP39) or 6,5 (UP45)
Max rudder torque: 111 kgm (9652 lbs. in)

Components	Model	Qty	
Helm pump	UP39 or UP45	1	For additional station add: 1 UP39 or UP45 helm pump, 1 KIT OB-2S fitting kit, 1 KIT OB hose Kit, extra OIL 15, 1 steering wheel (page 71 - 86)
Cylinder	UC293-I	1	
Hose Kit	KIT OB	1	
Oil	OIL 15	3	
Steering wheel	(page 71 - 86)	1	

SYSTEM 5

Turn lock to lock: 8,4
Max rudder torque: 187,6 kgm (16347 lbs. in)

Components	Model	Qty	
Helm pump	UP45-I R	1	For additional station add: 1 UP45-I R helm pump, 1 KIT 120-2S fitting kit, extra OIL 15, 1 steering wheel (page 71 - 86)
Cylinder	UC378 I	1	
Oil	OIL 15	3	
Steering wheel	(page 71 - 86)	1	

BULKHEAD HOSE KITS

R5 - BULKHEAD STRAIN RELIEF HOSE KIT

R5 kit distributes strain from bends in hose. It features a water tight gripper fitting and a bulkhead fitting flange for hose protection.
R5 - 39510 U


R5

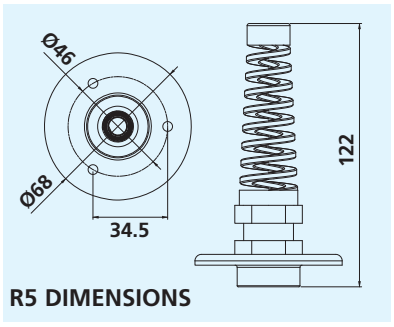

R5 DIMENSIONS

R7 - 3/4" BULKHEAD FITTING KIT

3/4" bulkhead fitting kit for single cylinder installation. 2 assemblies as illustrated per kit.
R7 - 40819 J


R7 KIT

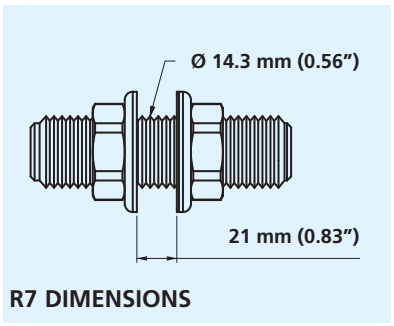

R7 DIMENSIONS

R8 - DUAL THRU-HULL HOSE KIT

Connection flange available in three different colours
R8B - Black 41299 P
R8W - White 41300 V
R8CH - Chrome 41301 X


R8B


R8W


R8CH

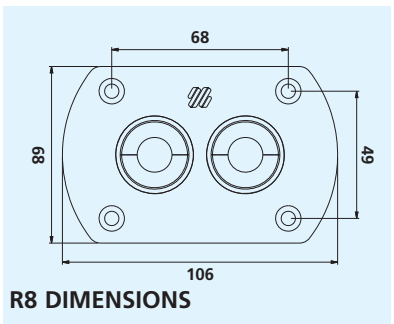

R8 DIMENSIONS

R9 - BULKHEAD KIT FOR DUAL HOSE WITH PREASSEMBLED FITTINGS

Connection flange available in three different colours
R9B - Black 41302 Z
R9W - White 41303 B
R9CH - Chrome 41304 D


R9B


R9W


R9CH

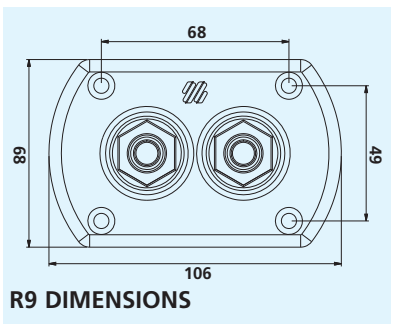

R9 DIMENSIONS



HIGH PRESSURE FLEXIBLE HOSES

KIT OB: HOSE KIT FOR SINGLE STATION INSTALLATION

It consists of a pair of high pressure flexible hoses supplied with preassembled fittings. The fittings are complete with turning nuts and the hoses have reinforcing sleeves on both ends.
Available lengths: from 3,00 m (9.8 ft) to 9,00 m (29.5 ft) with 0,5 m (1.6 ft) increments.



KIT OB

KIT OB/R5: HOSE KIT FOR SINGLE STATION INSTALLATION

It consists of a pair of high pressure flexible hoses supplied with preassembled fittings and R5 bulkhead kit. The fittings are complete with turning nuts and the hoses have reinforcing sleeves on both ends.
Available lengths: from 3,00 m (9.8 ft) to 9,00 m (29.5 ft) with 0,5 m (1.6 ft) increments.



KIT OB/R5

KIT OB	LENGTH	PART No.
KIT OB-30	3,00 m - 9.8 ft	40852 G
KIT OB-35	3,50 m - 11.5 ft	40853 J
KIT OB-40	4,00 m - 13.2 ft	40752 C
KIT OB-45	4,50 m - 14.8 ft	40753 E
KIT OB-50	5,00 m - 16.4 ft	40754 G
KIT OB-55	5,50 m - 18.0 ft	40755 J
KIT OB-60	6,00 m - 19.7 ft	40749 P
KIT OB-65	6,50 m - 21.3 ft	40648 H
KIT OB-70	7,00 m - 22.9 ft	40796 Z
KIT OB-75	7,50 m - 24.6 ft	40854 L
KIT OB-80	8,00 m - 26.3 ft	40855 N
KIT OB-85	8,50 m - 27.8 ft	40856 R
KIT OB-90	9,00 m - 29.5 ft	40857 T

KIT OB/R5	LENGTH	PART No.
KIT OB/R5-30	3,00 m - 9.8 ft	40835 G
KIT OB/R5-35	3,50 m - 11.5 ft	40836 J
KIT OB/R5-40	4,00 m - 13.2 ft	40837 L
KIT OB/R5-45	4,50 m - 14.8 ft	40838 N
KIT OB/R5-50	5,00 m - 16.4 ft	40839 R
KIT OB/R5-55	5,50 m - 18.0 ft	40840 Z
KIT OB/R5-60	6,00 m - 19.7 ft	40841 B
KIT OB/R5-65	6,50 m - 21.3 ft	40842 D
KIT OB/R5-70	7,00 m - 22.9 ft	40843 F
KIT OB/R5-75	7,50 m - 24.6 ft	40844 H
KIT OB/R5-80	8,00 m - 26.3 ft	40845 K
KIT OB/R5-85	8,50 m - 27.8 ft	40846 M
KIT OB/R5-90	9,00 m - 29.5 ft	40847 P

KIT OB/M: HOSE KIT WITH PREASSEMBLED FITTINGS AT ONE END SINGLE STATION APPLICATION

It consist of a pair of ligh pressure flexible hose with fittings featuring turning nuts preassembled at one end only.
It is supplied with 2 non assembled fittings and 2 reinforcing sleeves.
Available on 6 m (1.8") and 9 m (2.7') standard lenghts that can be cut to fit the desired application.

KIT OB/M	LENGTH	PART No.
KIT OB/M-60	6,00 m - 19.7 ft	41708 E
KIT OB/M-90	9,00 m - 29.5 ft	41709 G



KIT OB/M

KIT OB-2S: FITTING FOR A SECOND STEERING STATION OR AUTOPILOT INSTALLATION

It includes all necessary fittings and 8 m (26.3 ft) of 3/8" dia. nylon tube for the compensating line

KIT OB-2S - 39539 V



KIT OB-2S

KIT OB-2C: DUAL CYLINDER/DUAL ENGINE CONNECTION KIT

It consists of a pair of high pressure flexible hoses complete with preassembled fittings and reinforcing sleeves.
Three lengths available: 70 cm, 90 cm, 120 cm

KIT OB-2C	LENGTH	PART No.
KIT OB-2C-07	0,7 m - 2.30 ft	41149 U
KIT OB-2C-09	0,9 m - 2.95 ft	40680 D
KIT OB-2C-12	1,20 m - 3.95 ft	40686 S


KIT OB-2C

KIT OB-2C-SVS: DUAL CYLINDER/DUAL ENGINE CONNECTION KIT FOR SilverSteer™ SYSTEMS

It consist of pair of high pressure Kevlar Standed flexible hoses complete with preassembled fitting and reinforcing sleeves.
Three lengths available: 70 cm, 90 cm and 120 cm.

KIT OB-2C-SVS	LENGTH	PART No.
KIT OB-2C-SVS-07	0,7 m - 2.30 ft	41705 Y
KIT OB-2C-SVS-09	0,9 m - 2.95 ft	41706 A
KIT OB-2C-SVS-12	1,20 m - 3.95 ft	41707 C


KIT OB-2C-SVS

TU5/16: 5/16" nylon tubing recommended for outboard engines applications with (TU 5/16)

OB-F5/16: 40849 U Fitting featuring turning nut for use with 5/16" hydraulic hose and connection for 3/8" fitting

TU95: 3/8" nylon tubing. It is not recommended in the applications where the total tubing run exceeds 50 ft (15 m).

KIT 95 - 39516 G: 3/8" copper tube fitting kit. It includes two 1.6 ft (0,5 m) nylon tubes and all necessary fittings for a single station..

KIT 100 - 39517 J: 10 mm copper tube fitting kit. It includes 1.6 ft (0,5 m) nylon tubes and all necessary fittings for a single station

KIT 95-2S - 39518 L: Fitting kit for a second steering station or for an autopilot installation. It includes all necessary fittings for 3/8" nylon or copper tube.

KIT 100-2S - 39519 N: Fitting kit for a second steering station or for an autopilot installation. It includes all necessary fittings for 10 mm nylon or copper tube.

KIT 120-2S - 40821 V: Fitting kit for a second steering station or for an autopilot installation.
It includes all necessary fittings for 12 mm copper tube.


KIT 95-KIT 100


KIT 95-2S - KIT 100-2S - KIT 120-2S



ACCESSORIES

BP 95 - 39520 X:
By-pass for 3/8" nylon tube.

OIL 15 - 70704 K:
Sold in 1 litre (0.26 gallons) container

- Hydraulic oil: IS0 VG 15
- Viscosity: 15 cst a 40 °C
- Viscosity index: <100
- Solidification point: <- 30 °C

KIT F - 39664 Y:
Remote fill adapter for rear mount and tilt mount pumps.


BP 95



OIL 15


KIT F

FITTINGS

61BCA - 71004 K: 3/8" (9,5 mm) nut and sleeve assembly, brass

61CA - 71013 L: 3/8" (9,5 mm) nut and sleeve assembly, nickel plated

AF45 - 41284 A: 45° adjustable fitting, helm and tube. Suitable for SilverSteer™ system **only**.

SF38 - 39471 L: 3/8" (9,5 mm) connector fitting, helm and tube

SF12 - 41306 H: straight fitting, helm and tube Ø 12 mm

EF38 - 39472 N: 3/8" (9,5 mm) elbow fitting, helm and tube

TF38 - 39502 V: 3/8" (9,5 mm) union T for tube

VF38 - 39503 X: 3/8" (9,5 mm) bleed T for cylinder, brass

VFN38 - 39925 A: 3/8" (9,5 mm) bleed T for cylinder, nickel plated

VFNO38 - 40868 Y: 3/8" (9,5 mm) adjustable bleed T for cylinder, nickel plated

QCFN - 41307 K: quick connect bleed T for cylinder, nickel plated

QCFN94 - 41308 M: quick connect bleed T for UC94-OBF cylinder, nickel plated

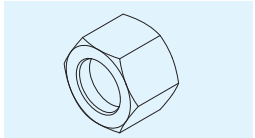
61BCA - 61CA

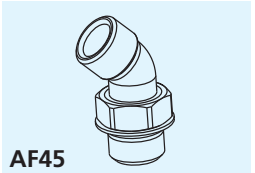
AF45

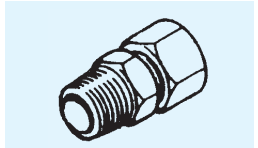
SF38

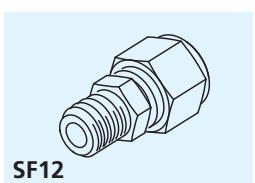
SF12

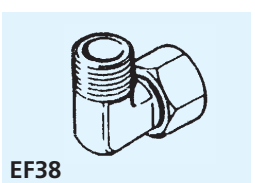
EF38

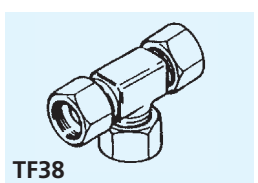
TF38

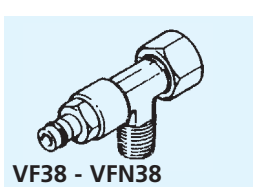
VF38 - VFN38

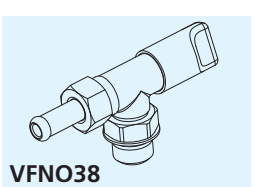
VFNO38

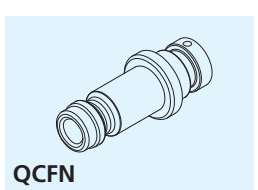
QCFN


QCFN94





STEERING WHEELS

All ULTRAFLEX steering wheels meet the EEC directive 94/25 requirements about pleasure boats. All steering wheels are CE marked in conformity with the EN 28848 – EN 29775 and ABYC P22 safety standards

- Thermoplastic antishock material
- Standard 3/4" taper
- Hub included
- Meet with the EN 28848 and ABYC P22 standards

HARD TOUCH GRIP

V32 - 35458 X Black
V32W - 35509 R White
V32G - 39282 H Grey
V33 - 35819 L Black
V33W - 35817 H White
V33G - 37495 J Grey

SOFT TOUCH GRIP REDUCED DIMENSION:

V45 - 37920 H Black
V45W - 38049 P White
V45G - 39291 J Grey



V32 Ø 335 mm (13.2")



V32W Ø 335 mm (13.2")



V32G Ø 335 mm (13.2")



V33 Ø 342 mm (13.2")



V33W Ø 342 mm (13.2")



V33G Ø 342 mm (13.2")



V45 Ø 280 mm (13.2")



V45W Ø 280 mm (13.2")



V45G Ø 280 mm (13.2")

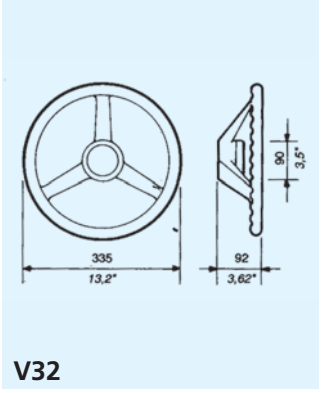

V32

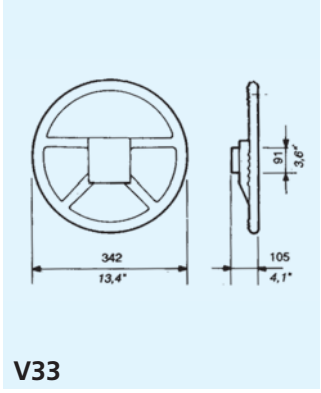

V33

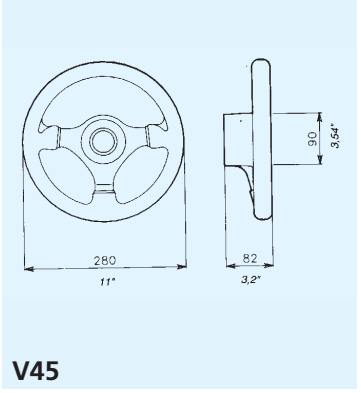

V45

CE

STEERING WHEELS

All ULTRAFLEX steering wheels meet the EEC directive 94/25 requirements about pleasure boats.
All steering wheels are CE marked in conformity with the EN 28848 – EN 29775 and ABYC P22 safety standards

- Thermoplastic antishock material
- Standard 3/4" taper
- Hub included
- Meet with the EN 28848 and ABYC P22 standards

SOFT TOUCH GRIP

V38	- 36517 Q
V38W	- 37373 T
V38G/W	- 37387 G
V38G/B	- 37515 P
V40	- 37374 U
V40G	- 37376 W



V38 Black grip - Black spokes
Ø 350 mm (13.8")



V38W White grip - White spokes
Ø 350 mm (13.8")



V38G/W Grey grip - White spokes
Ø 350 mm (13.8")



V38G/B Grey grip - Black spokes
Ø 350 mm (13.8")



V40 Black - Center pad - Ø 350 mm (13.8")



V40G Grey - Center pad - Ø 350 mm (13.8")

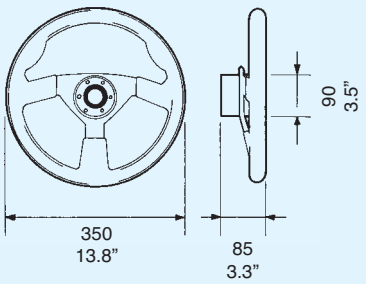

V38

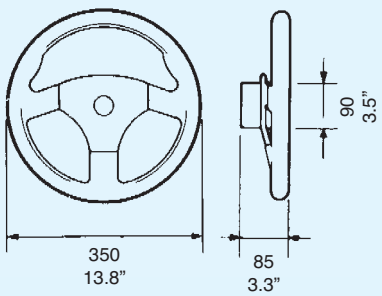

V40

CE



ANTIGUA STEERING WHEELS

All ULTRAFLEX steering wheels meet the EEC directive 94/25 requirements about pleasure boats.
All steering wheels are CE marked in conformity with the EN 28848 – EN 29775 and ABYC P22 safety standards

- Thermoplastic antishock material
- Standard 3/4" taper
- Hub included
- Meet with the EN 28848 and ABYC P22 standards

SOFT TOUCH GRIP

V60B	- 39189 U
V60W	- 39190 C
V60G	- 39274 J
V60 brc	- 39289 Y

WOOD LOOK OR PAINTED GRIP

V61BR	- 39191 E
V61S/B	- 39277 R

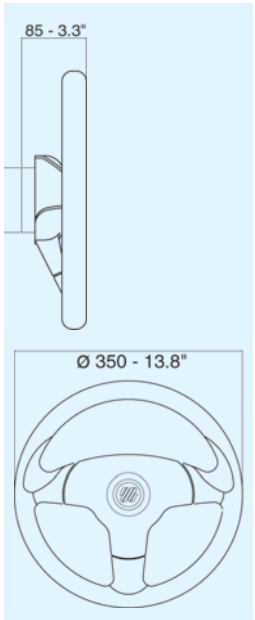

V60 e V61



V60B Black grip - Black spokes
Ø 350 mm (13.8")



V60W White grip - White spokes
Ø 350 mm (13.8")



V60G Grey grip - Grey spokes
Ø 350 mm (13.8")



V60 brc Black grip - Black spokes
Burl wood cap - Ø 350 mm (13.8")



V61BR Burl wood grip - Black spokes
Ø 350 mm (13.8")



V61S/B Silver painted grip - Black spokes
Ø 350 mm (13.8")



All Antigua steering wheels are provided with an exclusive hub that easily allows the steering wheel to always be aligned properly.

CORSICA STEERING WHEELS

All ULTRAFLEX steering wheels meet the EEC directive 94/25 requirements about pleasure boats.
All steering wheels are CE marked in conformity with the EN 28848 – EN 29775 and ABYC P22 safety standards

- Standard 3/4" taper
- Meet with the EN 28848 and ABYC P22 standards
- **X63** - 40119 D hub with button (to be ordered separately)

SOFT TOUCH GRIP

CORSICA B/S - 38333 O
CORSICA B/B - 38332 N
CORSICA W/S - 38334 P
CORSICA G/S - 38393 H
CORSICA B brc - 38163 O
CORSICA W brc - 39968 V

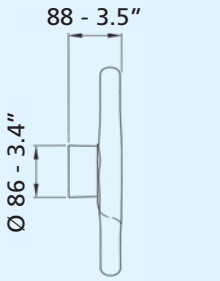

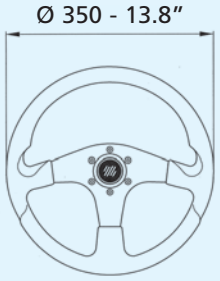

CORSICA



CORSICA B/S Black grip - Silver spokes
Ø 350 mm (13.8")



CORSICA B/B Black grip - Black spokes
Ø 350 mm (13.8")



CORSICA W/S White grip - Silver spokes
Ø 350 mm (13.8")



CORSICA G/S Grey grip - Silver spokes
Ø 350 mm (13.8")



CORSICA S/S Silver painted grip
Silver spokes - Ø 350 mm (13.8")



CORSICA CB/B Carbon grip
Black spokes - Ø 350 mm (13.8")



CORSICA BR/B Burl wood grip
Black spokes - Ø 350 mm (13.8")



CORSICA BR/S Burl wood grip
Silver spokes - Ø 350 mm (13.8")



NISIDA, SANTORINI, SPARGI, BURANO, MARETTIMO STEERING WHEELS

All UFLEX steering wheels meet the EEC directive 94/25 requirements about pleasure boats.
All steering wheels are CE marked in conformity with the EN 28848 – EN 29775 and ABYC P22 safety standards

- Standard 3/4" taper
- Meet with the EN 28848 and ABYC P22 standards
- **X63** - 40119 D hub with button (to be ordered separately)

POLYURETHANE GRIP

NISIDA B/B	- 61812M
NISIDA B/S	- 61813 P

BLACK SOFT TOUCH GRIP WITH INSERTS

SANTORINI B/S	- 65995 W
BURANO S/S	- 63725 D
SPARGI S/S	- 61984 U
SPARGI BR/B	- 61814 S
MARETTIMO B/S	- 64304 H
MARETTIMO B/P	- 64303 F



NISIDA B/B Black grip - Black spokes Ø 350 mm (13.8")



NISIDA B/S Black grip - Silver spokes Ø 350 mm (13.8")

new



SANTORINI B/S Silver inserts - Silver spokes - Ø 350 mm (13.8")



BURANO S/S Silver painted inserts Silver spokes - Ø 350 mm (13.8")



SPARGI S/S Silver inserts - Silver spokes - Ø 350 mm (13.8")



SPARGI BR/B Burl wood inserts Black spokes - Ø 350 mm (13.8")



MARETTIMO B/S Black grip Silver spokes - Ø 350 mm (13.8")



MARETTIMO B/P Black grip Polished spokes - Ø 350 mm (13.8")

CE

PONZA, LINOSA, VIVARA STEERING WHEELS

All UFLEX steering wheels meet the EEC directive 94/25 requirements about pleasure boats.
All steering wheels are CE marked in conformity with the EN 28848 – EN 29775 and ABYC P22 safety standards

- Standard 3/4" taper
- Meet with the EN 28848 and ABYC P22 standards
- **X63** - 40119 D hub with button (to be ordered separately)

SILVER GRIP OR WITH INSERTS

PONZA S/S	- 61816 W
PONZA S/P	- 64294 H
LINOSA S/S	- 64295 K
LINOSA BR/B	- 64296 M
LINOSA S/P	- 65274 G

BLACK SOFT TOUCH GRIP WITH CHROME INSERTS

VIVARA CH/P	- 64643 G
VIVARA CH/B	- 64644 J



PONZA S/S Silver painted grip
Silver spokes - Ø 350 mm (13.8")



PONZA S/P Silver painted grip
Polished spokes Ø 350 mm (13.8")



LINOSA S/S Silver inserts
Silver spokes - Ø 350 mm (13.8")



LINOSA BR/B Burl wood inserts
Black spokes – Ø 350 mm (13.8")



LINOSA S/P Silver inserts
Polished spokes Ø 350 mm (13.8")



VIVARA CH/P Chrome inserts
Polished spokes - Ø 350 mm (13.8")



VIVARA CH/B Chrome inserts - Black spokes
Chrome center ring - Ø 350 mm (13.8")



X63



PALMARIA, BUDELLI, TAVOLARA, LAVEZZI STEERING WHEELS

All UFLEX steering wheels meet the EEC directive 94/25 requirements about pleasure boats.
All steering wheels are CE marked in conformity with the EN 28848 – EN 29775 and ABYC P22 safety standards

- Standard 3/4" taper
- Meet with the EN 28848 and ABYC P22 standards
- **X63** - 40119 D hub with button (to be ordered separately)

POLYURETHANE GRIP

PALMARIA B/B - 63727H

TAVOLARA B/S - 65277 N
LAVEZZI B/S - 65295 R

BLACK SOFT TOUCH GRIP WITH INSERTS

PALMARIA R/B - 63728K
PALMARIA BL/B - 63729M

BUDELLI CH/S - 65293 L
BUDELLI CH/P - 65294 N
BUDELLI CH/C/P - 66001 Z



PALMARIA B/B Black grip
Black spokes - Ø 350 mm (13.8")



PALMARIA R/B Red inserts
Black spokes - Ø 350 mm (13.8")



PALMARIA BL/B Blue inserts
Black spokes - Ø 350 mm (13.8")



BUDELLI CH/S Chrome inserts
Silver spokes - Ø 350 mm (13.8")



BUDELLI CH/P Chrome inserts
Polished spokes - Ø 350 mm (13.8")



TAVOLARA B/S Black grip
Silver spokes - Ø 350 mm (13.8")



BUDELLI CH/C/P Chrome inserts
Polished spokes - Ø 350 mm (13.8")



LAVEZZI B/S Black grip
Silver spokes - Ø 360 mm (14.1")

CE

WOOD WHEELS

All UFLEX steering wheels meet the EEC directive 94/25 requirements about pleasure boats.
All steering wheels are CE marked in conformity with the EN 28848 – EN 29775 and ABYC P22 safety standards

- Standard 3/4" taper
- Meet with the EN 28848 and ABYC P22 standards
- **X63** - 40119 D hub with button (to be ordered separately)

MAHOGANY GRIP

SALINA/CP	- 62685 N
SALINA	- 62799 E
LAMPEDUSA	- 62684 L
ALICUDI	- 62682 G

WOOD GRIP, REDUCED DIMENSION

CAPRI	- 62465 Y



SALINA Ø 360 mm (14.1")



LAMPEDUSA Ø 360 mm (14.1")



ALICUDI Ø 350 mm (13.8")



CAPRI Ø 320 mm (12.6")



X63

CE



NON MAGNETIC STAINLESS STEEL WHEELS

All ULTRAFLEX steering wheels meet the EEC directive 94/25 requirements about pleasure boats.
All steering wheels are CE marked in conformity with the EN 28848 – EN 29775 and ABYC P22 safety standards

- Standard 3/4" taper
- Hub included
- Meet with the EN 28848 and ABYC P22 standards

POLYURETHANE GRIP

V25B - 40640 R black
V25W - 40642 V white
V25G - 40641 T grey

MAHOGANY GRIP

V26 - 40644 Z

STAINLESS STEEL GRIP

V27 - 40643 X



V25B Ø 350 mm (13.8")



V25W Ø 350 mm (13.8")



V25G Ø 350 mm (13.8")



V26 Ø 350 mm (13.8")



V27 Ø 350 mm (13.8")

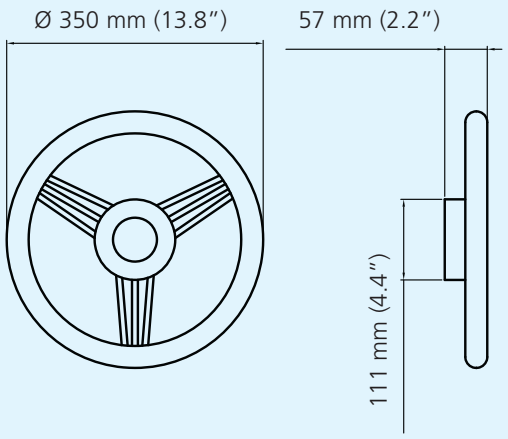

V25B - V25W - V25G - V26 - V27

CE

NON MAGNETIC STAINLESS STEEL WHEELS

All ULTRAFLEX steering wheels meet the EEC directive 94/25 requirements about pleasure boats.
All steering wheels are CE marked in conformity with the EN 28848 – EN 29775 and ABYC P22 safety standards

- Standard 3/4" taper
- Hub included
- Meet with the EN 28848 and ABYC P22 standards

POLYURETHANE GRIP

V01 - 41687 Z black
V02 - 41688 B white
V03 - 41689 D grey
V04 - 41690 M navy blue

MAHOGANY GRIP

V05 - 41691 P

STAINLESS STEEL GRIP

V06 - 41692 S



V01 Ø 350 mm (13.8")



V02 Ø 350 mm (13.8")



V03 Ø 350 mm (13.8")



V04 Ø 350 mm (13.8")



V05 Ø 350 mm (13.8")



V06 Ø 350 mm (13.8")

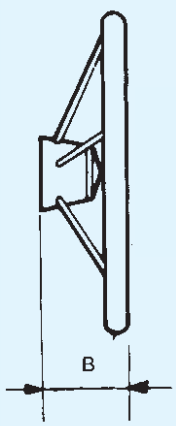

MOD.	B mm (")
V01	67 (2.6)
V02	67 (2.6)
V03	67 (2.6)
V04	67 (2.6)
V05	67 (2.6)
V06	67 (2.6)

CE



NON MAGNETIC STAINLESS STEEL WHEELS

All ULTRAFLEX steering wheels meet the EEC directive 94/25 requirements about pleasure boats.
All steering wheels are CE marked in conformity with the EN 28848 – EN 29775 and ABYC P22 safety standards

- Standard 3/4" taper
- Hub included
- Meet with the EN 28848 and ABYC P22 standards

POLYURETHANE GRIP

V10 - 41693 U black
V11 - 41694 W white
V12 - 41695 Y grey
V13 - 41696 A ochre

POLISHED TEAK GRIP

V14 - 41697 C
V15 - 41698 E

STAINLESS STEEL GRIP

V16 - 41699 G
V17 - 41700 M



V10 Ø 350 mm (13.8")



V11 Ø 350 mm (13.8")



V12 Ø 350 mm (13.8")



V13 Ø 350 mm (13.8")



V14 Ø 350 mm (13.8")
V15 Ø 400 mm (15.7")



V16 Ø 350 mm (13.8")
V17 Ø 400 mm (15.7")

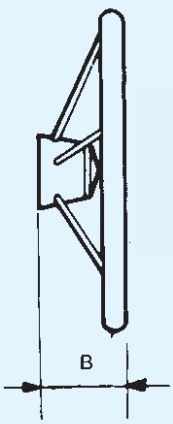

MOD.	B mm (")
V10	67 (2.6)
V11	67 (2.6)
V12	67 (2.6)
V13	67 (2.6)
V14	67 (2.6)
V15	73 (2.9)
V16	67 (2.6)
V17	73 (2.9)

CE

NON MAGNETIC STAINLESS STEEL WHEELS

All ULTRAFLEX steering wheels meet the EEC directive 94/25 requirements about pleasure boats.
All steering wheels are CE marked in conformity with the EN 28848 – EN 29775 and ABYC P22 safety standards

- Standard 3/4" taper
- Hub included
- Meet with the EN 28848 and ABYC P22 standards

STAINLESS STEEL GRIP

V23 - 32397 D
V35 - 31602 H
V65 - 39436 J

POLYURETHANE GRIP

V52B - 40631 P black
V52W - 40633 U white
V52G - 40632 S grey

V57B - 38155 O black
V57W - 38157 Q white
V57G - 38156 P grey

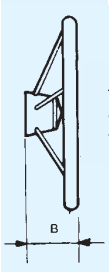

MOD.	B mm (")
V23	110 (4.3)
V35	100 (3.9)
V52	73 (2.9)
V57	76 (3.0)
V65	73 (2.9)


V35 Ø 345 mm (13.6") - V23 Ø 400 mm (15.7")


V65 Ø 370 mm (14.5")


V52B Ø 320 mm (12.6")


V52W Ø 320 mm (12.6")


V52G Ø 320 mm (12.6")


V57B Ø 350 mm (13.8")


V57W Ø 350 mm (13.8")


V57G Ø 350 mm (13.8")



NON MAGNETIC STAINLESS STEEL WHEELS

All ULTRAFLEX steering wheels meet the EEC directive 94/25 requirements about pleasure boats.
All steering wheels are CE marked in conformity with the EN 28848 – EN 29775 and ABYC P22 safety standards

- Standard 3/4" taper
- Hub included
- Meet with the EN 28848 and ABYC P22 standards

EXCLUSIVE POLYURETHANE "FIRM GRIP"

V70B - 39442 D black
V70W - 39929 J white
V70G - 39441 B grey

SPEED KNOB FOR V70 WHEELS

KNOB70 P/B - 40155 H black
blister packaged:
KNOB70 P/B-b - 40264 N

POLYURETHANE GRIP

V58G - 38650 F grey

V53B - 40634 W black
V53W - 40636 A white
V53G - 40635 Y grey

V54B - 40637 C black
V54W - 40639 G white
V54G - 40638 E grey

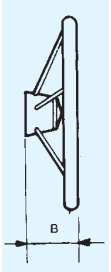

MOD.	B mm (")
V53	56 (2.2)
V54	65 (2.5)
V58	78 (3.0)
V70	90 (3.5)

CE



V70B Ø 350 mm (13.8")



V70W Ø 350 mm (13.8")



V70G Ø 350 mm (13.8")



KNOB70 P/B



V58G Ø 400 mm (15.7")



V53B Ø 450 mm (17.7") - V54B Ø 550 mm (21.6")



V53W Ø 450 mm (17.7") - V54W Ø 550 mm (21.6")



V53G Ø 450 mm (17.7") - V54G Ø 550 mm (21.6")

NON MAGNETIC STAINLESS STEEL WHEELS

All ULTRAFLEX steering wheels meet the EEC directive 94/25 requirements about pleasure boats.
All steering wheels are CE marked in conformity with the EN 28848 – EN 29775 and ABYC P22 safety standards

- Standard 3/4" taper
- Hub included
- Meet with the EN 28848 and ABYC P22 standards

MAHOGANY GRIP

V62 - 39263 D
V63 - 39264 F
V66 - 39424 B
V67 - 39425 D
KNOB67 - 40677 R
V68 - 39426 F
V74 - 41115 A
V75 - 41116 C
V76 - 41117 E

POLISHED TEAK GRIP

V71 - 41112 U
V72 - 41113 W
V73 - 41114 Y

NATURAL TEAK GRIP

V77 - 41152 G
V78 - 41153 J
V79 - 41154 L



V62 Ø 350 mm (13.8") - V68 Ø 400 mm (15.7")



V66 Ø 350 mm (13.8")



V67 Ø 400 mm (15.7") - V63 Ø 450 mm (17.7")



KNOB67
Speed knob for V63 and V67 wheels



V74 Ø 400 mm (15.7")
V75 Ø 450 mm (17.7") - V76 Ø 500 mm (19.6")



V71 Ø 400 mm (15.7")
V72 Ø 450 mm (17.7") - V73 Ø 500 mm (19.6")



V77 Ø 400 mm (15.7")
V78 Ø 450 mm (17.7") - V79 Ø 500 mm (19.6")

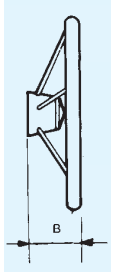

MOD.	B mm (")
V62	104 (4.1)
V63	108 (4.3)
V66	80 (3.1)
V67	100 (3.9)
V68	118 (4.6)

MOD.	B mm (")
V71	63 (2.5)
V72	63 (2.5)
V73	63 (2.5)
V74	63 (2.5)
V75	63 (2.5)
V76	63 (2.5)
V77	63 (2.5)
V78	63 (2.5)
V79	63 (2.5)

CE



NON MAGNETIC STAINLESS STEEL WHEELS

All ULTRAFLEX steering wheels meet the EEC directive 94/25 requirements about pleasure boats.
All steering wheels are CE marked in conformity with the EN 28848 – EN 29775 and ABYC P22 safety standards

- Standard 3/4" taper
- Hub included
- Meet with the EN 28848 and ABYC P22 standards

MAHOGANY GRIP

V80 - 41683 R
V81 - 41684 T

NATURAL OAK GRIP

V82 - 41685 V
V83 - 41686 X



V80 Ø 350 mm (13.8")
V81 Ø 400 mm (15.7")



V82 Ø 350 mm (13.8")
V83 Ø 400 mm (15.7")

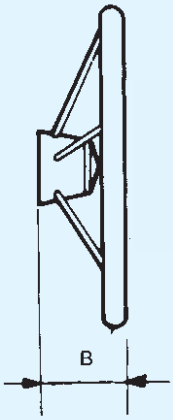

MOD.	B mm (")
V80	70 (2.8)
V81	75 (3.0)
V82	70 (2.8)
V83	75 (3.0)

CAPTAIN'S WHEELS

V89 - 40721 R

V90 - 39931 V
V91 - 39932 X
V92 - 39933 Z

V93 - 40645 B
V94 - 40646 D
KNOB93 - 40647 F



V89 Ø 500 mm

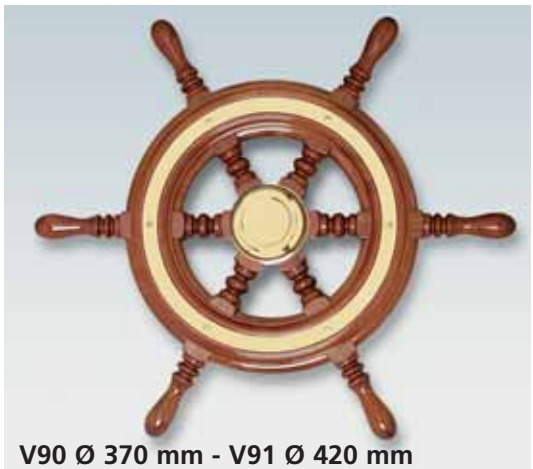

V90 Ø 370 mm - V91 Ø 420 mm
V92 Ø 490 mm



V93 Ø 460 mm - V94 Ø 550 mm



KNOB93
Folding knob for V93 and V94 wheels

CE

MECHANICAL CONTROL SYSTEMS





"LOW PROFILE" SINGLE LEVER TOP MOUNT CONTROLS



B301CR

B302CR

Single lever / dual action control to operate both with throttle and shift.
Suitable for any type of boats with outboard, inboard or I/O power plants.

FEATURES

- Compact single lever controls offering a unique low profile style compared to other controls available on the market
- Enables easy and safe shifting by preventing accidental gear engagement unless engine is idling
- Made of marine aluminum, chrome plated or powder coat finish
- Push in button disengages shift for warm-up
- Neutral safety switch **X12** - 34543 Q (optional) prevents in-gear starting
- Exceeds EN ISO 11547 standards when X12 safety switch is installed
- For use with all Ultraflex control cables except C4 (discontinued):
  - C14 and MACH14 cables require no kit
  - for C2, C8 and MACHZero cables the connection kit **K59** - 40144 C is included
  - C5, C16 and MACH5 cables require **K60** Kit - 40145 E
  - C36 and MACH36 cables require **K62** Kit - 40157 J
  - C22 cable requires **K61** Kit - 40146 G



2 X75 (OPTIONAL)



B302CR + 2 X75

MODELS

B301CR - 40140 U
Single lever control for one engine, chrome plated.

B302CR - 40141 W
Twin lever control for two engines, chrome plated.

X75 - 40662 B
Silver knob **optional**

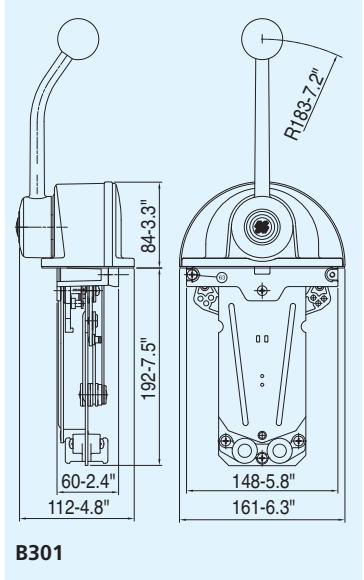

B301

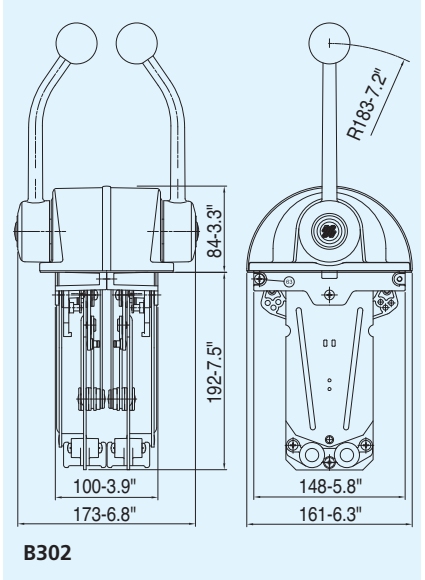

B302

"LOW PROFILE" SINGLE LEVER TOP MOUNT CONTROLS




2 X75 (OPTIONAL)


B302B + 2 X75

Single lever / dual action control to operate both with throttle and shift.
Suitable for any type of boats with outboard, inboard or I/O power plants.

FEATURES

- Compact single lever controls offering a unique low profile style compared to other controls available on the market
- Enables easy and safe shifting by preventing accidental gear engagement unless engine is idling
- Made of marine aluminum, chrome plated or powder coat finish
- Push in button disengages shift for warm-up
- Neutral safety switch **X12** - 34543 Q (optional) prevents in-gear starting
- Exceeds EN ISO 11547 standards when X12 safety switch is installed
- For use with all Ultraflex control cables except C4 (discontinued):
  - C14 and MACH14 cables require no kit
  - for C2, C8 and MACHZero cables the connection kit is **K59** - 40144 C included
  - C5, C16 and MACH5 cables require **K60** Kit - 40145 E
  - C36 and MACH36 cables require **K62** Kit - 40157 J
  - C22 cable requires **K61** Kit - 40146 G

MODELS

B301B - 40142 Y
Single lever control for one engine, black dome, chrome plated lever.

B302B - 40143 A
Twin lever control for two engines, black dome, chrome plated lever.

X75 - 40662 B
Silver knob **optional**

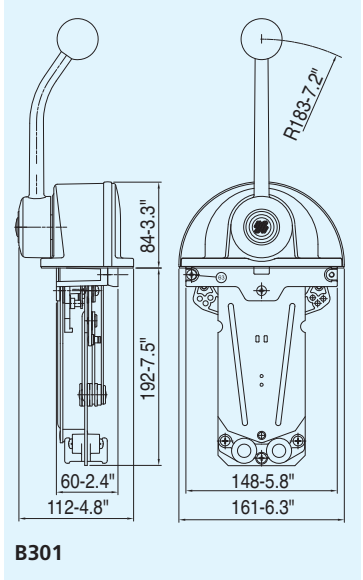

B301

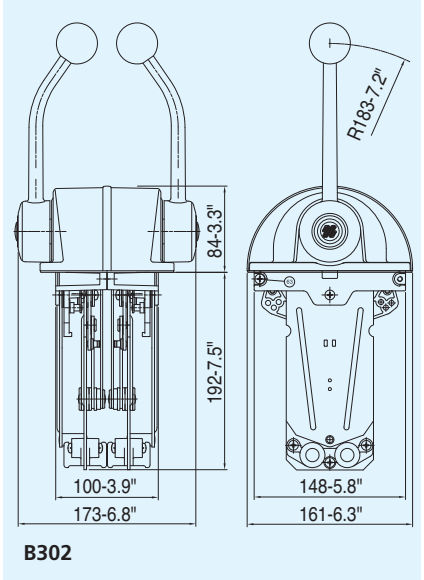

B302



SINGLE LEVER TOP MOUNT CONTROLS

Single lever / dual action control to operate both throttle and shift.
Suitable for any type of boats with outboard, inboard or I/O power plants.

FEATURES

- Enables easy and safe shifting by preventing accidental gear engagement unless engine is idling
- Made of chrome plated marine aluminum
- Pull-out handle disengages shift for warm-up
- Neutral safety switch **X43** - 38160 L (optional) prevents in-gear starting
- Exceeds EN ISO 11547 standards when X43 safety switch is installed
- For use with C2, C8 and MACHZero Ultraflex engine control cables.
- To connect C22 cable to B103 control only, use **K33** - 38378 D connection kit

MODELS

B103 - 37923 K
Single lever control for one engine

B104 - 37924 L
Twin lever control for two engines

X55 - 39421 V - Silver knob **optional**

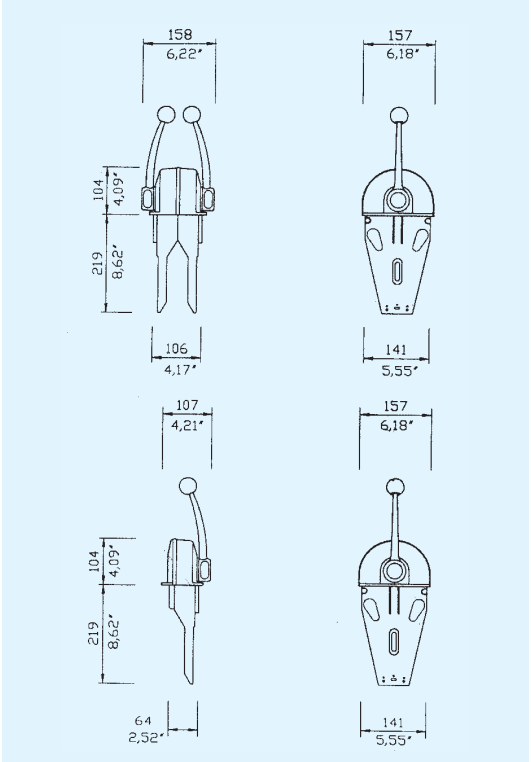



B103

B104



2 X55 (OPTIONAL)



B104 + 2 X55

SINGLE LEVER
TOP MOUNT CONTROLS





Single lever / dual action control to operate both throttle and shift.
Suitable for any type of boats with outboard, inboard or I/O power plants.

FEATURES

- Enables easy and safe shifting by preventing accidental gear engagement unless engine is idling
- Made of marine aluminum, chrome plated or powder coat finish
- Pull-out handle disengages shift for warm-up
- Neutral safety switch **X12** - 34543 Q (optional) prevents in-gear starting
- Exceeds EN ISO 11547 standards when X12 safety switch is installed
- Power trim switch conveniently located in the handle grip enables for easy tilting of the engine
- For use with all Ultraflex engine control cables except C22, C4 (discontinued), C36 and MACH36.
- Ultraflex C5, C16 and MACH5 cables require **K35** kit - 34730 U

MODELS

B65 - 34731 V
Single lever control for one engine, chrome plated.

B76 - 35312 E
Single lever control for one engine, chrome plated, with trim.

B66 - 34732 W
Twin lever control for two engines, chrome plated.

B78 - 35314 G
Twin lever control for two engines, chrome plated, with trim.

B73 -35007 U
Single lever control for one engine, black dome, chrome plated lever.

B77 - 35313 F
Single lever control for one engine, black dome, chrome plated lever, with trim.

B74 - 35008 B
Twin lever control for two engines, black dome, chrome plated lever.

B79 - 35315 H
Twin lever control for two engines, black dome, chrome plated lever, with trim.

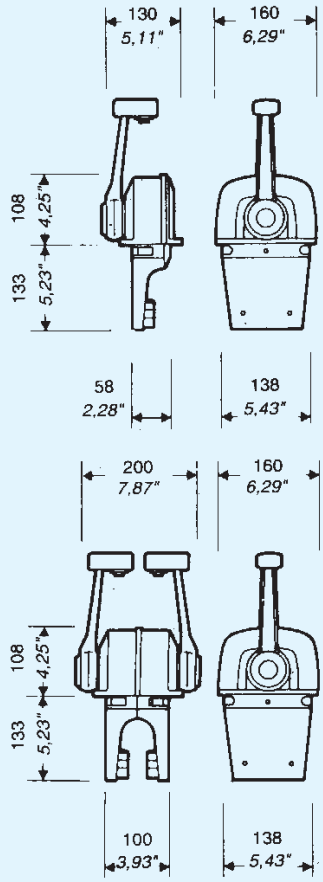



Handle with trim



SINGLE LEVER TOP MOUNT CONTROLS



Single lever / dual action control to operate both throttle and shift.
Suitable for any type of boats with outboard, inboard or I/O power plants.

FEATURES

- Enables easy and safe shifting by preventing accidental gear engagement unless engine is idling
- Made of marine aluminum, chrome plated or powder coat finish
- Pull-out handle disengages shift for warm-up
- Neutral safety switch **X12** - 34543 Q (optional) prevents in-gear starting
- Exceeds EN ISO 11547 standards when X12 safety switch is installed
- Provided with a positive lock-in neutral to prevent accidental gear engagement
- For use with all Ultraflex engine control cables except C22, C4 (discontinued) , C36 and MACH36.
  Ultraflex C5, C16 and MACH5 cables require **K35** kit - 34730 U

MODELS

B665 - 40656 G
Single lever control for one engine. Chrome plated.

B666 - 40657 J
Twin lever control for two engines. Chrome plated.



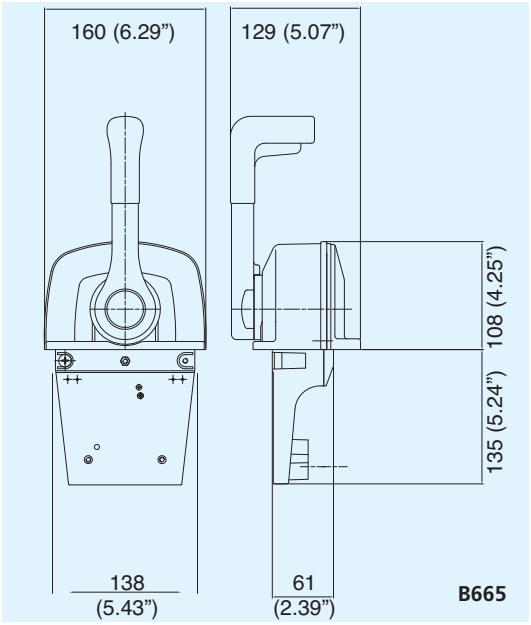

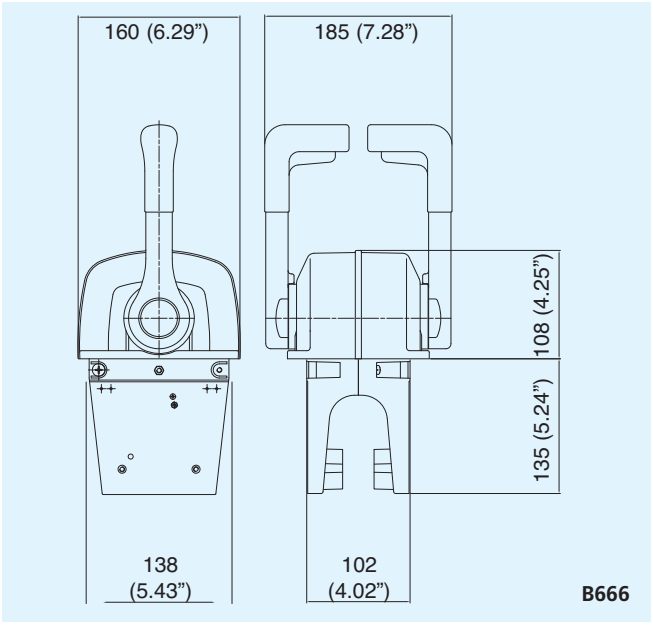

SINGLE LEVER
SIDE MOUNT CONTROLS



Single lever / dual action control to operate both throttle and shift.
Suitable for any type of boats with outboard, inboard or I/O power plants.

FEATURES

- Enables easy and safe shifting by preventing accidental gear engagement unless engine is idling
- Can be installed horizontally or vertically, on the starboard or port side of the boat
- Provided with a brake tension release system adjustable from outside
- Pull-out handle disengages shift for warm-up
- Neutral safety switch **X12** - 34543 Q (optional) prevents in-gear starting
- Exceeds EN ISO 11547 standards when X12 safety switch is installed
- All models are provided with positive lock-in neutral to prevent accidental gear engagement
- All models are provided with a power trim switch conveniently located in the handle grip that enables an easy tilting of the engine
- For use with all Ultraflex engine control cables except C22, C36 and MACH36.
- Ultraflex C5, C16 and MACH5 cables require **K35** - 34730 U connection kit

MODELS

B310CH - 41789 H
Provided with a positive lock-in neutral and trim switch

B310BR - 41788 F
Provided with a positive lock-in neutral and trim switch

B310B - 41790 S
Provided with a positive lock-in neutral and trim switch



B310CH



B310BR



B310B

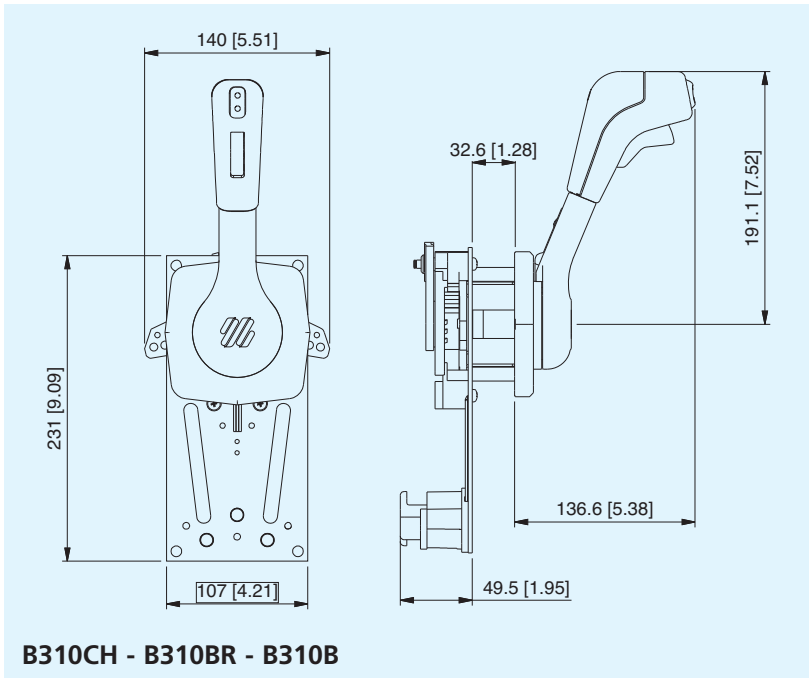

B310CH - B310BR - B310B



SINGLE LEVER
SIDE MOUNT CONTROLS

Single lever / dual action control to operate both throttle and shift.
Suitable for any type of boats with outboard, inboard or I/O power plants.

FEATURES

- Enables easy and safe shifting by preventing accidental gear engagement unless engine is idling
- Can be installed horizontally or vertically, on the starboard or port side of the boat
- Provided with a brake tension release system adjustable from outside
- Pull-out handle disengages shift for warm-up
- Neutral safety switch **X12** - 34543 Q (optional) prevents in-gear starting
- Exceeds EN ISO 11547 standards when X12 safety switch is installed
- All models are provided with positive lock-in neutral to prevent accidental gear engagement
- B184 and B184CB models are provided with a power trim switch conveniently located in the handle grip that enables an easy tilting of the engine
- For use with all Ultraflex engine control cables except C4 (discontinued) , C22, C36 and MACH36.
- Ultraflex C5, C16 and MACH5 cables require **K35** - 34730 U connection kit

MODELS

B183 - 38945 B
Provided with a positive lock-in neutral

B184 - 38946 D
Provided with a positive lock-in neutral and trim switch

B184CB - 40666 K
Provided with a positive lock-in neutral and trim switch

B85 - 35682 I
Standard model, smooth design for use on sailboats. Provided with a positive lock-in neutral.



B183



B184



B184CB



B85

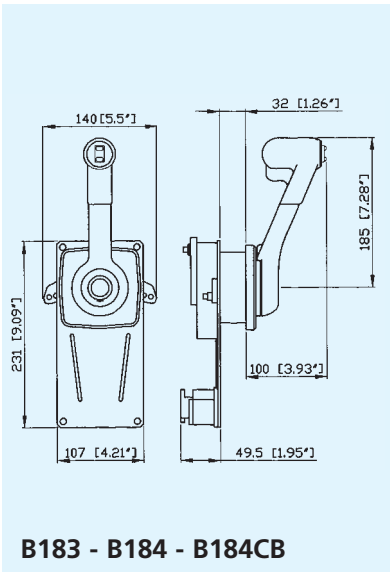

B183 - B184 - B184CB

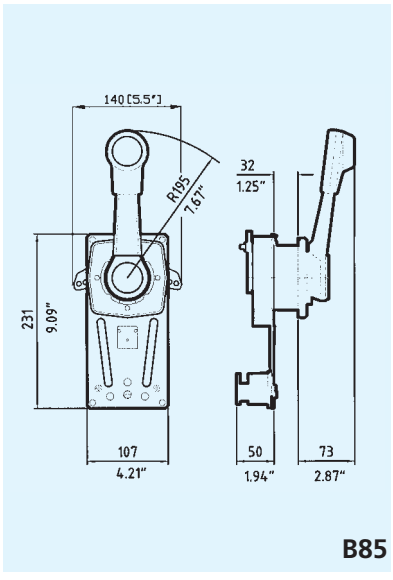

B85

SINGLE LEVER SIDE MOUNT CONTROLS





B89

B90

Single lever / dual action control to operate both throttle and shift.
Suitable for any type of boats with outboard, inboard or I/O power plants.

FEATURES

- Enables easy and safe shifting by preventing accidental gear engagement unless engine is idling
- Can be installed horizontally or vertically, on the starboard or port side of the boat
- Made of painted marine aluminum
- Pull-out handle disengages shift for warm-up
- Neutral safety switch **X12** - 34543 Q (optional) prevents in-gear starting
- Exceeds EN ISO 11547 standards when X12 safety switch is installed
- Provided with a positive lock-in neutral to prevent accidental gear engagement
- For use with all Ultraflex engine control cables except C4 (discontinued), C22, C36 and MACH36.
- Ultraflex C5, C16 and MACH5 cables require **K35** - 34730 U connection kit.
- To connect C14 and MACH14 cables to engine, use **K51** - 32526 N connection kit.

MODELS

B89 - 36151 G
Ivory finish with positive lock-in neutral.

B90 - 36152 H
Black finish with positive lock-in neutral.



Lock-in neutral

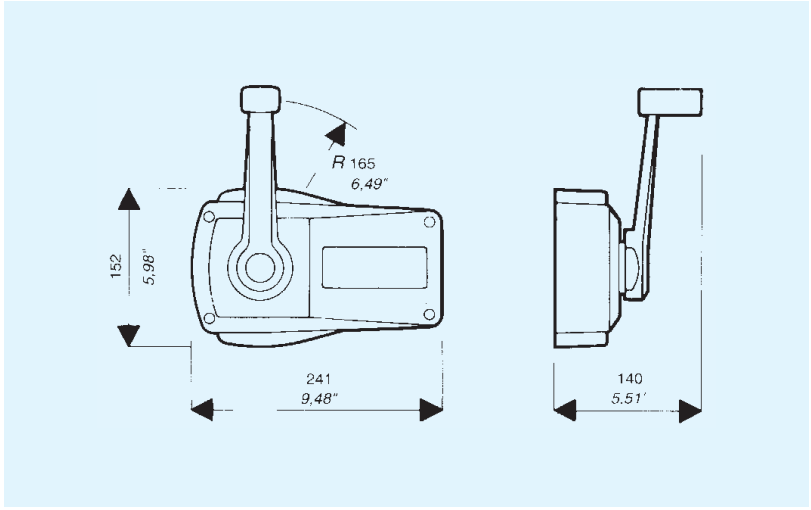



TWO LEVER TOP MOUNT CONTROLS



Two lever / single action control: each lever operates separately either the throttle or the shift.
Suitable for use with outboard, inboard or I/O power plants.

FEATURES

- Flush mount suitable for exposed positions such as flying bridge
- Made of marine aluminum with chrome plated lever
- Throttle lever is provided with adjustable brake tension release system and shift lever with forward, reverse and neutral detents. Both the brake tension release and detents can be installed and adjusted from the outside.
- Neutral safety switch **X12** - 34543 Q (optional) prevents in-gear starting
- Exceeds EN ISO 11547 standards when X12 safety switch is installed
- Available with straight or bent levers
- B58 and B59 models are provided with an interlock kit to prevent accidental gear engagement
- For use with Ultraflex C2, C8 and MACHZero engine control cables.
- Ultraflex C22 cable requires **K22** - 34713 Q connection kit.

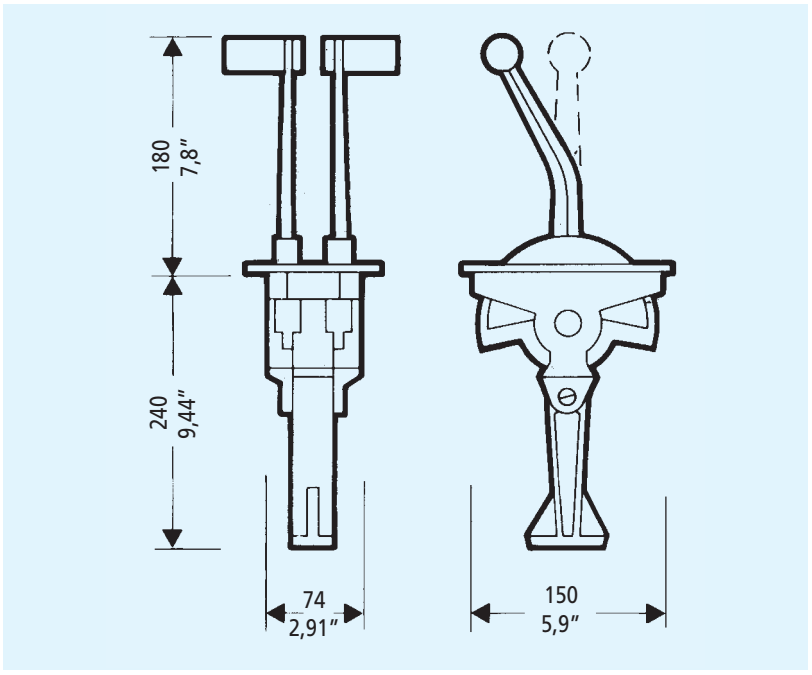

MODELS

BENT LEVERS:

B46	- 34461 P	Throttle and shift
B46T	- 34462 Q	Throttle only
B46S	- 34463 R	Shift only
B58R	- 34570 W	Throttle and shift. With interlock. Right hand installation
B58L	- 34716 T	Throttle and shift. With interlock. Left hand installation

STRAIGHT LEVERS:

B50	- 34464 S	Throttle and shift
B50T	- 34465 T	Throttle only
B50S	- 34466 U	Shift only
B59R	- 34571 X	Throttle and shift. With interlock. Right hand installation
B59L	- 34717 U	Throttle and shift. With interlock. Left hand installation

TWO LEVER TOP MOUNT CONTROLS





Two lever / single action control: each lever operates separately either the throttle or the shift.
Suitable for use with outboard, inboard or I/O power plants.

FEATURES

- Flush mount suitable for exposed positions such as flying bridge
- Levers structure made of die cast zinc provided with a soft thermoplastic ergonomical handgrip
- Adjustable brake to avoid throttle creep and positive detent for shift
- Neutral safety switch **X12** - 34543 Q (optional) prevents in-gear starting
- Exceeds EN ISO 11547 standards when X12 safety switch is installed
- Raked throttle handle and straight gear handle for a better manoeuvring
- B204 and B208 models are provided with an interlock kit to prevent accidental gear engagement
- For use with Ultraflex C2, C8 and MACHZero engine control cables.
- Ultraflex C22 cable requires **K22** - 34713 Q connection kit.

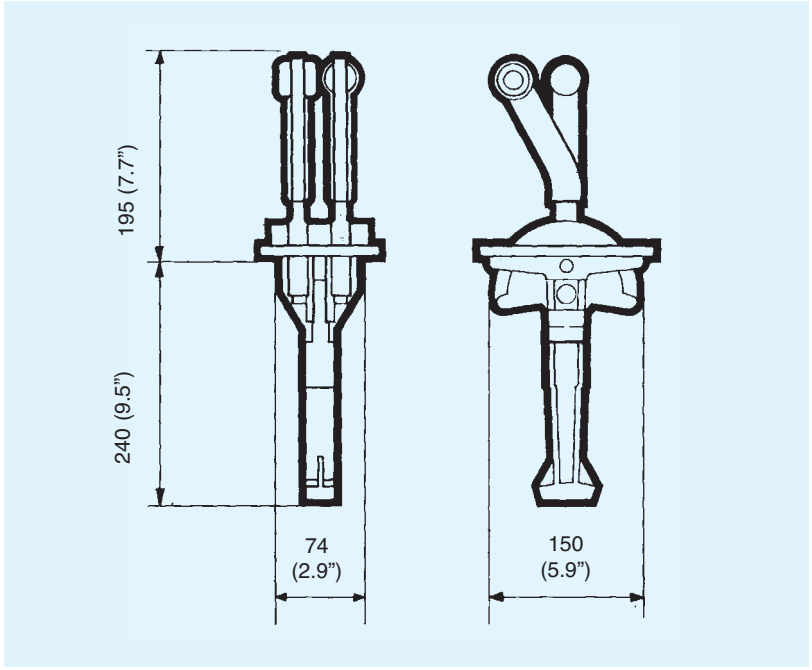

MODELS

Black painted controls with black soft hand grip:

B203 - 37378 A	Throttle and shift.
B204R - 37383 C	Throttle and shift. With interlock. Right hand installation
B204L - 37384 D	Throttle and shift. With interlock. Left hand installation

White painted controls with grey soft hand grip:

B207 - 37650 Y	Throttle and shift.
B208R - 37654 C	Throttle and shift. With interlock. Right hand installation
B208L - 37655 D	Throttle and shift. With interlock. Left hand installation



TWO LEVER TOP MOUNT CONTROLS



Two lever / single action control: each lever operates separately either the throttle or the shift.
Suitable for use with outboard, inboard or I/O power plants.

FEATURES

- Made of aluminium, chrome plated or black powder coat finish
- Throttle lever is provided with adjustable brake tension release system and shift lever with forward, reverse and neutral detents.
- Neutral safety switch **X12**-34543 Q (optional) prevents in-gear starting
- In dual station applications the **L23**-31649 B selector unit has to be used (page 110)
- Exceeds EN ISO 11547 standards when X12 safety switch is installed
- Use with all Ultraflex control cables except C4 (discontinued):
  - C14 and MACH14 cables require no kit
  - For C2, C8 and MACHZero cables the connection kit **K67** - 40705 T is included
  - C5, C16 and MACH5 cables require **K63** kit - 40757 N
  - C22 cable requires **K64** kit - 40758 R
  - C36 and MACH36 cables require **K65** kit - 40759 T

MODELS

CHROME PLATED:
B322 - 40669 S Throttle and shift
B322T - 40670 A Throttle only
B322S - 40673 G Shift only

BLACK FINISH:
B324 - 40674 J Throttle and shift
B324T - 40675 L Throttle only
B324S - 40676 N Shift only

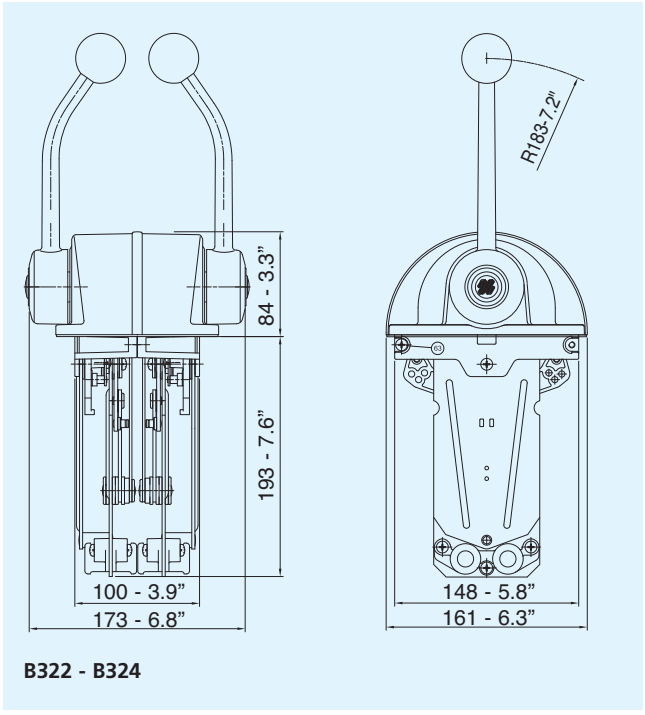

B322 - B324

TWO LEVER
TOP MOUNT CONTROLS





B99 B100



B101 B102

Two lever / single action control: each lever operates separately either the throttle or the shift.
Suitable for use with outboard, inboard or I/O power plants.

FEATURES

- All the four versions are provided with the shift lever detents and with a brake tension release system adjustable from the outside of the throttle lever
- Neutral safety switch **X12** - 34543 Q (optional) prevents in-gear starting
- Exceeds EN ISO 11547 standards when X12 safety switch is installed
- Suitable for exposed positions such as flying bridge
- For use with Ultraflex C2, C8 and MACHZero engine control cables
- Ultraflex C22 cable requires **K32** - 34662 Z connection kit

MODELS

B99 - 36854 N
Throttle and shift. Black painted with chrome levers

B100 36855 O
Throttle and shift. Sport black painted

B101 - 36856 P
Throttle and shift. White painted

B102 - 36899 G
Throttle and shift. Black painted

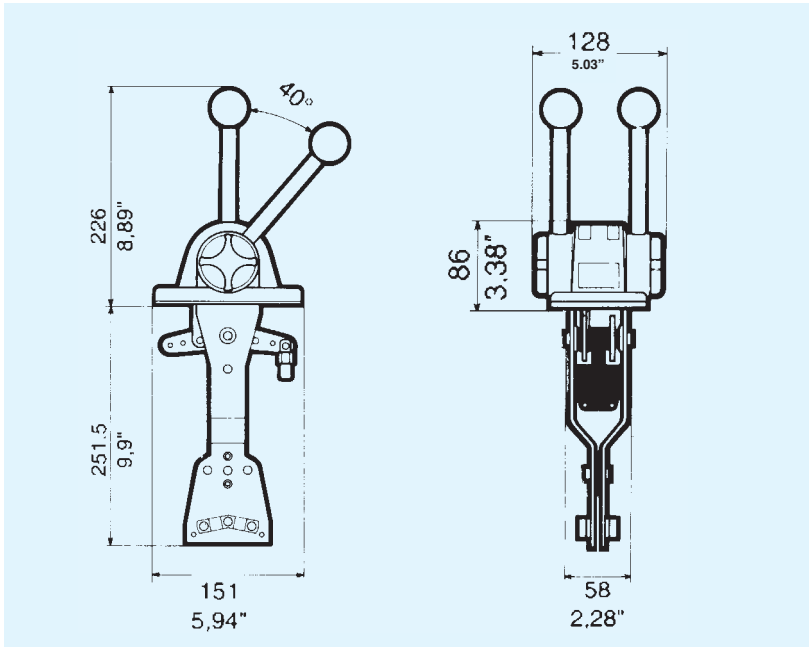



TWO LEVER SIDE MOUNT CONTROLS



B47 **B49**

Suitable for all outboard engines.

FEATURES

- Made of nylon fiberglass with anodized aluminum levers
- Left or right side mount installation
- For use with Ultraflex engine control cables:
  - C14 and MACH14 with **K23** - 32773 D connection kit
  - C2, C8, and MACHZero with **K25** - 32775 F connection kit
  - C5 and MACH5 without connection kit

MODELS

B47 - 32770 A - Light grey finish
B49 - 33283 S - Black finish

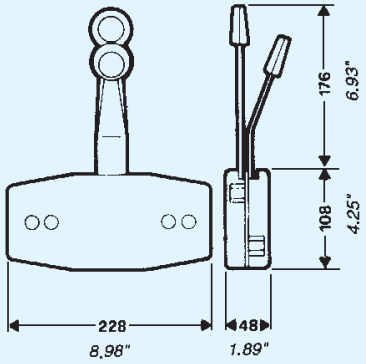

B47 - B49

B35 CONTROL BOX

FEATURES

- Lever and flange all stainless steel.
- Flush side mount installation.
- Particulary suitable for throttle control and hydraulic shift operation.
- Provided with adjustable brake tension release and detents.
- For use with Ultraflex C2, C8 and MACHZero engine control cables
  B35 - 32386 A

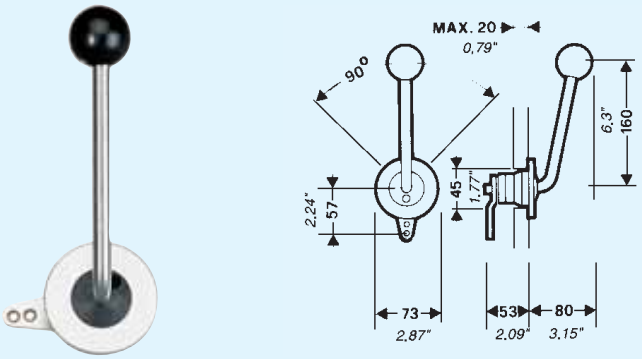

B35

ACCESSORIES FOR CONTROL BOXES

K22 - 34713 Q
Kit to connect C22 cable to top mount two lever control boxes, B46, B50, B58, B59, B203, B204, B207, B208, B322, B324

K23 - 32773 D
Kit to connect C14 and MACH14 cables to B47 and B49 control boxes.

K25 - 32775 F
Kit to connect C2, C8 and MACHZero cables to B47 and B49 control boxes.

K32 - 34662 Z
Kit to connect C22 cable to top mount two lever control boxes B99 , B100, B101 and B102.

K33 - 38378 D
Kit to connect C22 cable to B103 control box.

K35 - 34730 U
Kit to connect C5, C16 and MACH5 cables to single lever control boxes, except B301, B302, B103 and B104.

K51 - 32526 N
Kit to connect C14 and MACH14 cables to engine for use with B89 and B90 controls.

K59 - 40144 C
Kit to connect C2, C8 and MACHZero cables to B301 and B302 controls (supplied with the box).

K60 – 40145 E
Kit to connect C5, C16 and MACH5 cables to B301 and B302 control boxes.

K61 – 40146 G
Kit to connect C22 cable to B301 and B302 control boxes.

K62 – 40147 J
Kit to connect C36 and MACH36 cables to B301 and B302 control boxes.

K63 - 40757 N
Kit to connect C5, C16, MACH5 cables to B322 and B324 controls.

K64 - 40758 R
Kit to connect C22 cable to B322 and B324 controls.

K65 - 40759 T
Kit to connect C36 and MACH36 cables to B322 and B324 controls.

K67 - 40705 T
Kit to connect C2, C8 and MACHZero cables to B322 and B324 controls (supplied with the box)

X12 - 34543 Q
Neutral safety switch to prevent in-gear starting.

X43 - 38160 L
Neutral safety switch to prevent in-gear starting, suitable for B103 and B104 controls.

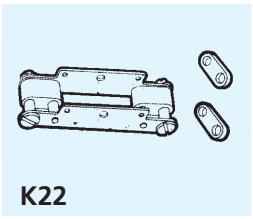
K22

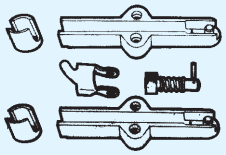
K23

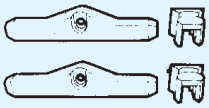
K25

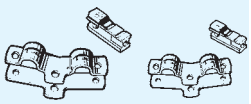
K32

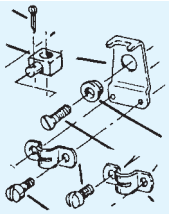
K33

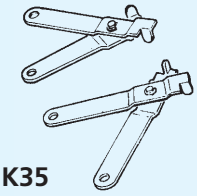
K35

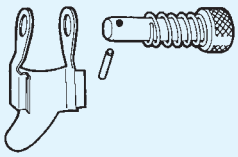
K51

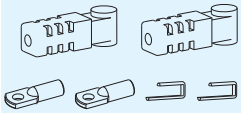
K59

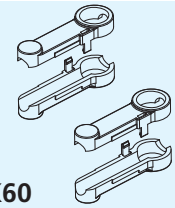
K60

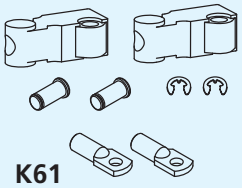
K61

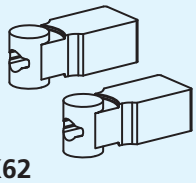
K62

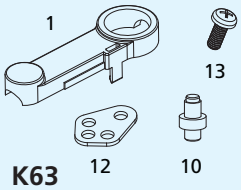

K63

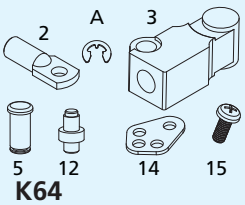

K64

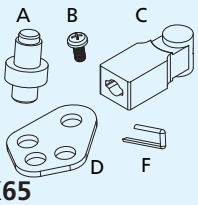

K65

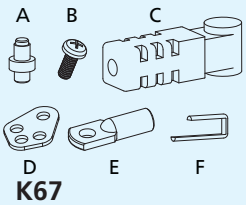

K67

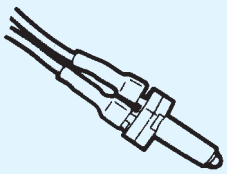
X12

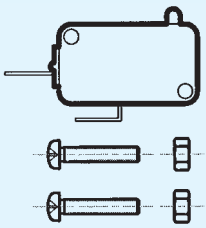
X43



ENGINE CONTROL CABLES



HOW TO MEASURE FOR CONTROL CABLE INSTALLATION

FOR NEW INSTALLATION, measure A + B distance from the control along an unobstructed cable routing to clutch and / or throttle connection.
Round this dimension off to the next whole foot: you will have your cable length.
We recommend that the cable bends have a minimum radius of about 8" (200 mm).
For outboard engine installations, it is necessary to add three feet to the obtained length, in order to allow the engine movement.
To determine the needed length of the REPLACEMENT CABLE, measure it from tip to tip.
When ordering, specify the cable length in feet, rounding the dimension off to the next whole value.
If any kit is required to complete the cable connection, consult the appropriate section in this catalogue. (Page 107)

SELECTION OF ENGINE CONTROL CABLES

ENGINE		ULTRAFLEX ENGINE CONTROL CABLES
OUTBOARD	Mercury® and Gen. II™ Controls	C36 - MACH36
	Mercury® Mariner® over 50 hp (37kW)	C5 - MACH5
	Mariner® up to 50 hp (37kW)	C16
	Force® Selva® Yamaha® Suzuki® Tohatsu® Honda® Nissan®	C2 - C8 - MACHZero
	Johnson® - Evinrude®	after 1979 C14-MACH14
JET	Weber®	C40 - C41
STERNDRIVE	Mercruiser® and Gen. II™ Controls	C36 - MACH36
	Mercruiser®	C5 - MACH5
	OMC®	after 1979 C14-MACH14
	Volvo Penta® Yanmar® Volkswagen®	C2 - C8 MACHZero - C22
INBOARD		C2 - C8 - MACHZero - C22

OUTBOARD

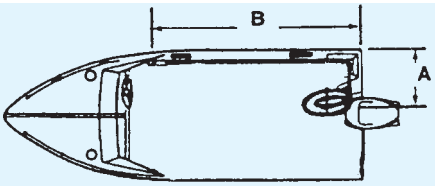

A + B + 3' (90 cm) = L

INBOARD/STERNDRIVE

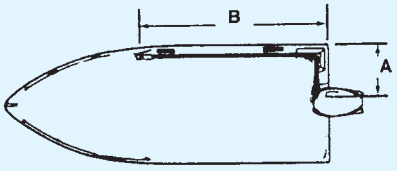

A + B = L

MACH™ SERIES HIGH EFFICIENCY AND FLEXIBILTY ENGINE CONTROL CABLES



High efficiency control cables that Ultraflex has developed in order to meet the increasing request for "high performance" cables in various configurations.

HIGH PERFORMANCE

- The PATENTED "high performance" ***MACH™*** Cables are the result of our decades of experience in producing high quality, long lasting, flexible cables. The innovative core design maximizes efficiency and minimizes lost motion, while the exclusive design of the conduit provides extremely high level of flexibility.

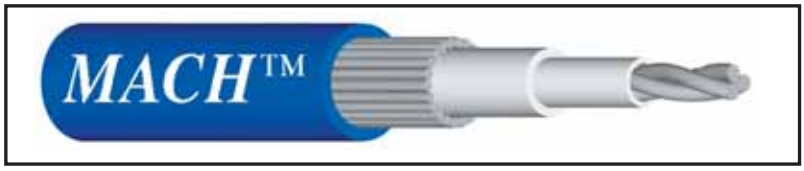

FEATURES AND PERFORMANCE

- Available in the following configurations:
  - **MACHZero** - Universal style (like C2, C8)
  - **MACH5** - Mercury® style (like C5)
  - **MACH14** - Current OMC® style (like C14)
  - **MACH36** - Gen II Mercury® style (like C36)
- Suitable for outboard – inboard and sterndrive engines
- High efficiency for smooth operation
- High flexibility for reduced bend radius. Ideal for long complex cable routings
- Maintenance free
- Stainless steel cables end fittings
- High resistance blue outer jacket against abrasion, UV and chemicals

CONTROL CABLES FOR WEBER® ENGINES

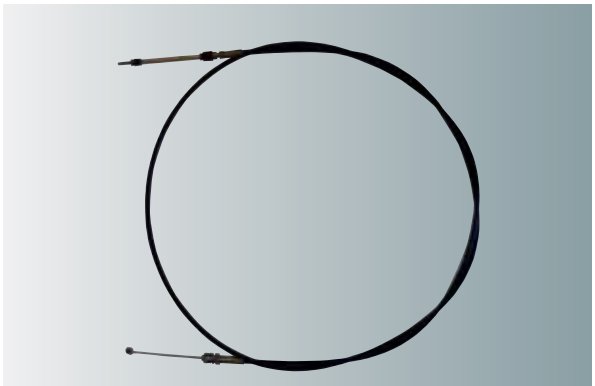

C40 Stroke: 3,5 " (90 mm) Throttle cable for Weber® engines

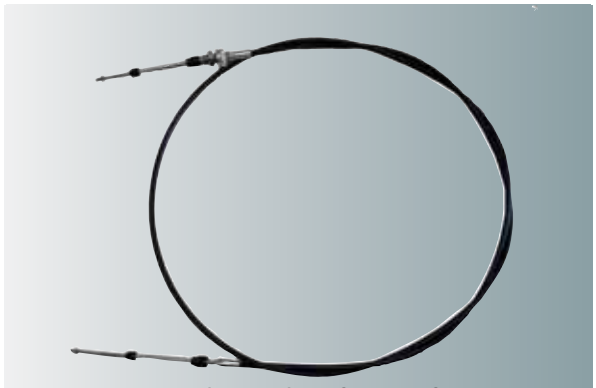

C41 Stroke: 3,1" (78 mm) Shift cable for Jet Weber® engines



ENGINE CONTROL CABLES

C2 Stroke: 87 mm (3.4”)
For use with inboard, sterndrive and outboard engines with appropriate accessories.

C8 Stroke: 87 mm (3.4”)
For use with inboard, sterndrive and outboard engines, with appropriate accessories.

MACHZero 87 mm (3.4”)
For use with inboard, sterndrive and outboard engines.
Ideal for high performance applications, long cable runs and complex routings.
Blue color jacket.

C14 Stroke: 75 mm (3”)
For Johnson®, Evinrude®, OMC® engines manufactured from 1979 to date.

MACH14 Stroke: 75 mm (3”).
For Johnson®, Evinrude®, OMC® engines manufactured from 1979 to date.
Blue color jacket
High performance applications

C36 Stroke: 87 mm (3.4”)
For Mercury® and Mercruiser® engines and Mercury® Generation II™ series controls.

MACH36 Stroke: 87 mm (3.4”).
For Mercury® and Mercruiser® engines and Mercury® Generation II™ series controls.
Blue color jacket
High performance applications

C5 Stroke: 95 mm (3.75”)
For Mercury® and Mercruiser® engines.

MACH5 Stroke: 95 mm (3.75”).
For Mercury® and Mercruiser® engines.
Blue color jacket
High performance applications

C16 Stroke: 80 mm (3.1”). For Mariner® engines up to 40 hp.

C22 Stroke: 80 mm (3.1”)
Stainless steel clamp fittings.
Recommended for heavy duty applications.

B14 Stroke: 70 mm (2.8”)
Designed for throttle, fuel shut-off and other applications. Supplied with L13 and L14 clamp and shim.

K68 - 40895 B
Recessed bulkhead support for B14 cable.

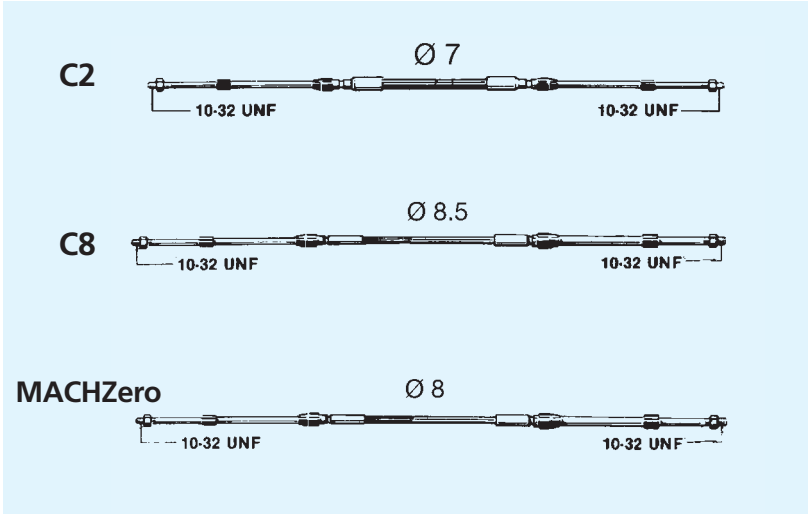

OMC® - JOHNSON® - EVINRUDE® CABLES

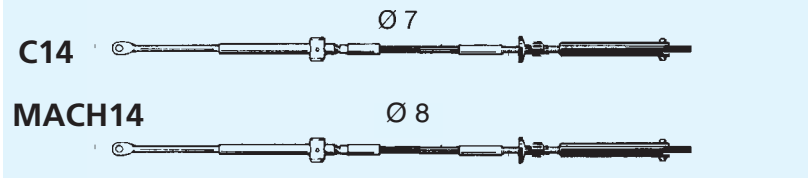

MERCURY® - MERCRUISER® - MARINER® CABLES

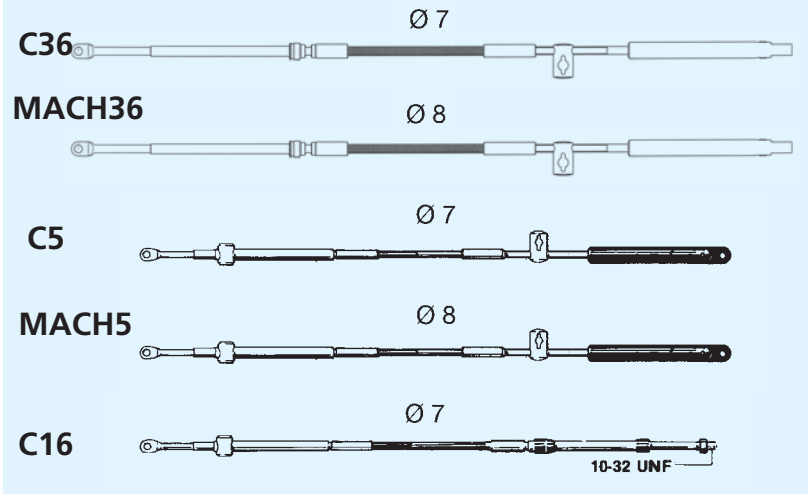

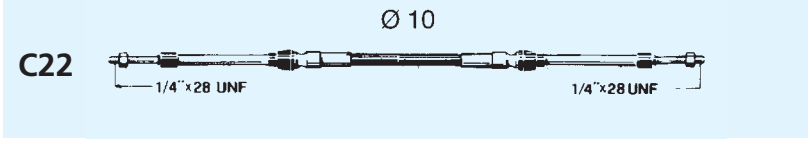

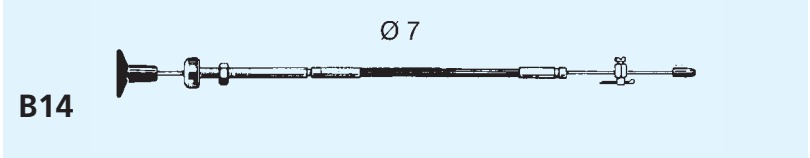

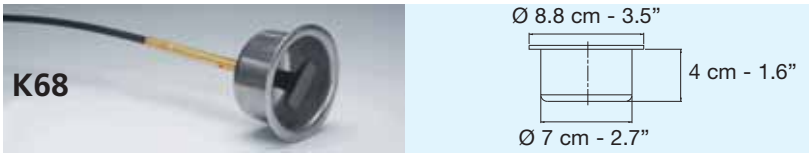

ACCESSORIES FOR ENGINE CONTROL CABLES

L2 - 30324 D
Cable clamp block

L3 - 30325 E
Shim and clamp block.
Fits C2, C8 and MACHCZero cables.

L7 - 38078 U
Ball joint 10-32 UNF.
Stainless steel, fits C2, C8 and MACHCZero cables.

L12 - 30334 F
Cable end fitting.
Fits C2, C8 and MACHCZero cables.

L13 - 30335 G
Stop collar. Fits C4 and B14 cables.

L14 - 30336 H
Cable clamp block.
Fits C2, C8 and MACHCZero cables.

L25 - 31906 D
Clevis 10-32 UNF.
Fits C2, C8 and MACHCZero cables.

L26 - 33517 N
Clevis 1/4" x 28 threaded. Fits C22 cable.

K56 - 39237 C
Adapts C2, C8 and MACHCZero cables for use with Mercury engines.

K57 - 39238 E
Adapts C2, C8 and MACHCZero cables for use with Johnson / Evinrude engines.

YAMAHA ENGINE KITS*

K7 - 30320 V for 15 hp engines
K8 - 30321 A for 25 hp engines
K9B - 33205 A for 5 hp engines
K14B - 32584 E for 10/15 hp engines
K14F - 38098 C for 10/15 hp engines
K36 - 35034 B for 8 hp engines
S-2674 - 32654 X Yamaha Throttle Connector
S-2675 - 32655 Y Yamaha Shift Connector

** Minimun order quantity:*
10 pieces for part number

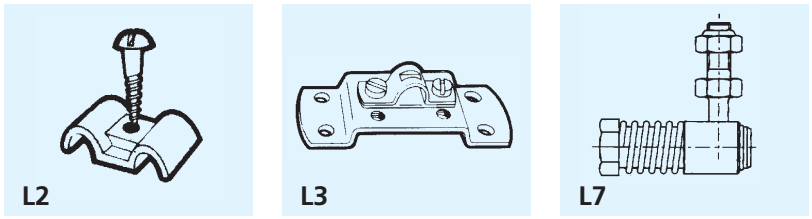

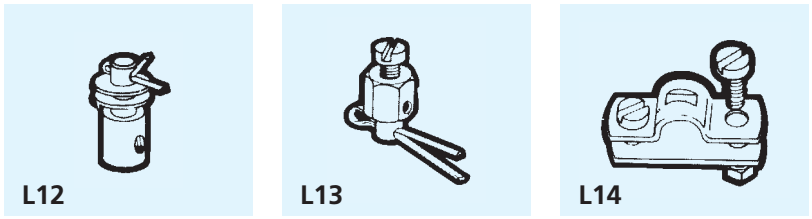

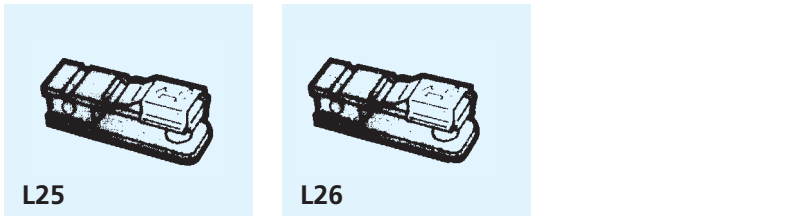

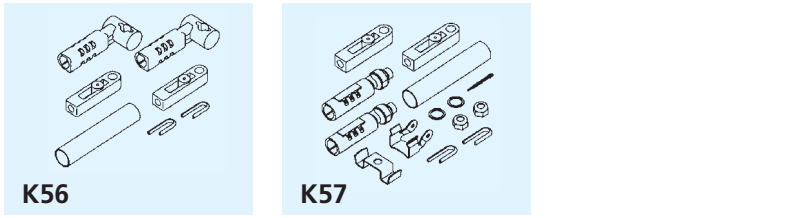





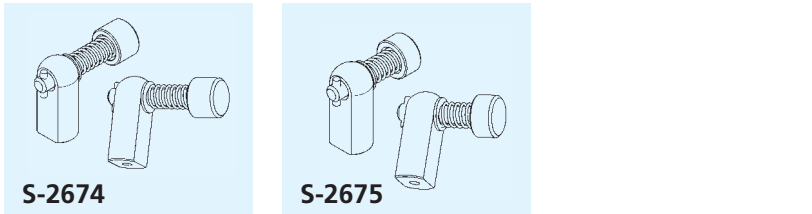





SELECTOR UNIT FOR DUAL STATION APPLICATIONS

Selector unit for use with single lever controls in dual station applications. It enables indipendent control over throttle and shift from either the main station or the flying bridge station.

NOTE: before changing station, throttle must be on idling position and shift in neutral.

L23 - 31649 B

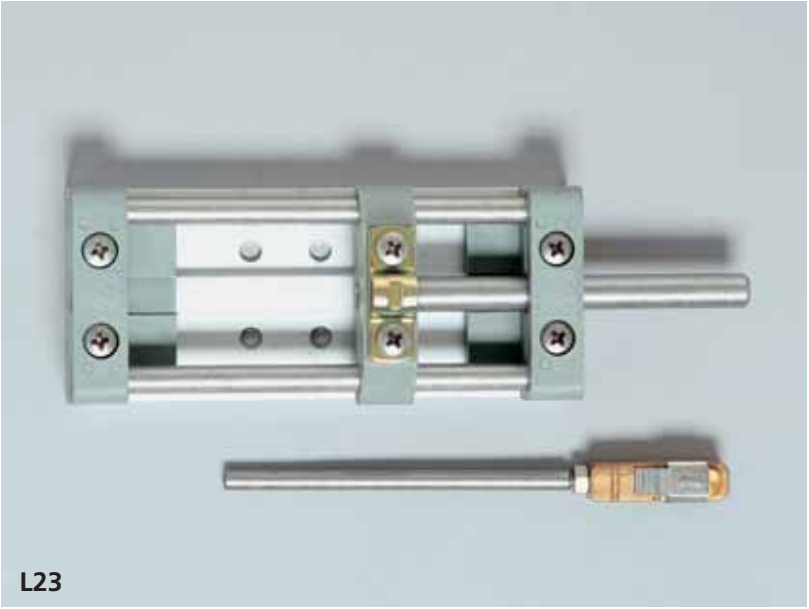

L23

CONTROL CABLE APPLICATION MATRIX

SINGLE LEVER CONTROLS

MODEL	B301 B302	B103	B104	B65 - B66 - B73 B74 - B76 - B77 - B78 B79 - B665 - B666	B183 - B184 B184CB - B85 B310CH - B310BR - B310B	B89 B90
C2	K59*	X	X	X	X	X
C8	K59*	X	X	X	X	X
C14	X	-	-	X	X	X
C5	K60	-	-	K35	K35	K35
C36	K62	-	-	-	-	-
C16	K60	-	-	K35	K35	K35
C22	K61	K33	-	-	-	-
MACHZero	K59*	X	X	X	X	X
MACH5	K60	-	-	K35	K35	K35
MACH36	K62	-	-	-	-	-
MACH14	X	-	-	X	X	X

***: Supplied with the control
X: No kit required
- : No connection

TWO LEVER CONTROLS

MODEL	B322 B324	B46 - B50 - B58- B59 B203 - B204 - B207 - B208	B99 - B100 B101 - B102	B47 B49	B35
C2	K67*	X	X	K25	X
C8	K67*	X	X	K25	X
C14	X	-	-	K23	-
C5	K63	-	-	X	-
C36	K65	-	-	-	-
C16	K63	-	-	X	-
C22	K64	K22	K32	-	-
MACHZero	K67*	X	X	K25	X
MACH5	K63	-	-	X	-
MACH36	K65	-	-	-	-
MACH14	X	-	-	K23	-

***: Supplied with the control
X: No kit required
- : No connection


ULTRAFLEX
ULTRAFLEX S.p.A.
Hydraulic cylinder UC128/1



WARNING

In order to mantain the correct functionality of the product, the replacement with spare parts has to be made by qualified technicians **only**.

T67

Black bezel	59336 W
White bezel	59601 U
Zinc-chrome steel bushing	56402 K
Installation kit	38070 K
Shaft kit	70550 J

M58

Lock nut engine side	55170 M

T85

Black bezel	59336 W
White bezel	59601 U
Shaft kit	70550 J
Spent travel nylon tube	59869 F
Plastic ferrule for nylon tube	59857 Z
Cable lock-in screw	59926 R
Installation kit	41165 S

T71FC - T72FC - T73NRFC - T74NRFC

90° Black bezel	58051 L
90° White bezel	71942 H
Shaft kit	70549 A
Cable lock-in screw	70022 G
Spent travel nylon tube	59869 F
Plastic ferrule for nylon tube	59857 Z

X52 Tilt Mechanism

Upper cover	70123 N
Lower cover	70140 N
Gasket	70138 C

T86 - T88

2 Shaft kits	71109 A

Steering Wheels

Stainless steel silver screws	60697 Q
Stainless steel black screws	60698 T
Black cap for V32	58078 Y
White cap for V32	58079 Z
Grey cap for V32	70155 C
Black cap for V33	59763 O
White cap for V33	59764 P
Grey cap for V33	59765 Q
Black cap for V45	59061 O
White cap for V45	59002 D
Grey cap for V45	71108 Y
Black cap for V38	59061 O
White cap for V38	59002 D
Black cap for Antigua	70161 X
White cap for Antigua	70162 Z
Grey cap for Antigua	70163 V
Silver painted cap for Antigua	70165 F
Burl wood cap for Antigua	70164 D
Wood cap for V23 and V35	56384 G

B301CR - B302CR - B301B - B302B - B322 - B324

Lever assembly with black knob	40897 F
Lever assembly with red knob B322 - B324	40898 H
Black knob	72054 G
Red knob	72020 N
Chrome rear cover B301CR	71461 R
Black painted rear cover B301B	71501 A
Gasket for B301CR - B301B	71366 X
Gasket for B302CR - B302B - B322 - B324	71516 P
Installation kit B301CR	40170 D
Installation kit B301B	40744 D
Installation kit B302CR	40743 B
Installation kit B302B	40192 P
Installation kit B322 - B324	40703 N

B103 - B104

Lever with handle	60909 N
Black knob	34830001
X55 Silver knob B103/B104	39421 V
Gasket for B103	61425 E
Gasket for B104	61426 G
Rear cover for B103	61738 C
Installation kit B103	60979 B
Installation kit B104	60804 D

B65 - B665 - B66 - B666
B73 - B74 - B76 - B77 - B78 - B79

Lever assembly B66 – B65 – B73 – B74	57076 R
Lever assembly B665	40915 E
Lever assembly B666	40916 G
Lever assembly with trim B76-B77-B78-B79	57459 E
Chrome rear cover	55529 Z
Black rear cover	55608 X
Installation kit B65 - B665	35147 J
Installation kit B66 - B666	30078 K
Installation kit B73	30049 F
Installation kit B74	35366 S
Installation kit B76	36134 F
Installation kit B77	30016 Q
Installation kit B78	36135 G
Installation kit B79	30017 R

B310CH - B310BR - B310B

Lever assembly B310CH	73158 A
Lever assembly B310BR	72119 J
Lever assembly B310B	73177 E
Screw cover flange B310CH - B310BR - B310B	72110 P
Chrome plated external flange B310CH - B310BR - B310B	72108 D
Black external flange B310CH - B310BR - B310B	72109 F
Installation kit B310CH - B310BR - B310B	72222 B

B183 - B184 - B184CB - B85

Lever assembly B183	70013 F
Lever assembly B184	70020 C
Lever assembly B184CB	72005 T
Cover for B183 – B184 – B184CB – B85	56012 A
Flange for B183 – B184 – B184CB – B85	56011 V
Installation kit B103	38947 F
Installation kit B184 – B184CB	38979 V
Installation kit B85	36008 C

B89 - B90

Black lever with lock	58245 T
White lever with lock	57899 L
Installation kit B89 - B90	36168 R

B46 - B50 - B58 - B59

Cover	57960 T
Black knob	32394 A
Red knob	32472 Q
Installation kit	35365 R

B203 - B204 - B207 - B208

Black cover	57960 T
White cover	59446 B
Burl wood cover	38985 P
Installation kit	35365 R

B99 - B100 - B101 - B102

Red knob B99 – B100 – B101 – B102	58266 Y
Black knob B99 – B100 – B101 – B102	53185 V
Installation kit B99 – B101 – B102	35391 A
Installation kit B100	35403 G

B14 Engine Stop Cable

B14 Kit	59976 G



AVAILABLE SPARE PARTS

WARNING

In order to mantain the correct functionality of the product, the replacement with spare parts has to be made by qualified technicians **only**.

HELM PUMPS

Vented filler plug kit with valve	40801 N
Non vented filler plug kit	40800 L
Shaft seal kit	40875 V
Installation kit for UP20 F	40248 R
Installation kit for UP20 T	39501 T
Installation kit for: UP25 F/25NV F/28 F/33 F/33NV F/39 F/UP28F-SVS, UP33F-SVS	39476 X
Installation kit for UP25 T/28 T/33 T/39 T	39501 T
Installation kit for UP28 R/33 R/39 R	39500 R
Nylon round flange for X57	70666 E
Nylon square flange for X64	70670 V
Chrome plated cover ring - X68	40894 Z
Pump filling kit	40876 X

UC94-OBF OUTBOARD CYLINDER

Black bull horn mounting bracket	40877 Z
Through tube stainless steel rod	40174 M
Spacer kit	40878 B

UC128-OBF OUTBOARD CYLINDER

Black bull horn mounting bracket	39490 R
Through tube stainless steel rod	39491 T
Spacer kit	41812 Z
Plastic cap kit	41810 V
UC128 Hardware kit	39979 A
Tiller arm connecting (ultrabolt) (suitable also for UC128-SVS)	40822 X

UC68-OBS OUTBOARD CYLINDER

Stainless steel tilt tube extension	39495 B

UC132-OBS OUTBOARD CYLINDER

Stainless steel tilt tube extension	39495 B
Extension rod connecting pin	40917 J

INBOARD CYLINDERS

Balljoint for UC69-I	40883 U
Balljoint for UC116-I	39477 Z
Balljoint for UC168-I and UC215-I	39478 B
Balljoint for UC293-I	40178 W
Balljoint for UC378-I	41310 Y
Balljoint and shim for UC69-I	40884 W
Balljoint and shim for UC116-I	39479 D
Balljoint and shim for UC168-I e UC215-I	39480 M
Balljoint and shim for UC293-I	40180 G
Balljoint and shim for UC378-I	41311 A

STERNDRIVE CYLINDERS

Extension rod connecting pin	40917 J

NUT AND SLEEVE

Brass nut and sleeve	71004 K
Nickel plated brass nut and sleeve	71013 L

Cover picture: with the kind cooperation of Maxi Dolphin S.r.l.

ULTRAFLEX S.p.a.

Via Milite Ignoto 8A
16012 Busalla (GE) - Italy
T +39 010 9620310 F +39 010 9620333
ut@ultraflexgroup.it
www.ultraflexgroup.it

ULTRAFLEX GROUP