HOW TO ORDER REPLACEMENT PARTS

To order replacement parts, simply call our Customer Service Department toll-free at 1-800-999-3756, Monday through Friday, 6 a.m. until 6 p.m. Mountain Time (excluding holidays). To help us assist you, please be prepared to give the following information when calling:

- The MODEL NUMBER of the product (IMEX36580).
- The NAME of the product (IMAGE® 3.4C Recumbent Cycle).
- The SERIAL NUMBER of the product (see the front cover of this manual).
- The KEY NUMBER and DESCRIPTION of the part(s) from page 14 of this manual.

IMAGE® is a registered trademark of ICON Health & Fitness, Inc.

LIMITED WARRANTY

ICON Health & Fitness, Inc. (ICON), warrants this product to be free from defects in workmanship and material, under normal use and service conditions, for a period of ninety (90) days from the date of purchase. This warranty extends only to the original purchaser. ICON's obligation under this warranty is limited to replacing or repairing, at ICON's option, the product through one of its authorized service centers. All repairs for which warranty claims are made must be pre-authorized by ICON. This warranty does not extend to any product or damage to a product caused by or attributable to freight damage, abuse, misuse, improper or abnormal usage or repairs not provided by an ICON authorized service center, products used for commercial or rental purposes, or products used as store display models. No other warranty beyond that specifically set forth above is authorized by ICON.

ICON is not responsible or liable for indirect, special or consequential damages arising out of or in connection with the use or performance of the product or damages with respect to any economic loss, loss of property, loss of revenues or profits, loss of enjoyment or use, costs of removal, installation or other consequential damages of whatsoever nature. Some states do not allow the exclusion or limitation of incidental or consequential damages. Accordingly, the above limitation may not apply to you.

The warranty extended hereunder is in lieu of any and all other warranties and any implied warranties of merchantability or fitness for a particular purpose is limited in its scope and duration to the terms set forth herein. Some states do not allow limitations on how long an implied warranty lasts. Accordingly, the above limitation may not apply to you.

This warranty gives you specific legal rights. You may also have other rights which vary from state to state.

ICON HEALTH & FITNESS, INC., 1500 S. 1000 W., LOGAN, UT 84321-9813

Part No. 152462 H04459AC R0199B

Printed in Taiwan © 1999 ICON Health & Fitness, Inc.

IMAGE 3.4C

Model No. IMEX36580
Serial No. _____

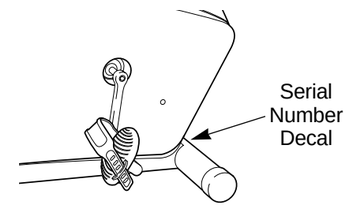

QUESTIONS?

As a manufacturer, we are committed to providing complete customer satisfaction. If you have questions, or if there are missing or damaged parts, we will guarantee complete satisfaction through direct assistance from our factory.

TO AVOID UNNECESSARY DELAYS, PLEASE CALL DIRECT TO OUR TOLL-FREE CUSTOMER HOT LINE. The trained technicians on our customer hot line will provide immediate assistance, free of charge to you.

CUSTOMER HOT LINE:
1-800-999-3756
Mon.–Fri., 6 a.m.–6 p.m. MST

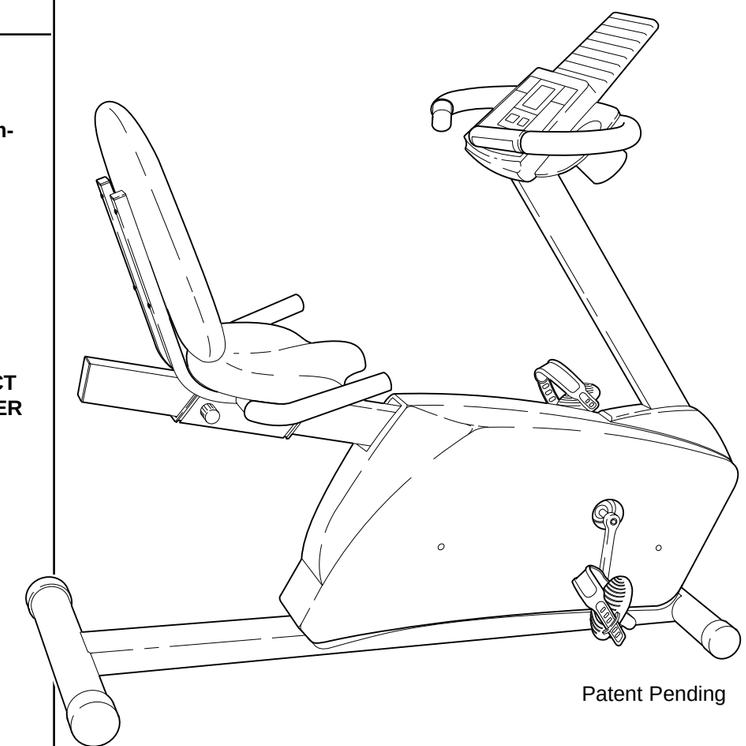

Patent Pending

CAUTION

Read all precautions and instructions in this manual before using this equipment. Keep this manual for future reference.

USER'S MANUAL

TABLE OF CONTENTS

IMPORTANT PRECAUTIONS 2
BEFORE YOU BEGIN 3
ASSEMBLY 4
HOW TO OPERATE THE RECUMBENT CYCLE 8
MAINTENANCE AND TROUBLE-SHOOTING 12
EXERCISE GUIDELINES 13
PART LIST 14
EXPLODED DRAWING 15
HOW TO ORDER REPLACEMENT PARTS . . . . . Back Cover
LIMITED WARRANTY . . . . . Back Cover

IMPORTANT PRECAUTIONS

WARNING: To reduce the risk of serious injury, read the following important precautions before using the exercise bike.

1. **Read all instructions in this manual before using the exercise bike. Use the exercise bike only as described in this manual.**
2. **It is the responsibility of the owner to ensure that all users of the exercise bike are adequately informed of all precautions.**
3. **Use the exercise bike indoors on a level surface. Keep the exercise bike away from moisture and dust. Place a mat under the exercise bike to protect the floor or carpet.**
4. **Inspect and tighten all parts regularly. Replace any worn parts immediately.**
5. **Keep children under the age of 12 and pets away from the exercise bike at all times.**
6. **The exercise bike should not be used by persons weighing more than 250 pounds.**
7. **Wear appropriate clothing and athletic shoes when exercising; do not wear loose clothing that could become caught on the exercise bike.**
8. **Always keep your back straight when using the exercise bike. Do not arch your back.**
9. **If you feel pain or dizziness while exercising, stop immediately and cool down.**
10. **The pulse sensor is not a medical device. Various factors, including the user's movement, may affect the accuracy of heart rate readings. The pulse sensor is intended only as an exercise aid in determining heart rate trends in general.**
11. **The exercise bike is intended for in-home use only. Do not use the exercise bike in a commercial, rental, or institutional setting.**
12. **CAUTION DECAL: The decal shown below has been placed on the exercise bike. If the decal is missing, or if it is not legible, please call our Customer Service Department toll-free at 1-800-999-3756 to order a free replacement decal. Apply the decal in the location shown.**

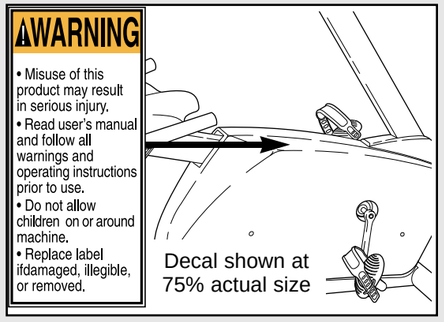

WARNING: Before beginning this or any exercise program, consult your physician. This is especially important for persons over the age of 35 or persons with pre-existing health problems. Read all instructions before using. ICON assumes no responsibility for personal injury or property damage sustained by or through the use of this product.

EXPLODED DRAWING—Model No. IMEX36580

R0199B

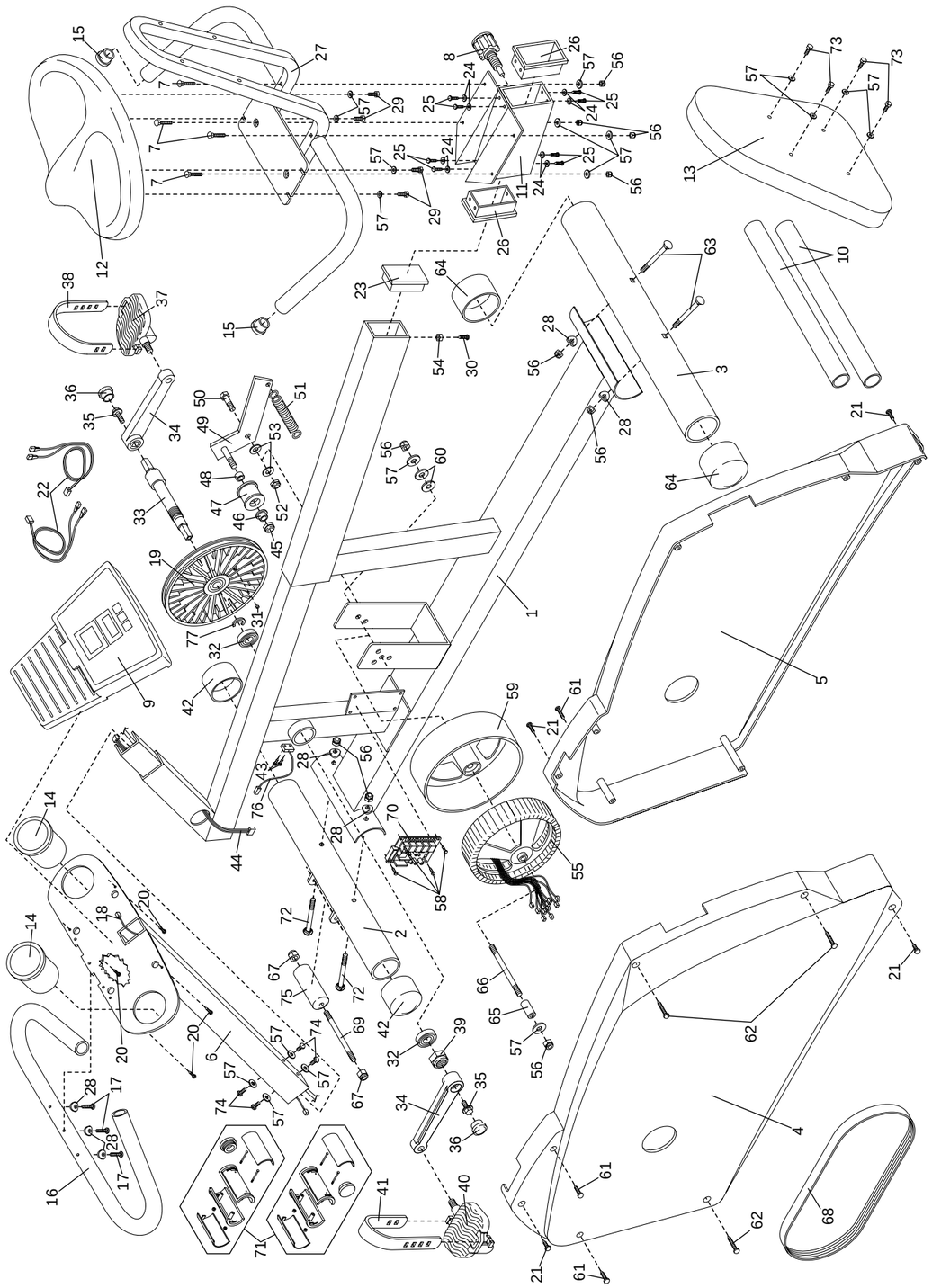

EXPLODED DRAWING—Model No. IMEX36580

R0199B

Key No.	Qty.	Description	Key No.	Qty.	Description	Key No.	Qty.	Description
1	1	Frame	31	1	Magnet	61	3	M4 x 44mm Screw
2	1	Front Stabilizer	32	2	Crank Bearing	62	3	M4 x 63.5mm Screw
3	1	Rear Stabilizer	33	1	Crank	63	2	M8 x 80mm Carriage Bolt
4	1	Left Side Shield	34	2	Crank Arm	64	2	Rear Stabilizer Endcap
5	1	Right Side Shield	35	2	M8 x 20mm Washer Screw	65	1	Axle Spacer
6	1	Upright	36	2	Crank Cap	66	1	Axle
7	4	M8 x 35mm Carriage Bolt	37	1	Right Pedal	67	2	M10 Black nylon Locknut
8	1	Seat knob	38	1	Right Pedal Strap	68	1	Belt
9	1	Console	39	1	Crank Nut	69	1	Roller Axle
10	2	Handlebar Foam	40	1	Left Pedal	70	1	Control Board
11	1	Seat Carriage	41	1	Left Pedal Strap	71	2	Pulse Handle Assembly
12	1	Seat	42	2	Front Stabilizer Endcap	72	2	M8 x 70mm Carriage Bolt
13	1	Seat Back	43	2	#4 x 3/8” Screw	73	4	M6 x 38mm Hex Screw
14	2	Cup Holder	44	1	Lower Wire Harness	74	4	M8 x 15mm Button Screw
15	2	Handlebar Endcap	45	1	M10 Nylon Jam Nut	75	1	Roller
16	1	Handlebar	46	1	Idler Bushing	76	1	Reed Switch Wire
17	3	M8 x 45mm Button Screw	47	1	Idler Wheel	77	1	“C” Clip
18	1	Extension Wire	48	1	Idler Spacer	#	1	User’s Manual
19	1	Pulley	49	1	Idler Arm	#	1	Allen Wrench
20	8	Console Screw	50	1	M10 x 26mm Bolt			
21	4	M4 x 25 Screw	51	1	Idler Spring			
22	2	Pulse Wire	52	1	M10 Nylon Locknut			
23	1	Frame Endcap	53	2	M10 Black Flat Washer			
24	8	Spring Washer	54	1	Nut			
25	8	#8 x 1/4” Screw	55	1	Armature			
26	2	Seat Carriage Bushing	56	10	M8 Nylon Locknut			
27	1	Seat Frame	57	18	M8 Black Flat Washer			
28	7	M8 Curved Washer	58	4	#8 x 5/16” Screw			
29	4	M6 x 15mm Hex Screw	59	1	Generator Housing			
30	1	#10 x 5/8” Screw	60	2	M8 Zinc Flat Washer			

Note: “#” indicates a non-illustrated part. Specifications are subject to change without notice. See the back cover of this manual for information about ordering replacement parts.

BEFORE YOU BEGIN

Congratulations for selecting the new IMAGE® 3.4C recumbent cycle. Cycling is one of the most effective exercises for increasing cardiovascular fitness, building endurance, and toning the entire body. The IMAGE® 3.4C offers an impressive array of features designed to let you enjoy this healthful exercise in the comfort and privacy of your home.

For your benefit, read this manual carefully before you use the IMAGE® 3.4C. If you have additional questions, please call our Customer Service Department toll-free at 1-800-999-3756, Monday through Friday, 6 a.m. until 6 p.m. Mountain Time (excluding holidays). To help us assist you, please mention the product model number and serial number when calling. The model number is IMEX36580. The serial number can be found on a decal attached to the IMAGE® 3.4C (see the front cover of this manual).

Before reading further, please familiarize yourself with the parts that are labeled in the drawing below.

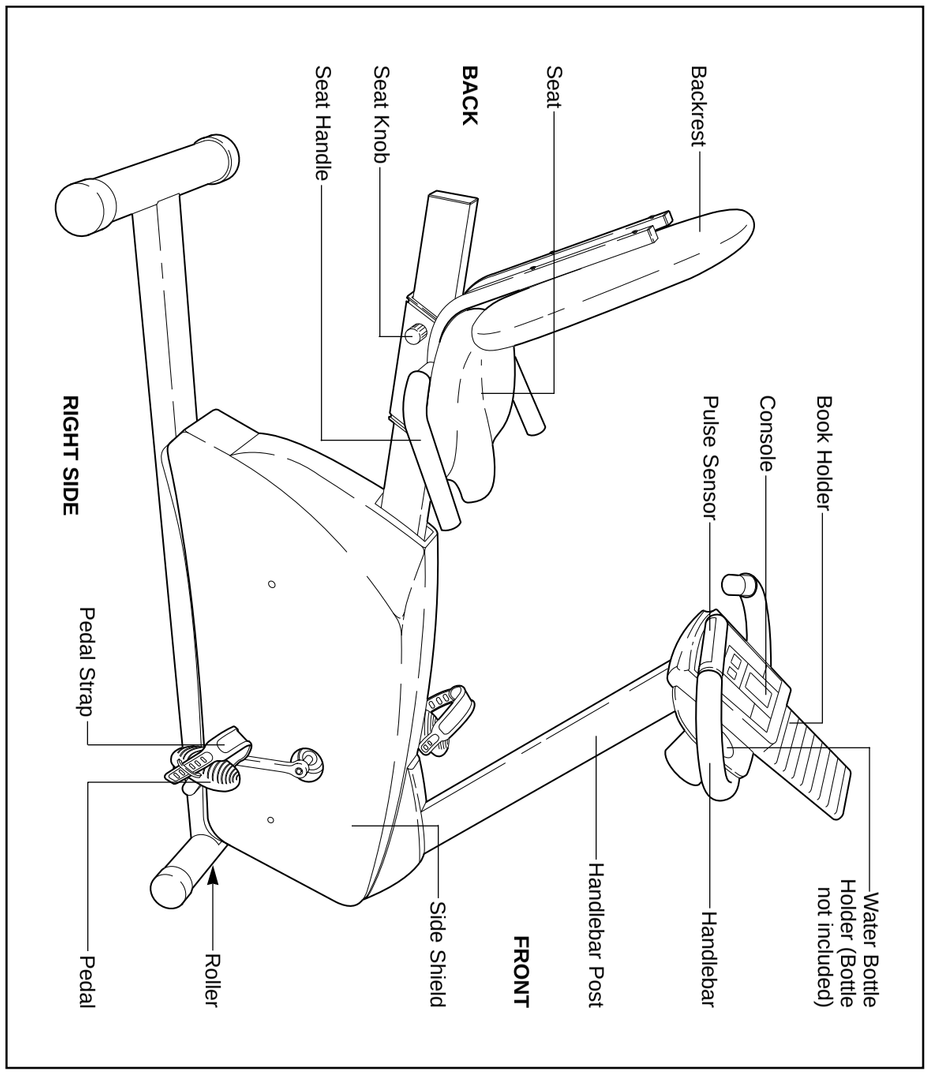

ASSEMBLY

Assembly requires two persons. Place all parts of the recumbent cycle in a cleared area and remove the packing materials. Do not dispose of the packing materials until assembly is completed.

Assembly requires the included tools and your own adjustable wrench **.**

PART CHART

Use the part drawings below to identify the small parts used in assembly. The number in parenthesis below each drawing refers to the key number of the part, from the PART LIST on page 14. The second number refers to the quantity used in assembly. **Note: Some small parts may have been pre-attached for shipping. If a part is not in the parts bag, check to see if it has been pre-assembled.**

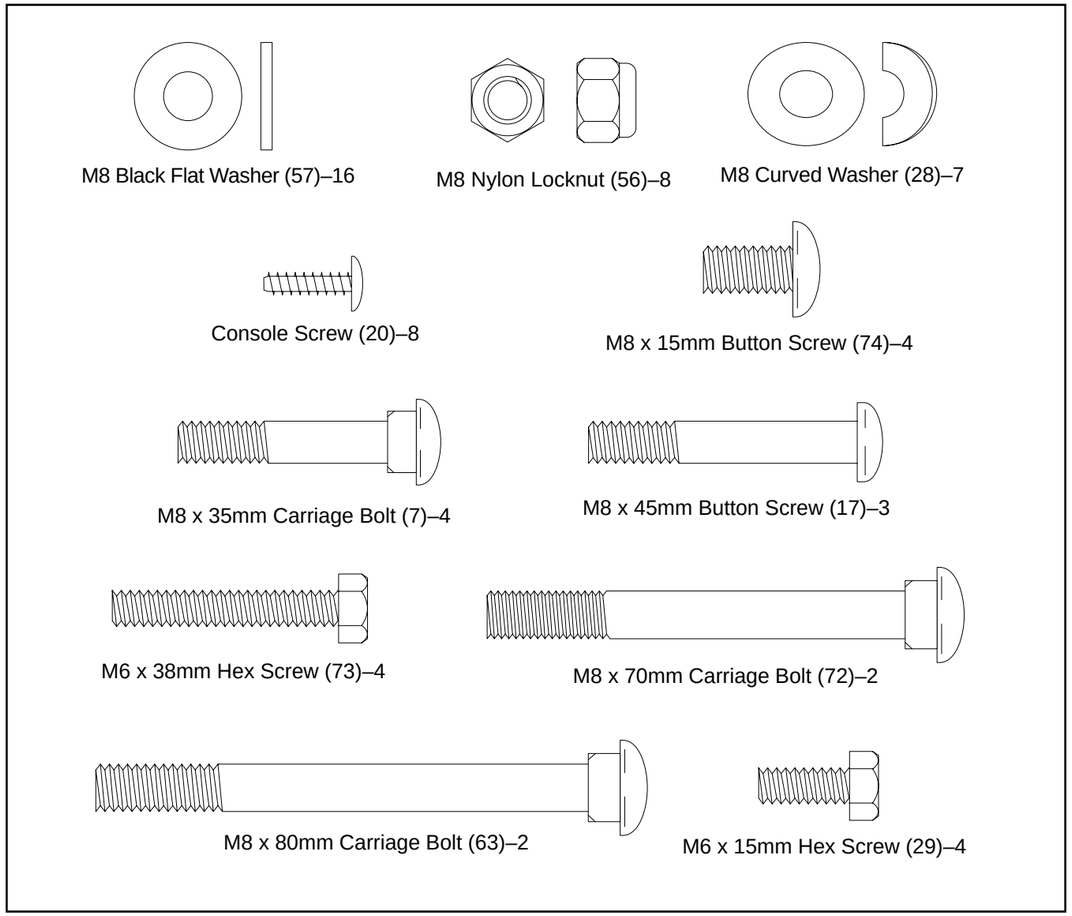

EXERCISE GUIDELINES

WARNING: Before beginning this or any exercise program, consult your physician. This is especially important for individuals over the age of 35 or individuals with pre-existing health problems.

WARNING: The pulse sensor is not a medical device. Various factors may affect the accuracy of heart rate readings. The pulse sensor is intended only as an exercise aid in determining heart rate trends in general.

Exercise has proven essential for good health and well-being. Regular participation in a well-rounded exercise program results in a stronger and more efficient heart, improved respiratory function, increased stamina, better weight management, increased ability to deal with stress, and greater self-esteem.

EXERCISE INTENSITY

To maximize the benefits of exercising, it is important to exercise with the proper intensity. The proper intensity level can be found by using your heart rate as a guide. For effective aerobic exercise, your heart rate should be maintained at a level between 70% and 85% of your maximum heart rate as you exercise. This is known as your training zone. You can find your training zone in the table below. Training zones are listed according to age and physical condition.

AGE	TRAINING ZONE (BEATS/MIN.)	
	UNCONDITIONED	CONDITIONED
20	138–167	133–162
25	136–166	132–160
30	135–164	130–158
35	134–162	129–156
40	132–161	127–155
45	131–159	125–153
50	129–156	124–150
55	127–155	122–149
60	126–153	121–147
65	125–151	119–145
70	123–150	118–144
75	122–147	117–142
80	120–146	115–140

During the first few months of your exercise program, keep your heart rate near the low end of your training zone as you exercise. After a few months of regular exercise, your heart rate can be increased until it is near the middle of your training zone as you exercise.

To measure your heart rate, use the built-in pulse sensor. You can also measure your heart rate by placing two fingers on your wrist as shown. Stop exercising and take a six-second heartbeat count. Multiply the result by ten to find your heart rate. (A six-second count is used because your heart rate drops quickly when you stop exercising.) If your heart rate is too high, decrease the intensity of your exercise. If your heart rate is too low, increase the intensity of your exercise.

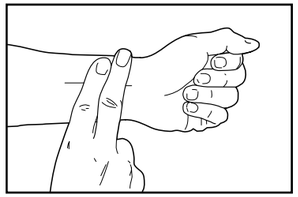

WORKOUT GUIDELINES

A well-rounded workout includes three important parts:

A warm-up, consisting of 5 to 10 minutes of stretching and light exercise. A proper warm-up increases your body temperature, heart rate, and circulation in preparation for exercise.

Training zone exercise, consisting of 20 to 40 minutes of exercising with your heart rate in your training zone. (During the first few weeks of your exercise program, do not keep your heart rate in your training zone for longer than 20 minutes.)

A cool-down, with 5 to 10 minutes of stretching. This will increase the flexibility of your muscles and will help to prevent post-exercise problems.

EXERCISE FREQUENCY

To maintain or improve your condition, plan three workouts each week, with at least one day of rest between workouts. After a few months of regular exercise, you may complete up to five workouts each week, if desired. **Caution: Be sure to progress at your own pace and avoid overdoing it. Incorrect or excessive training may result in injury to your health.**

Remember, the key to success is make exercise a regular and enjoyable part of your everyday life.

HOW TO SET A WORKOUT GOAL

If desired, you can set a workout goal before you begin exercising. If you set a time, distance, or calorie goal, the console will count down the goal as you exercise and sound a tone when the goal is reached. If you set a maximum or minimum heart rate goal, the console will sound a tone to alert you if your heart rate is too high or too low during your workout.

Follow the instructions below to set a goal. **Note: Do not set more than one type of goal at a time.**

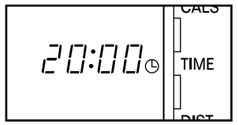

Time goal—Press the select button to select the time mode. Next, press the resistance buttons to set a time goal. Each button press will change the goal by 1 minute. After you have set a goal, the display will change back to the main display in six seconds.

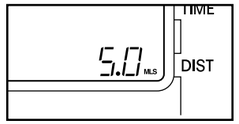

Distance goal—Press the select button repeatedly to select the distance mode. Next, press the resistance buttons to set a distance goal. Each button press will change the goal by 0.5 miles or kilometers.

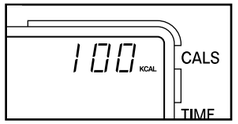

Calorie goal—Press the select button repeatedly to select the calorie mode. Next, press the resistance buttons to set a calorie goal. Each button press will change the goal by 10 calories.

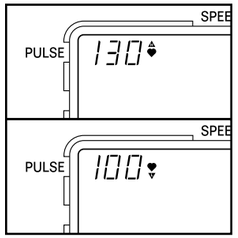

Heart rate goal—Press the select button repeatedly to select the maximum or minimum heart rate mode. Next, press the resistance buttons to set a heart rate goal. Each button press will change the heart rate goal by 5 beats per minute.

Note: To cancel a goal, press the resistance – button for three seconds. Any time that the button is pressed for three seconds, the display will be reset.

MAINTENANCE AND TROUBLESHOOTING

Inspect and tighten all parts of the recumbent cycle regularly. The recumbent cycle can be cleaned with a soft, damp cloth. To prevent damage to the console, keep liquids away from the console and keep the console out of direct sunlight.

BATTERY REPLACEMENT

If the console does not function properly, the batteries should be replaced. To replace the batteries, the handlebar must be removed. See assembly step 5 on page 6 to remove the handlebar. Next, refer to assembly step 4 to install batteries.

PULSE SENSOR TROUBLE-SHOOTING

- Avoid moving your hands while using the pulse sensor. Excessive movement may interfere with heart rate readings.
- If your heart rate is not shown when the pulse sensor is used, press the resistance – button to reset the pulse sensor.
- Do not hold the metal contacts too tightly; doing so may interfere with heart rate readings.
- For the most accurate heart rate reading, hold the metal contacts for about 15 seconds.
- For optimal performance of the pulse sensor, keep the metal contacts clean. The contacts can be cleaned with a soft cloth—never use alcohol, abrasives, or chemicals.

1. Attach the Front Stabilizer (2) to the front of the Frame (1) with two M8 x 70mm Carriage Bolts (72), two M8 Curved Washers (28), and two M8 Nylon Locknuts (56). Make sure that the Front Stabilizer is turned so the Roller (75) is not touching the floor.

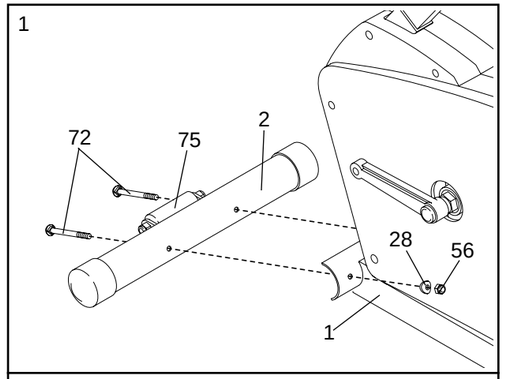

2. Attach the Rear Stabilizer (3) to the rear of the Frame (1) with two M8 x 80mm Carriage Bolts (63), two M8 Curved Washers (28), and two M8 Nylon Locknuts (56).

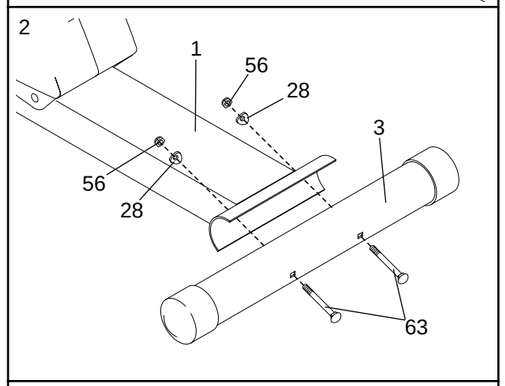

3. While a second person holds the Upright (6) near the Frame (1), connect the Extension Wire (18) to the Lower Wire Harness (44).

   Carefully slide the Upright (6) onto the Frame (1). **Be careful to avoid pinching the wires.** Attach the Upright with four M8 x 15mm Button Screws (74) and four M8 Black Flat Washers (57). **Important: Make sure that the Upright is turned exactly as shown at the right.**

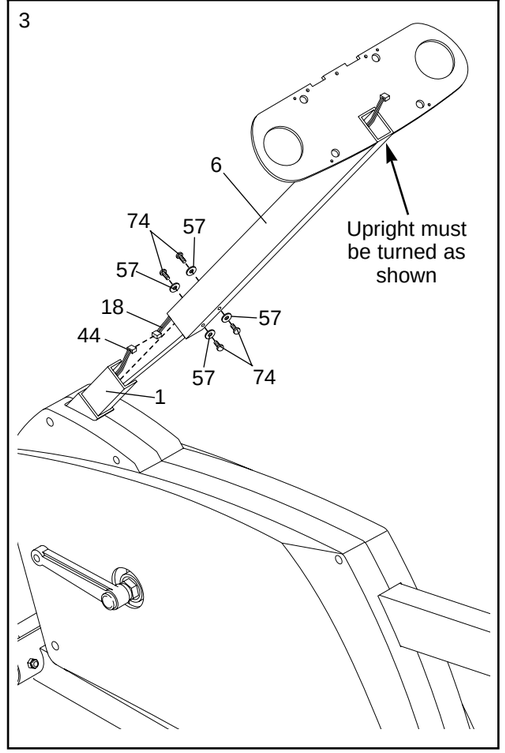

4. The Console (9) requires two “AA” batteries (not included); alkaline batteries are recommended. Refer to drawing A. Remove the four indicated screws and lift off the front of the Console. Press two batteries into the battery holder as shown in drawing B. Make sure that the negative (–) ends of the batteries are touching the springs. Re-attach the front of the Console. **Make sure that the three wires are extending from the back of the Console.**

   While another person holds the Console (9) near the Upright (6), connect the Extension Wire (18) to the console wire.

   Set the Console (9) on the Upright (6). Tighten four Console Screws (20) into the Upright and the Console.

5. While another person holds the Handlebar (16) near the Upright (6), connect the two Pulse Wires (22) to the corresponding wires on the Console (9) (refer to the inset drawing).

   Next, attach the Handlebar (16) to the Upright (6) with three M8 x 45mm Button Screws (17) and three M8 Curved Washers (28). **Make sure that the Pulse Wires (22) are not caught between the Handlebar and the Upright.**

6. Attach the Cup Holders (14) by firmly pushing them down into the indicated holes in the Upright (6) until they are seated fully.

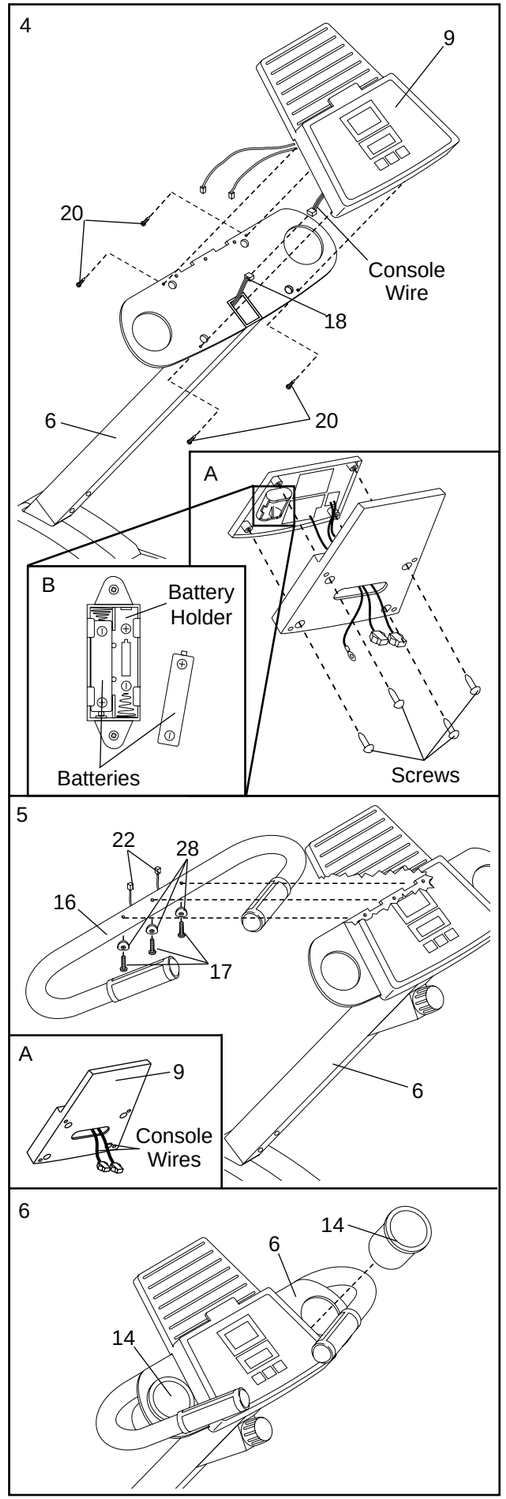

4 **Measure your heart rate if desired**

Refer to step 5 on page 10. **Note: If your heart rate is not shown, press the resistance – button to reset the pulse sensor.**

5 **When you are finished exercising, turn off the power**

To turn off the power, simply wait for about three minutes. If the pedals are not moved and the console buttons are not pressed for three minutes, the power will turn off automatically.

HOW TO USE A HEART RATE PROGRAM

1 **Turn on the power**

To turn on the power, press any button on the console or simply begin pedaling. Note: If batteries were just installed, the power will already be on.

2 **Enter your age into the console**

Before you use a heart rate program, you must enter your age into the console. To enter your age, first press the select button repeatedly until the letters “AGE” and a two-digit number appear at the bottom of the display. Next, press the resistance + or – button repeatedly to enter your age. After you have entered your age, the display will change back to the main display in six seconds.

3 **Select one of the heart rate programs**

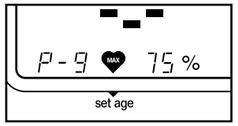

Each time the power is turned on, the manual program will be selected, as shown by the “P-1” in the display. To select one of the heart rate programs, press the program button repeatedly until a “P-7,” “P-8,” “P-9,” “P10” or “P11” appears in the display.

Each heart rate program is designed to keep your heart rate near a preselected percentage of your maximum heart rate while you exercise. (Your maximum heart rate is estimated by subtracting your age from 220. For example, if you are 30 years old, your maximum heart rate is 190.)

Program 7 (P-7) will keep your heart rate near 50% of your maximum heart rate while you exercise; P-8 will keep your heart rate near 60% of your maximum heart rate; P-9 will keep your heart rate near 75% of your maximum heart rate; P10 will keep your heart rate near 85% of your maximum heart rate; and P11 will keep your heart rate near 95% of your maximum heart rate.

4 **Place your hands on the pulse sensor**

See step 5 on page 10. **Note: If your heart rate is not shown, press the resistance – button to reset the pulse sensor.**

5 **Begin pedaling and follow your progress with the console display**

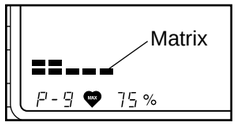

As you exercise, follow your progress with the matrix on the left side of the display. During the first ten seconds of the program, the first column of the matrix will flash. After ten seconds, the column will move to the right and the first column will continue to flash. At the end of every ten seconds, all columns will move to the right. In addition, the resistance of the pedals will automatically increase or decrease, if necessary, to keep your heart rate near the preselected level. As the resistance changes, the height of the flashing column will also change. After ten minutes, the program will be completed. **Important: For the heart rate program to function properly, you must keep your hands on the pulse sensor. If your heart rate is not displayed, see PULSE SENSOR TROUBLE-SHOOTING on page 12.**

Note: When a heart rate program is used, the resistance buttons will not function.

In addition to the matrix, the display will show your heart rate, your pedaling speed, the number of Calories you have burned, the elapsed time and the distance you have pedaled.

6 **When you are finished exercising, turn off the power**

To turn off the power, simply wait for about three minutes. If the pedals are not moved and the console buttons are not pressed for three minutes, the power will turn off automatically.

selected. To change the unit of measurement, first hold down the select button for three seconds. Press the resistance + or – button to change the unit of measurement. Note: If you select miles per hour, distance will be displayed in miles. If you select kilometers per hour or repetitions per minute, distance will be displayed in kilometers.

5 **Measure your heart rate if desired**

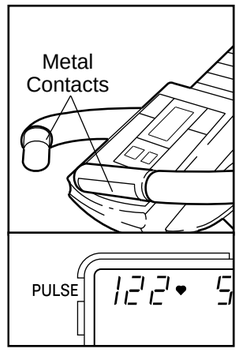

To use the pulse sensor, place your hands on the metal contacts. Your palms must be resting on the contacts closest to you and your fingers must be touching the other contacts. Avoid moving your hands. After a moment, the heart indicator in the display will begin to flash and your heart rate will be shown. For the most accurate heart rate reading, continue to hold the contacts for about 15 seconds. **WARNING: The pulse sensor is not a medical device. Various factors, including the user's movement, may affect the accuracy of heart rate readings. The pulse sensor is intended only as an exercise aid in determining heart rate trends in general.**

Note: If your heart rate is not shown, press the resistance – button to reset the pulse sensor. In addition, make sure that your hands are positioned as described above. Be careful not to move your hands excessively or squeeze the metal contacts too tightly.

6 **When you are finished exercising, turn off the power**

To turn off the power, simply wait for about three minutes. If the pedals are not moved and the console buttons are not pressed for three minutes, the power will turn off automatically.

HOW TO USE A RESISTANCE PROGRAM

1 **Turn on the power**

To turn on the power, press any button on the console or simply begin pedaling. Note: If batteries were just installed, the power will already be on.

2 **Select one of the resistance programs**

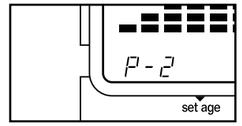

Each time the power is turned on, the manual program will be selected, as shown by the “P-1” in the display. To select one of the resistance programs, press the program button repeatedly until a “P-2,” “P-3,” “P-4,” “P-5” or “P-6” appears in the display.

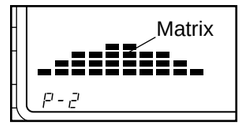

As you select each resistance program, the matrix will show the resistance settings of the program you have selected. If you select program 2, for example, the matrix will show that the resistance will gradually increase during the first half of the program and then gradually decrease during the last half of the program.

3 **Begin pedaling and follow your progress with the console display**

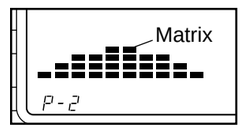

As you exercise, follow your progress with the matrix on the left side of the display. During the first minute of the program, the first column of the matrix will flash; during the second minute, the second column will flash; during the third minute, the third column will flash. In addition, the resistance of the pedals will automatically change according to the height of the flashing column—the higher the column is, the greater the resistance will be. After ten minutes, the program will be completed.

Note: If the program is too easy or too difficult, press the resistance + or – button to adjust the intensity level of the program. As you press the resistance + or – button, the height of the columns in the matrix will increase or decrease.

In addition to the matrix, the display will show your pedaling speed, the number of Calories you have burned, the elapsed time and the distance you have pedaled. The display will also show your heart rate when the pulse sensor is used (see step 4).

7. Attach the Seat Carriage (11) to the Seat Frame (27) using four M8 x 35mm Carriage Bolts (7), four M8 Black Flat Washers (57), and four M8 Nylon Locknuts (56).

8. Attach the Seat (12) to the Seat Frame (27) with four M6 x 15mm Hex Screws (29) and four M8 Black Flat Washers (57).

9. Attach the Backrest (13) to the Seat Frame (27) with four M6 x 38mm Hex Screws (73) and four M8 Black Flat Washers (57).

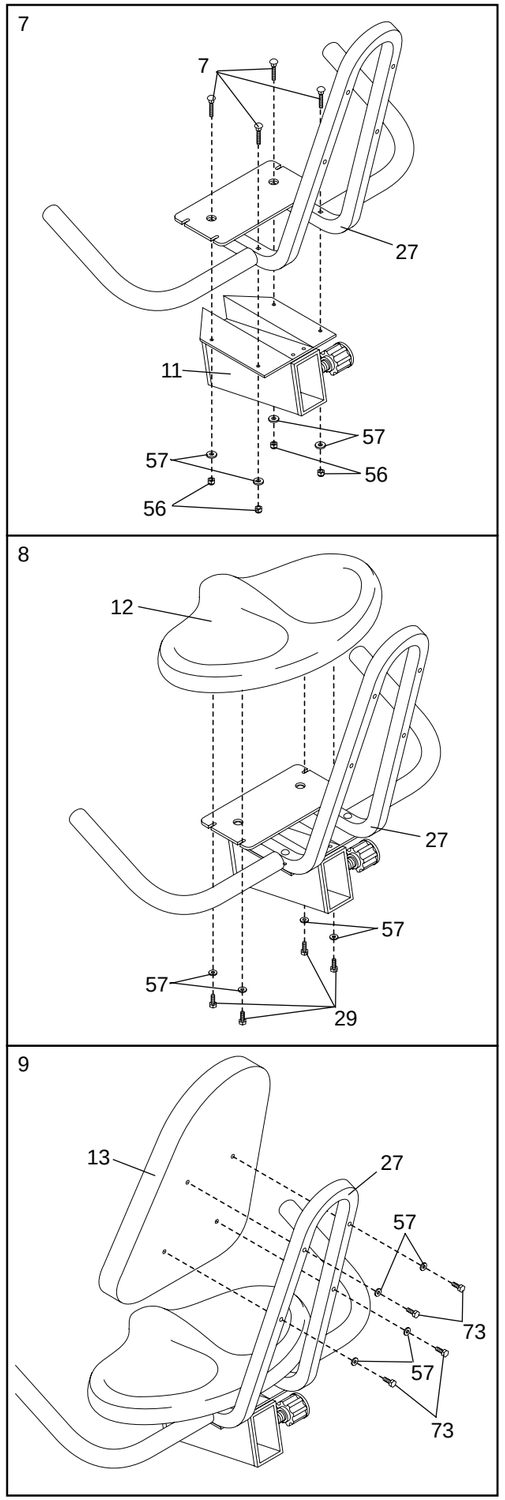

10. Turn the Seat Knob (8) counterclockwise two or three turns to loosen it (if the Seat Knob is not loosened enough, the Seat Knob may scratch the Frame [1]). Next, pull the Seat Knob and slide the Seat Carriage (11) onto the Frame (1). Move the Seat (12) to the desired position and release the Seat Knob. **Make sure to move the Seat Carriage back and forth slightly until it locks in position.** Then, turn the Seat Knob clockwise to tighten it.

    Attach the Nut (54) to the Frame (1) with the #10 x 5/8" Screw (30).

11. Identify the Left Pedal (40) (there is an "L" on the Left Pedal for identification). Using an adjustable wrench, tighten the Left Pedal counterclockwise into the left Crank Arm (34).

    Tighten the Right Pedal clockwise into the right Crank Arm (not shown).

    Adjust the Pedal Strap (41) on the Left Pedal (40) to the desired position. Press the Pedal Strap onto the tab on the Left Pedal. Adjust the Pedal Strap on the Right Pedal in the same manner (not shown).

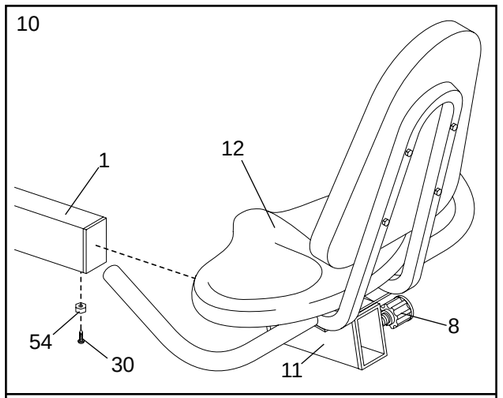

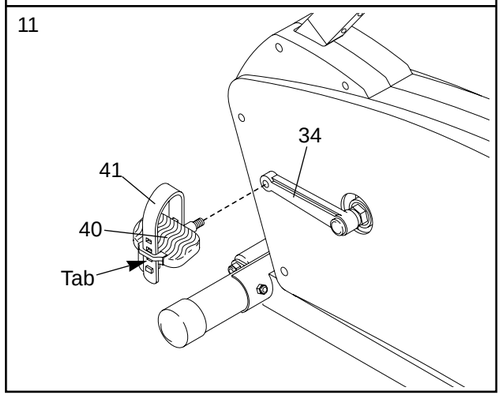

12. **Make sure that all parts are tightened before you use the recumbent cycle. Place a mat beneath the recumbent cycle to protect the floor.**

HOW TO OPERATE THE RECUMBENT CYCLE

HOW TO ADJUST THE POSITION OF THE SEAT

For effective exercise, the seat should be in the proper position. As you pedal, there should be a slight bend in your knees when the pedals are in the farthest position. **IMPORTANT: After you adjust the position of the seat, make sure that your knees will not hit the console when you pedal.** To adjust the seat, first turn the seat knob counterclockwise two or three turns to loosen it (if the seat knob is not loosened enough, the seat knob may scratch the frame). Next, pull the seat knob, slide the seat to the desired position, and release the seat knob. **Make sure to move the seat back and forth slightly until it locks in position.** Then, turn the seat knob clockwise to tighten it.

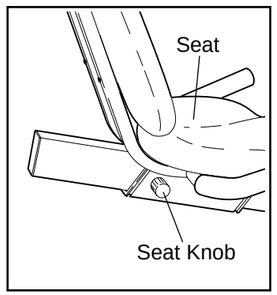

HOW TO ADJUST THE PEDAL STRAPS

To adjust the pedal straps, first pull the straps off the tabs on the pedals. Press the straps back onto the tabs using different holes in the straps.

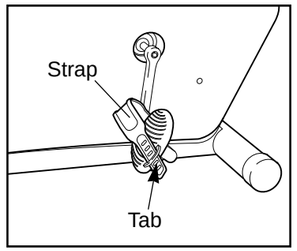

DESCRIPTION OF THE CONSOLE

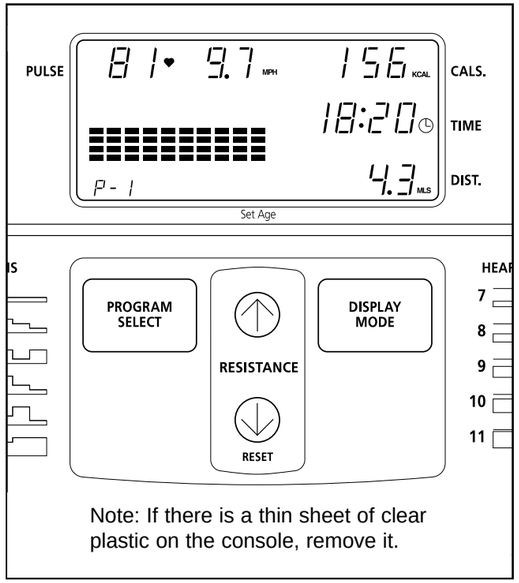

Note: If there is a thin sheet of clear plastic on the console, remove it.

The innovative console offers an impressive array of features to help you get the most from your workouts. When the manual program is selected, you can adjust the pedaling resistance with a touch of a button. As you exercise, the console will display your pedaling speed, the number of Calories you have burned, the elapsed time and the distance you have pedaled. You can even measure your heart rate using the built-in pulse sensor.

The console also offers ten preset workout programs. Five programs automatically change the pedaling resistance as they guide you through effective workouts, and five programs automatically adjust the pedaling resistance to keep your heart rate near a preselected level during your workouts.

Note: Before the console can be operated, two "AA" batteries must be installed. See assembly step 4 on page 6 for installation instructions.

HOW TO USE THE MANUAL PROGRAM

1 Turn on the power

To turn on the power, press any button on the console or simply begin pedaling. Note: If batteries were just installed, the power will already be on.

2 Select the manual program

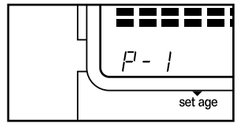

Each time the power is turned on, the manual program will automatically be selected, as shown by the "P-1" in the display. (P-1 is the manual program.) If you have selected a different program, select the manual mode again by pressing the program button repeatedly until the "P-1" reappears.

3 Begin pedaling and adjust the resistance of the pedals as desired

As you exercise, press the resistance + and – buttons to adjust the resistance of the pedals. Note: After the buttons are pressed, it may take a moment for the selected resistance setting to be reached.

4 Follow your progress with the console display

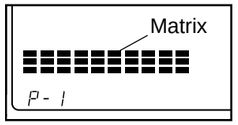

As you exercise, the matrix on the left side of the display will show your progress. During the first minute that you pedal, the first column of the matrix will flash; during the second minute, the second column will flash; during the third minute, the third column will flash, and so on, until the tenth column is flashing. After you have pedaled for ten minutes, the matrix will reset and the first column will begin to flash again.

The matrix will also show the resistance level of the pedals. As you press the resistance + or – button, the height of the columns in the matrix will increase or decrease.

In addition to the matrix, the display will show your pedaling speed, the number of Calories you have burned, the elapsed time and the distance you have pedaled. The display will also show your heart rate when the pulse sensor is used (see step 5).

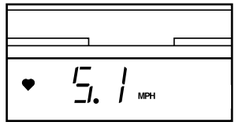

Note: The console can display speed in miles per hour, kilometers per hour or repetitions per minute. The letters "MPH," "KMH," or "RPM" will appear in the display to show which unit of measurement is