User manual

CONTENTS

2. Introduction 2

3. Getting Started 3

3.1. Opening and Charging 4
3.2. Installing the Application 6
3.3. Pairing and Connecting 7
3.4. Fishfinding 8
3.5. Sonar operational principles 10

4. The Application 12

4.1. Launch Screen 12
4.2. Main Screen 14
4.3. Menu 18
4.4. Calendar 20
4.5. Camera 22
4.6. Weather 24
4.7. Notes 26
4.8. Map 28
4.9. Share 30
4.10. Settings 32
4.11. Compatibility 36

5. The Gadget 38

5.1. Drawings 38
5.2. Maintenance 39
5.3. Specification 40

6. Troubleshooting 41

7. Contact Us 44

Guarantee 45

Legal Information 54

2. INTRODUCTION

We wish to thank you for purchasing Deeper and hope that you will enjoy using it as much as we have enjoyed creating it!

Please take your time to read this instruction manual which provides essential information on the usage of both the gadget and the application. We have also included various hints and tips that will help you make most out of your Deeper experience. Along the text you will find icons designed to draw your attention to different bits of information:

This icon marks useful hints about the usage of Deeper.

This icon marks safety precautions or information of similar importance.

3. GETTING STARTED

Before any use of the device, ensure you have read all the safety information provided in the separate leaflet.

This section provides you with quick step-by-step instructions from the moment you unpack your Deeper to your first fishfinding. Follow the diagrams along with the comments to start using the gadget.

Friday Lab, UAB is continuously developing this product, therefore illustrations in this manual may not look the same as your product but your unit will function in the same way. Please refer to the electronic manual provided with each mobile application update.

3.1. Opening and Charging

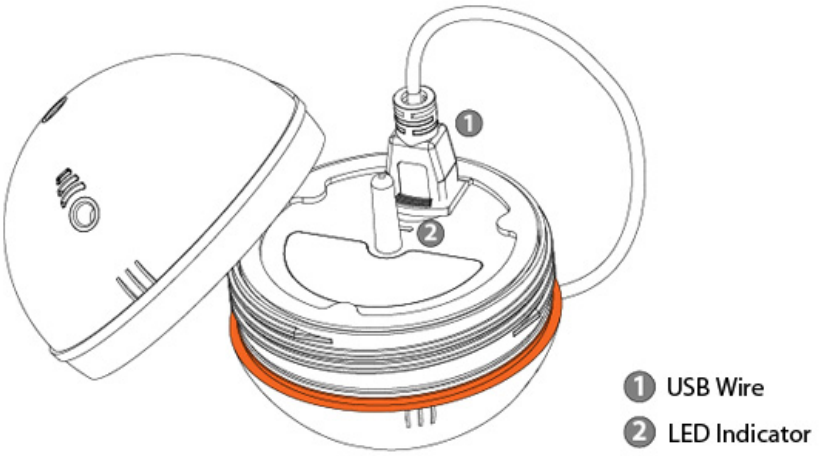

1. Ensure your Deeper gadget is dry before opening it.
2. Open the gadget by turning its top half counter-clockwise.
3. Connect the charger to the gadget with a provided cable.
4. Plug the charger to the mains or your car's power outlet.
5. Blinking frequency of the orange indicator represents the charging state. Higher number of blinks refers to higher charge level. Charging is complete whenever the indicator goes green.

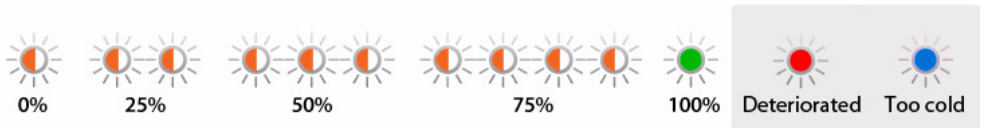

If the indicator glows red, your Deeper needs servicing. Please Refer to ’Guarantee’ on page 45 for further details.

The lithium-ion battery can not be charged at a temperature below 3°C (37.4°F). If the indicator glows blue, it is too cold to charge the Deeper.

Deeper is supplied with uncharged battery. To ensure full capacity of the battery, completely charge the battery before using Deeper for the first time. Expected charging time is 2 hours. The lithium-ion battery can be charged at any time without reducing its service life. Interrupting the charging procedures does not damage the battery. The voltage of the battery charger must correspond with the data given on the name plate of Deeper. Disconnect the battery charger from the mains supply when not using it for longer periods.

When Deeper is fully charged, the expected operational time is up to 4 hours when working with the 290 kHz (Refer to §3.5 on page 10) setting.

In order to increase the battery life of your Deeper, do not leave it uncharged for long periods of time. Even if you do not use your Deeper, recharge it every 2 months.

Lithium Ion batteries like the one used in the Deeper can be dangerous if handled inappropriately. Make sure you follow the charging and battery safety rules provided in the separate leaflet.

Do not charge Deeper while in the water. Protect the battery charger, dual USB car charger, the micro USB cable and the charging micro USB port against moisture.

3.2. Installing the Application

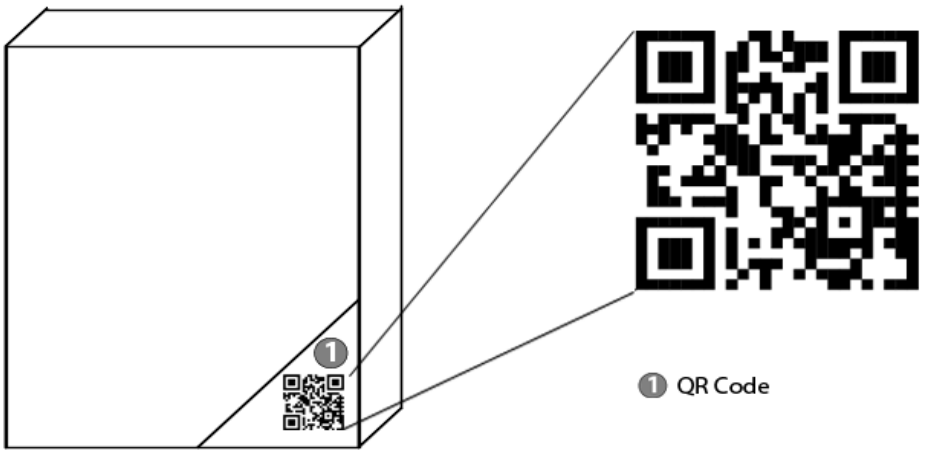

1. Scan a QR code, located on the retail package or go to the Google Play or the App Store online shop and search for the Deeper application.
2. Install the application just like any other by following on-screen instructions.

If you are not at the fishing spot yet but you can't wait to try out the features of your Deeper application, just launch it, go to settings and choose "Try". This will allow you to access most of the features of the application, also providing a demonstration of how the application displays sonar information when your Deeper is being reeled in at a fishing spot.

Refer to §4.11 on page 36 for a list of compatible devices.

3.3. Pairing and Connecting

Before using Deeper for the first time, it must be paired with your mobile device or a tablet as follows:

1. Ensure your Deeper is either charging or is immersed in water and so is automatically powered on.
2. Go to the Bluetooth settings of your mobile device and enable Bluetooth.
3. Choose 'Deeper' in your Bluetooth settings to pair and connect it to your device. Make sure, the distance to the gadget does not exceed 10 meters / ~36 feet, during pairing.
4. After the connection has been established successfully, return to the application.

You only need to pair your Deeper once. However, in some devices you may need to make the connection separately after pairing.

You can pair multiple Deeper gadgets to your mobile device and access any of them by selecting which gadget the application connects to in the application Settings (Refer to §4.10 on page 32). Only one connection can be established at a time.

If you are already at your fishing spot, attach your gadget to a fishing line before immersing it into water as instructed in the following section (§2.4).

3.4. Fishfinding

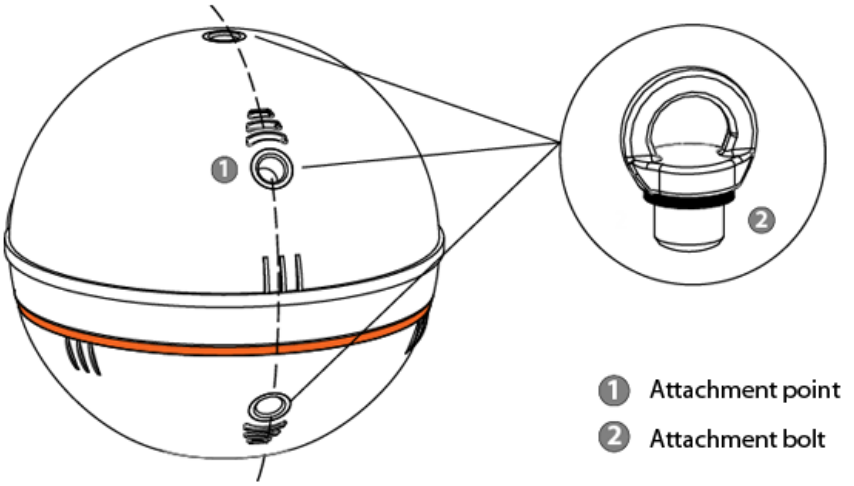

1. Ensure your gadget is tightly closed and **the attachment points are aligned as depicted in the diagram**.
2. Insert an attachment bolt into a suitable attachment point on your Deeper gadget, as chosen according to your planned angling conditions, fastening the bolt with 1.5 Nm torque.
3. Securely attach the fishing line to the inserted attachment bolt.
4. Cast connected gadget to the desired spot.
5. Launch the application and start fishfinding.
6. Either reel in your gadget for an overview or keep it stationary for fish monitoring.

Only attach your gadget to a sufficiently strong fishing line and use a suitable, properly tightened knot. Also ensure that your fishing pole withstand the weight of the Deeper. Otherwise you are at risk of losing the device, damaging the equipment or someone's property, or even causing an injury.

When reeling the device, ensure it glides smoothly on top of the water with its heavy side facing towards the bottom as this will result in the most accurate sonar view.

3.5. Sonar operational principles

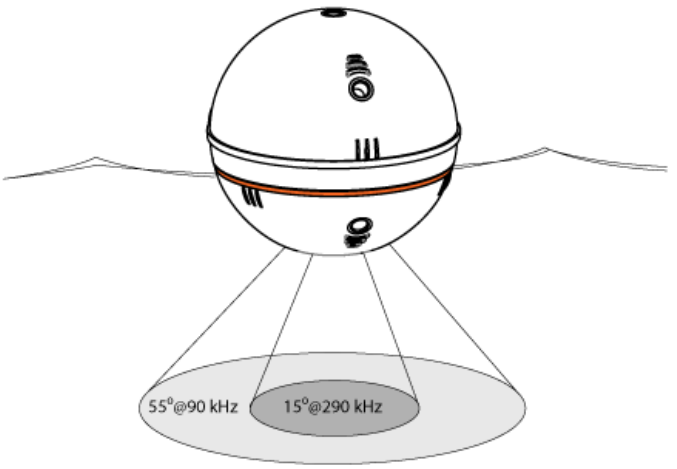

Deeper can be operated at two different frequencies (Dual Beam). Precise narrow beam (15^0@290kHz) is used for high accuracy returns of fish, structure, detail and bottom profile. Wide beam (55^0@90kHz) provides ample search area for fish, bait fish and bottom structure.

It is best to use the low frequency (90 kHz) setting to figure out, where the fish are and switch to the high frequency (290 kHz) setting to get more accurate information about fish position or bottom structure.

By default, Deeper is set to high frequency (290 kHz) setting, which is designed for best performance and longest battery life.

4. THE APPLICATION

4.1. Launch Screen

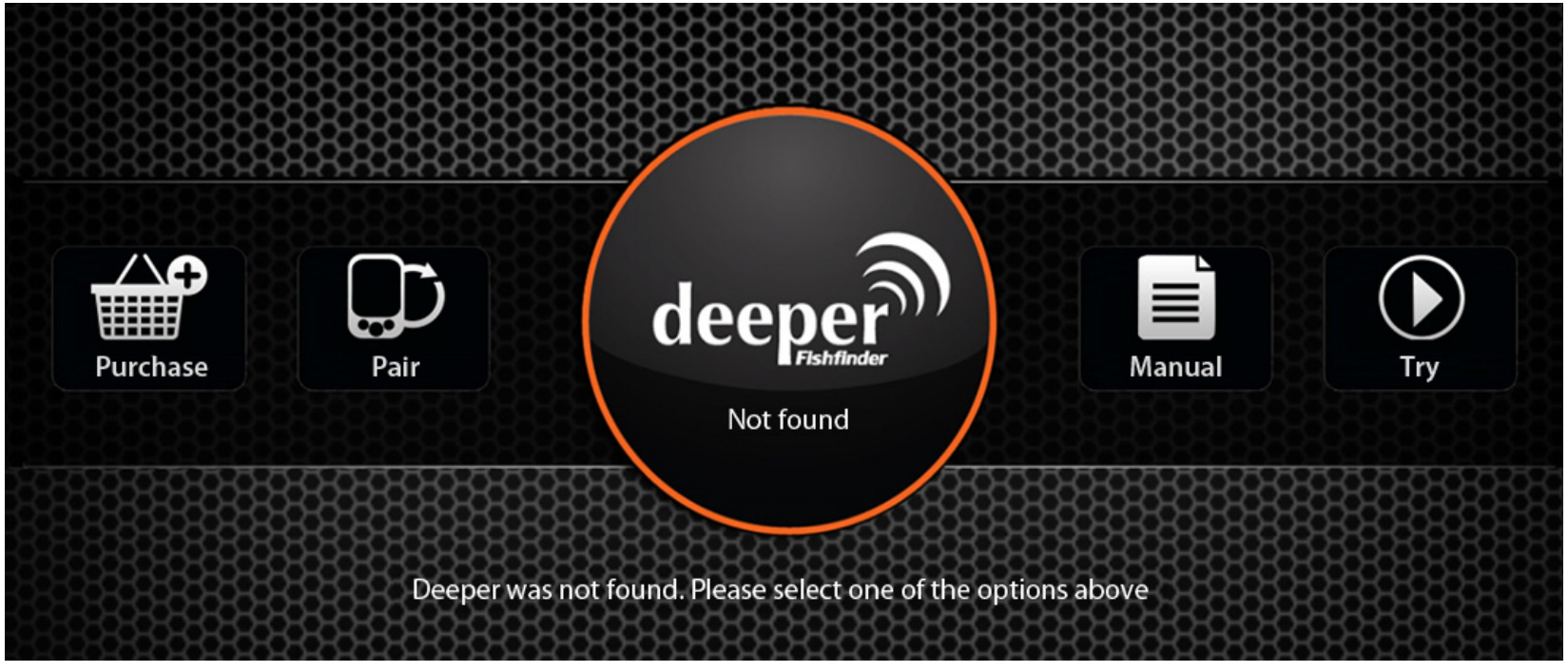

The first time you launch the application you will be taken to the launch screen. It displays the status of the connection with your Deeper and allows you to access various features listed below:

- "Buy" button links you to the Deeper official e-shop from which you can purchase the gadget itself, if you have not done this yet, its accessories and other items related to it.
- "Pair" button allows you to manage multiple Deeper gadgets that are paired with your mobile device or tablet.
- "Manual" button opens an electronic version of the instruction manual.
- "Try" button launches the main application screen allowing you to access most of the features of the application, also providing a demonstration of how the application displays sonar information when your Deeper is being reeled in at a fishing spot.

The screenshots provided in this manual may differ from the actual application as it is displayed by your device.

Some of the interface details might differ on smartphones and tablets.

4.2. Main Screen

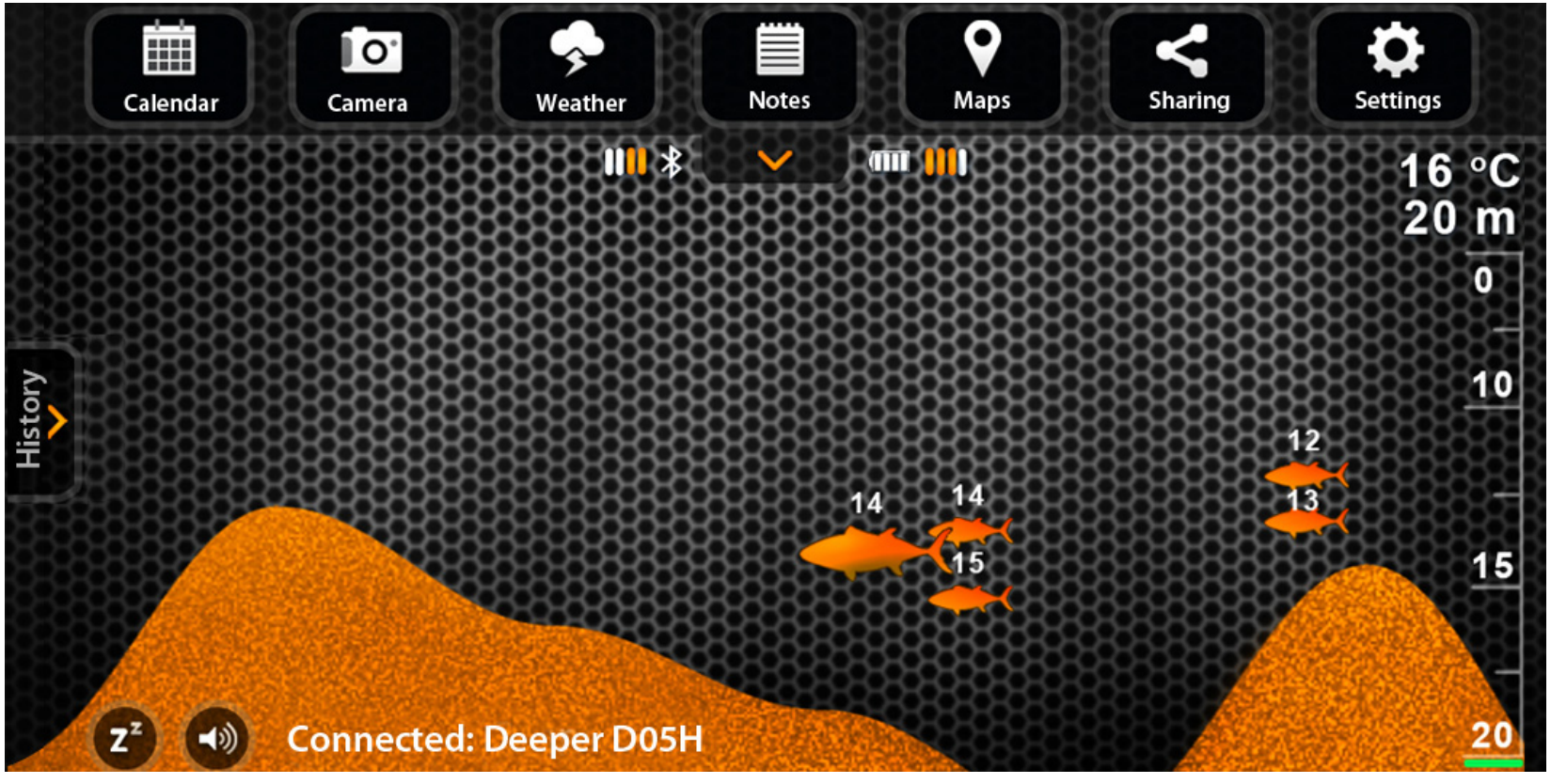

Bluetooth signal strength

Shows and hides the menu bar

Depth of a fish

Fish position and its relative size

Opens history of the sonar view

Mutes/Unmutes sounds

Battery level of the Deeper gadget

Water temperature and depth at the current gadget position

Self-adjusting depth scale

Floor

Puts the gadget into a low power consumption sleep mode or wakes it up

Status of the device

The main screen displays interpreted sonar information. The top of the screen corresponds to physical water surface at the closest proximity of Deeper. The bottom of the screen corresponds to the water depth.

The sonar picks up only what is underneath it. The right side of the screen displays more recent sonar scan information, the edge of it represents current information. Whenever new sonar information is received, the view is scrolled to the left.

The application stores history of the sonar data, which can be accessed by clicking on the history button. The history view can be manually scrolled, giving overview of all the information which was acquired during the last 15 minutes by default. This period can be changed in the settings.

The application also plays sound notifications when it spots a fish underneath the gadget or the depth changes according to your set values which can be accessed in the application settings. The sound notifications can be muted by the mute button.

Green light indicator blinks upon reception of data packages.

By using the sound notifications, you can observe the gadget itself while reeling it in and get a sense of real position of the fishes and features of the bottom. This can also serve as an incoming fish alarm when the gadget is kept stationary. Furthermore, when navigating with a boat you can use the minimum depth alarm to avoid getting grounded. However, this should only be used as an additional precaution.

4.3. Menu

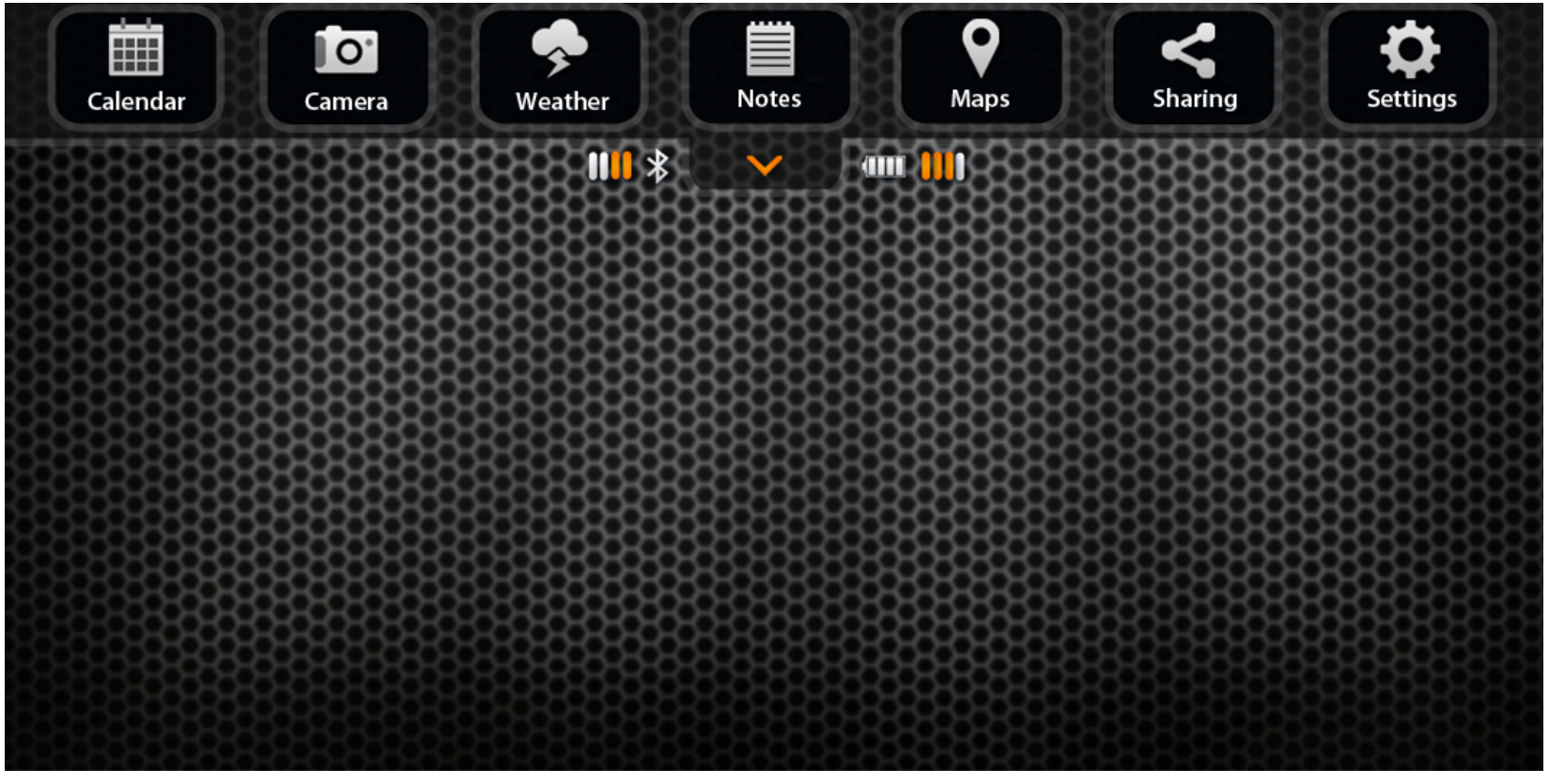

The menu of the main screen allows you to access various features of the application, as listed below:

- Calendar displays moon cycles and fish activity levels at your chosen fishing location.
- Camera feature allows you to take photos of your catch without leaving the application.
- Weather displays current weather conditions and forecast for your chosen fishing location.
- Logbook enables you to keep a fishing journal with notes and pictures.
- Map shows your current location and helps you find and manage fishing spots.
- Share feature allows you to quickly share pictures, comments and your location on social networks.
- Settings allow you to change set-up of your application and gadget.

4.4. Calendar

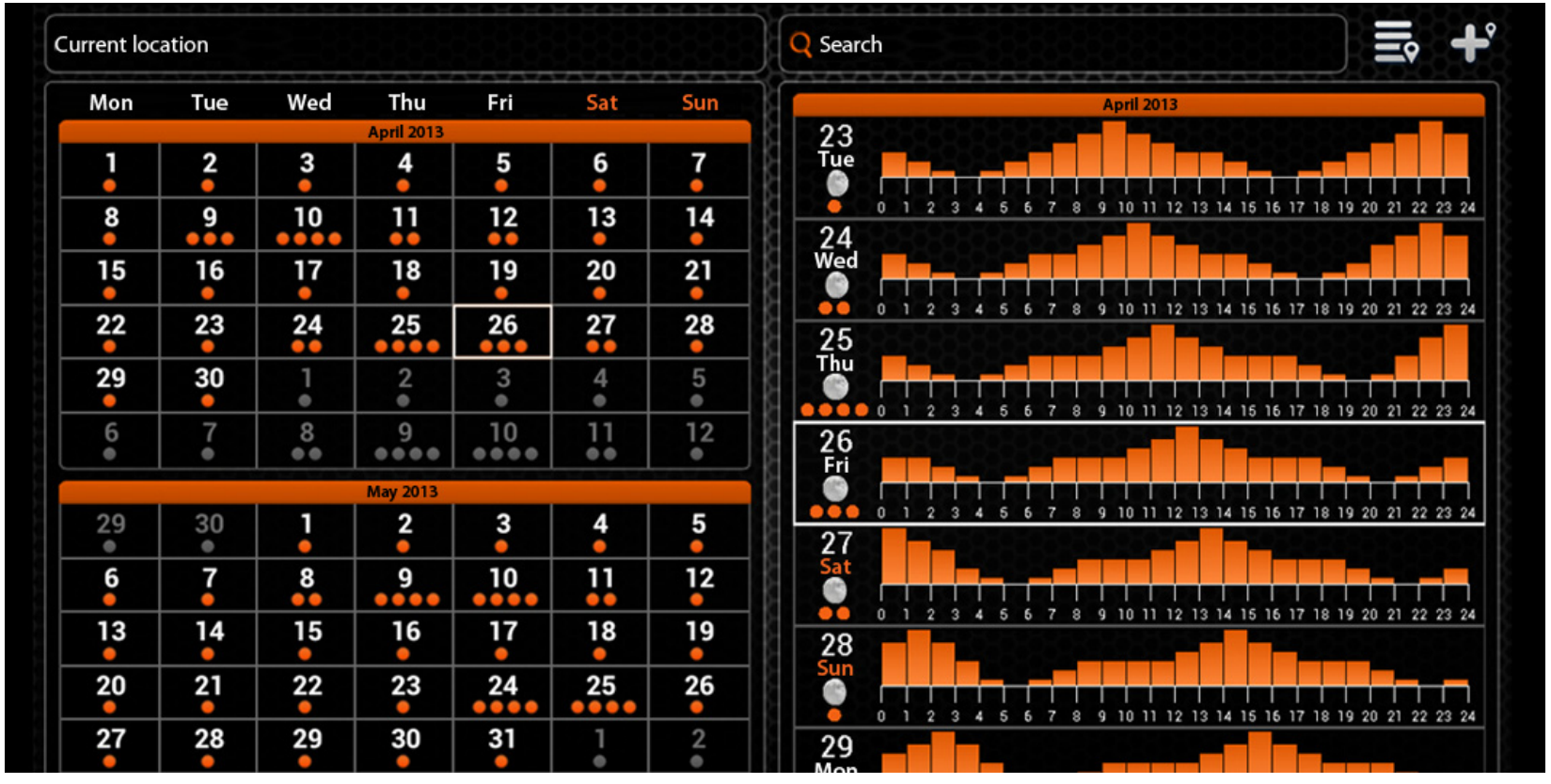
Current location
Search
Mon Tue Wed Thu Fri Sat Sun
April 2013
1 2 3 4 5 6 7
8 9 10 11 12 13 14
15 16 17 18 19 20 21
22 23 24 25 26 27 28
29 30 1 2 3 4 5
6 7 8 9 10 11 12
May 2013
29 30 1 2 3 4 5
6 7 8 9 10 11 12
13 14 15 16 17 18 19
20 21 22 23 24 25 26
27 28 29 30 31 1 2
April 2013
23 Tue
24 Wed
25 Thu
26 Fri
27 Sat
28 Sun
29
0 1 2 3 4 5 6 7 8 9 10 11 12 13 14 15 16 17 18 19 20 21 22 23 24

The Calendar provides you with information about fish activity levels and lunar phases for a chosen fishing location. The fish activity level for each day of the month is presented by the orange circles. By clicking on a particular day in the Calendar you can see the hourly fish activity levels. The higher the fishing activity level is the higher are the chances of a successful fishing.

On a GPS-enabled mobile device the Calendar will open showing information for your current position. You can check the fish activity levels for a particular location by using the search field or choosing it from your previously added fishing locations list. You can also add the location that you are currently viewing to this list.

Locations added through the Calendar will also appear in the Map and will be classified as fishing locations.

Location search

Locations list

Add location

4.5. Camera

The Camera function allows you to take photos without leaving the application and save their entries along with comments. Just aim and click the shutter icon to snap a photo. The flash can be disabled or enabled by clicking its icon.

Once you take a photo, a screen will appear where you can add a title, description and save the entry. You can also take additional photos by clicking on the camera icon or remove previous photos from this entry.

Saved photo entries will appear in the Notes along with the title, comments, date and weather conditions during which the photo was taken. The photo entry will also include the location at which it was taken if you are using a GPS enabled mobile device or a tablet.

Capture image

Disables/Enables flash

The photo entries can be shared on social networks by accessing them through the Notes.

4.6. Weather

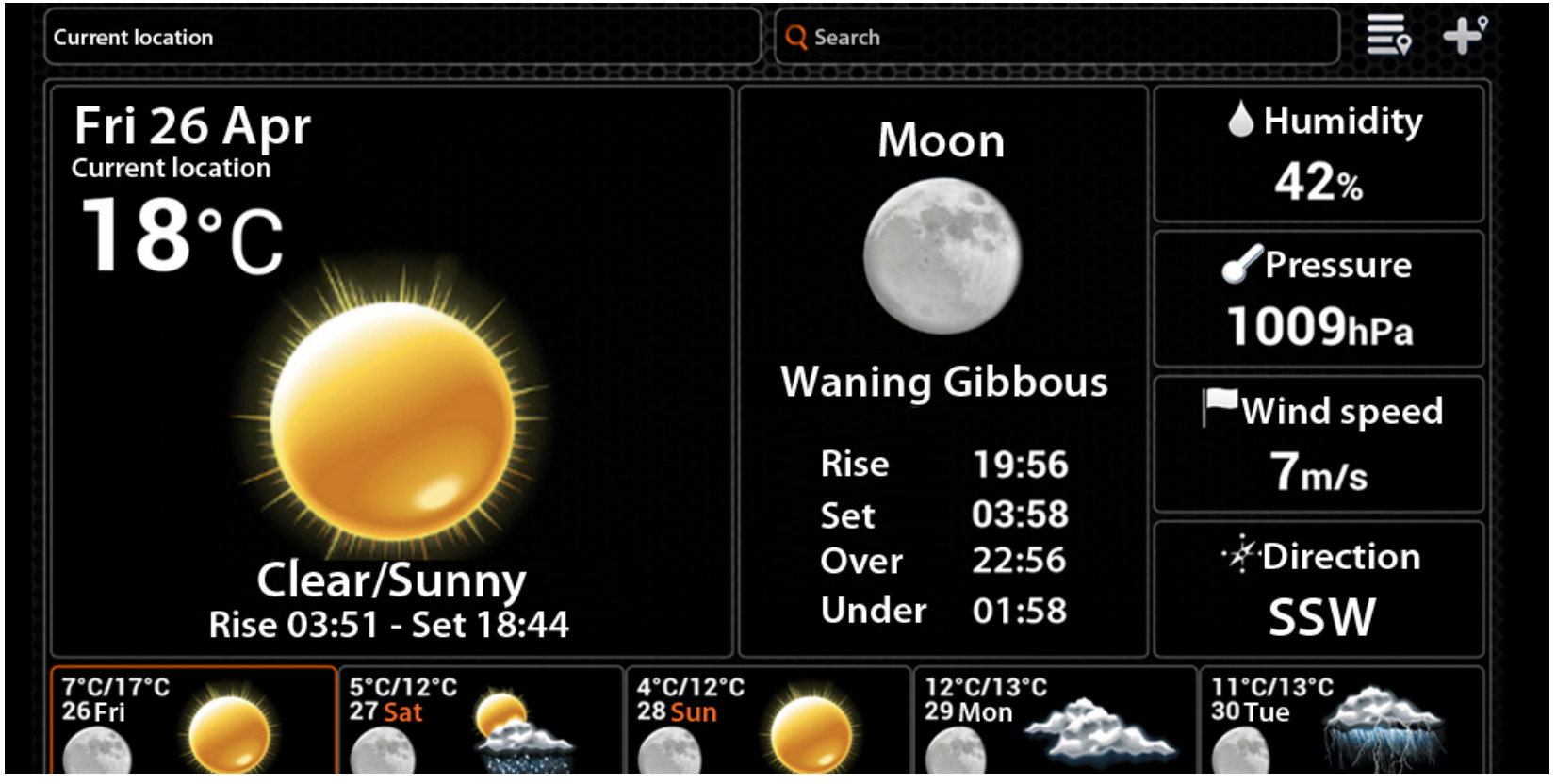
Current location
Search
Fri 26 Apr
Current location
18°C
Clear/Sunny
Rise 03:51 - Set 18:44
Moon
Waning Gibbous
Rise 19:56
Set 03:58
Over 22:56
Under 01:58
Humidity
42%
Pressure
1009hPa
Wind speed
7m/s
Direction
SSW
7°C/17°C
26 Fri
5°C/12°C
27 Sat
4°C/12°C
28 Sun
12°C/13°C
29 Mon
11°C/13°C
30 Tue

The Weather feature provides you with the current weather conditions and forecast for a certain location, along with other useful information such as rise and set times of the sun and the moon. On tablet devices, you can also access the detailed forecast for a certain day by clicking on it.

On a GPS-enabled mobile device the Weather will open showing information for your current position. You can check the weather of a particular location by using the search field or choosing it from your previously added weather locations list. You can also add the location you are currently viewing to this list.

Locations added through the Calendar will also appear in the Map and will be classified as weather locations.

Location search

Locations list

Add location

4.7. Notes

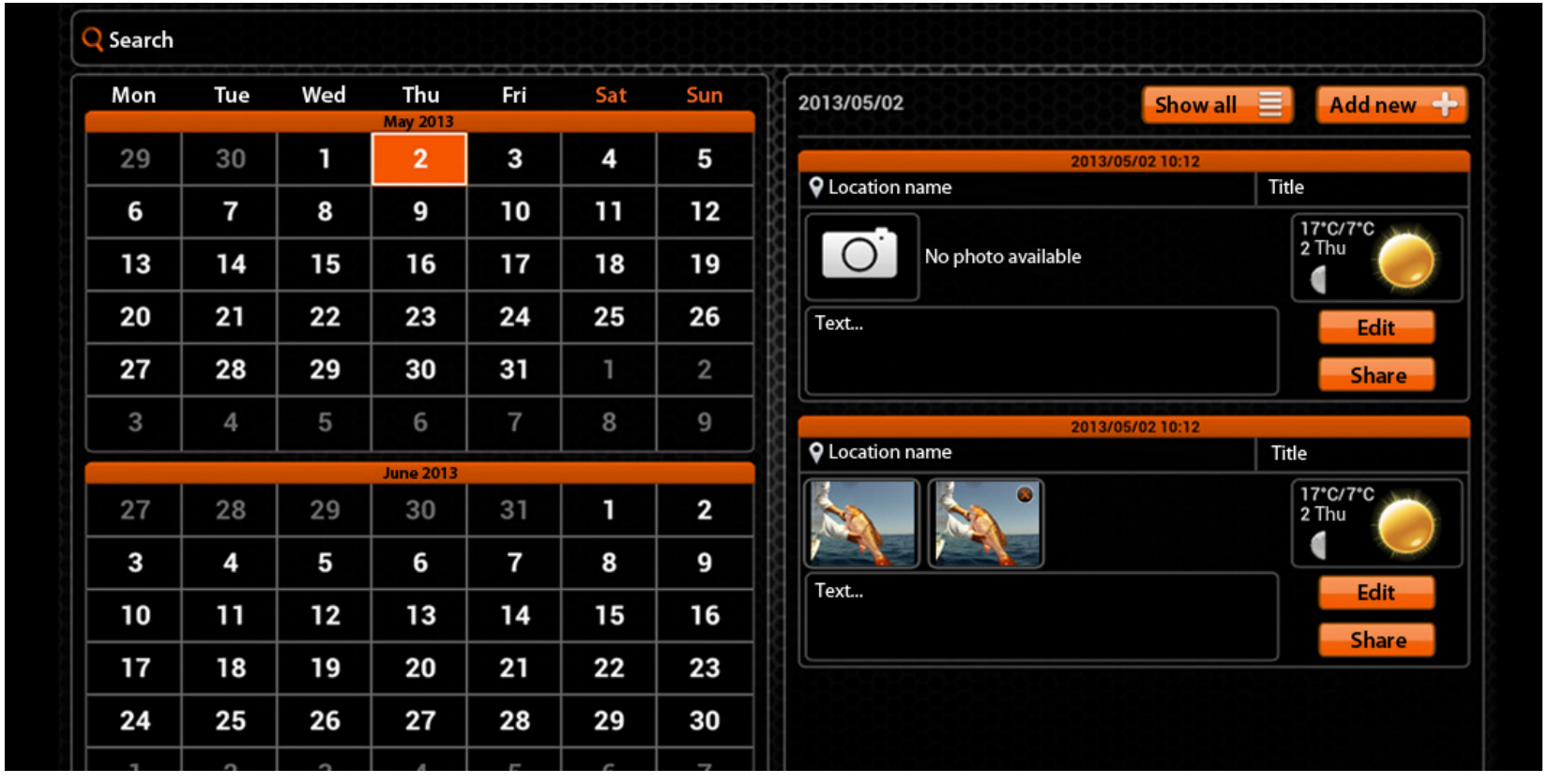
Search
Mon Tue Wed Thu Fri Sat Sun
May 2013
29 30 1 2 3 4 5
6 7 8 9 10 11 12
13 14 15 16 17 18 19
20 21 22 23 24 25 26
27 28 29 30 31 1 2
3 4 5 6 7 8 9
June 2013
27 28 29 30 31 1 2
3 4 5 6 7 8 9
10 11 12 13 14 15 16
17 18 19 20 21 22 23
24 25 26 27 28 29 30
2013/05/02
Show all
Add new
2013/05/02 10:12
Location name
Title
No photo available
17°C/7°C
2 Thu
Text...
Edit
Share
2013/05/02 10:12
Location name
Title
17°C/7°C
2 Thu
Text...
Edit
Share

The Notes feature allows you to keep a journal of fishing entries which are conveniently displayed on a calendar. Days containing note entries are displayed in orange. By clicking on a certain day, you can either view its existing entries or you can add new ones. Multiple log entries on the same date can be viewed by scrolling.

When forming a new entry, you can add a title and comments and take photos by clicking on the camera icon. The note entry also includes the weather conditions during which the entry was made and the location if you have a GPS enabled mobile device.

You can view the list of all of your Note entries, where you can edit an entry or share it on the social networks by clicking on the buttons next to it. An entry can be removed while editing it.

Notes list (tablet)

Add entry (tablet)

Add entry (smartphone)

Notes list (smartphone)

4.8. Map

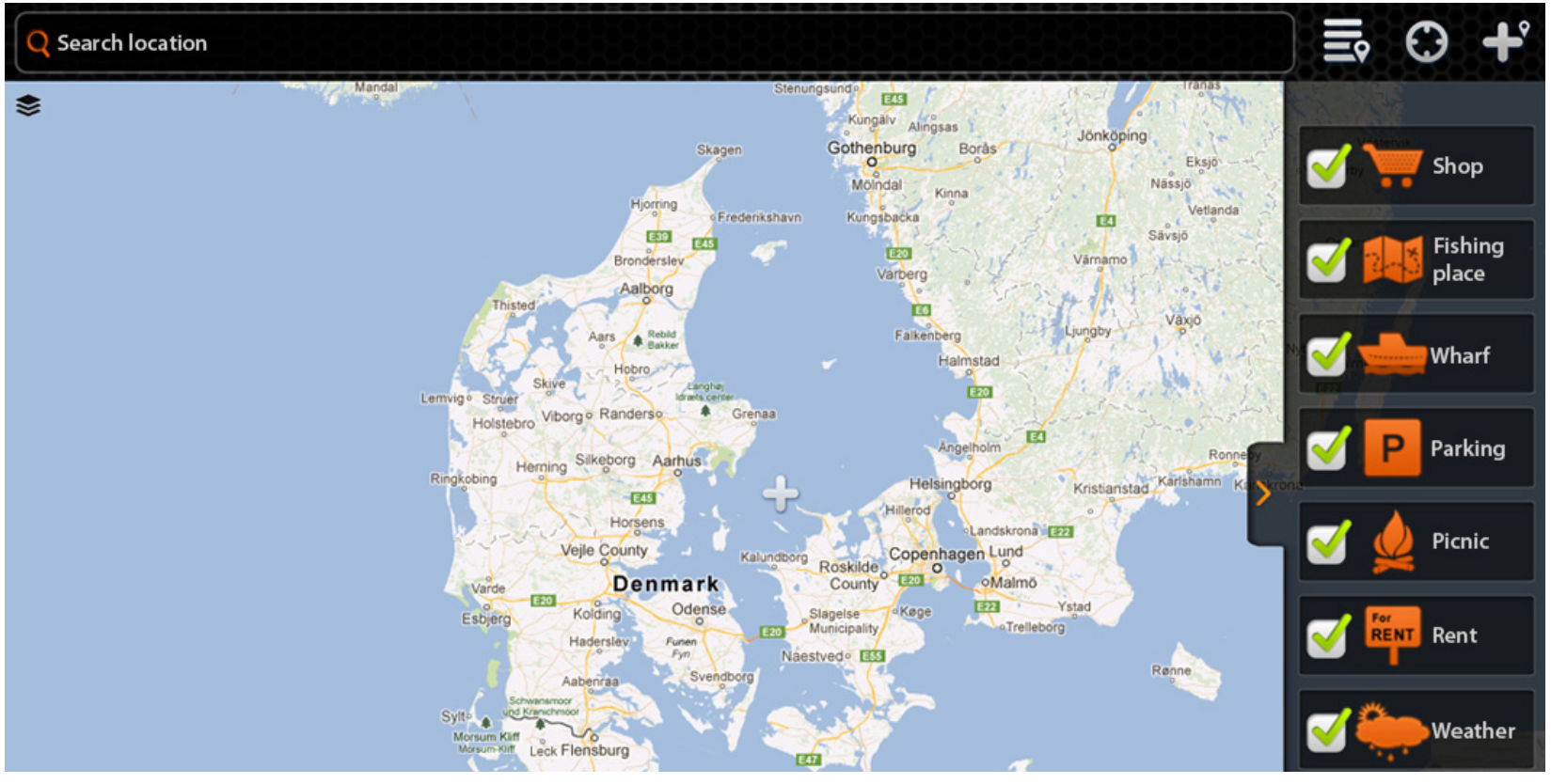
Search location
Shop
Fishing place
Wharf
Parking
Picnic
Rent
Weather
Denmark
Gothenburg
Copenhagen
Helsingborg
Aalborg
Aarhus
Odense
Flensburg
Roskilde County
Vejle County
Jönköping
Halmstad
Kristianstad
Malmö
Lund
Varberg
Kalundborg
Naestved
Svendborg
Esbjerg
Kolding
Horsens
Randers
Viborg
Silkeborg
Herning
Holstebro
Ringkobing
Hjorring
Frederikshavn
Skagen
Thisted
Aars
Hobro
Grenaa
Skive
Struer
Lemvig
Sylt
Leck
Mandal
Stenungsund
Kungälv
Alingsas
Borås
Mölndal
Kinna
Kungsbacka
Varnamo
Ljungby
Växjö
Eksjö
Nässjö
Vetlanda
Sävsjö
Ängelholm
Hillerod
Landskrona
Køge
Slagelse Municipality
Trelleborg
Ystad
Rønne
Karlshamn
Kungsbacka
Bronderslev
Aabenraa
Haderslev
Varde
Morsum Kliff

Google and the Google logo are registered trademarks of Google Inc., used with permission.

On a GPS-enabled mobile device the Map will open showing your current location. You can explore it for various points of interest by panning, zooming in and out using the usual touchscreen gestures. If you get lost on the map, you can always center the map on your current location. You can also switch between the map and satellite views by clicking on the icon on the left of the map.

You can search for new locations by using the search field or you can choose from your previously added locations list. The locations are categorized by type which you can choose every time you add a new location. You can filter the types shown on the Map by clicking on the arrow at the right side of the map and unticking the ones you wish to hide.

Location search

Locations list

Current location

Add location

4.9. Share

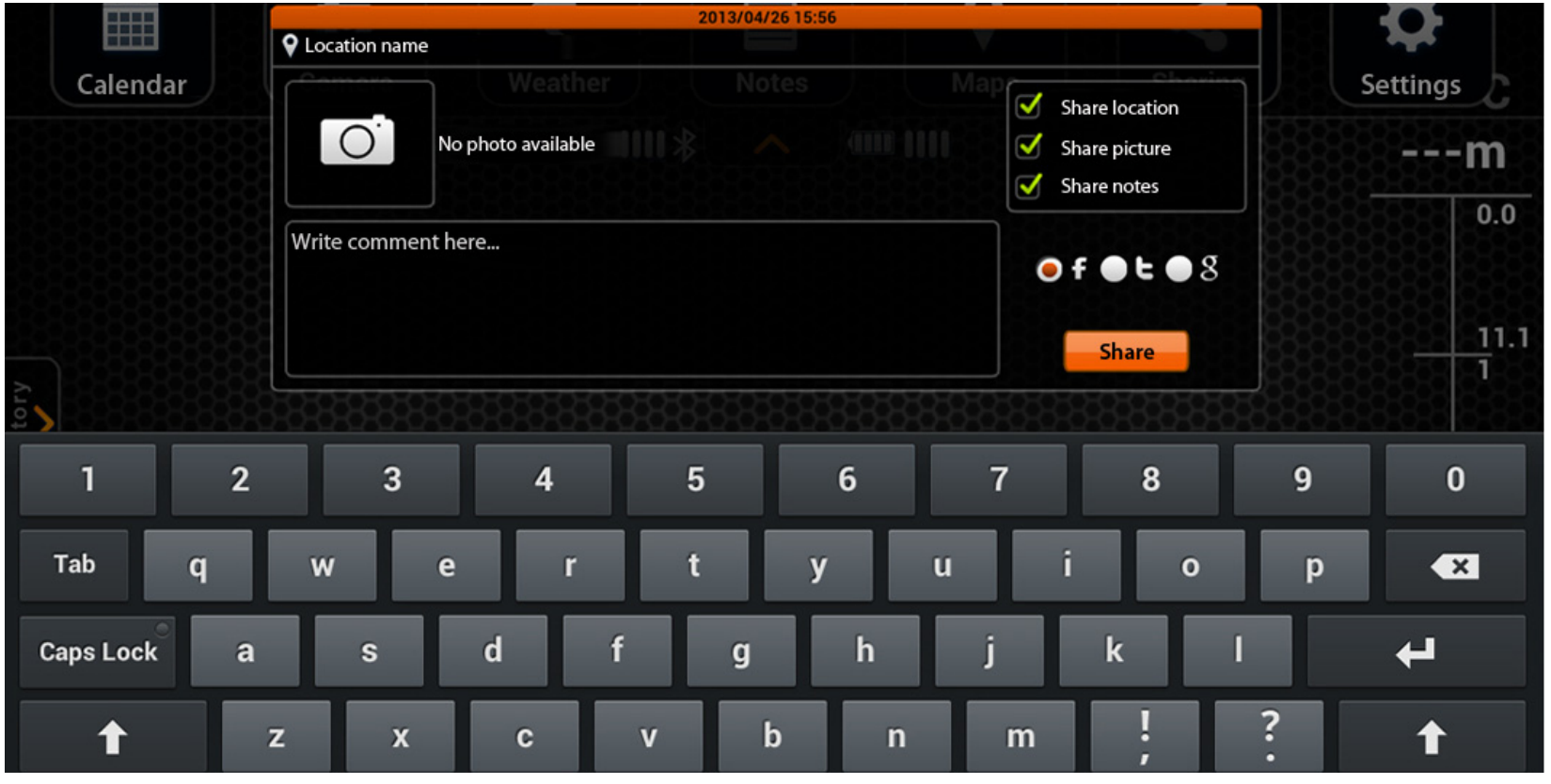
Calendar
2013/04/26 15:56
Location name
Weather
Notes
Settings
No photo available
Share location
Share picture
Share notes
Write comment here...
Share
---m
0.0
11.1
1
1 2 3 4 5 6 7 8 9 0
Tab q w e r t y u i o p
Caps Lock a s d f g h j k l
z x c v b n m

The Share feature of the application allows you to quickly post pictures and comments on the social networks.

You can take a picture that you want to share by clicking on the camera icon and following the usual procedure as described in the Camera section. You can then insert a comment in the provided field and choose between different social networks on which you want the post to be shared. The posts shared through this feature will not appear in the Notes feature.

The accounts of the social networks can be managed in the Settings (Refer to §4.10 on page 32).

Capture image

4.10. Settings

The Settings allows you to configure the Deeper application according to your needs.

GENERAL

- Units option allows you to change the units of the depth and temperature. You can choose from Metric (m, ^{O}C), Imperial (ft, ^{O}F) and Fathom (ftm, ^{O}F) units.
- Frequency option allows you to choose between two operating frequencies, which results in different ultrasound viewing angles.
- Depth Alarms enables and disables sound notifications, which are played when the water depth at the current gadget position falls below or exceeds the set values.
  a Minimum Depth Alarm sets the lower alarm trigger value. When the water depth measured by the device falls below this value, a sound notification is played.

b Maximum Depth Alarm sets an upper alarm trigger value. When the water depth measured by the device exceeds this value, a sound notification is played.

- Fish Alarm enables or disables sound notifications, which are played when the fish of a certain size is located at the gadget position. You can disable or enable alarms separately for small, medium or large fishes.
- Fish Depth enables or disables the depth indicators that are displayed over the fish icons.
- Data History sets the period of sonar information that is displayed in the history feature.
- Brightness changes the display brightness of your mobile or tablet device.
- Simulation button enables or disables demonstrational mode, which displays sonar information at the main screen when a Deeper gadget is not connected.

DEEPER

- Manage Deeper option allows you to manage connections of your Deeper gadgets that the application is paired to. For information about pairing Refer to §3.3 on page 7.

SOCIAL SETTINGS

Manages which social networks and their accounts the application uses for its share features. It displays the accounts that it is connected to and also allows logging in and logging out from them:

- Facebook Account
- Twitter Account
- G+ Account

MANUAL

- Read Manual option opens an electronic version of this manual.
- About the program option opens the information of the application version.

BACKUP

Allows you to backup the application data using cloud services. The backup includes note entries along with photos, added locations and settings.

- Import the backup data.
- Export the backup data.

4.11. Compatibility

The Deeper gadget is confirmed to be compatible with the following mobile devices or tablets:

Made for	iOS Version
iPad (4th generation), iPad (3rd generation), iPad 2, iPad	iOS 5.0 and later versions
iPhone 4S, iPhone 4, iPhone 3GS	iOS 5.0 and later versions
iPhone 5	iOS 6.0 and later versions
iPad mini	iOS 6.0 and later versions
iPhone 5s, iPhone 5c	iOS 7.0 and later versions
iPad air	iOS 7.0 and later versions

The Deeper gadget is compatible with most Android devices that meet the following requirements:

Device	Android OS version	Screen size
Smartphones	2.3 and later versions	mdpi-normal, hdpi-normal, xhdpi-normal
Tablets	3.0 and later versions	mdpi-xlarge

We are working very hard to support as many devices and software versions as we can, but if you have a custom ROM for your Android device or a jailbroken iPhone you may experience issues that we have not accounted for in the public release. The list of compatible devices is being updated all the time, so if your device is not on the list - do not panic! Most probably it will be on the list very soon. Also if you are having some issues, please let us know and we will try to sort it out.

5. THE GADGET

5.1. Drawings

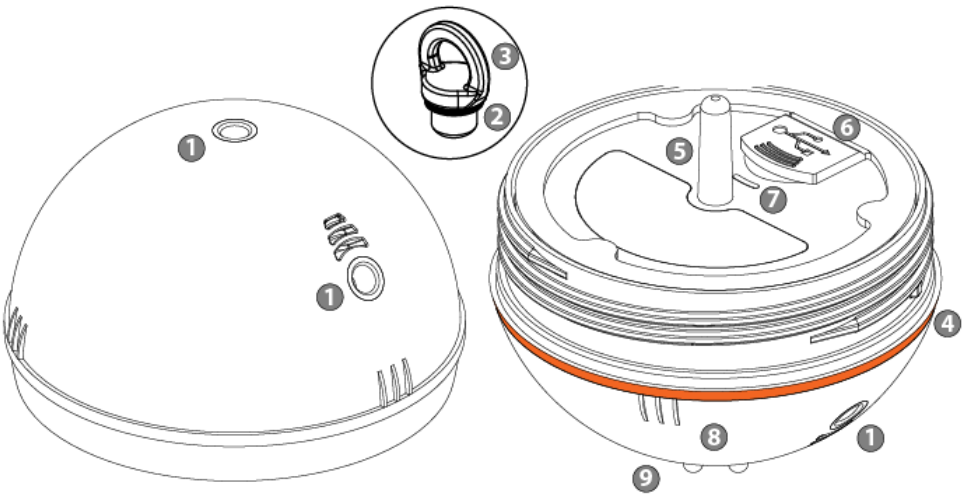

1. Attachment points
2. Attachment bolt seal
3. Attachment bolt
4. Main seal
5. Antenna
6. Micro USB connection
7. LED status indicator
8. Sonar active face
9. Water sensor contacts

5.2. Maintenance

The Deeper gadget has been designed in a way to minimize any required user maintenance. However, reasonable care procedures should be followed:

- Regularly check the condition of the orange main seal. If the seal is damaged, replace it immediately with a new one.
- Wipe off any remaining water from the gadget after each use
- Regularly clean the gadget from dirt, dust, salt residue or any organic growth that may form over long usage. Avoid plastic solvents.
- When fishing under freezing conditions, clean any ice from the gadget and especially from its sonar active face as this may result in inaccurate sonar information
- Always keep your Deeper battery charged. Even if you do not use your Deeper, recharge it every 2 months.

Ensure you follow the safety rules provided in the separate leaflet.

5.3. Specification

Unit size	Diameter 6.5 cm (2.55 in)
Weight	100 g (0.22 lb)
Connection	Wireless Bluetooth
Bluetooth range	Up to ~50 meters (160 feet)
Depth range Max. / Min.	~40 meters (130 feet) / ~0.5 meters (2 feet)
Construction	Water tight, ABS
Operational temperature	-20 ^{O}C to 40 ^{O}C (-4 ^{O}F to 104 ^{O}F)
Sonar type	Dual beam
Frequency	290 kHz (15^{0}) / 90 kHz (55^{0})
Battery	Lithium polymer 3.7 V rechargeable
Power adapter	110 V ~ 240 V Micro USB cable

6. TROUBLESHOOTING

This section provides you with the typical troubleshooting scenarios. When troubleshooting, try the uppermost solutions first:

Q: The application does not connect to my Deeper gadget as displayed by the status bar

A: Your Deeper gadget may simply be powered off. It automatically powers on when it is submersed in water. Cast the gadget into water or immerse it in any other water reservoir and it should connect to the application automatically.

A: The battery of your Deeper gadget may be low. Plug in the charger (Refer to §3.1 on page 4) which will also automatically power your Deeper gadget on and it should connect to the application automatically. Wait until it is sufficiently charged and you can return to your fishing.

A: The Deeper gadget may not be paired with your mobile device or tablet. This may occur even if you had previously carried out the pairing procedure in a case when certain changes were made to the software of your mobile device. Pair the Deeper gadget (Refer to §3.3 on page 7) and the application should automatically connect to it.

A: Your Deeper might be too far from your mobile device or there may be obstructions in the way of the

Bluetooth signal. Try reducing the distance or remove the obstructions if you can and the connection should be automatically established.

A: The water sensing contacts may be dirty and prevent the gadget from powering on. Wipe the contacts (Refer to §5.1 on page 38), immerse the gadget into the water and it should connect to the application automatically.

Q: I am getting intermittent sonar view

A: Your Deeper gadget might be jumping on top of the water while you are reeling it in. This may be caused by reeling too fast or by an improperly chosen attachment point (Refer to §3.4 on page 8).

A: Your Deeper gadget might be too far from too far from your mobile device, water waves might be periodically blocking the Bluetooth signal or there may be obstructions in the way of it. Try reducing the distance or remove the obstructions if you can.

Q: The Weather feature does not connect to the internet and/or shows old forecast.

A: The application requires internet connection to operate fully. In your mobile device settings, enable the internet connection which may be provided either by mobile services or a local Wi-Fi. You may also be no longer in the coverage zone of these services if you had recently changed your position. Return to the coverage zone and try again.

Q: The Map is blank, displaying only my current and saved locations.

A: Refer to the previous solution.

Q: The Share function does not work.

A: Refer to the previous solution.

Q: In the Settings, I cannot log in to my social network account.

A: Refer to the previous solution.

Q: In the Settings, I cannot export or import my backup data.

A: Refer to the previous solution.

Q: During charging, the light indicator glows red continuously.

A: Maximum charging cycle limit of the battery is reached. No further use of the battery is recommended. Please Refer to ’Guarantee’ on page 45 for further details.

7. CONTACT US

If you would like to get in touch with us, please use the Contact Us form provided in our website, www.buydeeper.com or e-mail us directly at sales@buydeeper.com.

For any questions regarding the purchase of your Deeper, please contact your local distributor. The list of all Deeper distributors is also provided in our website, which is subject to change without prior notice.

GUARANTEE

Dear Customer,

Thank you for purchasing Friday Lab, UAB product. We hope you will be happy using it. In the unlikely event that your product needs guarantee service, please contact your local dealer or an authorized service/ support network member (ASN) or directly Friday Lab, UAB at support@buydeeper.com. To avoid any unnecessary inconvenience on your part, we recommend that you read the documentation carefully before seeking guarantee service.

Your guarantee

This guarantee applies to your Friday Lab, UAB product if stated in the leaflets that accompanied your product provided that it was purchased within the Guarantee area. Friday Lab, UAB guarantees the product to be free from defects in material and workmanship at the date of original purchase for a periods of not less than one year from that date. The Friday Lab, UAB company that provide and will honour this guarantee is designated in this guarantee or accompanying leaflets under the country where you seek guarantee service.

If within the guarantee period the product is determined to be defective (at the date of original purchase) due to improper materials or workmanship, Friday Lab, UAB

or an ASN member in the Guarantee area will, without charge for labour or parts, repair or (at Friday Lab, UAB discretion) replace the product or it's defective parts subject to the terms and limitations below. Friday Lab, UAB or ASN members or dealers may replace defective products or parts with new or refurbished products or parts. All products and parts replaced become the property of Friday Lab, UAB .

Terms

1. Guarantee services will be provided only if the original invoice or sales receipt (indicating the date of purchase, model name and dealer's name) is presented with the defective product within the guarantee period. Friday Lab, UAB or dealers or authorized service network (ASN) may refuse free-of-charge guarantee service if these documents are not presented or if they are incomplete or illegible. This guarantee will not apply if the model name or serial number on the product has been altered, deleted, removed or made illegible.
2. This Guarantee does not cover transport costs and risk associated with transport of your product to and from Friday Lab, UAB or a dealer or an ASN member.
3. This guarantee does not cover:

a periodic maintenance and repair or parts replacement due to wear and tear.

b consumables (components that are expected to require periodic replacement during the life time of a product such as batteries).

c damage or defects caused by use, operation or treatment of the product inconsistent with normal personal use described in this manual.

d damage or changes to the product as a result of misuse, including:

  i neglect

  ii accidents, excessive heat, fire, chemicals, dust, other substances, vibrations, power surges, excess or incorrect supply or input voltage, radiation, electrostatic discharges including lighting, other external forces and impacts.

  iii treatment resulting in physical, cosmetic or surface damage or changes to the product.

  iv failure to use the product for it's normal purpose or in accordance with Deeper user manual on use.

  v failure to follow Deeper User Manual instructions.

vi failure to follow Deeper safety usage and regulations instructions

vii use of the product in a manner inconsistent with the technical or safety laws or standards in the country where it is used

viii use of the product with accessories, peripheral equipment and other products of a type, condition and standard other then prescribed by Friday Lab, UAB

ix repair or attempted repair by persons who are not Friday Lab, UAB or ASN members

x adjustments or adaptations without Friday Lab, UAB prior written consent, including:

- upgrading the product beyond specifications or features described in the instructional manual, or
- modification to the product to conform it to national or local technical or safety standards in countries other then those for which the product was specifically designed and manufactured.
- battery of the gadget if the charging cycles of it has exceeded 300, as tracked by the firmware. Please note that in this case the battery can still be replaced at

your own expense by the Out-Of-Warranty service provided by Friday Lab, UAB

4. This guarantee covers only hardware components of the product. It does not cover software (whether of Friday Lab, UAB or others) for which an end-user license agreement or separate warranty/guarantee statements or exclusions are provided or intended to apply.
5. Friday Lab, UAB does not warrant that the operation of the Deeper will be free of errors or interrupts. Small glitches may occur due to the reasons described in the troubleshooting chapter of this manual or due to the other unforeseen circumstances out of our control, such as changes in software or its configuration of the mobile or tablet device being used with the gadget.
6. We would like to inform you that the diagnostic fee of your product shall be paid by you if:

   a the diagnosis of your product performed by Friday Lab, UAB or by an authorized dealer or by an authorized Service center proves that you will not be entitled to a repair under this guarantee (for whatever reason) to rectify the defect;

   b or your product is working properly and no hardware fault could be diagnosed.

How to obtain warranty support?

Before submitting a warranty claim, we recommend to contact us at support@buydeeper.com for technical assistance. Valid warranty claims are generally processed through the point of purchase during the first thirty (30) days after purchase; however, this period of time may vary depending on where you purchased your product - please check with Friday Lab, UAB or the retailer where you purchased your product for details. Warranty claims that cannot be processed through the point of purchase and any other product related questions should be addressed directly to Friday Lab, UAB . The addresses or customer service contact information for Friday Lab, UAB can be found in the documentation accompanying your product or on the web at www.buydeeper.com.

Exclusions and limitations

Except as stated above, Friday Lab, UAB makes no warranties (express, implied, statutory or otherwise) regarding product or accompanying or constituent software quality, performance, accuracy, reliability, fitness for a particular purpose, or otherwise. If this exclusion is not permitted or fully permitted by applicable law. Friday Lab, UAB excludes or limits it's warranties only to the maximum extent permitted by applicable law. Any warranty that cannot be fully

excluded will be limited (as far as permitted by applicable law) to the duration of this guarantee.

Friday Lab, UAB only obligation under this guarantee is to repair or replace products subject to these guarantee terms and conditions.

Friday Lab, UAB is not liable for any loss or damage relating to the products, services, this guarantee or otherwise, including - economic or intangible loses - the price paid for the product - loss of profits, revenue, data, enjoyment or use of the product or any associated products - indirect, incidental or consequential loss or damage. This applies whether that loss or damage relates to:

- impaired or non-operation of the product or associated products through defects or unavailability while with Friday Lab, UAB or an ASN member, which caused downtime, loss of user time or business interruption
- inaccuracy of output from the product or associated products
- other causes.

This applies to loss and damages under any legal theory, including negligence and other torts, breach of contract, express or implied warranty, and strict liability (even where Friday Lab, UAB or an ASN

member has been advised of the possibility of such damages).

Where applicable law prohibits or limits these liability exclusions, Friday Lab, UAB excludes or limits its liability only to the maximum extent permitted by applicable law. Friday Lab, UAB liability under this guarantee will in no case exceed the price paid for the product, but if applicable law permits only higher liability limitations, the higher limitations apply.

Your legal rights reserved

Consumers have legal (statutory) rights under applicable national laws relating to the sale of consumer products. This guarantee does not affect statutory rights you may have nor those rights that cannot be excluded or limited, nor rights against the person from whom you purchased the product. You may assert any rights you have at your sole discretion.

No other warranties

No Friday Lab, UAB dealer, agent, or employee is authorized to make any modification, extension, or addition to this warranty.

Transportation

The contained lithium-ion batteries are subject to the Dangerous Goods Legislation requirements. The user can transport the product by road without further

requirements. When being transported by third parties (e.g.: air transport for forwarding agency), special requirements on packaging and labeling must be observed. For preparation of the item being shipped, consulting an expert for hazardous material is required.

LEGAL INFORMATION

© 2013 Friday Lab, UAB . Patents pending. All rights reserved. ‘Deeper’ and ‘Friday Lab’ are trademarks of Friday Lab, UAB . These trademarks may not be used without the permission of Friday Lab, UAB . Reproduction in whole or in parts is prohibited without prior consent from Friday Lab, UAB .

Friday Lab, UAB reserves the right to change any information provided in this document without prior notice.

The Bluetooth wordmark and logos are owned by the Bluetooth SIG, Inc. and any use of such marks by Friday Lab, UAB is under license from Bluetooth SIG.

Apple, iPhone, iPad and iPod are registered trademarks of Apple Inc., registered in the U.S. and other countries. App Store is a service mark of Apple Inc.

“Made for iPhone,” and “Made for iPad” mean that an electronic accessory has been designed to connect specifically to iPhone, or iPad, respectively, and has been certified by the developer to meet Apple performance standards. Apple is not responsible for the operation of this device or its compliance with safety and regulatory standards. Please note that the use of this accessory with iPhone, or iPad may affect wireless performance.

iOS is a trademark or registered trademark of Cisco in the U.S. and other countries and is used under license.

Android, Google Play, Google Maps, Google logo and Google+ are registered trademarks of Google Inc., registered in the U.S. and other countries.

Other trademarks and trade names mentioned in this document or in the separate leaflet provided are for identification and instructional use only and may be trademarks or registered trademarks of their respective owners.

www.buydeeper.com