8 / 16 port combo KVM Switch

1+1 Console 8 / 16 port combo KVM Switch

User Manual

V2.0

2007.4.25

Contents

Figures

1. Introduction

The 1+1 Console 8/16 port KVM switch can control attaching servers and computers from local or remote console. This KVM switch is loaded with features such as **one local console port, plus one optional CAT. 5-based remote console port or one optional IP-based remote console Port,** On Screen Display (OSD) Menu, Password security, Hot key Control, Push Button and Auto Scan Control. It has complete keyboard and mouse emulation for simultaneous PCs boot-up process.

With the CAT.5-based remote console port you can you remotely control servers and computers 1000 feet away. In other words, you can locate your monitor, keyboard and mouse up to 1000 feet away from the KVM switch. The built-in CAT.5 transmitter synthesizes VGA monitor and keyboard/mouse signals, and transmit the signals to the remote CAT.5 receiver over the popular LAN CAT.5 cable.

With the IP-based remote console port you can control one or many computers locally at the server site or remotely via the Internet using a standard browser. You can securely gain BIOS level access to systems for maintenance, support or failure recovery over the Internet. Communication is secure via SSL encryption.

1.1 Back Panel

8 port combo PS/2 console KVM Switch

16 port combo PS/2 console KVM Switch

1+1 Console, 8 port combo PS/2 console KVM switch

1+1 Console, 16 port combo PS/2 console KVM switch with CAT5 extender module

1+1 Console, 16 port combo PS/2 console KVM switch

1+1 Console, 16 port combo USB console KVM switch with CAT5 extender module

Figure 1. Back Panel

The 1+1 console is designed as one control two views, both local console and remote console can access and view the same computer port, but only one console control at a time. These two consoles are operating on first come first served basis. If the controlling console does not have keyboard or mouse activity for 2 seconds, the other console may take over the control right.

1.2 Main Features

- Support combo interface for connecting to computer ports conveniently
- Support one local console and one optional remote console (CAT.5 or over IP)
- CAT.5 console up to 1000 feet away from KVM switch with superior **auto-adjust** RGB gain/delay control capability
- Support MS windows, Netware, Unix and Linux with PS/2 port
- Support iMAC, Power MAC and Sun Micro Systems with USB port
- No Software Required --- easy computer selection via On Screen Display (OSD) Menu, Push Buttons, and Hotkeys
- Provide various Hotkey (Scroll-Lock/ Cap-Lock/ Num-Lock/ L-Alt/ L-Ctrl/ L-Win/ R-Alt/ R-Ctrl/ R-Win) for switching computer port and other control functions, so Hotkey function can be used in various types of keyboards, and to avoid Hotkey duplicate problem.
- Provide ACL (Access Control List) security function. Store up to 8 independent user accounts
- Hot Plug --- add or remove connected computers without powering off the KVM switch or computers
- Support two user layers, and search computer/server name
- Plug-n-Play monitor support
- Keyboard status restored when switching computer
- Support Daisy Chain function with both Bus (8-layer) and Tree (2-layer) topologies

1.3 Package Contents

1x KVM Switch Unit

1x CD-ROM (User manual, QSG)

1x AC to DC Power Adapter

1x Rack Mount Kit

1x Footpads set

1.4 System Requirements

Combo KVM Host side	HDDB15 male to one HDDB15 male and two mini din 6-pin PS/2 connectors
Local Console side (USB console)	■ One VGA Monitor ■ One USB Keyboard ■ One USB Mouse
Local Console side (PS/2 console)	■ One VGA Monitor ■ One PS/2 Keyboard ■ One PS/2 Mouse
IP Console module	■ One CAT.5 cable ■ Network access environment
CAT.5 KVM extender module	■ One CAT.5 cable ■ R-Box (CAT.5 KVM extender receiver) ■ One VGA Monitor ■ One USB Keyboard ■ One USB Mouse ■ Optional computer
USB to PS/2 Adapter	Optional for computer without PS/2 ports

1.5 Cables Diagrams

1.5.1 3-in-1 DB15 Cable

HDDB15 male to one HDDB15 male and two mini din 6-pin PS/2 connectors.

Figure 2. 3-in-1 DB15 Cable

1.5.2 PS/2 (keyboard) to USB adapter

PS/2 (keyboard) to USB (keyboard and mouse) adapter.

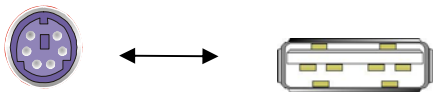

Figure 3. PS/2 keyboard to USB adapter

1.5.3 Daisy Chain Cable

VGA Cable: HDDB15 Male to Male

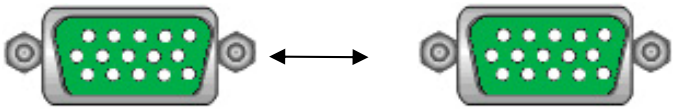

Figure 4. Daisy Chain Cable

> **Note:**
> Daisy chain needs the cable all 15 lines connected. This is a special VGA cable, normal VGA cable has unconnected lines. **Do not use other VGA cable for daisy chain.**

1.5.4 CAT. 5 / 5E / 6 Straight Through UTP / STP Cable

Pin	Wire Color	Pair	Function
1	White/Orange	2	T
2	Orange	2	R
3	White/Green	3	T
4	Blue	1	R
5	White/Blue	1	T
6	Green	3	R
7	White/Brown	4	T
8	Brown	4	R

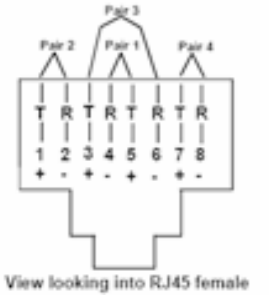

Figure 5. CAT. 5 / 5E / 6 Straight Through UTP / STP Cable (8P8C)

2. Hardware Installation

Before installation, please make sure all of peripherals and computers have been turned off.

2.1 Rack Mount Installation

Find a convenient place to put your KVM Switch. The 19” rack mount form factor makes it ideally mountable on a 19” rack. When mounting to a rack, attach the included brackets to the sides of the KVM Switch. Take note of the length of your cables so that your computers, KVM Switch, keyboard, mouse and monitor are distanced properly.

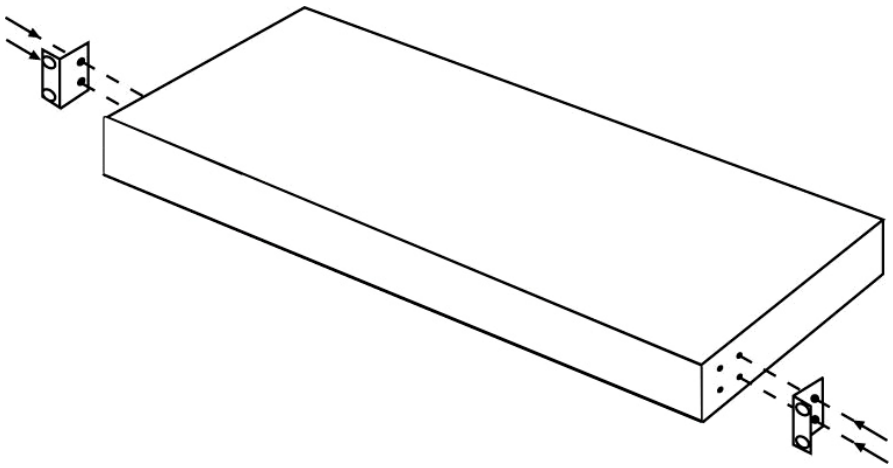

Figure 6. Rack Mount Installation

The KVM Switch can also be placed on a desk with attached footpads. To install footpads, please turn upside down; and refer to the following instructions properly for installing the footpads.

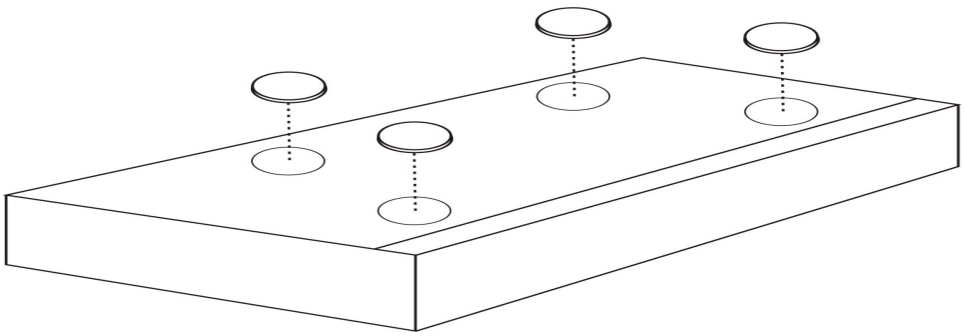

Figure 7. Footpads Installation

2.2 Computer / Server Installation

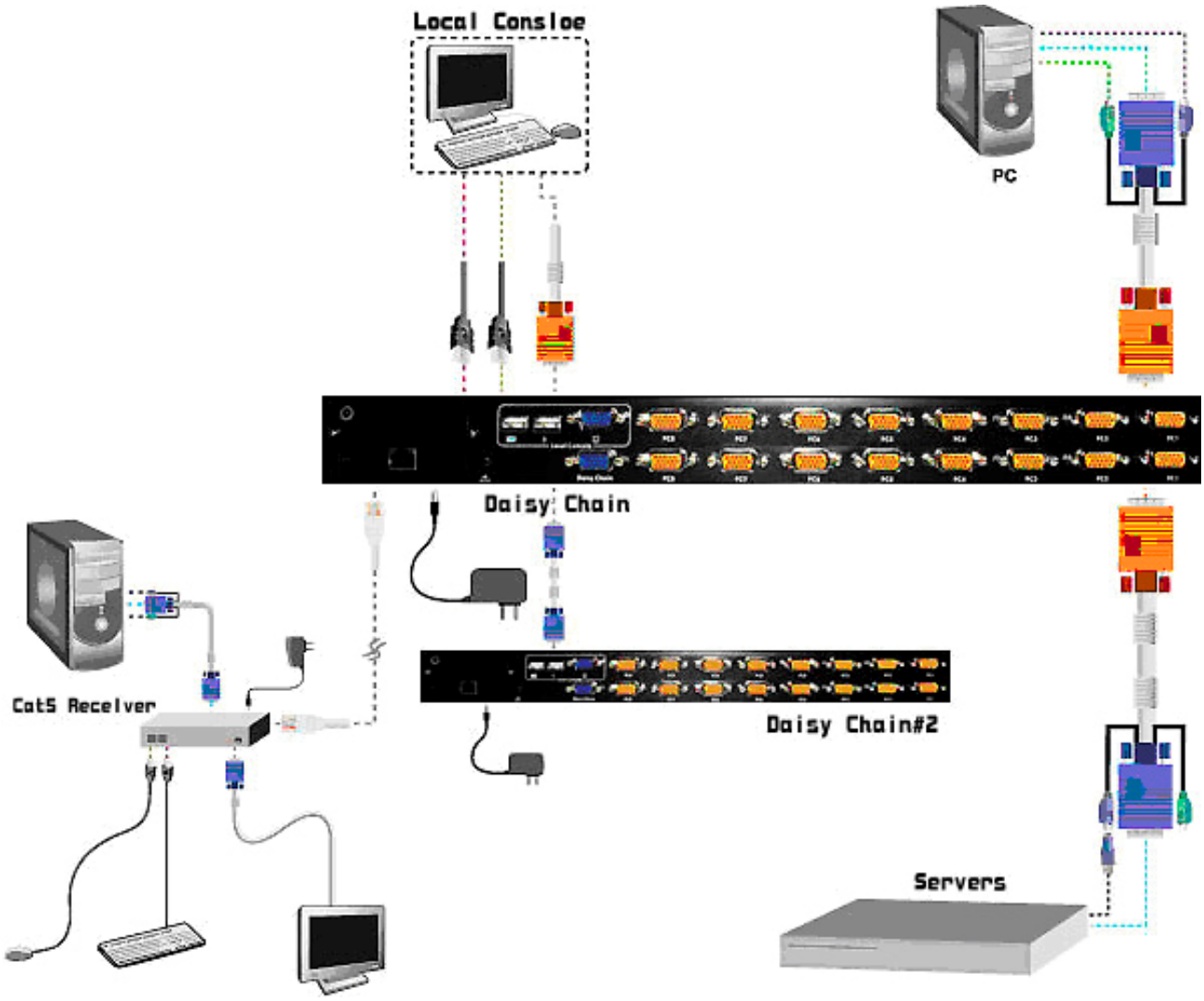

Figure 8. Computer/Server Installation

2.2.1 3-in-1 HDB15 Cable Installation

On the back of the KVM Switch, each of the 8 /16 PC ports has a HDB15 type connector. Each cable that comes with the Switch has a 3-in-1 connector at one end and a single HDB15 male connector at the other end. Plug the single connector end of the cable into the KVM PC port, and then plug the other end of cable to a PC VGA port.

Figure 9. 3-in-1 DB15 cable

Figure 10.

(a) PS/2 computer --- Plug in the PS/2 mouse connector to the computer mouse port, then the PS/2 keyboard connector to computer keyboard port.

Figure 11. 3-in-1 DB15 Cable and PS/2 to USB Adaptor

(b) USB computer --- Install a PS/2-to-USB adapter to the keyboard PS/2 connector, plug in USB connector to the PC USB port. This single USB port can handle both keyboard and mouse data.

2.3 Console Installation

2.3.1 Local Console

Connect the monitor to the HDB15 female port on the back of the KVM unit labeled with the monitor symbol at the Local Console connector.

There may be USB local console or PS/2 local console. For USB local console, connect the USB keyboard to either one of USB local port and USB mouse to the other USB port. These USB ports are special designed for keyboard and mouse, and can not work with USB hub or other USB devices. For PS/2 local console, connect keyboard to purple PS/2 port and mouse to green PS/2 mouse port. There is a Daisy chain port under VGA ports.

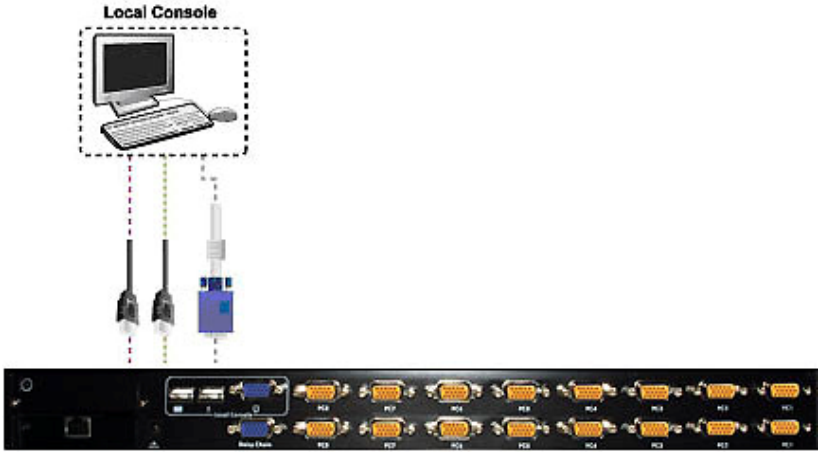

Figure 12. Local Console Installation

2.4 Optional Modules Installation

2.4.1 IP Module

Please refer to “IP KVM Module User Manual” for details.

IP Remote Console

Installation: Power off the KVM switch firstly. Remove the cover of the add-on slot, slide in the IP Module and make sure the module is fully inserted into the slot.

The IP Module redirects local keyboard, mouse and video data to a remote administration console. It allows you to control one or many computers locally at the server site or remotely via the Internet using a standard browser.

Figure 13. IP-Module

Serial Power Control

The IP Module comes with a serial port for connecting to any serial device, such as serial PDU to provide remote power control, such as power on, power off, and power cycle for the connected computers/servers.

2.4.2 CAT. 5 Transmitter Module

CAT. 5 Remote Console

Installation: Power off the KVM switch firstly. Remove the cover of the add-on slot, slide in the CAT.5 transmitter module and make sure the module is fully inserted into the slot.

To extending your console up to 1000 feet away by connecting the CAT. 5 cable to the R-Box in the remote end.

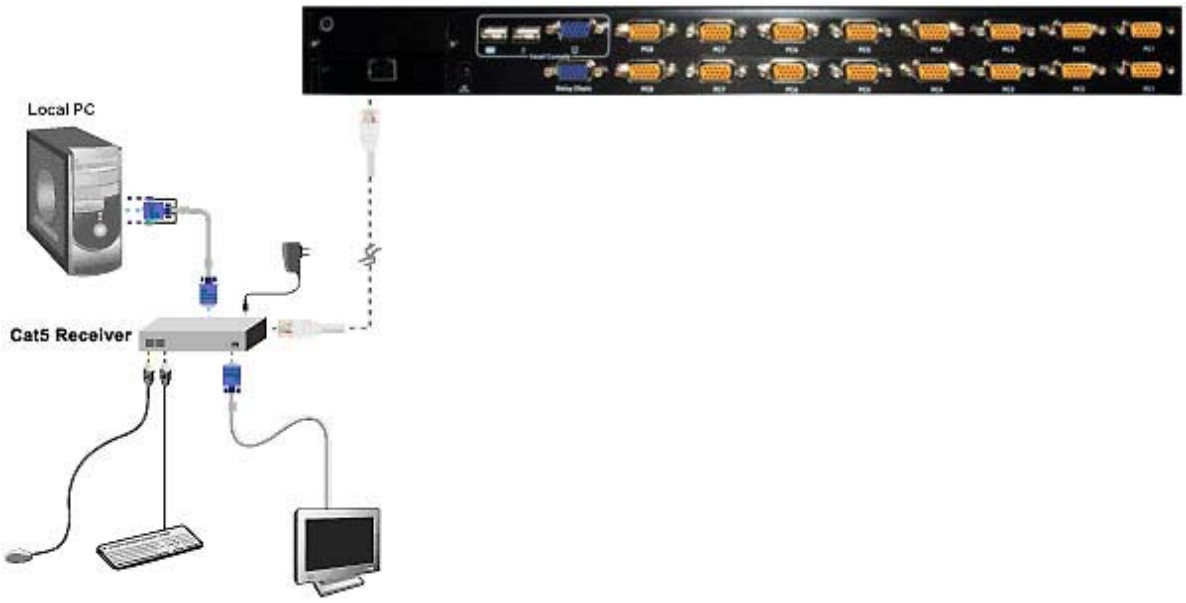

Figure 14. Connect to CAT. 5 Receiver (R-Box)

2.5 Power ON

Check connections and plug in power supply

Double check whether all cables/connectors are properly connected. You can check the color of keyboard and mouse connector to make sure the keyboard and mouse cables go to the correct port. Plug the power supply to the KVM switch and plug the AC power plug into the electrical receptacle. Now you will see the LED of Port 1 lights up, and hear a beep sound.

Recommend Power ON sequence as follows: Monitor, KVM Switch, finally Computer.

2.6 CAT. 5 KVM Receiver (R-Box)

The CAT.5 KVM receiver (R-Box) uses CAT.5 cable to extend your keyboard, mouse and monitor 1000 feet (300 meters) away from the KVM switch. It also has built-in 2-to-1 OSD KVM switch for selecting remote or local Computer.

2.7 CAT. 5 Receiver Installation

2. Make sure the CAT.5 cable is straight through type.
3. Plug one end of CAT.5 cable into RJ-45 connector of the KVM switch CAT.5 console port, and plug the other end of CAT.5 cable into RJ-45 port of the R-Box.
4. Connect keyboard, mouse and monitor to the R-Box console ports (USB Keyboard / Mouse port, and VGA port)
5. Connect Local Computer to R-box with the accompanied 3-in-1 HDDB15 cable.
6. Power on the R-Box by plugging in the power adaptor
7. Push the **SELECT** button to select remote or local Computer.

2.8 When video signal is foggy or unclear

The R-Box (CAT.5 Receiver) enables user to access to the computer, server, or KVM switch up to 1000 feet (300 meters) away with superior auto-adjust RGB gain/delay control capability

CAT.5 cables has CAT.5, CAT.5e, CAT.6 and STP/UTP types; If your application need high VGA resolution and long distance please select high end cables.
It is highly recommended to use optimal CAT5 cable length to get the best video quality and not waste unnecessary CAT.5 cable.

2.9 Daisy Chain Connection

Use one end of daisy chain cable to connect to the **Daisy Chain port** of Master KVM switch and connect the other end of daisy chain cable to the **Local Console port** of the next Slave KVM switch. Please repeat the connection procedures for next Slave KVM switch. You can daisy chain up to eight banks in maximum.

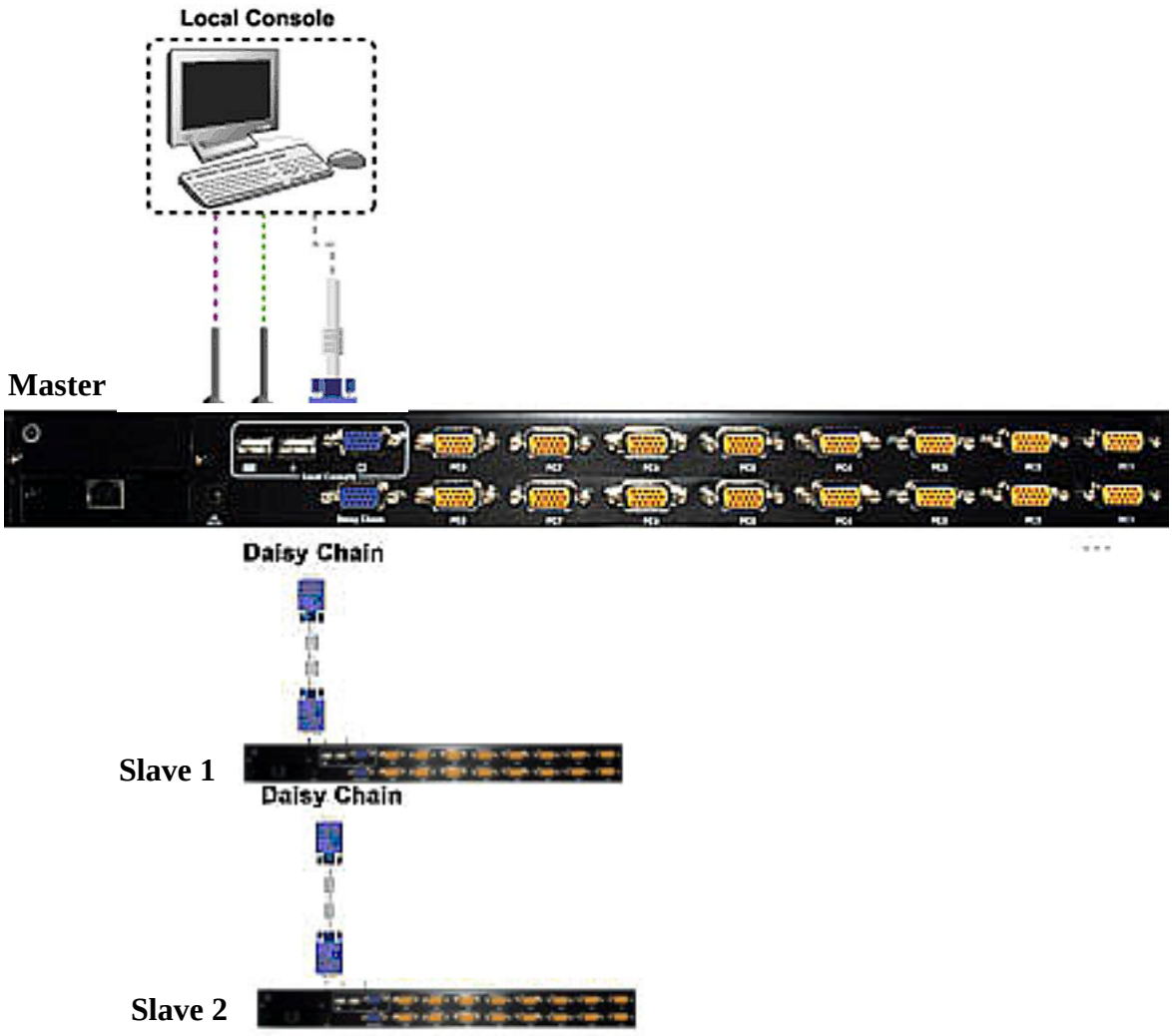

Figure 15. Daisy Chain Connection

The console OSD menu will show only the port information of the master KVM switch. When the master unit starts up, it will query all daisy chained Slave units, and automatically set up the Bank ID for each Slave unit. So the 7-seg LED on the Master unit will display 1, Slave 1 will display 2, Slave 2 will display 3, and so on. If not so, please **reset** (press “BANK” and port button) the Master unit to update the Bank ID immediately. Hot Plug function is supported in daisy chain connection. The Master unit will auto-query the daisy chained Slaves every 30 seconds.

You can also daisy chain through computer port. This daisy chain can work with other brand of KVM switch, but you need to change the Hotkey of slave KVM switch so that the master and slave KVM switch do not use the same Hotkey.

Figure 16. Daisy Chain through Computer Port

3. Usage

When you power on KVM switch, it will prompt a Login window waiting for user name and password. Please refer to “Hotkeys and OSD manual” for details.

3.1 Hotkey Commands and OSD Operations

Please refer to “Hotkey and OSD User Manual” for details.

3.2 Buttons

The push Buttons 1~8 :

You can simply switch to a port by pressing the corresponding button. For 8 ports KVM Switch, please press button 1 ~ 8 directly to select the port you want. For 16 ports KVM Switch, please press “**Shift**” button and individual button 1~8 simultaneously to switch to the port from port 9 to port 16. For example: Pressing “shift” button and button 5 simultaneously to switch to port 13, and the port red LED will turn on.

After power on the KVM switch, all of console ports (Local or Remote consoles) will be linked to Computer port 1.

3.3 Front Panel -- Port LED Indications

8 Ports

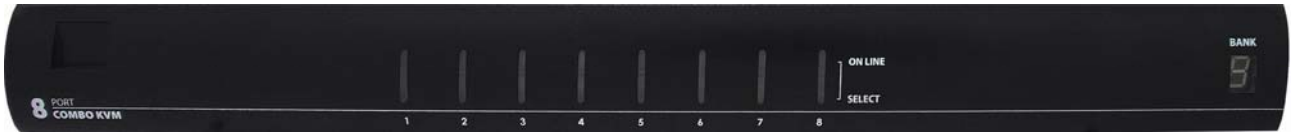

16 Ports

Figure 17. Front Panel

There are two LEDs for each port:

- The **Red** LED on indicating a powered-on Computer is connecting to the port. Notice the PC99 Computer always power on the PS/2 ports even if the Computer is not power on, so the red LED will turn on.
- The **Blue** LED on indicating the port has been selecting. The blue LED flashing if there is no Computer connected to the port.

Press “BANK” button and the port button simultaneously will reset the KVM switch.

3.4 BANK 7-seg LED

7-Segment BANK LED Indication 

When you want to view the next bank KVM switch, please press “BANK” push button repeatedly to the destination bank. The bank LED will be changed from bank 1 to the maximum daisy chain level and then to bank 1 again.

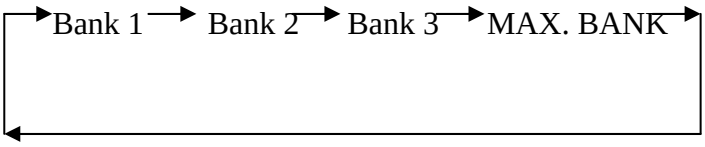

3.5 Hot Plug

The KVM Switch supports “Hot Plug” function for any non-PS/2 connectors. You may Hot Plug the USB mouse or USB keyboard as you like.

Note:

- DO NOT hot plug PS/2 port.
- Some O.S. (Operation Systems) like SCO Unix or Linux does not support “Hot Plug” function. If you apply “Hot Plug” to this kind of O.S., it will cause unpredictable behavior or shut down the Computer. Before attempting to use “Hot Plug”, please make sure your O.S. and mouse software driver support the “Hot Plug” function.

4. Technical Specifications

Feature	Specification	
KVM Type	PS/2 Console KVM	USB Console KVM
Console Ports	One Local PS/2 console	One Local USB console plus One Optional Remote Module
PC Port Connector	VGA	
PC Ports	8/16	
Max. Distance (KVM switch -- Host)	16 feet (5.0m)	
Video Resolution (Local Console)	1920 x 1440	
Video Resolution (Remote Console)	1600 x 1200 for CAT5-Based 500 feet remote console. 1024 x 768 for CAT5-Based 1000 feet remote console. 1600 x 1200 for IP-Based remote console	
CAT5-Based Remote Console Module	RJ-45 Connector, CAT.5 console up to 1000 feet away from KVM switch with superior, auto-adjust RGB gain/delay control capability	
IP-Based Remote Module	RJ-45 8P8C for 10/100 M Ethernet, DB9 male for Modem, Null modem and serial power control, Mini USB 2.0 receptacle	
Daisy Chaining	Support Daisy Chaining with both Bus (8-layer) and Tree (2-layer) topologies, DB15 Female Connector	
Computer port selection	On Screen Display (OSD) Menu, Hot Key, Push Button	
Hotkey	Provide various Hotkey (Scroll-Lock/ Cap-Lock/ Num-Lock/ Alt/ Ctrl/ Win)	
PC Port LEDs	2x LEDs per PC port: Power (Red), Online (Blue)	
7-seg LED for Bank display	1 set	
Security	Provide ACL (Access Control List) security function, store up to 8 independent controllable Computers lists	
Multilingual OSD (On Screen Display) control	8 languages (English, France, Germen, Spanish, Italian, Russian, Japanese, Simplified Chinese)	
Auto-Scan Intervals	5 ~ 99 Sec.	
Keyboard Emulation	PS/2 or USB	
Mouse Emulation	PS/2 or USB	
Max. PC Connection	>1024	
Housing	Metal	
Power	DC Power adapter : 12V DC, 1A	
Operation Temperature	0 ~ 50℃	
Storage Temperature	-20 ~ 60℃	
Humidity	0~95%, Non-Condensing	
Mechanical	19” Rack mount, 1U	
Dimension (mm)	444.5 * 160 * 44.3	

5. Troubleshooting

1. No LED display
   - Make sure the power adapter plugs in the KVM Switch. If the LED's still won't light, perform soft reset to KVM switch by press "BANK" button and last port button at the same time.
   - Do the hard reset by unplug the power then plug in again.
2. The computer boot up fine, but keyboard doesn't work
   - PS/2 keyboard or PS/2 mouse port is not designed for Hot Plug. USB mouse and keyboard can Hot Plug, but need to wait few seconds for Computer bus emulations.
   - Don't press any keys on the keyboard while the selected computer is booting up. Otherwise it might cause the keyboard error or keyboard is not detected at Host side.
   - Make sure the keyboard works when directly plugged into the computer.
   - Try a different keyboard, but use only 101, 102 or 104-key keyboard.
3. The Mouse is not detected during PC boot up
   - Make sure to plug in mouse first, then plug in keyboard.
   - Make sure the USB or PS/2 mouse works when directly plugged into the computer.
   - Avoiding moving the mouse or pressing the mouse buttons when switching ports.
4. No video signal display on the remote monitor
   - Please go to check all of VGA cables & connector and CAT.5 cable & connector are firmly connected.
5. Video signal is foggy or unclear on the screen
   - Please check if the VGA connector connected firmly. Check if the VGA resolution is too high for the length of CAT.5 cable being used. If the problem happened at VGA resolution, to shorten the CAT.5 cable length or reduce VGA resolution.
   - It is highly recommended to use "optimal CAT.5 cable length" to get the best video quality and not waste unnecessary CAT.5 cable.
   - If the CAT.5 Receiver is not connecting a local computer, please make sure the monitor is grounded properly.
6. VGA resolution output mismatch with the monitor's

   The KVM switch will provide DDC information to all the PC VGA board. If both the local console's monitor and KVM switch are turned on before the PC boot up, or if the PC boot up faster then the KVM switch, the PC miss the DDC (Data Display Channel) information that causes the VGA resolution output mismatch with the monitor's.

   In this case, please turn off the PC wait few minute then turn on again.

6. Certifications

FCC

This equipment has been tested and found to comply with Part 15 of the FCC Rules. Operation is subject to the following two conditions:

(1) This device may not cause harmful interference

(2) This device must accept any interference received. Include interference that may cause undesired operation.

CE

This equipment is in compliance with the requirements of the following regulations: EN 55 022: CLASS B.

RoHS

All contents of this package, including products, packing materials and documentation comply with RoHS.