TEXAS INSTRUMENTS

DAREF105

TAS3002/TAS3004 Reference Design Board

User's Guide

June 2001

Digital Audio Products

SLEU004

IMPORTANT NOTICE

Texas Instruments and its subsidiaries (TI) reserve the right to make changes to their products or to discontinue any product or service without notice, and advise customers to obtain the latest version of relevant information to verify, before placing orders, that information being relied on is current and complete. All products are sold subject to the terms and conditions of sale supplied at the time of order acknowledgment, including those pertaining to warranty, patent infringement, and limitation of liability.

TI warrants performance of its products to the specifications applicable at the time of sale in accordance with TI's standard warranty. Testing and other quality control techniques are utilized to the extent TI deems necessary to support this warranty. Specific testing of all parameters of each device is not necessarily performed, except those mandated by government requirements.

Customers are responsible for their applications using TI components.

In order to minimize risks associated with the customer's applications, adequate design and operating safeguards must be provided by the customer to minimize inherent or procedural hazards.

TI assumes no liability for applications assistance or customer product design. TI does not warrant or represent that any license, either express or implied, is granted under any patent right, copyright, mask work right, or other intellectual property right of TI covering or relating to any combination, machine, or process in which such products or services might be or are used. TI's publication of information regarding any third party's products or services does not constitute TI's approval, license, warranty or endorsement thereof.

Reproduction of information in TI data books or data sheets is permissible only if reproduction is without alteration and is accompanied by all associated warranties, conditions, limitations and notices. Representation or reproduction of this information with alteration voids all warranties provided for an associated TI product or service, is an unfair and deceptive business practice, and TI is not responsible nor liable for any such use.

Resale of TI's products or services with *statements different from or beyond the parameters* stated by TI for that product or service voids all express and any implied warranties for the associated TI product or service, is an unfair and deceptive business practice, and TI is not responsible nor liable for any such use.

Also see: Standard Terms and Conditions of Sale for Semiconductor Products. www.ti.com/sc/docs/stdterms.htm

Mailing Address:

Texas Instruments
Post Office Box 655303
Dallas, Texas 75265

Copyright © 2001, Texas Instruments Incorporated

EVM IMPORTANT NOTICE

Texas Instruments (TI) provides the enclosed product(s) under the following conditions:

This evaluation kit being sold by TI is intended for use for **ENGINEERING DEVELOPMENT OR EVALUATION PURPOSES ONLY** and is not considered by TI to be fit for commercial use. As such, the goods being provided may not be complete in terms of required design-, marketing-, and/or manufacturing-related protective considerations, including product safety measures typically found in the end product incorporating the goods. As a prototype, this product does not fall within the scope of the European Union directive on electromagnetic compatibility and therefore may not meet the technical requirements of the directive.

Should this evaluation kit not meet the specifications indicated in the EVM User's Guide, the kit may be returned within 30 days from the date of delivery for a full refund. THE FOREGOING WARRANTY IS THE EXCLUSIVE WARRANTY MADE BY SELLER TO BUYER AND IS IN LIEU OF ALL OTHER WARRANTIES, EXPRESSED, IMPLIED, OR STATUTORY, INCLUDING ANY WARRANTY OF MERCHANTABILITY OR FITNESS FOR ANY PARTICULAR PURPOSE.

The user assumes all responsibility and liability for proper and safe handling of the goods. Further, the user indemnifies TI from all claims arising from the handling or use of the goods. Please be aware that the products received may not be regulatory compliant or agency certified (FCC, UL, CE, etc.). Due to the open construction of the product, it is the user's responsibility to take any and all appropriate precautions with regard to electrostatic discharge.

EXCEPT TO THE EXTENT OF THE INDEMNITY SET FORTH ABOVE, NEITHER PARTY SHALL BE LIABLE TO THE OTHER FOR ANY INDIRECT, SPECIAL, INCIDENTAL, OR CONSEQUENTIAL DAMAGES.

TI currently deals with a variety of customers for products, and therefore our arrangement with the user **is not exclusive**.

TI assumes **no liability for applications assistance, customer product design, software performance, or infringement of patents or services described herein**.

Please read the EVM User's Guide and, specifically, the EVM Warnings and Restrictions notice in the EVM User's Guide prior to handling the product. This notice contains important safety information about temperatures and voltages. For further safety concerns, please contact the TI application engineer.

Persons handling the product must have electronics training and observe good laboratory practice standards.

No license is granted under any patent right or other intellectual property right of TI covering or relating to any machine, process, or combination in which such TI products or services might be or are used.

Mailing Address:

Texas Instruments
Post Office Box 655303
Dallas, Texas 75265

Copyright © 2001, Texas Instruments Incorporated

EVM WARNINGS AND RESTRICTIONS

It is important to operate this EVM within the specified input and output ranges described in the EVM User's Guide.

Exceeding the specified input range may cause unexpected operation and/or irreversible damage to the EVM. If there are questions concerning the input range, please contact a TI field representative prior to connecting the input power.

Applying loads outside of the specified output range may result in unintended operation and/or possible permanent damage to the EVM. Please consult the EVM User's Guide prior to connecting any load to the EVM output. If there is uncertainty as to the load specification, please contact a TI field representative.

During normal operation, some circuit components may have case temperatures greater than 60°C. The EVM is designed to operate properly with certain components above 60°C as long as the input and output ranges are maintained. These components include but are not limited to linear regulators, switching transistors, pass transistors, and current sense resistors. These types of devices can be identified using the EVM schematic located in the EVM User's Guide. When placing measurement probes near these devices during operation, please be aware that these devices may be very warm to the touch.

Mailing Address:

Texas Instruments
Post Office Box 655303
Dallas, Texas 75265

Copyright © 2001, Texas Instruments Incorporated

Preface

Read This First

About This Manual

This user's guide describes the operation of the TAS3002/TAS3004 reference design board, hereinafter referred to as the TAS3004 reference board. This document contains descriptions for board operations of a mono microphone or stereo application. Supplementally included on CD in the TAS3004 reference board kit is the software GUI documentation.

This design is an example reference design that can be customized for specific applications.

NOTE: In the default configuration, the TAS3004 reference board comes assembled with the TAS3004 chip. This board can also be used as is to evaluate the TAS3002, because the difference between the chips is minimal.

How to Use This Manual

This document contains the following chapters:

- Chapter 1—Overview
- Chapter 2—System Components
- Chapter 3—Board Operation
- Chapter 4—TAS3004 Reference Design Board—Block Diagram
- Chapter 5—Utilization Overview

Related Documentation From Texas Instruments

- *TAS1020A EVM User's Guide*, Literature No. SLEU002
- *TAS3002 Digital Audio Processor With Codec* data manual, Literature No. SLAS307B
- *TAS3004 Digital Audio Processor With Codec* data manual, Literature No. SLAS325

- *TLV2362 High-Performance Low-Voltage Operational Amplifiers* data sheet, Literature No. SLOS195B
- *TPA0112 2-W Stereo Audio Power Amplifier With Four Selectable Gain Settings* data sheet, Literature No. SLOS204B
- *TPS76433 Low-Power Low-Noise 150-mA Low-Dropout Linear Regulator,* data sheet Literature No. SLVS180B
- Software GUI release No. 2.0 or higher

FCC Warning

This equipment is intended for use in a laboratory test environment only. It generates, uses, and can radiate radio frequency energy and has not been tested for compliance with the limits of computing devices pursuant to subpart J of part 15 of FCC rules, which are designed to provide reasonable protection against radio frequency interference. Operation of this equipment in other environments may cause interference with radio communications, in which case the user at his own expense will be required to take whatever measures may be required to correct this interference.

Trademarks

Radio Shack and Optimus are trademarks of Tandy Corporation.

Other trademarks are the property of their respective owners.

Contents

1 Overview 1-1
1.1 Modes of Operation 1-2
1.2 Features 1-2
1.3 Environmental Working Conditions 1-3
1.4 Description of Inputs 1-3
1.5 Description of Outputs 1-3
1.6 Power Supply 1-3

2 Systems Components 2-1
2.1 Power Supplies and Decoupling 2-2
2.2 Microphone Amp and Bias 2-2
2.3 Line Input 2-2
2.4 ADC/DAC Functions 2-3
2.5 TAS3004—Digital Equalization 2-3
2.6 Clock Generation (Master Mode) 2-3
2.7 Digital Audio Slave Mode 2-3
2.8 EEPROM 2-4

3 Board Operation 3-1
3.1 Power-Up Sequence 3-2
3.2 Switch Functions for Digital Equalization 3-2
3.3 Software GUI 3-3
3.4 Software Installation 3-3
3.4.1 PC Setup 3-3
3.5 EQ GUI Start-Up 3-4

4 TAS3004 Reference Board—Block Diagram 4-1

5 Utilization Overview 5-1

A Supplemental Information A-1

Figures

3–1 Part I EQ GUI 3-5
3–2 Part II EQ GUI 3-6
4–1 TAS3004 Reference Board Block Diagram 4-2

Tables

3–1 Switch Functions for Speaker Equalization 3-3
5–1 EEPROM Programming Examples 5-1

Chapter 1

Overview

The TAS3004 reference board demonstrates the operation of the digital equalization and the dramatic improvements that 32-bit digital audio signal processing can make on the quality of sound.

Topic **Page**

1.1	Modes of Operation	1-2
1.2	Features	1-2
1.3	Environment Working Conditions	1-3
1.4	Description of Inputs	1-3
1.5	Description of Outputs	1-3
1.6	Power Supply	1-3

1.1 Modes of Operation

An analog stereo input signal is provided through a 3,5-mm. stereo jack. The left and right channels of the signal are filtered and converted via the analog-to-digital converter in the TAS3004 into left and right digital signals. The digital signals are processed by the TAS3004 and then converted to analog via the digital-to-analog converter of the TAS3004. The analog left and right signals are amplified at the output stage and routed to the speaker and headphone output connectors. This provides drive for unamplified speakers via RCA jacks and stereo headphones via a 3,5-mm jack.

The configuration of the TAS3004 is controlled via the software GUI (PC mode) or an onboard EEPROM (stand-alone mode).

- **PC Mode**. The TAS3004 reference board is connected directly to a PC parallel port via a *paddle board* (DAREF106R1 board, included in kit). EQ GUI software is installed on the PC to exercise full control of the TAS3004. Menus allow control of volume, tone, dynamic range compression, EQ selection, mixer settings, format, I2C control, loudness, analog output selection, and EEPROM snapshot (for stand-alone mode).
- **Stand-Alone Mode**. By burning a TAS3004 configuration snapshot into an EEPROM, volume, bass, treble and EQ selection control is maintained via momentary contact switches. See Section 5, *EEPROM Utilization Overview*, for a detailed description of how to burn the EEPROM data.

In stand-alone mode, the embedded microcontroller in the TAS3004 is accessed via six GPIO pins to provide conttol over volume, bass, treble, and EQ selection. The switches and the EQ settings they provide are described in Section 3.2.

The TAS3004 reference board can be configured as an IIS master or slave. It is shipped as an IIS master. This system receives and transmits digital data at a 48-kHz sampling frequency when it is used in the master mode.

1.2 Features

The TAS3004 reference board has the following features:

- TAS3004 stereo audio digital equalizer
- Operation via either a pre-programmed EEPROM or via the PC through a paddle board (DAREF106) and GUI software program
- Six switches used to control the volume, bass, treble and equalization
- Mute control
- LED to indicate the analog input channel selected
- A 12.288-MHz master clock frequency
- Sampling rate of 48 kHz used for both 1-V rms stereo line inputs and analog stereo output signals
- A mono microphone input
- Stereo, 2-W/channel, differential-output, audio-power amplifier
- Operates from a 9-Vdc power supply
- Onboard 3.3-V and 5-V voltage regulators
- Digital input/output port compatible with the TAS1020A EVM

1.3 Environmental Working Conditions

The circuit is designed to operate in a laboratory-type environment.

1.4 Description of Inputs

The input to the TAS3004 reference board is a 3,5-mm stereo jack for both the microphone input and the line input.

The line input signal required is a stereo analog signal. The analog input range is ground to a maximum of 1 V rms.

The microphone input signal is designed to amplify and bias a three-wire electret microphone.

The board initializes with analog input A (the line input) selected. To switch to the microphone input, the software GUI must be used.

A 2-pin header is provided to facilitate the use of the second B input when in the mono mode.

1.5 Description of Outputs

The **headphone output** is a 3,5-mm stereo jack. The headphone output is a stereo analog audio signal of 150 mW rms. The output is capable of driving 32-Ω headphones.

The **power amplifier output** is via two RCA connectors. The power amplifier output signal is capable of driving 4- to 8-Ω speakers at up to 2 W/channel of power.

1.6 Power Supply

The power supply for the speaker equalization board is 9 Vdc. The average current that the board draws is about 1.0 A when driving speakers and less than 150 mA when no speakers are connected.

Chapter 2

Systems Components

This chapter details individual circuits and functions within the TAS3004 reference board.

Topic **Page**

2.1	Power Supplies and Decoupling	2-2
2.2	Microphone Amp and Bias	2-2
2.3	Line Input	2-2
2.4	ADC/DAC Functions	2-3
2.5	TAS3004—Digital Equalization	2-3
2.6	Clock Generation (Master Mode)	2-3
2.7	Digital Audio Slave Mode	2-3
2.8	EEPROM	2-4

2.1 Power Supplies and Decoupling

The system uses a TL317 linear regulator to convert the 9-Vdc input to 5 Vdc to power the operational and power amplifiers, and a TPS76433 LDO to convert the 5-V power to 3.3 V to power the TAS3004.

All power input pins are decoupled with 0.1 μF capacitors.

2.2 Microphone Amp and Bias

The microphone input to the TAS3004 reference board is a low-level analog signal. A preamplifier made of a TLV2362, with a gain of approximately 30 dB, has been added to increase the amplitude to a level that can be accurately processed by the TAS3004. With a gain of 30 dB, a 28-mV signal produces a full-scale ADC output.

Because most common microphones are electret, and must have a bias, the other amplifier in the TLV2362 is used as a voltage follower to generate this bias. The TLV2362 provides a bias voltage of 2.5 V.

The microphone input is a 3,5-mm stereo connector, J3, on the TAS3004 reference board. The tip connection is for the microphone signal and the ring connection is the bias.

When the TAS3004 reference board is initialized, the line input (analog input A) is the active input for this board.

This circuit also functions with many dynamic microphones.

2.3 Line Input

A stereo line input is provided through another 3,5-mm stereo connector (J2). The tip connection is the left channel and the ring connection is the right channel.

Because the TAS3004 contains internal buffer amplifiers, only input capacitors are necessary for connection to the codec.

The full-scale input signal to the TAS3004 is 0.7 V rms; therefore, an input attenuator has been added to reduce the input signal. PC sound cards usually produce 1 V rms and some consumer audio equipment can produce peaks up to 2 V rms. The input attenuator is designed to produce full-scale output when a 1-V rms signal is applied to the input.

The line input can be selected by using the analog control panel with the software GUI.

2.4 ADC/DAC Functions

The TAS3004 reference board takes an analog stereo audio input (or a mono microphone signal) and converts the signal to digital so that digital equalization can be performed. The digital signal is then converted back into analog and sent to an external device. The analog-to-digital (A/D) and digital-to-analog (D/A) functions are performed by the TAS3004. The TAS3004 contains a stereo A/D and D/A 24-bit delta-sigma converter. The TAS3004 is capable of operating at a 48-kHz sampling frequency. The digital serial input option is set to programmable with the software GUI.

When initialized, the device defaults to the 20-bit I^2S mode.

2.5 TAS3004—Digital Equalization

The TAS3004 stereo audio digital equalizer contains a 32-bit digital audio signal processor. It provides seven bands of parametric equalization, bass, treble and volume control, dynamic range compression, and dynamic loudness contour.

2.6 Clock Generation (Master Mode)

The master clock for the TAS3004 reference board is provided by an external crystal connected to the TAS3004 internal oscillator. The oscillator runs at 12.288 MHz.

The other digital audio timing signals are provided by circuitry in the TAS3004.

2.7 Digital Audio Slave Mode

The TAS3004 reference board is shipped as a digital audio master. Its default mode of 20-bit I^2S is used. A 12.288-MHz crystal is installed on the board.

The digital output is connected to JB1, a TAS1020A EVM-compatible, 40-pin IDC connector. This output can be used to drive other devices if the interconnecting cable is kept short, about 6 inches.

For use with the TAS1020A EVM or other digital mastering devices, the board must be reconfigured:

1) Remove the crystal (Y1) from its socket.
2) Remove R21
3) Remove CY2
4) Add JP1 (supplied)
5) Add JP2 (supplied)
6) Unsolder and lift pin 7 of the TAS3004 (U1). This maps the TAS3004 to I^2C address 6Ah.
7) Install the 40-pin IDC connector (supplied) on the bottom of the board, if operation with the TAS1020A is desired.
8) When using with a TAS1020A EVM, place the supplied piece of weather stripping over JB1 to prevent short circuits.
9) Plug the TAS3004 reference board into JB2 of the TAS1020A EVM.
10) Apply +9-Vdc power to the TAS3004 board.
11) Follow instructions for the TAS1020A EVM in the TAS1020A EVM user's guide. (TAS1020A firmware will have to be written to interface the two boards.)

2.8 EEPROM

The TAS3004 is capable of being configured by data loaded from an external EEPROM. This EEPROM is not shipped with the EVM because it contains specific speaker equalization and the target speakers are unknown.

TI has several preprogrammed EEPROMs that contrain equalization code for speakers by various manufacturers.

Chapter 3

Board Operation

This chapter details the operation of the TAS3004 reference board.

Topic **Page**

3.1	Power-Up Sequence	3-2
3.2	Switch Functions for Digital Equalization	3-2
3.3	Software GUI	3-3
3.4	Software Installation	3-3
3.5	EQ GUI Start-Up	3-4

3.1 Power-Up Sequence

The power-up sequence for the speaker equalization board is very simple.

1) Insert either the EEPROM or the PS2 PC interface cable into the socket provided on the board. Verify the position of pin 1.
2) Connect +9 Vdc to the positive terminal of the power supply cable and connect a ground to the negative terminal.
3) Insert the 2,5-mm power connector into PJ1.
4) Turn on the power supply and verify the board draws a current of less than 150 mA.
5) Turn off the power.
6) Connect a 1-V rms analog signal to the 3,5-mm stereo input jack. This input can be provided either through a signal generator, a CD player, or other sound generation equipment. (Some CD players provide up to 2 V rms and may cause distortion.)
7) Connect the output to unamplified stereo speakers via the RCA output jacks. This output can be measured by a signal analyzer or played through speakers. Alternatively, connect stereo headphones to the 3,5-mm stereo headphone connector. *Connecting the headphones also bypasses any digital equalization.*
8) Turn on the power to the speaker equalization board and re-verify that the current draw is less than 150 mA after the board is initialized by the micro-controller or by the software GUI.
9) Turn on the power to the input and output devices.
10) Depending on the selected mode of operation—either through the EEPROM or through the software GUI program and the PS2 cable—introduce equalization to the input analog signal. The instructions for the EEPROM mode of operation are described in Section 3.2 and the instructions for the software start at Section 3.3.

3.2 Switch Functions for Digital Equalization

When the speaker equalization board is used with an EEPROM, the six onboard switches allow the user to adjust the digital equalization, volume, bass and treble of the audio input signal.

The EEPROM is preprogrammed with five different equalization effects—original or no EQ, flat EQ, jazz EQ, rock EQ and voice EQ. Because these equalizations were created for a specific type of speaker, they should be reprogrammed for your speakers or the user can obtain a pair of Optimus™ 5A8 speakers from Radio Shack™. The EEPROM is also preprogrammed to increase or decrease the volume, bass and treble in 1 dB increments/decrements for each push of the button. The switches on the board can be switched from EQ mode to volume/bass/treble mode by depressing SW3 and SW4 simultaneously. To return to the EQ mode, simultaneously depress SW1 and SW6.

Table 3–1 describes the operation of the switches.

Table 3–1. Switch Functions for Speaker Equalization

	SW6	SW5	SW4	SW3	SW2	SW1
Volume Up	X					
Volume Dn		X				
Bass Up			X			
Bass Dn				X		
Treble Up					X	
Treble Dn						X
Shift 1	X					X
Mute	X					
EQ1		X				
EQ2			X			
EQ3				X		
EQ4					X	
EQ5						X
Shift 2			X	X		

3.3 Software GUI

When the EEPROM used to configure the TAS3004 reference board is replaced by the *PS2 cable*, the configuration of the TAS3004 equalization can be done through the software GUI program from a PC. In the software-GUI operation mode, the six on-board switches are disabled and the seven bands of digital equalization, volume, bass and treble are controlled via the software. Refer to the *Software GUI User's Manual* for instructions on how to use this feature.

3.4 Software Installation

3.4.1 PC Setup

Set the parallel port on the PC into EPP mode. If EPP mode is not available, bidirectional or PS-2 mode often works. The parallel port configuration can be changed in the system setup during PC boot-up.

❑ Installation from *EQ Software Tools* CD

1) Insert the *EQ Software Tools* CD.

2) Run Setup.exe from the root directory.

3) Follow the installation directions.

- ❑ Installation from *DAREF105 EVM* CD
  1) Insert the *DAREF105 EVM* CD.
  2) Run Setup.exe from the Software directory of the EVM CD.
  3) Follow the installation directions.
- ❑ Connection of PC to EVM for EQ GUI Operation
  1) Connect the analog input from the CD, DVD player, or any alternative analog source to the TAS3004 reference board.
  2) Connect a parallel cable between the parallel port on the computer and the DB25 connector on the TAS3004 reference board.

Note: The parallel port cable can be replaced with the TI paddle board. In this document the term parallel cable means either the TI paddle board or the parallel-port cable.

3.5 EQ GUI Start-Up

1) Execute the software labeled *EQ GUI* from the directory where the software was loaded.
2) Load the TAS3004 EVM Demo.dat configuration file. The configuration files are all files with the file extension *.dat. The GUI prompts the user to enter a configuration file. The default file is EQ_GUI.dat. However, any of the other .dat files can be selected.
3) The GUI starts running if there are values loaded in the ALLPASS.EQ file. If the values loaded in the ALLPASS.EQ file are not defined, then Mute is the default for the volume and mixer.
4) Click the EQ Select button in the EQ GUI window [Figure 3–1 (a)]. Select the desired EQ file from one of the four windows in the EQ SELECT panel [Figure 3–1 (b)].
5) Click the Mixer button in the EQ GUI window [Figure 3–1 (a)]. In the mixer panel [Figure 3–1 (c)], adjust the mixer settings to the desired level.
6) Click the Volume button in the EQ GUI window [Figure 3–1 (a)]. In the VOLUME panel [Figure 3–2 (g)], adjust the volume to the desired level.
7) Click the Tone button in the EQ GUI window [Figure 3–1 (a)]. In the TONE panel [Figure 3–2 (h)], adjust the bass and treble to the desired level.
8) The graphic equalizer can also be selected to adjust specific frequencies. Click the Graphic EQ button in the EQ GUI window [Figure 3–1 (a)]. Select the appropriate *.gr file from the Graphic Equalizer panel [Figure 3–2 (e)]. (Note: the Graphic Equalizer panel and the EQ SELECT panel do not operate simultaneously. The settings in the active window override the settings in the other window.)
9) Click the Analog D/M button in the EQ GUI window [(Figure 3–1 (a)]. Pick the proper input select in the Analog Control Register window [Figure 3–2 (f)].

Figure 3–1. Part I EQ GUI

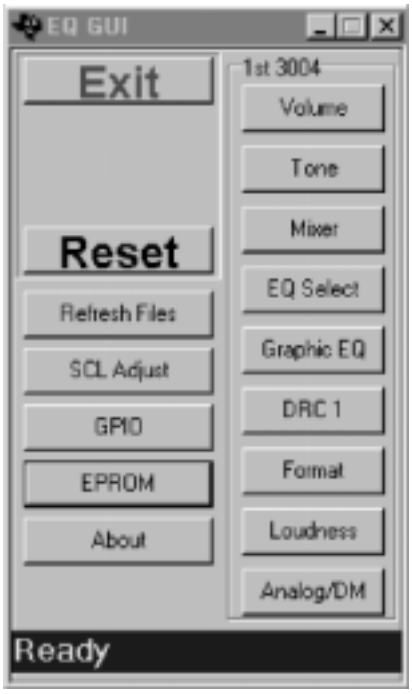

a

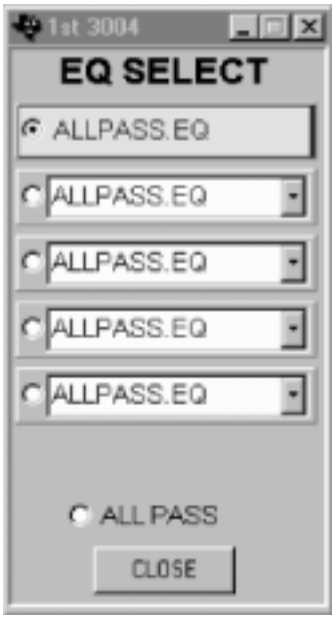

b

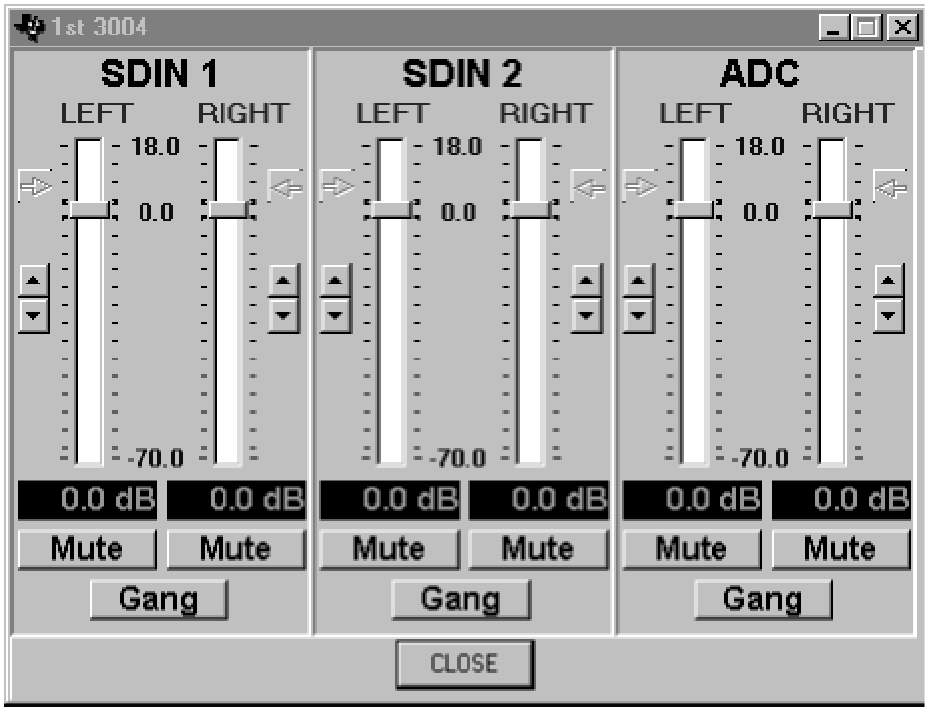

c

Figure 3–2. Part II EQ GUI

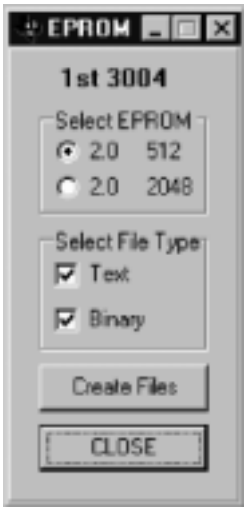

d

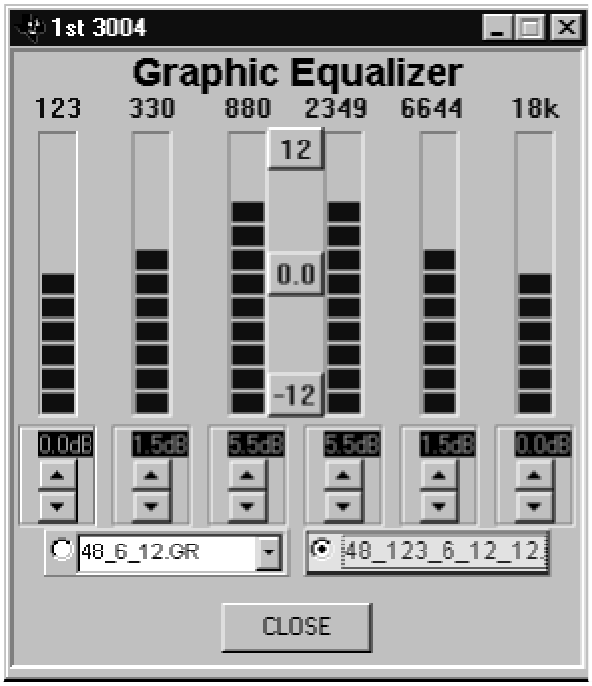

e

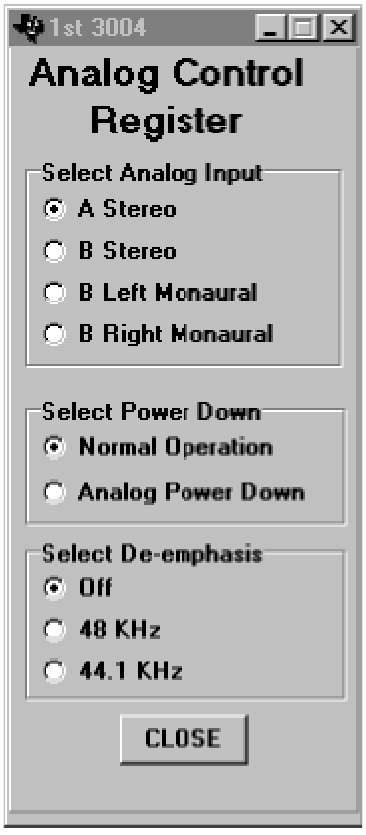

f

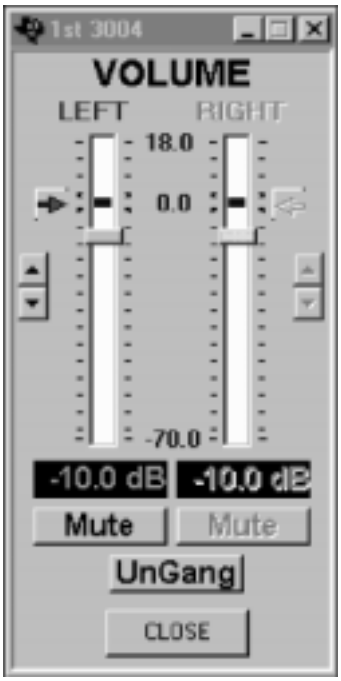

g

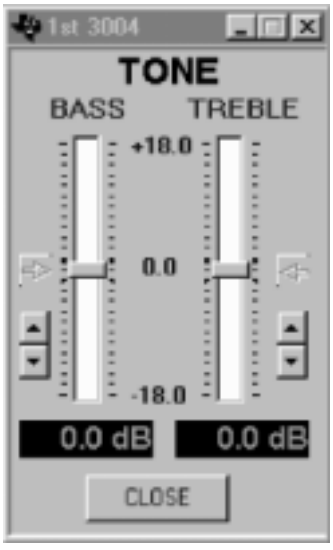

h

Chapter 4

TAS3004 Reference Board—Block Diagram

A functional block diagram of the TAS3004 reference board is shown in Figure 4–1.

Figure 4–1. TAS3004 Reference Board Block Diagram

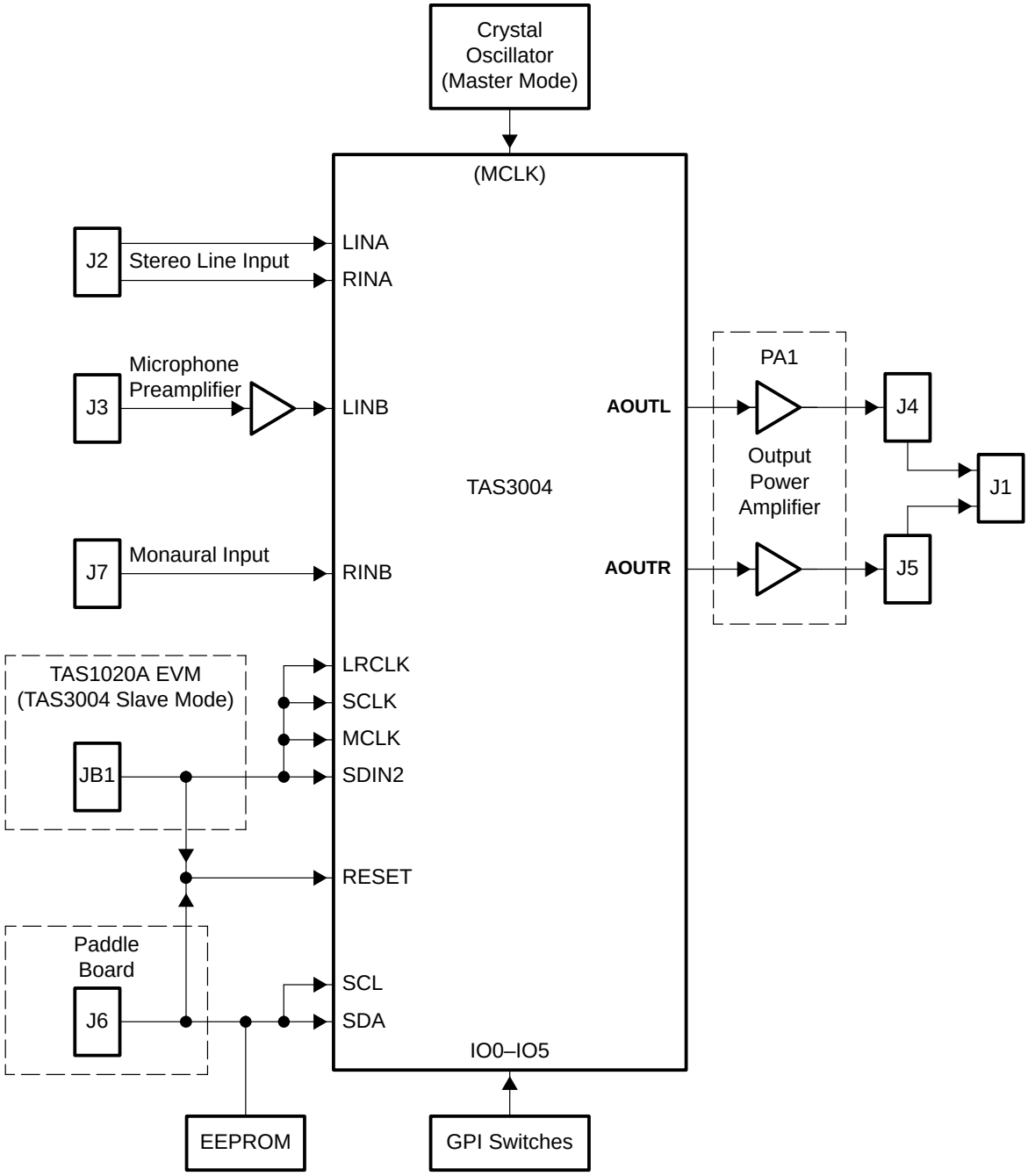

Chapter 5

Utilization Overview

The TAS3004 reference board is shipped in PC mode. It does not come with the EEPROM installed, because the EEPROM contains equalization coefficients specific to a set of speakers at the Texas Instruments digital audio lab. If the stand-alone mode of operation is desired, a 24LC04 or a 24LC16 EEPROM should be programmed and installed in the 8-pin DIP socket on the TAS3004 reference board.

The 24LC04 EEPROM is used for a system containing two speakers (2.0) and up to five equalizations (normal, jazz, rock, etc.) with the *same* equalization for both the right and left channels.

The 24LC16 EEPROM is used for a system containing two speakers (2.0) and up to five equalizations (normal, jazz, rock, etc.) with *different* equalization for both the right and left channels.

Table 5–1. EEPROM Programming Examples

Case	EEPROM	Bytes	Mode
1	24LC04	4K (512×8)	2.0, Left EQ = Right EQ
2	24LC16	16K (2048×8)	2.0, Left EQ ≠ Right EQ

The EEPROM function in the EQ GUI program makes both hex and binary copies of the settings of the GUI. The binary file (.bin) is used for programming the EEPROM, and the hex file is provided as a troubleshooting tool. The hex file contains identifiers that show the locations of the stored functions such as bass, treble, volume and equalization. When equalization has been determined using the other EQ GUI tools (see Section 3.5), click the EPROM button in the EQ GUI window [Figure 3–1 (a)]. Then click the Create Files button in the EPROM panel [Figure 3–2 (d)] to make the files.

After programming the EEPROM, the EEPROM is installed in the EPROM socket on the TAS3004 reference board. At power on, the TAS3004 reads this EEPROM and is initialized with the data. The GUI program can still be used while the EEPROM is installed.

Note: EEPROM Selection

EEPROM part numbers vary with manufacturers. Ensure the EEPROM selected can operate at 3.3 V and has a 2-wire serial interface. Here are some examples of EEPROMs that work on the TAS3004 reference board:

a. Atmel, AT24C04, AT24C16
b. MicroChip, 24LC04B, 24LC16B

Appendix A

Supplemental Information

This appendix contains the following items for the DAREF105 reference board:

- Gerber files
  - Top silkscreen with hidden text
  - Top silkscreen without hidden text
  - Copper layer 1
  - Copper layer 2
  - Fab notes
- Bill of materials
- Schematic

TEXAS INSTRUMENTS, INC. 2001
DIGITAL AUDIO SOLUTIONS GROUP
TAS3002/3004 REFERENCE DESIGN BOARD
ASSEMBLY NOTES: DAREF105R2.AN1

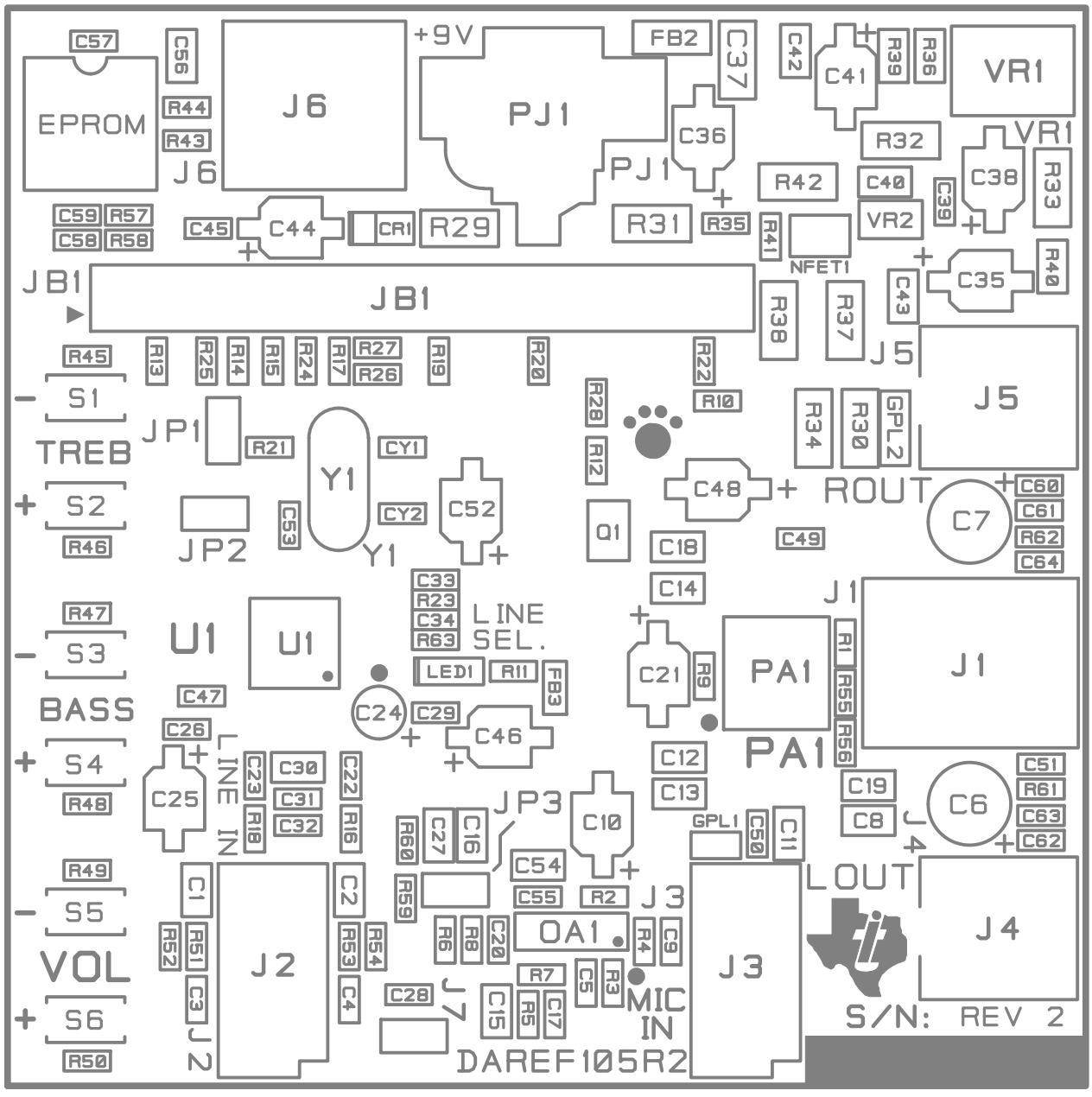

TEXAS INSTRUMENTS, INC. 2001
DIGITAL AUDIO SOLUTIONS GROUP
TAS3002/3004 REFERENCE DESIGN BOARD
TOP SILKSCREEN: DAREF105R2.SS1

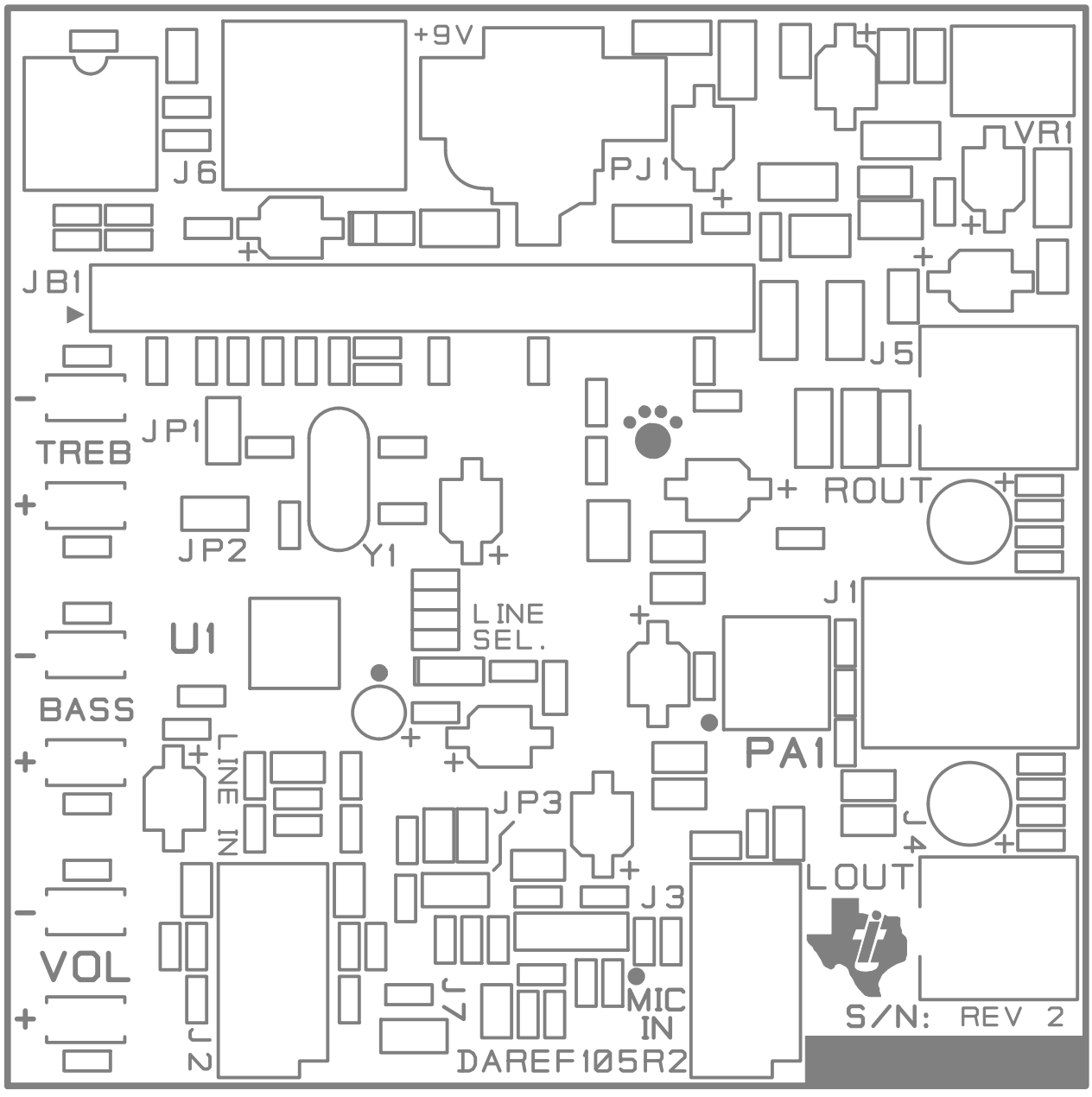

TEXAS INSTRUMENTS, INC. 2001
DIGITAL AUDIO SOLUTIONS GROUP
TAS3002/3004 REFERENCE DESIGN BOARD
TOP SILKSCREEN: DAREF105R2.SS1

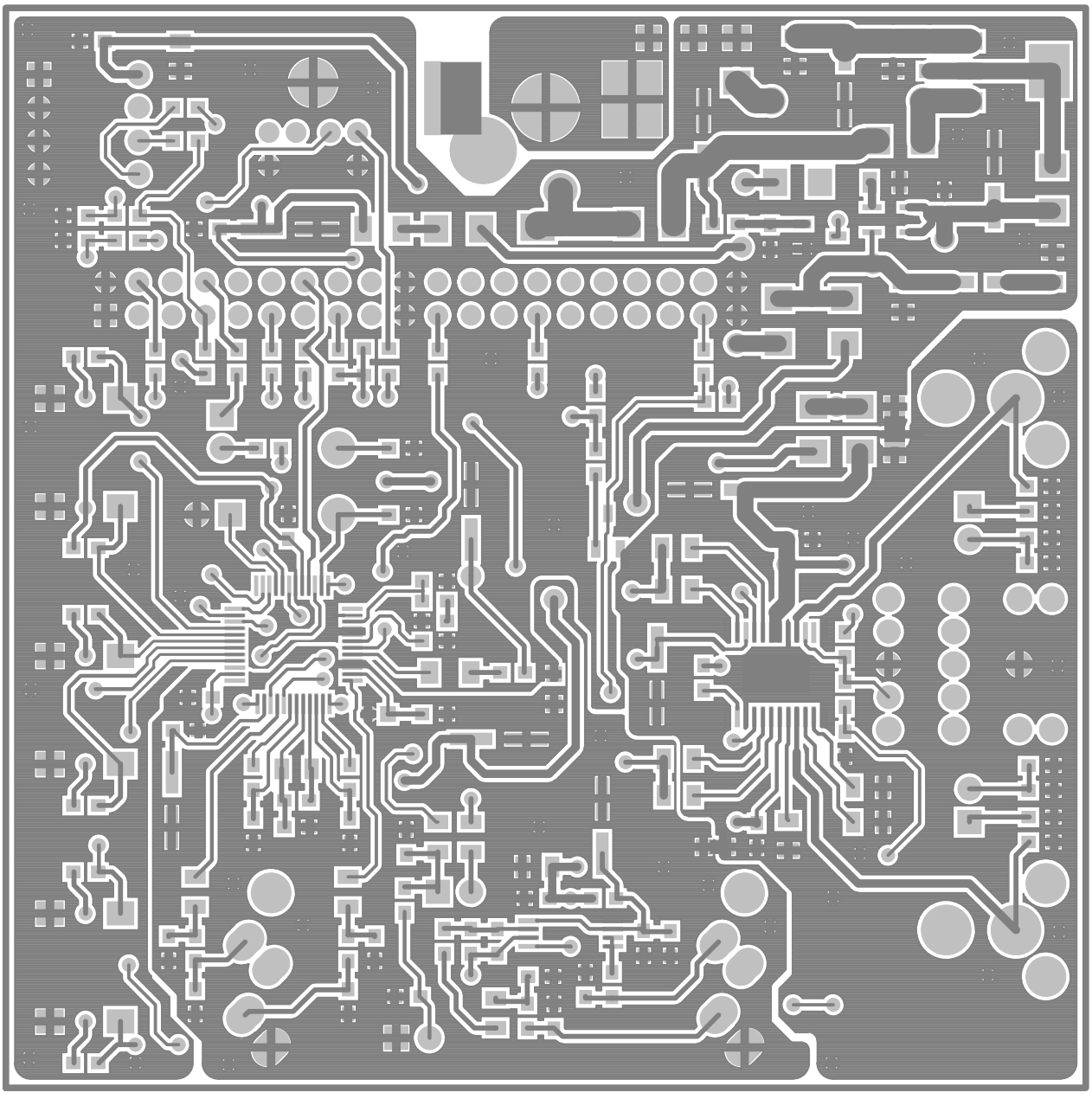

TEXAS INSTRUMENTS, INC. 2001
DIGITAL AUDIO SOLUTIONS GROUP
TAS3002/3004 REFERENCE DESIGN BOARD
COPPER LAYER 1: DAREF105R2.CL1

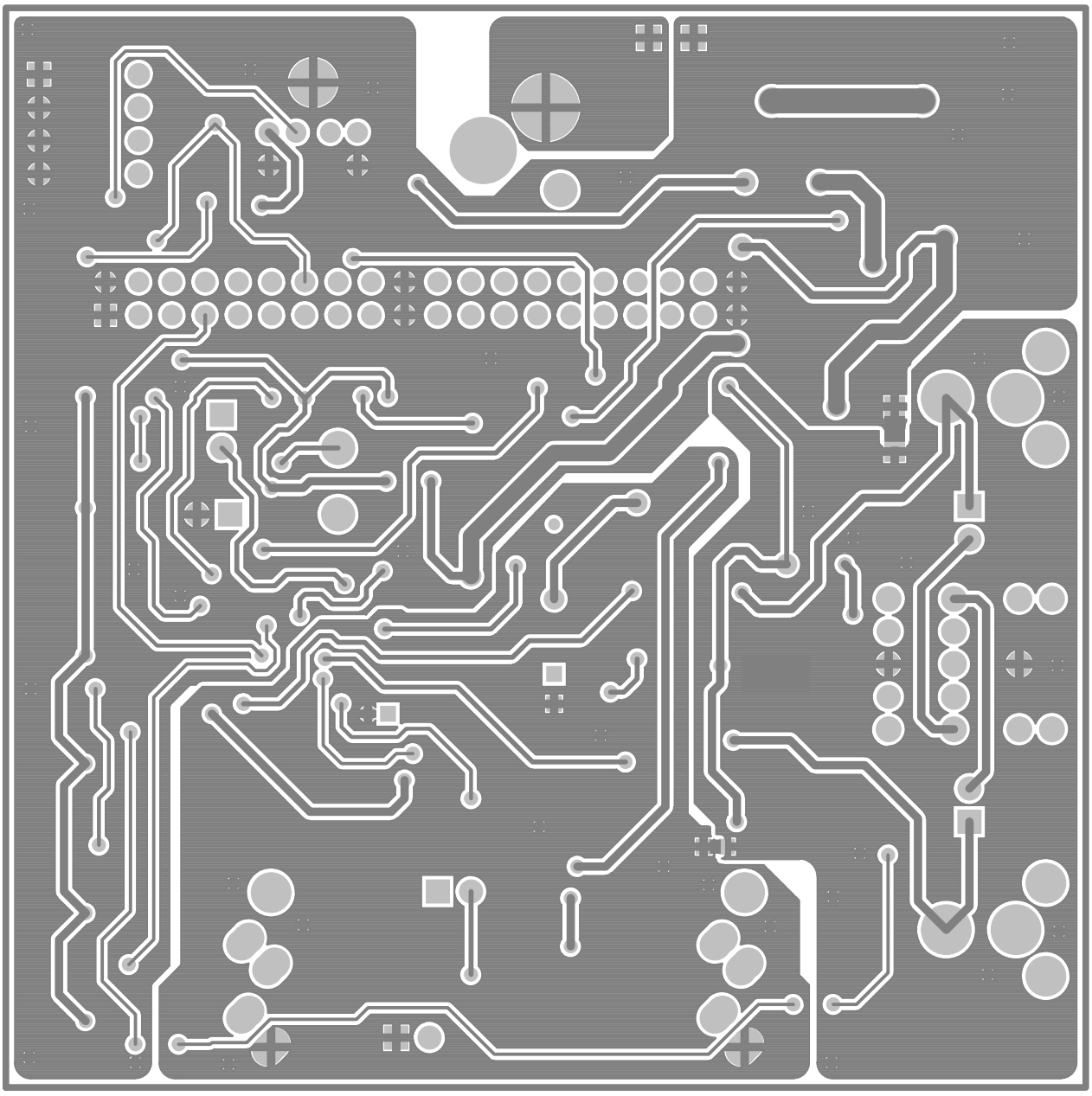

TEXAS INSTRUMENTS, INC. 2001
DIGITAL AUDIO SOLUTIONS GROUP
TAS3002/3004 REFERENCE DESIGN BOARD
COPPER LAYER 2: DAREF105R2.CL2

GENERAL NOTES:

1. ALL PLATED THROUGH HOLES TO BE CHEMICALLY CLEANED BEFORE PLATING.
2. END ITEM TO MEET OR EXCEED IPC-A-600.
3. MATERIAL: FR4.
4. FINISHED THICKNESS = .062 +/-.005
5. ALL COPPER WEIGHT = 1 OZ.
6. POSITION ACCURACY = +/-.0015
7. APPLY BLUE ENTHONE SOLDERMASK TO BOTH SIDES OF BOARD.
   SEPARATE ARTWORK FOR TOP AND BOTTOM.
8. APPLY WHITE SILKSCREEN TO TOP SIDE OF BOARD ONLY.
9. WARPAGE = +/- .005 PER LINEAR INCH MAX.
10. SMOBC.
11. HOT AIR LEVELING.
12. ALL HOLES ARE PLATED.

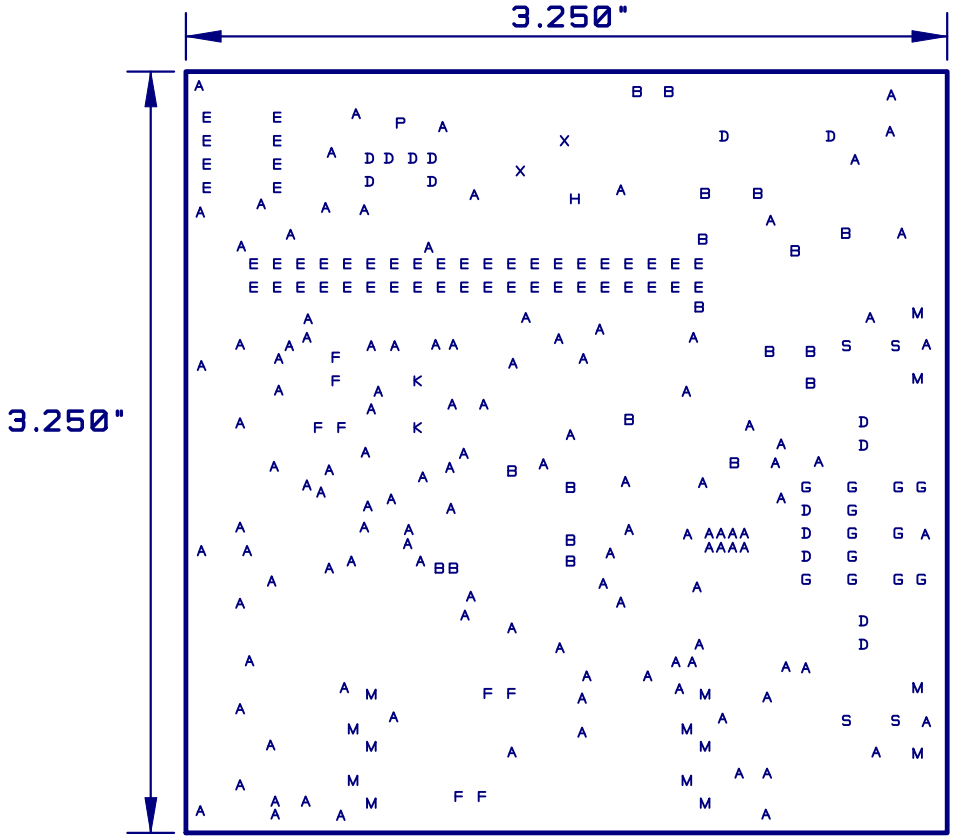

LAYER STACK UP / FILES INCLUDED

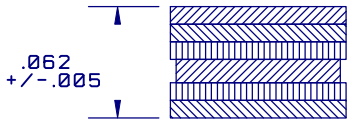

TOP SILKSCREEN (DAREF105R2.SS1)
TOP SOLDERMASK (DAREF105R2.SM1)
COPPER LAYER 1 (DAREF105R2.CL1)
FR4
COPPER LAYER 2 (DAREF105R2.CL2)
BOTTOM SOLDER MASK (DAREF105R2.SM2)

ASSEMBLY NOTES (DAREF105R2.AN1)

PLATED THROUGH HOLES (DAREF105R2.PLT)

THIS FILE (DAREF105R2.FAB)

Hole Schedule		
Symbol	Quan.	Size
A	122	14
B	19	20
D	15	30
E	48	35
F	8	40
G	12	45
H	1	50
K	2	60
M	14	70
P	1	85
S	4	100
X	2	120

UNLESS OTHERWISE SPECIFIED DIMENSIONS IN INCHES

TOLERANCES:
CORNERS = .075 R MAX
ANGLES +/-5 DEGREES

HOLE DIAMETERS:
≤.080 = +/-.003
>.080 = +/-.004

DIMENSIONAL LIMITS APPLY AFTER PLATING AND COATING

TEXAS INSTRUMENTS, INC. 2001
DIGITAL AUDIO SOLUTIONS GROUP
TAS3002/3004 REFERENCE DESIGN BOARD
FAB NOTES: DAREF105R2.FAB

DAREF105R2

TAS3002/TAS3004 Reference Design Board Rev. 1

UpDated: 15-Mar-01

TEXAS INSTRUMENTS INTEGRATED CIRCUITS

Item Number		TYPE / SIZE	DESCRIPTION	REFERENCE DESIGNATORS	QTY	MFG	MFG PART NUMBER	VENDOR PART NUMBER	VENDOR
1	TAS3002CPFB	TQFP48-PFB	TAS3004CPFB	U1	1	TI	TAS3002CPFB		TI
2	TLV2362PWR	TSSOP8-PW	TLV2362PWR	OA1	1	TI	TLV2362IPWR		TI
3	TPA0112PWP	HTSSOP24-PWP	TPA0112PWP	PA1	1	TI	TPA0112PWP		TI
4	TPS76433DBV	SOT23-DBV5	TPS76433DBV	VR2	1	TI	TPS76433DBV		TI

CAPACITORS

Item Number		TYPE / SIZE	DESCRIPTION	REFERENCE DESIGNATORS	QTY	MFG	MFG PART NUMBER	VENDOR PART NUMBER	VENDOR
5	C0603	RC0603	15pfd	CY1, CY2	2	Panasonic	ECJ-1VC1H150J	PCC150ACVTR-ND	DIGIKEY
6			100pfd	C20, C58, C59	3	Panasonic	ECU-V1H101JCV	PCC101ACVTR-ND	DIGIKEY
7			CAP CERAMIC 470PF 50V 0603 SMD	C3, C4, C5, C17, C28, C51, C60, C61, C62, C63, C64	11	Panasonic	ECJ-1VC1H221J	PCC471BVTR-ND	DIGIKEY
8			CAP 1200PF 50V CERAMIC 0603 SMD	C22, C23	2	Panasonic	ECU-V1H122KBV	PCC122BVTR-ND	DIGIKEY
9			CAP 1500PF 50V CERAMIC 0603 SMD	C33	1	Panasonic	ECU-V1H152KBV	PCC152BVTR-ND	DIGIKEY
10			CAP 68000PF 16V CERM X7R 0603	C34	1	Panasonic	PCC1760TR-ND	PCC1760TR-ND	DIGIKEY
11			CAP .1UF 16V CERAMIC X7R 0603	C9, C26, C29, C31, C32, C39, C45, C47, C49, C50, C53, C55, C57	13	Panasonic	ECJ-1VB1C104K	PCC1762TR-ND	DIGIKEY
12	C0805	RC0805	CAP 10000PF 50V CERM CHIP 0805	C40	1	Panasonic	ECJ-2VB1H103K	PCC103BNTR-ND	DIGIKEY
13			CAP .1UF 50V CERAMIC X7R 0805	C42, C43	2	Panasonic	ECJ-2YB1H104K	PCC1840TR-ND	DIGIKEY
14			CAP .15UF 25V CERAMIC X7R 0805	C15	1	Panasonic	ECJ-2YB1E154K	PCC1830TR-ND	DIGIKEY
15			CAP .47UF 16V CERAMIC X7R 0805	C1, C2, C8, C11, C12, C13, C14, C16, C18, C19, C27	11	Panasonic	ECJ-2YB1C474K	PCC1818TR-ND	DIGIKEY
16			CAP 1UF 16V CERAMIC Y5V 0805	C30, C54, C56	3	Panasonic	ECJ-2VF1C105Z	PCC1849TR-ND	DIGIKEY
17	C1206	RC1206	CAP .33UF 25V CERAMIC X7R 1206	C37	1	Panasonic	ECJ-3VB1E334K	PCC1889TR-ND	DIGIKEY
18	VSB10/16	CAP_VSB	CAP 10UF 16V VS ELECT SMD	C25, C35, C36, C38, C41, C44, C46, C48, C52	9	Panasonic	ECE-V1CA100SR	PCE3062TR-ND	DIGIKEY
19	VSB33/10	CAP_VSB	CAP 33UF 10V ELECT VS SMD	C10, C21	2	Panasonic	ECE-V1AA330WR	PCE3175TR-ND	DIGIKEY
20	KGA15-16	C160060-020	KG RAD ALUM ELEC CAP 15MFD 16V	C24	1	Panasonic	ECE-A1CKG150	P911-ND	DIGIKEY
21	FC100-25	C250100-030	CAP 100UF 25V ELECT FC RADIAL	C6, C7	2	Panasonic	EEU-FC1E101S	P10269-ND	DIGIKEY

RESISTORS

Item Number		TYPE / SIZE	DESCRIPTION	REFERENCE DESIGNATORS	QTY	MFG	MFG PART NUMBER	VENDOR PART NUMBER	VENDOR
22	R0603	RC0603	RES ZERO OHM 1/16W 5% 0603 SMD	R21, R63	2	Panasonic	ERJ-3GSY0R00V	P0.0GCT-ND	DIGIKEY
23			RES 10.0 OHM 1/16W 1% 0603 SMD	R22	1	Panasonic	ERJ-3EKF10R0V	P10.0HTR-ND	DIGIKEY
24			RES 27.4 OHM 1/16W 1% 0603 SMD	R23	1	Panasonic	ERJ-3EKF27R4V	P27.4HTR-ND	DIGIKEY
25			RES 49.9 OHM 1/16W 1% 0603 SMD	R13, R14, R15, R17, R19, R20, R27, R43, R44, R57, R58	11	Panasonic	ERJ-3EKF49R9V	P49.9HTR-ND	DIGIKEY
26			RES 332 OHM 1/16W 1% 0603 SMD	R5	1	Panasonic	ERJ-3EKF3320V	P332HTR-ND	DIGIKEY
27			RES 1.00K OHM 1/16W 1% 0603 SMD	R11, R12	2	Panasonic	ERJ-3EKF1001V	P1.00KHTR-ND	DIGIKEY
28			RES 1.50K OHM 1/16W 1% 0603 SMD	R61, R62	2	Panasonic	ERJ-3EKF1501V	P1.50KHTR-ND	DIGIKEY
29			RES 2.00K OHM 1/16W 1% 0603 SMD	R51, R53, R59	3	Panasonic	ERJ-3EKF2001V	P2.00KHTR-ND	DIGIKEY
30			RES 2.49K OHM 1/16W 1% 0603 SMD	R3	1	Panasonic	ERJ-3EKF2491V	P2.49KHTR-ND	DIGIKEY
31			RES 3.32K OHM 1/16W 1% 0603 SMD	R1	1	Panasonic	ERJ-3EKF3321V	P3.32KHTR-ND	DIGIKEY
32			RES 4.22K OHM 1/16W 1% 0603 SMD	R52, R54, R55, R60	4	Panasonic	ERJ-3EKF4221V	P4.22KHTR-ND	DIGIKEY
33			RES 4.99K OHM 1/16W 1% 0603 SMD	R2, R4, R24, R25, R26, R45, R46, R47, R48, R49, R50	11	Panasonic	ERJ-3EKF4991V	P4.99KHTR-ND	DIGIKEY
34			RES 10.0K OHM 1/16W 1% 0603 SMD	R6, R41	2	Panasonic	ERJ-3EKF1002V	P10.0KHTR-ND	DIGIKEY
35			RES 15.0K OHM 1/16W 1% 0603 SMD	R56	1	Panasonic	ERJ-3EKF1502V	P15.0KHTR-ND	DIGIKEY
36			RES 20.5K OHM 1/16W 1% 0603 SMD	R35	1	Panasonic	ERJ-3EKF2052V	P20.5KHTR-ND	DIGIKEY
37			RES 24.9K OHM 1/16W 1% 0603 SMD	R16, R18	2	Panasonic	ERJ-3EKF2492V	P24.9KHTR-ND	DIGIKEY

TAS3002/TAS3004 Reference Design Board Rev. 1

RESISTORS -- CONTINUED

Item Number		TYPE / SIZE	DESCRIPTION	REFERENCE DESIGNATORS	QTY	MFG	MFG PART NUMBER	VENDOR PART NUMBER	VENDOR
38			RES 47.5K OHM 1/16W 1% 0603 SMD	R7, R9, R10, R28	4	Panasonic	ERJ-3EKF4752V	P47.5KHTR-ND	DIGIKEY
39			RES 249K OHM 1/16W 1% 0603 SMD	R8	1	Panasonic	ERJ-3EKF2493V	P249KHTR-ND	DIGIKEY
40	R0805	RC0805	RES 1.0 OHM 1/10W 5% 0805 SMD	R40	1	Panasonic	ERJ-6RQJ1R0V	P1.0BTR-ND	DIGIKEY
41			RES 215 OHM 1/10W 1% 0805 SMD	R36	1	Panasonic	ERJ-6ENF2150V	P215CTR-ND	DIGIKEY
42			RES 649 OHM 1/10W 1% 0805 SMD	R39	1	Panasonic	ERJ-6ENF6490V	P649CTR-ND	DIGIKEY
43	R1206	RC1206	RES .1 OHM 1/8W 5% 1206 SMD	R31, R32, R33	3	Panasonic	ERJ-8RSJR10V	P.10PTR-ND	DIGIKEY
44			RESISTOR 1.0 OHM 1/8W 5% 1206	R30, R37, R38	3	Panasonic	ERJ-8GEYJ1R0V	P1.0ECT-ND	DIGIKEY
45			RES 10 OHM 1/8W 1% 1206 SMD	R29, R34, R42	3	Panasonic	ERJ-8ENF10R0V	P10.0FTR-ND	DIGIKEY

FERRITE BEADS

Item Number		TYPE / SIZE	DESCRIPTION	REFERENCE DESIGNATORS	QTY	MFG	MFG PART NUMBER	VENDOR PART NUMBER	VENDOR
46	FB0805	FB0805	BEAD CORE 39 OHM 4A 0805 SMD	FB3	1	Panasonic	EXC-ML20A390U	P10191TR-ND	DIGIKEY
47	FB1206	FB1206	FERRITE SMT 1206 1.5A 31 OHMS	FB2	1	STEWARD	MI1206K310R-00	240-1036-2-ND	DIGIKEY

SEMICONDUCTORS

Item Number		TYPE / SIZE	DESCRIPTION	REFERENCE DESIGNATORS	QTY	MFG	MFG PART NUMBER	VENDOR PART NUMBER	VENDOR
48	LL4148	DL-35	1N4148, DIODE 100V 500MW FAST SWITCHING	CR1	1	DIODES IINC	1N4148	LL4148DICT-ND	DIGIKEY
49	24LC64	DIP8	IC, 24LC64	EPROM	1	MICROCHIP Technology	24LC64-IP	24LC64-I/P-ND	DIGIKEY
50	LED_CMD15	LED_CMD15	LED GREEN DIFF 1206 SMD	LED1	1	Chicago Miniature	CMD15-21VGD/TR8	L62305TR-ND	DIGIKEY
51	2N7002	SOT23-DBV3	TRANS 60V N CHANNEL MOSFET TO236	NFET1	1	ZETEX	2N7002TA	2N7002TR-ND	DIGIKEY
52	FMMT2222A	SOT23-DBV3	Transistor, 2N2222A	Q1	1	ZETEX	FMMT2222ATA	FMMT2222ATR-ND	DIGIKEY
53	CRYSTAL-SCK	XTAL_SCKT	12.288MHz	Y1	1	ECS	ECS-122.8-S-4	X174-ND	DIGIKEY
54	LM317EMP	SOT-223	Voltage Regulator LM317	VR1	1	National Semiconductor	LM317EMP	LM317EMPTR-ND	DIGIKEY

CONNECTORS

Item Number		TYPE / SIZE	DESCRIPTION	REFERENCE DESIGNATORS	QTY	MFG	MFG PART NUMBER	VENDOR PART NUMBER	VENDOR
55	MINI_ST_SW	JACK_3.5MM-ST_S	3.5mm Stereo SW	J1	1	DGS PRO Audio		161-3503	MOUSER
56	MINI_STEREO	JACK_3.5MM-ST	CONN AUDIO JACK 3.5MM STEREO	J2(Line In), J3(Mic In)	2	CUI STACK	SJ-3535N	CP-3535N-ND	DIGIKEY
57	RCA_16PJ097	RCA_16PJ097	Left OUT, Right OUT	J4(Left Out), J5(Right Out)	2	dGS PRO Audio	16PJ097	16PJ097	MOUSER
58	PS2-6F	PS2_CP2460	MINI-DIN RECEPT UNSHIELD 6 POS	J6	1	CUI STACK	MD-60S	CP-2460-ND	DIGIKEY
59	JMP2	SIP2_040	No Value	JP1, JP2, JP3, J7(RINB)	4	Sullins Electronics	PZC02SAAN	S1011-02-ND	DIGIKEY
60	PWRJACK_MI	JACK_RASH712P	CONN 2.5MM PWRJACK HYBRID SMD	PJ1	1	SWITCHCRAFT	RASH712	SC1154-ND	DIGIKEY
61	SW_P8050	SW_P8050	SWITCH LIGHT TOUCH 240GF SMD	S1, S2, S3, S4, S5, S6	6	Panasonic	EVQ-PPDA25	P8087STR-ND	DIGIKEY
62	24LC64	DIP8	8 pin Dip socket	EPROM	1	Mill-Max	110-13-308-41-001	ED56083-ND	DIGIKEY
63			SHORTING JUMPER TIN	JP3 (install after item 59 installed	1	Sullins Electronics	STC02SYAN	S9000-ND	DIGIKEY

HARDWARE

Item Number		TYPE / SIZE	DESCRIPTION	REFERENCE DESIGNATORS	QTY	MFG	MFG PART NUMBER	VENDOR PART NUMBER	VENDOR
64			BUMPON HEMISPHERE .44X20 CLEAR		4	Electronic Specialty Market (3M)	SJ-5303 (CLEAR)	SJ5303-7-ND	DIGIKEY

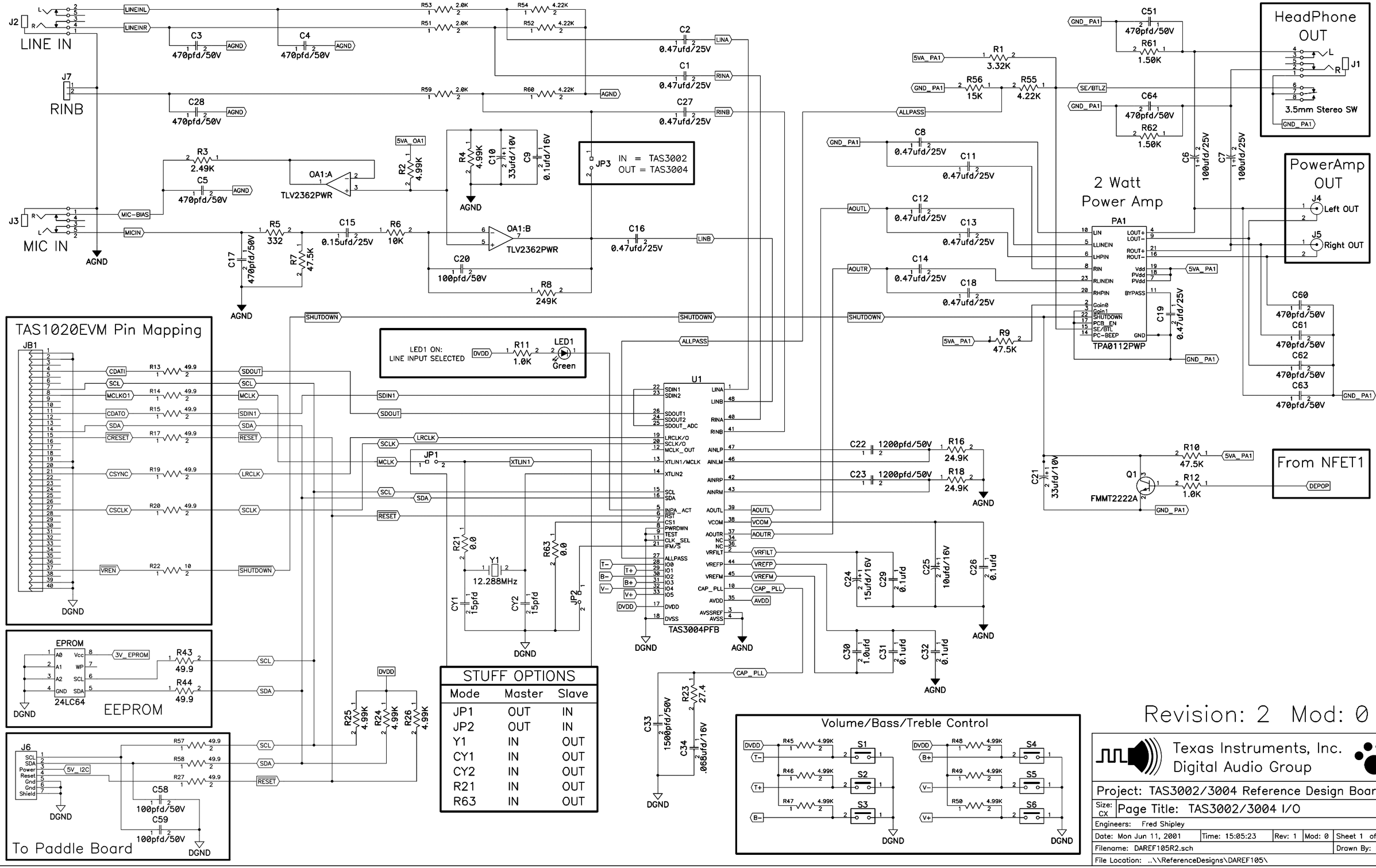

STUFF OPTIONS

Mode	Master	Slave
JP1	OUT	IN
JP2	OUT	IN
Y1	IN	OUT
CY1	IN	OUT
CY2	IN	OUT
R21	IN	OUT
R63	IN	OUT

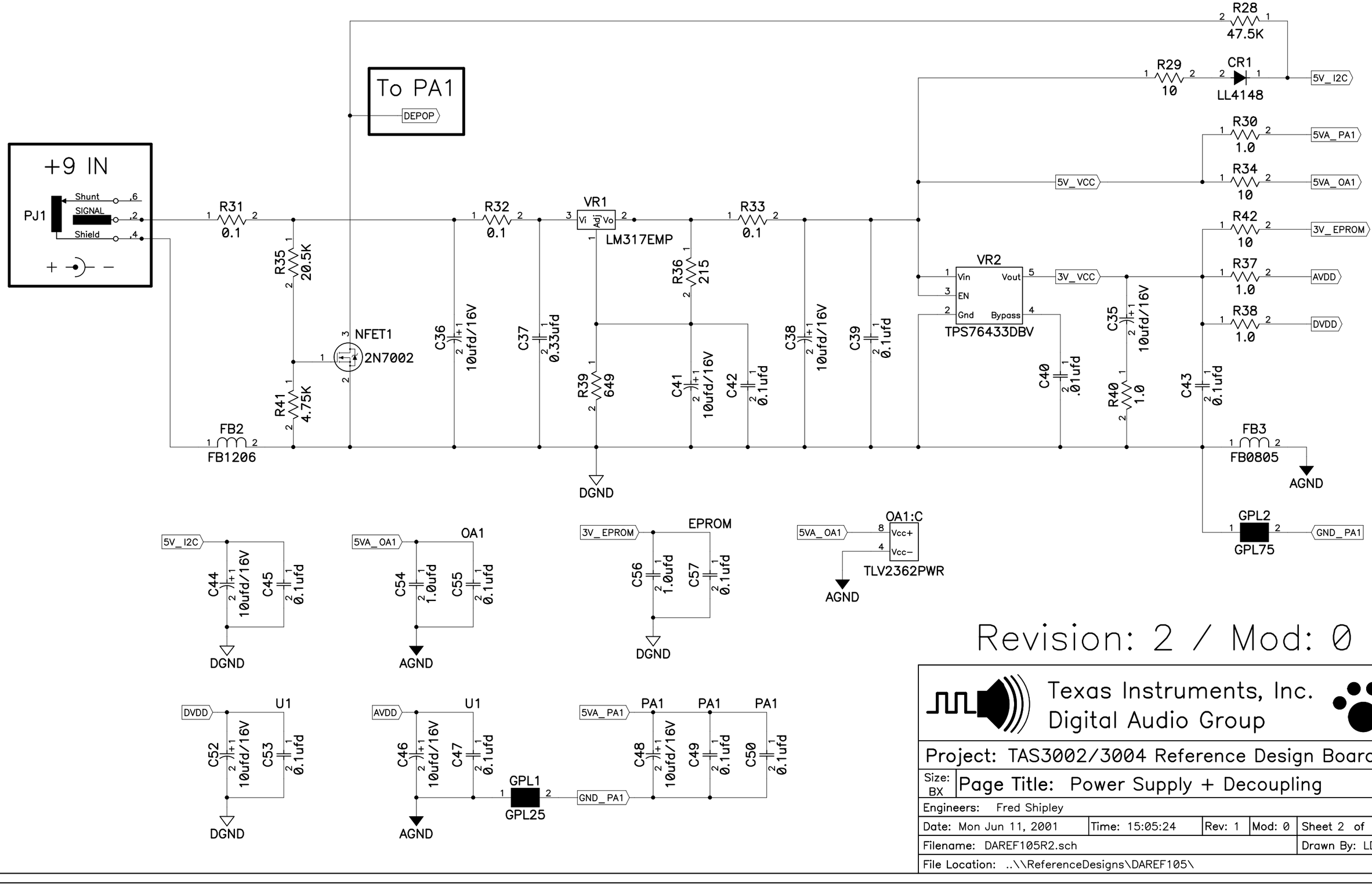

Revision: 2 / Mod: 0

Texas Instruments, Inc.
Digital Audio Group

Project: TAS3002/3004 Reference Design Board					
Size: BX	Page Title: Power Supply + Decoupling				
Engineers: Fred Shipley					
Date: Mon Jun 11, 2001	Time: 15:05:24	Rev: 1	Mod: 0	Sheet 2 of 2	
Filename: DAREF105R2.sch				Drawn By: LDN	
File Location: ..\\ReferenceDesigns\DAREF105\					

Mouser Electronics

Authorized Distributor

Click to View Pricing, Inventory, Delivery & Lifecycle Information:

Texas Instruments:

DA-REF105