ECO 810

DIN *plus*

NAME	OUTPUT	DESCRIPTION
ECO 810	6,0 - 10,0 kW	Stove

EN - 13240

BARBAS

ECO 810 Soapstone

ECO 810 Cast iron

Storage drawer and floor plate are optional!

TABLE OF CONTENTS

1. INTRODUCTION

1.1. PREFACE

We would like to congratulate you on your purchase of this modern BARBAS stove. This quality product will give you years of heating pleasure as you enjoy the play of the flames and the cosy glow of the fire.
This manual contains directions for both positioning the appliance and for its environmentally-friendly use. It also contains technical data for the appliance, parts information and directions in the event of problems. Study this manual carefully before using the stove. We recommend you keep this manual in a safe place for reference purposes.

1.2. SAFETY AND INSTALLATION INSTRUCTIONS

Safety

- Do not place flammable objects within 80 cm of the appliance. Pay special attention to furnishings and ornaments around the stove.

- To ensure safe working of the stove, at least 20 cm must be left between the sides/rear and the wall (temperature ≤ 80 °C).

- If the floor is flammable, an inflammable floor plate should be used under the appliance. Towards the front and the side, you should leave a minimal distance for the floor plate with regard to the appliance of respectively 50 and 30 cm.

- When you use your stove, the exterior will become hot. Always wear the glove or use the accessories supplied when filling etc. Protect yourself and others (especially children!) from burns. Do not leave children unattended when the stove is burning.

- Watch your clothing. Synthetic clothing in particular can easily catch fire and burn intensely.

- Do not approach the appliance with flammable materials or liquids. Any work with solvents, adhesives etc. in the space heated by the stove can be very dangerous.

- Make sure you know what state your chimney is in. Cracks in the chimney may not only lead to damp, staining of walls and leaking of smoke, they can also impair the carrying off of smoke. Make sure you get proper advice from your Barbas dealer or other specialist company.

- Avoid chimney fires! Have your chimney swept at least once per year - more often if you use your stove a lot.
  Prevent excessive deposits of soot inside the chimney by not burning freshly-cut wood. Instead, burn clean, dry chopped wood.

- Do not use your stove as a barbecue. This can cause (flammable) fat deposits to be left in the chimney and hastens the chimney becoming clogged. Prevent your chimney being soiled from above (birds' nests etc.) by fitting a suitable cap to the chimney pot.

- In case more than one stove is connected to a chimney, as is often the case in Germany, the stove has self-closing doors (Bauart 1).

- Follow the instructions issued by your local fire brigade.
  The stove can be taken in operation if national and local regulations are satisfied. The required constructive adaptations should be satisfied as well.

Installation Instructions

- Wood, wood bricks and (anthracite) coals can be burned in the stove.

- **Never** use the stove to burn rubbish.

- Read all instructions/stickers, on and around, the appliance.

- Carefully read the user manual before using your appliance for the first time. When you first fire up your appliance, there are a number of extra points you should take into account. See section 5.

- **Never** use liquid fuels, such as petrol, lighter fluid etc. Use of these could cause dangerous situations and damage your appliance.

- In transit, some parts of the appliance may have moved from their original place. Check that the door opens and closes, the retardant plate (brake plate below) is fitted correctly to the brackets at the top of the stove, the cast-iron interior panels are fixed to the walls and the stones on the bottom have not moved. Check that the ridling grill is in the correct position and slides properly. Check that there is nothing in the ash drawer that should not be there.

- Prevent over-firing (white glow) by charging up the fire with primary air (through the grid) over an extended period. Cast-iron components (grid, fire cladding) may become overheated and be damaged as a consequence. Fire the stove slowly when the stove is new and new cast iron has been applied.

- Consult the current local building regulations before starting the assembly.

2. LOCATION

2.1. INCLUDED

In the appliance	Set documentation	- Warranty - Manual
	Smoke connection set box	- Connection ring (cast iron) - Sealing plate - 4 Attachment bolts including nuts and washers - Protective plate for rear of appliance - 2 Screws for fastening the protective plate
		- Glove - Small brake plate above. Only for use with a top flue connection, including 2x spacer sleeve, L = 26 mm and fitting material - Cast-iron rosette - Cast-iron cover plate - Rosette support for cast-iron cover plate
Type	Soapstone panel set	- Top plate with through-feed hole - Left side panel - Right side panel
	Cast iron	

N.B. If any part is missing, please contact your dealer.

2.2. ACCESSORIES

The following accessories can be supplied by your dealer:

Part no	Accessories
323854	Storage drawer ECO 800 / ECO 810
310049	Floor plate (F) ECO 810, anthracite

3. INSTALLATION INSTRUCTIONS

3.1. FITTING INSTRUCTIONS

When fitting the stove, local and/or national regulations relating to fire safety must be followed. In case of doubt, consult the fire safety department of the local fire brigade, particularly if the stove is to be fitted in a home with walls and/or floors containing flammable material.

Position the appliance sufficiently far away from the wall behind it. If the walls are not fire-proof, the distance should be such that the wall in question cannot become hotter than 80 °C, even when the stove is stoked up to high temperatures. In case of doubt, insert a fire-proof protection shield.
The floor on which the appliance is placed must have sufficient bearing power.

Combustion air supply

To ensure that your stove works well, it is essential that it has a supply of combustion air. The combustion air suction opening is at the bottom of the stove, to the rear. The air required can be drawn in either from the ambient air in the living room, or from the crawl space under the floor. If the air is drawn in from the crawl space, please ensure that it is well ventilated. It is also possible to draw in the air from outside.
In this case, use piping with a diameter of Ø80 cm. Choose for an air-inlet a place on the wall which allows air to be drawn in at all times. (For example an air-inlet with a cover plate and free intake openings on the sides.)

3.2. CHIMNEY

Be sure that existing chimneys are completely air-tight and in good condition. In terms of dimensions, the chimney must have a diameter of at least 150 mm for the entire length (including the chimney pot).
Ensure that the chimney is fitted with an appropriate cap to avoid rain and dirt getting in (as well as bird’s nests).
The draught flowing through the chimney determines how well your stove will burn (recommended draught 0.15 mbar: = 15 Pa).
In the event of problems, a solution may be a different chimney cap, if necessary one with a chimney fan. Contact a specialist if you have any doubts about any of the above points.

If your chimney is unsuitable, or if your home does not have a chimney, we recommend the use of double-walled stainless steel chimney sections. Chimneys must comply with the prevailing building regulations. Make sure the building is carried out by a specialist. When purchasing such chimneys, be sure to check if a casing is required.

Important:

- chimneys must be free-standing, i.e. they must not rest on the appliance itself.
- any pipe connections that are not insulated must also be fully insulated.
- flammable material must be kept clear (outside the casing/insulation zone) of all through-feeds in the floor or wall (remember the roof decking).

Between the stove and chimney, use thick-walled smoke piping (Steel, ≥2 mm). The first pipe connected to the appliance must have a diameter of 150 mm at both ends. This will prevent any condensation from the chimney running over the external end of the pipe. Connect the pipes to the existing chimney (ceiling) using a sliding sleeve (niche pipe). Check all connections for air-tightness.

If there is too much draught running through your chimney (e.g. if the chimney is long and straight in a tall building), it may be possible to insert a chimney valve in the pipe near the appliance. Before doing this, be sure to obtain sound advice from a specialist.

Do not make any horizontal connections. Deposits and soot will accumulate here (unless it is a short horizontal connection directly behind the stove).

The chimney calculation, as in Germany, is made according to DIN 4705 parts 1 and 2.

The mass flow and exhaust temperature of the stove
The mass flow and exhaust temperature of the stove are shown in chapter 13; Technical Data. These values are important to consider when assessing the dimensions of the flue to which the stove is to be connected.

Cleaning the chimney/flue
Make sure your chimney/flue is cleaned at least once a year by a recognized chimney sweep. Your principle fuel source must be well-dried wood of suitable dimensions. The moisture content of the wood should be approximately 15%, and the length and diameter 32 cm.

If the chimney has a chimney valve, the free opening in the chimney valve flap must measure at least 12% of the surface.

3.3. FITTING THE STOVE

The appliance can make use of either a top or rear connection Ø150 mm for the flue (chimney).

In connection with the weight of the appliance, it is advisable to remove temporarily as many heavy components as possible before moving it.

Depending on the chosen set-up, attach the (cast-iron) connection to the top or the rear of the appliance.
Fit the sealing plate and the protective plate to the other opening.

Situate the appliance in such a way that the flue gas outlet is precisely in line under the chimney connection (niche pipe) in the ceiling (top connection) or with the chimney connection (niche pipe) in the wall (rear connection).

Important:

- If use is made of the top connection, you must also assemble the small brake plate (above) supplied. This plate must be mounted 26 mm from the underside of the connection, making use of 2 spacing collars.

- If a rear connection is used, the small brake plate (above) must **not** be fitted!!

Top connection

Flue gas outlet



Top connection:
Assembly small brake plate (above) and connection ring (cast iron).



Rear connection:
Assembly sealing plate and protective plate.

Rear connection

Flue gas outlet



Rear connection:
Assembly connection ring (cast iron).

Top connection:
Assembly sealing plate
(protective plate not required!)

Combustion air supply connection

The appliance is fitted with a combustion air supply connection Ø80 mm on the rear of the appliance.
If desired, you can make a direct connection from this to the outside air.
This connection can be via the rear or the bottom of the appliance.

Connection to the back
using a 90º bend Ø80 mm

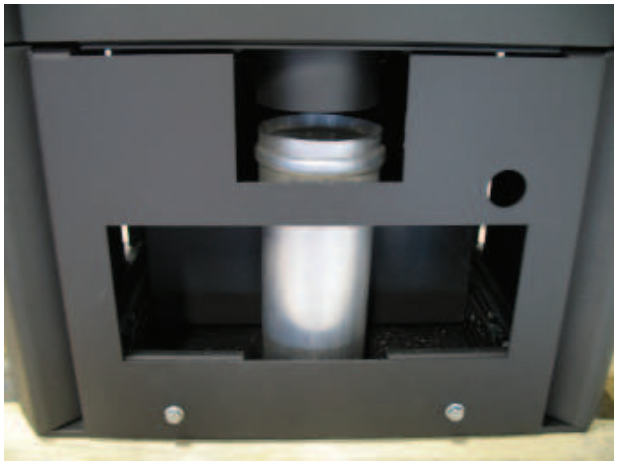

Connection underneath
using a Ø80 mm pipe

Only use combustion air supply pipes
of non-inflammable material!

Placing the retardant plate (brake plate) -(below) in the appliance

ECO 810 Cast iron

All cast-iron parts are fitted in the factory.

ECO 810 Soapstone

The soapstone side panels (left + right) and top plate are supplied separately.

Assembly of the soapstone:

- Place the side panels carefully in the two metal cams on the underside.

- Fit the side panels to the top of the appliance.

- Fit the rosette support (for cast-iron rosette and cover plate) to the bottom of the soapstone top plate.

- Turn the top plate over and position it.

- Attach the top plate.

Check that the soapstone side panels and top plate fit together properly.

- Adjust the three screws in the rosette support to the proper height for the cast-iron rosette and cover plate.

- Fit the cast-iron rosette and cover plate.
  Ensure that these are at the same height as the soapstone top plate.

3.3.1 Connecting to the chimney

Ceiling connection:

Insert a pipe into the sliding sleeve (niche pipe) to the ceiling as deep as possible. Position a chimney pipe on the top plate and mark off where the top pipe should be shortened.

Shorten the top pipe and insert it, once more, as deep as possible into the sliding sleeve in the ceiling. Position the lower pipe over the sealing washer. Now pull the top pipe down and over the bottom pipe.

Wall connection:

Determine the length of pipe required and push this as far as possible into the sliding sleeve before the appliance is placed.
Once the appliance is placed, you can pull the pipe from the sliding sleeve and slide it over the connection ring on the appliance.

Any seams in the flue gas outlet (pipes) joints should be sealed with a heat-resistant kit that remains elastic or with a glass-fibre cord.

4. OPERATION OF THE STOVE

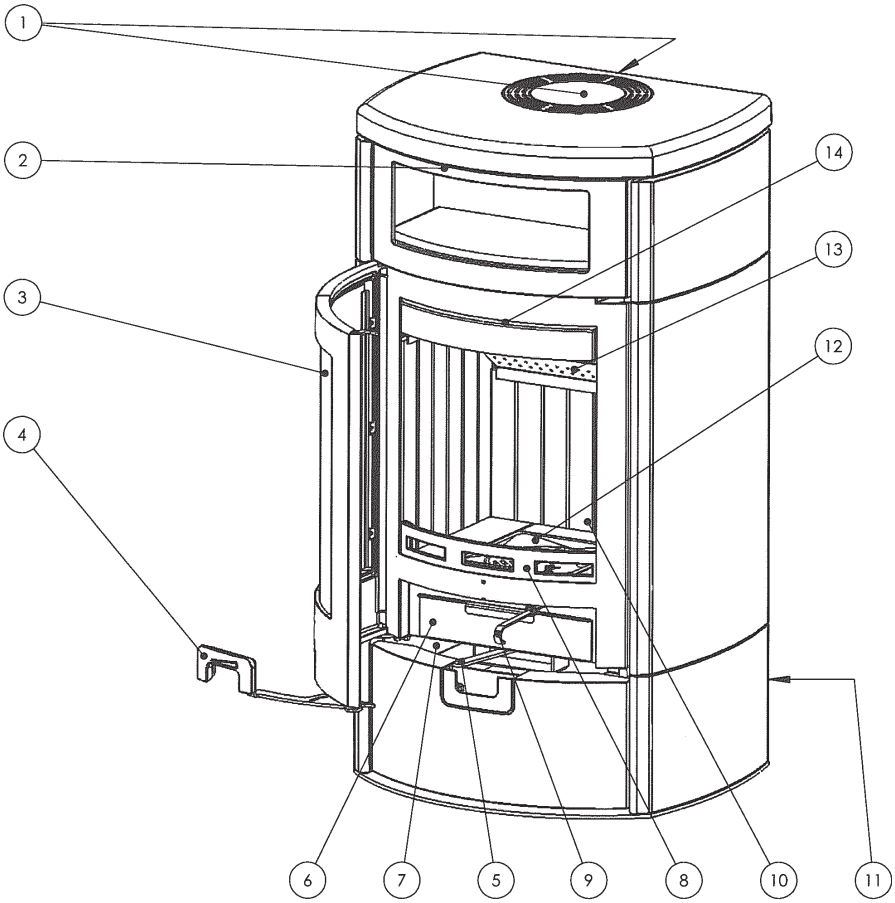

Figure 1: Operation

1 Smoke (flue gas) outlet Ø150 mm (top/rear connection possibility)
2 Convection air escape opening
3 Ceramic heat-proof glass
4 Handle
5 Air-supply slider (One combined operation for adjusting all three air supplies! Primary (partly), Secondary and Tertiary)
6 Ash drawer
7 Convection air-supply
8 Wood rack
9 Operating handle for ridling grill / Primary air-supply (The primary air-supply (ridling grill) can be operated separately at the start)
10 Cast-iron interior panels / inner lining
11 Connection for combustion air-supply Ø80 mm (under/behind connection possibility)
12 Ridling grill/Primary air-supply
13 After-burner/Secundary air-supply (pre-heated)
14 Window aeration/Tertiary air-supply (pre-heated)

- Opening the door:



Pull the handle forwards.
This releases the door from its lock and the door can then be opened.

- Operating the combustion air supply slider.

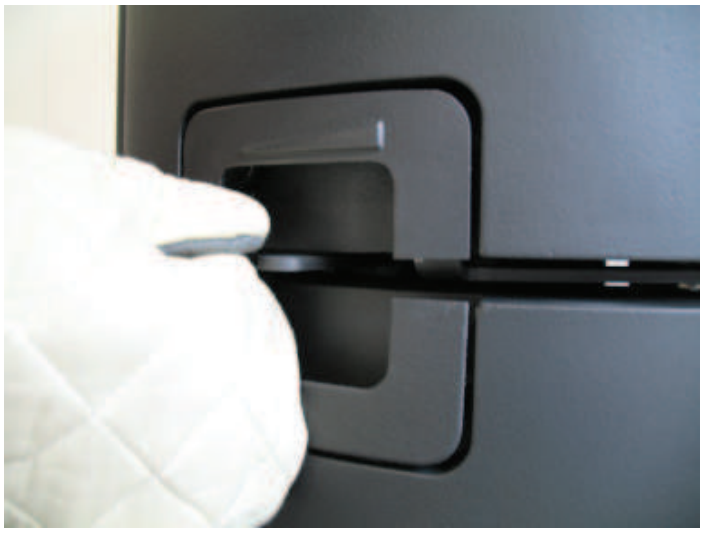

Less air : slider to left
More air : slider to right

- Use of the operating handle for ridling grill/primary air-supply.

Turn the operating handle forwards.
By pulling the handle forwards and pushing it back you operate the ridling grill and primary air-supply.

- Ash drawer:

Once you have moved the operating handle fully to the right, you can remove the ash drawer.

- Storage drawer (option):

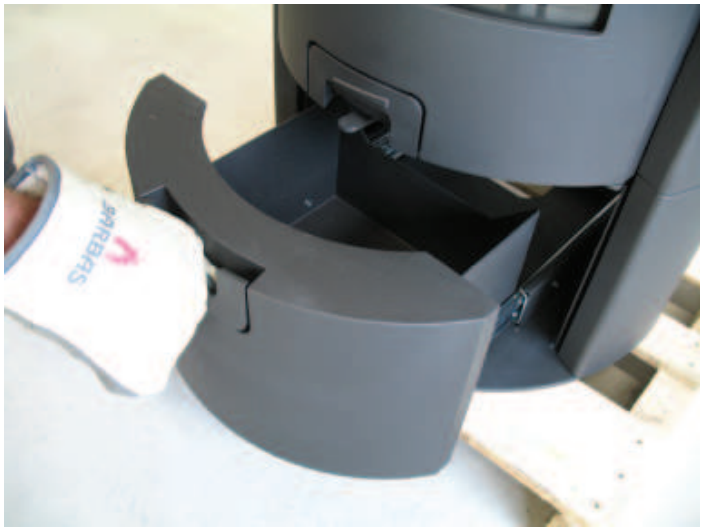

You can open the storage drawer by pulling it forward using the handle.

5. STOKING UP FOR THE FIRST TIME

If you have had your chimney breast modified or newly built, first allow your home to dry properly. Walls which have not been allowed to dry properly are a magnet for dust such as any smoke particles created when stoking up the fire or suddenly opening the door. Even scorched dust can easily be retained by damp walls. Think also of dust on the outside of the appliance or on hot radiators etc.

Check that all packaging, stickers etc. and/or all dust and waste has been cleaned up after the installation work (to avoid it getting scorched/causing a bad smell).

Check again that all moving parts are in order and that loose parts such as the retardant plate (brake plate), interior panels, ridling grill etc. are in the correct position. They may have moved during installation.

The stove has a heat-proof finish. It only hardens at high temperatures. When unpacked, it is therefore not fully hardened. It can easily be damaged at this time.
Begin stoking up the fire with a low flame (see section 6). Increase the heat gradually for approx. 2 Hours until you reach the correct output. Keep it at this level for another 2 - 3 hours. The finish will now be properly hardened and can be touched without damaging. The hardening process creates a nasty, though harmless, smell/vapour.

Check at the start of the heating season that the flue/chimney is not blocked, for example by a bird’s nest.

Adequate ventilation is of the utmost importance.

6. USE

6.1. VENTILATION

Air is a vital component of the combustion process. Ensure that there is a sufficient supply of fresh air. For each kilo of wood that you put on the fire (door closed), 10 - 15 m^3 of extra air is needed. That means 50 m^3 per hour! As you can see, a plentiful supply of air is essential.

6.2. GETTING THE FIRE GOING (Figure 1)

When you start the fire, the chimney is still cold and there is little draught. This means that the chimney's capacity to draw in air is limited. This is why the air supply must be helped by fully opening the door, air supply slide ⑤, operating handle ridling grill/primary air supply ⑨ and ash-drawer ⑥. The primary air supply is coupled to the grill position by the operating handle ⑨. If the grill is shut, the primary air supply will also be shut. Use dry, fine wood and some scrunched-up paper or firelighters to start the fire.

Leave the door ajar for 10 minutes. Do not open the door wide, as the window will remain cold. If the door is shut during this time, smoke will condense on the glass and form soot.
For more air above the fire (secondary and tertiary air): fully open the air supply slider ⑤. This air supply slide is under the door handle. Slide to the right to open.

6.3. INSTRUCTIONS WHILE STOKING

After approx. 10 minutes, the fire will be burning fiercely. You can now top it up with a few larger blocks of wood. Close the door when the new wood catches fire.

After another 10 minutes, close the ash drawer ⑥.

If the fire is still burning well, close the ridling grill ⑨. The supply of primary air is herewith automatically cut off.

N.B. The grill should be kept closed except during the lighting procedure. Your fire will then be much cleaner and more efficient (more heat, less topping up).

Using the air supply slider ⑤ you can now adjust the air supply for further combustion. Make sure the fire burns quietly.

We recommend that you maintain a substantial layer of ash (2 - 3 cm). This not only forms a protective layer for the base of the appliance but also significantly reduces consumption of fuel and allows new wood to catch light easier.

When loading the stove with fuel, two blocks measuring 25 cm long and 30 cm in diameter is sufficient. Do not add more fuel until the previous fuel has burned down to the charcoal stage. Do not leave the door open longer than necessary.

Weather conditions
In order to reduce pollution and any other inconvenience, we advise not firing up the stove when there is no wind, or in foggy/misty conditions.

Smoke development
The stove is designed for use with a closed viewing / filling door. Should you use it with the door open, under certain circumstances (presence of mechanical ventilation, draught, differences in barometric pressure) smoke may enter the room in which stove is situated.

Use of the stove
Your stove is suitable for continuous use.
The appliance is fitted with a soapstone or cast-iron casing on the outside. These casings first absorb a lot of heat (heat accumulation) before emitting (radiation / convection) warmth.
Using the stove for short spells is inefficient.

The stove may only be used in an area where the location, the building construction and the activities in the room concerned do not present any danger for operating the fire safely.

Ventilation
When using the stove, ensure a good supply of fresh air, particularly if the combustion air is drawn from the room itself. If your dwelling has mechanical ventilation, switch it off while the stove is in use.

Spare parts
Any replacement parts must be new, original parts. Use of non-original/ reconditioned parts will invalidate your warranty.

Modification
Do not make modifications to your stove. Any alteration to your stove, of whatever nature, will also invalidate your warranty.

Only open the door for filling and lighting the fire and for removing the ash. Keep the door shut at all other times.

Continuous burning with primary air (air through the ridling grill) causes a fierce, white-hot fire that can cause damage to the grill and other cast-iron parts of the stove.

6.4. HEATING ECONOMICALLY

The most environmentally-friendly and economic way of heating with wood is to have your fire hot but calm. The ash should appear to glow a soft red-orange and should not glow like a blacksmith's fire. Fires like that burn quickly and intensely, leaving little time for complete combustion.

Your fire is at its most economical when:

- Burning with the door closed. This makes the fire hotter and improves combustion.
- Using dry and clean wood (as described further in section 8).
- Combustion is regular. When burning, shut the ridling grill/primary air supply (wood-burning only).
- The bed of the fire should be composed of one material, though the fire must have easy access to air. Position the blocks of wood (loosely and evenly) horizontally on the bed of ash, so that they are separate and several centimetres away from the walls.

7. GENERAL HINTS

7.1. TIPS

- Burn dry wood only. Damp wood not only burns poorly, it causes more pollution in the appliance (window), the chimney, your room (when opening the door of the appliance, for instance) and the environment. Wood can only be classified as dry if it has been stored under a Dutch barn for at least two years (not covered with plastic). Never use painted or impregnated wood. The gases emitted when burning painted or impregnated wood are aggressive and will affect the appliance, the environment and your health.

- Ensure that your fire burns well. The smoke generated should be translucent or white and the windows of the fire will remain clean. We recommend that you do not ‘pinch off’ your fire (by closing all air openings). Doing so will hinder combustion which, apart from polluting the atmosphere, will lead to deposits of soot and tar in your chimney (which, unchecked, will increase the risk of chimney fire).

- Keep the door shut when the fire is burning. Doing so improves the performance of your fire 8 - 10 times, benefiting the environment and the heat in your home (less topping up, see section 7.2). You will also prevent fire damage from any particles the fire ‘spits’ out (this is a particular problem with softwood from conifers). If your floor contains flammable material, an extra floor plate is required.

- Avoid lighting a fire in misty or still conditions. If the wind is still, there is hardly any draught in the cold chimney. As smoke is heavier than air, there is a chance that smoke will enter the room. If there is mist in the air, smoke coming out of your chimney will cool quickly and fall, causing problems in your area.

- Do not extinguish your fire with water - let it burn out. The part of the inner lining that is in direct contact with the fire is clad with cast iron sections or fire-resistant material. Sudden changes in temperature may lead to it deforming or cracks appearing.

- Chimney fire.
  If, despite all the precautions, a fire should occur in the chimney (you generally notice that because of a roaring sound in the chimney), do the following:
  - Immediately shut the chimney flap (if fitted)
  - Immediately shut the air supply to the fire and the doors
  - Call the fire brigade (112)
  - Quickly quench the fire in the appliance with sand or soda in order to prevent smoke in your house
  - Ventilate
  - Never use water to put out the fire
  - If there has been a fire in the chimney, have it swept and inspected for damage and leakage

7.2. OUTPUT / EFFICIENCY

In practice, combustion is all about loss. This entails:

- Loss through excess heat leaving the chimney, rather than going into the room.

- Loss through insufficient combustion, such as CO (carbon monoxide) and soot particles.

- Loss through excessive unburnt fuel in the ash.

The rate at which fuel can burn completely is called the output. A well-stoked fire achieves output of 75% and thus falls into the category of high-output/ low emissions fires. This means that you benefit directly by using less wood to achieve the same level of heat. The environment benefits as well: a well-stoked, high-output appliance means less pollution and fewer odours.

Adverse effects on the output are:

- Burning the fire with the door open. A warm chimney works in the same way as an extractor. When the door is open, the chimney draws in much more air than is necessary for combustion. This relatively cool air cools down the fire.

- Excessive chimney draught. The combustion air does not reach the fuel, but leaves the appliance via the chimney. The fire cools and the combustion quality decreases.

- Using too much wood. This is a problem if your fire is too small. In that case, it becomes overloaded and burns more wood than heat emitted. In this case too the fuel cannot burn completely. More to the point, there is not enough air to mix with the flames. This has an extra impact on the environment.

- Admitting too much air under the fuel (Operating handle for primary air/ridling grill.).
  Combustion is raised to high intensity (like a blacksmith's fire). Combustion really needs time. If combustion is too intense, there is insufficient time for the fire to radiate all the heat.
  The chimney will become excessively hot and the same will be true of the escaping smoke.
  This heat is thus lost.

8. FUELS

8.1. WOOD

Suitable fuels are:

- All sorts of clean wood (forested). The wood must have been dried for at least two years. Well-dried wood has a humidity percentage between 10 and 20%.
  Recommended dimensions: length 25 cm; outline 30 cm.

- Compressed wood blocks without binder (see wood dimensions).

- Hard woods burn slowly and easily form charcoal; for example hornbeam, oak, ash, beech, elm and birch. Softwood burns with more flame, but forms less charcoal and radiates less heat. Examples are spruce, pine, poplar and linden.

Unsuitable fuels are:

- Painted, bonded (chipboard, MDF etc.) or impregnated wood, plastic and other flammable waste. Stoking a fire with this is completely forbidden. The combustion gases released by these materials are aggressive and will attack your fire and the environment.

- Paraffin-containing open fire lighters <u>are not suitable</u> for your stove. A closed stove generates more heat than an open fire, thus the paraffin will melt out of the blocks prematurely.

- Damp wood burns poorly, is unsuitable and produces too much smoke (including in the room when you are topping up the wood), dirties the glass, leaves deposits in the chimney and delivers about half the heat output of dried wood.

The appliance is also suitable for burning coal.

9. AMOUNT OF FUEL

9.1. AMOUNT OF FUEL

Each appliance is constructed for a certain maximum amount of fuel. Remember that the more fuel you put into your stove, the hotter it will become and overheating may even occur. If this happens, there is a risk of fire. It may also damage your appliance and chimney. BARBAS will not assume liability for damage caused by overheating.

If you have chosen the right appliance for your room, it will provide sufficient heat with a single layer of wood blocks (a wood block is approx. 25 cm long and 30 cm around the edges).

Burning one layer of wood can lead to varying outputs. When used correctly, one load will burn in around one hour. Putting in too much wood at once can lead to the appliance being overloaded.

You can best vary the capacity of your appliance with the amount of fuel.

Fuel required for an output of approximately 10 kW and an efficiency of 75%:

Wood:	2 blocks, each around 1.50 kg
Briquettes:	5 briquettes, each around 0.5 kg
Coal:	around 2.0 kg (≈ 7 kW)

9.2. HEAT RADIATION

The table below shows the temperatures which can theoretically be achieved by burning wood.

Heat radiation	
Sort of fuel	**kWh/kg**
Dry wood (average)	4.3

The heating value of wood (18.7 MJ/kg at 0% humidity) is not affected by the sort of wood. What does make a difference is the relative humidity of the wood (15.6 MJ/kg at 15% humidity).

10 . REGULAR MAINTENANCE

• Emptying the ash drawer	:	Weekly, 48 hours after last heating
• Cleaning the glass	:	As required
• Door/ash drawer seals	:	Check annually before heating is resumed. Replace as necessary
• Sweep and inspect chimney	:	Annually before heating is resumed
• Fire hearth interior panels Insulation-plates	:	Check annually * Clean interior panels as necessary with wire brush
• Ridling grill	:	Check annually for cracks/breakage
• Sliders/flaps	:	Check function annually
• Convection channels	:	Clean annually
• Paint	:	Annually, if necessary touch up with BARBAS heat-resistant paint (do <u>not</u> use with open fires)
• Parts	:	Individual parts for replacement/ accessories are available from your BARBAS dealer Use only original parts
• Modifications	:	Introduced modifications to the appliance are not permitted

11. REPLACEMENT PARTS

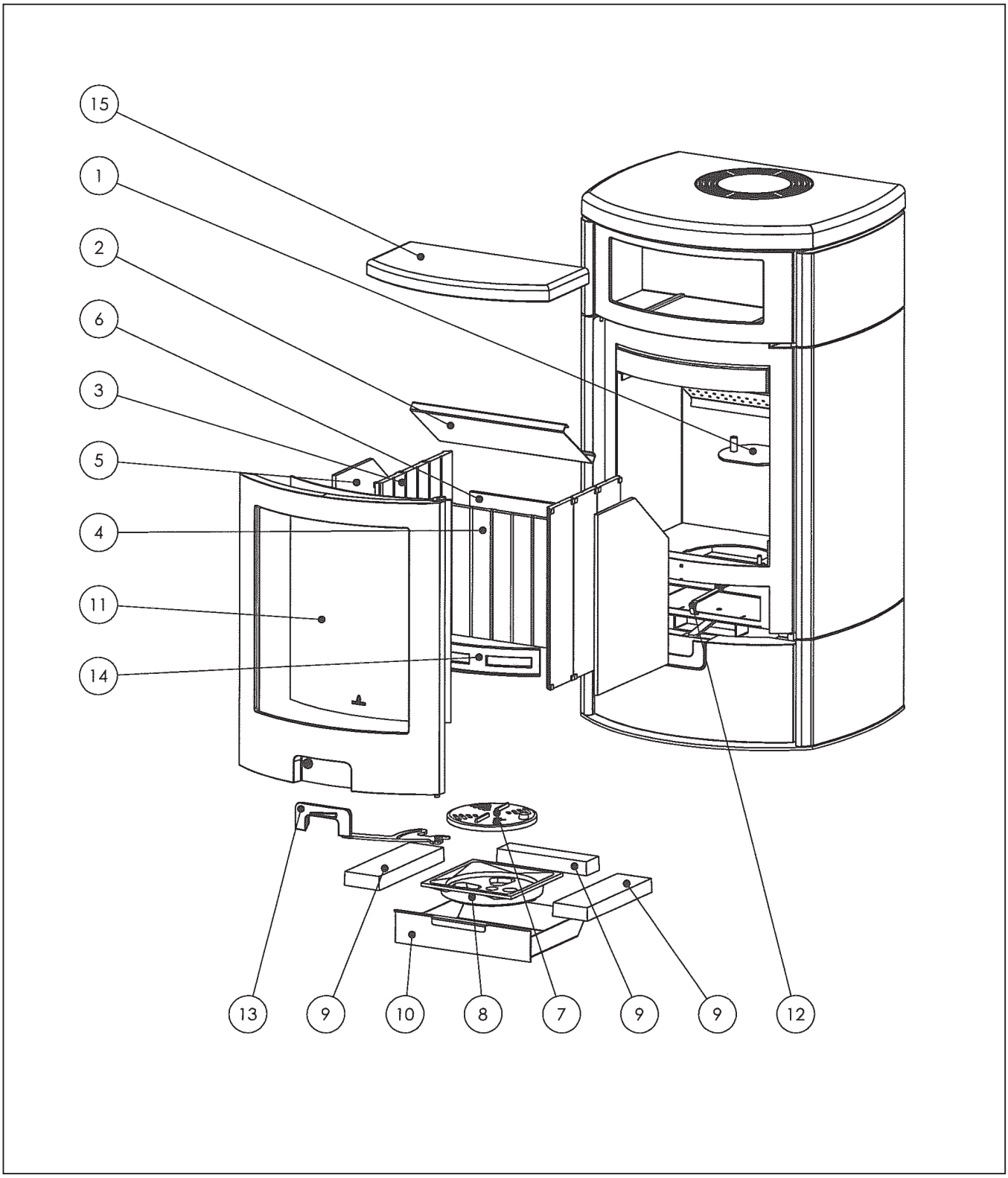

ECO 810

Replacement parts

item no	part no	description	number
1	306967 + - 2x spacer sleeve, L = 26 mm - fitting material	Small brake plate above (Only use with a top flue connection)	1
2	322484	Retardant plate (Brake plate) below	1
3	322138	Cast-iron interior panel (left/right) 395 x 100	6
4	322135	Cast-iron interior panel (rear) 280 x 100	4
5	322530	Insulation plate (left/right) ECO 800/810	2
6	322529	Insulation plate (rear) ECO 800/810	1
7	301271	Ridling grill rosette	1
8	301270	Ridling grill container	1
9	323388	Base stone set ECO 800/810	1
10	323840	Ash drawer	1
11	322051	Glass ECO 800/810	1
12	323836	Ridling grill handle	1
13	323841	Door handle ECO 800/810	1
14	323842	Wood rack	1
15	322050	Soap stone oven niche	1
	323857	Cover plate (instead of storage drawer) ECO 800/810	1

When ordering, please give the serial number.
(This series number is shown on the data plate)

12. DIMENSIONS

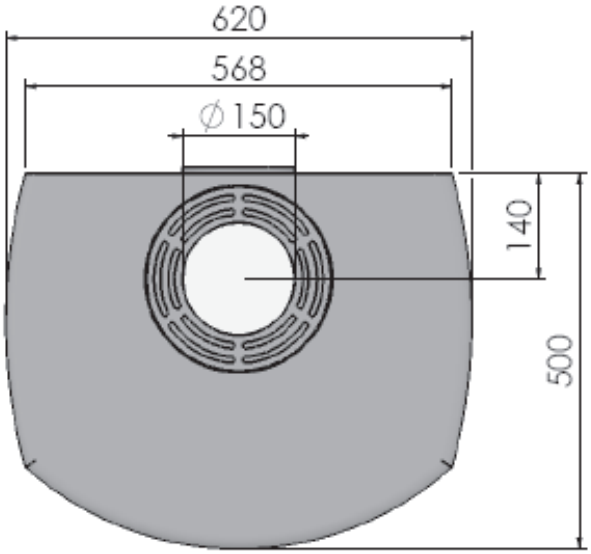

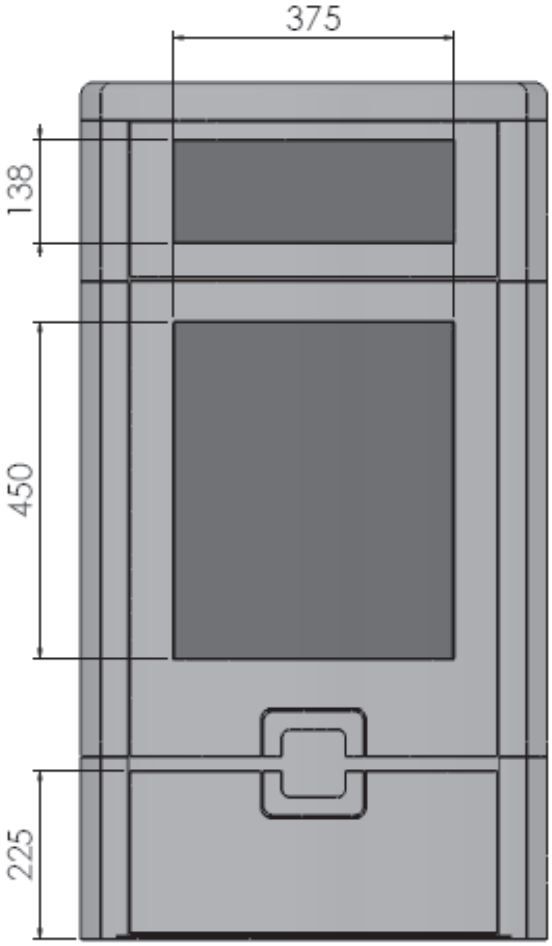

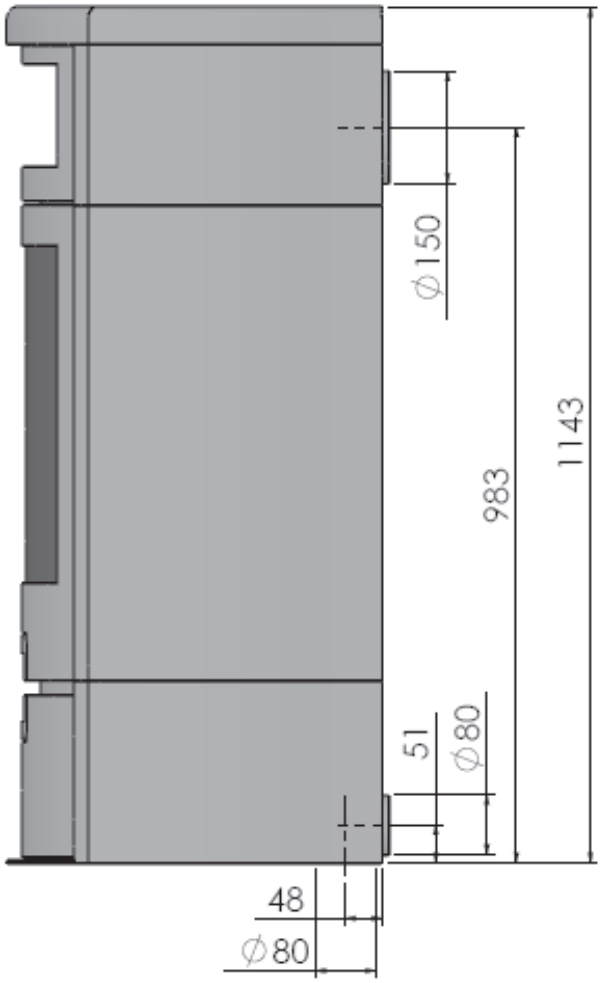

13. TECHNICAL DATA

Type:	**ECO 810**
	Suitable for periodic use
Dimensions (hxwxd)	114 x 62 x 50 cm
Weight	ECO 810 - Soapstone : 332 kg
	ECO 810 - Cast iron : 259 kg
Combustion:	
Measured in compliance with	EN 13240:2001 and EN 13240-A2:2004
Fuel	Wood
Nominal output	10 kW
Flue gas mass flow	8.0 g/s
Flue temperature	402°C
Chimney draught	0.12 mbar
Inside:	
Dimensions	Surface area 1280 cm^2 = 40 x 32 cm (w x d)
	Clear fire opening 38.0 x 37.5 cm (h x w)
Interior panels	Cast iron
Insulation plates	Vermiculite, 950 kg/m^3, 1150°C
Bottom stones	Fire-proof concrete, 1300°C
Inner lining	Steel (heat-resistant and rust-proof)
Retardant plate (brake plate)	Stainless-steel plate
Ridling grill	Cast iron
Outside:	
Construction	Sheet-steel casing
Doors	Curved door, hinged on left. Self closing.
Outer finish	- Soapstone in combination with cast-iron parts
	- Cast iron
Flue gas outlet	Ø150 mm (top and rear connection)
Combustion air supply	Ø80 mm (rear and bottom connection)
Operation:	Air supply slider for combined operation of the whole air supply for combustion. This slider is under the door-handle.
	Operating handle for combined operation of the ridling grill and primary air supply. This handle is located behind the door, above the ash drawer.
Ash collection:	Ash drawer

14.FREQUENTLY ASKED QUESTIONS

How often should I have my chimney swept?

At least once a year. If you use your fire more than three times a week on average, have your chimney swept more often.
Have the chimney swept by a recognised company. Your fire insurance policy may make this a condition and ask for proof.

In terms of stoking up the fire, what is the difference between a stone and cast-iron lining?

Both linings serve to protect the wall of the stove against flames. The advantage of a cast-iron lining is that it is much stronger than a stone lining. It will not break after a few years; cast iron will not be damaged if you push in the wood into the stove any harder than usual. Cast iron radiates more heat out to the room than stone. This improves the output.

What is the difference between nominal heat output, nominal heat input and efficiency?

Nominal heat output represents the net amount of heat that the appliance generates.

The total heat content of the fuel is the so called nominal heat input.

Efficiency is the percentage of fuel converted into useful heat. It is the ratio of nominal heat output and heat input.

How can I keep the glass clean?

By making a point of using dry, clean wood in the stove. Wood that is too damp immediately gives off lots of ash.

Make sure the seals are in good working order. Any air seeping out around the glass part of the door will cool the air, resulting in the fire not burning cleanly.

How much wood will I use?

That depends entirely on how you heat your room, what sort of appliance you have and the size of the room you are heating. As a general rule, a fire used in accordance with our guidelines (no air under the fuel, topped up once an hour) each kg wood produces an output of about 3 kW.

In an averagely-insulated house, the general rule is that in a room of 80 m^3, you need a fire with an output of around 7 kW. For each subsequent 10 m^3, add on 0.6 kW.

In a relatively well-insulated house, the general rule is that in a room of 80 m^3, an appliance of 5.5 kW is adequate, and for each subsequent 10 m^3, you need to add a further 0.4 kW.

Can a wood-burning stove/fitted fire be connected to a central heating installation?

The Barbas range does not have any stoves/fires that can be connected to central heating installations. We do not advise attempting it !!

How do I know if I'm heating correctly?

Follow the instructions in this manual.

The flames should play softly across the wood and the wood should burn evenly.

Once the fire has been burning for a short time, the smoke from the chimney should be almost translucent.

What is wrong with a smoking chimney?

A seriously smoking chimney means that combustion is less than optimum. There may be a number of reasons for this. If the fire has only just caught on, or has recently been topped up, some smoke is normal. By opening the door for a short period, the wood will catch fire quicker and the smoky period will be shorter.

If you leave the fire door open, and especially if you burn damp wood, the result will be a lot of smoke. In both cases, the combustion temperature is too low. This leaves numerous dangerous compounds intact, which means more deposits in your chimney and more waste into the environment.

What is the influence of soapstone and cast iron outer finish on the stove?

Soapstone and cast iron functions as a heat buffer.
Soapstone: Its combination of chalky composition and sedimentary structure means that soapstone heats up more quickly than other sorts of stone and emits heat more gradually than other stone.
Both soapstone and cast-iron equalise the irregularity that is a characteristic of burning wood (heat radiated is initially double; later half the average).
However, this means that a soapstone or cast iron fire has a longer warm-up period. However, it will continue to give off heat for longer.

The soapstones are not like the ones in the brochure. Is this right?

Soapstone is a type of stone that is found in mountain walls (it is sawn out). Depending on the place in the mountain, the structure may vary. It may be more or less porous, its structure may be wild or calm. This means that the colour and finish may also vary. Stone quarried in the past will thus look different to stone quarried today.

What should I do if the wood does not catch fire?

This probably means that the wood is damp. Remove the wood and replace it with dry wood. If necessary, make a fire with wood briquettes. They are always dry (they have a moisture content of <10%).

The wood burns up too quickly. What should I do?

Ensure that air cannot get in underneath the fuel. Close the primary air supply/ ridling grill and ash drawer. Under these conditions, the layer of ash should no longer burn bright orange/white but red.

If there is a draught (due to strong wind), air intended as secondary air for above the fuel may enter through the openings above the door and flow straight down beneath the wood. If this happens, close the air supply-slider slightly.

There may be too much of a draught in your chimney, particularly if it is very high (in excess of 8 m). Ask your supplier to fit a flue valve or flue damper. This may not be possible in all cases.

Can I leave my fire unattended?

Only when it is burning peacefully with little wood and if the door is closed as well as the primary air slides. Do not leave children unattended while the fire is burning.

Do I have to take any extra measures if the room I am heating has an extractor fan?

If the room in which the fire is located has permanent air extraction, the combustion air supply connection (behind/under) must be connected directly to the outside air. The combustion air will then be drawn in from outside the room.

What is creosote?

Creosote is a tar-like deposit which is left in the chimney. It is formed in poor combustion conditions when burning wood (damp wood, pinching off the air supply to the fire or burning impregnated or painted wood for example). Creosote ignites at approx. 500°C. This temperature can easily be reached if the fire is raging. This means that deposits of creosote in your chimney could cause a chimney fire.

What happens when wood is burnt?

The combustion process.
The combustion of wood involves the following steps:

Drying
The first step is that the fuel (wood) dries out. Even at low temperatures (<100°C), any moisture still in the wood will evaporate. This drying procedure implies a significant loss of energy if wood which is 'too' damp is burnt. The right degree of moisture is achieved after 1.5 - 2 years of drying. The moisture content is then
15 - 17%.

Decomposition
At moderate - high temperatures (150°C - 350°C), the decomposition process can be discerned. This is when the chemical structure of the fuel breaks down. This process involves the creation of volatile compounds such as carbon monoxide (CO), water vapour (H_2O) and methane (CH_4). In addition, substances which are volatile at decomposition temperature but condense at lower temperatures are often released. These are the tar-like components (this by-product is also known as creosote, which is deposited in the chimney and cold parts of the fire in poor burning conditions).

Combustion of the products of decomposition
The volatile compounds burn in the gas phase if O_2 (air) is added. The ignition temperature of these volatile compounds is approx. 550°C.

Combustion of solid hydrocarbons
The solid component that remains consists of pure hydrocarbons, which will burn at approx. 800°C if O_2 (air) is added.

INTERFOCOS B.V.
HALLENSTRAAT 17
5531 AB BLADEL
NEDERLAND
E-mail: info@barbas.nl
Internet: www.barbas.com

02 - 011008 - 323190