CamOne Gravity Air 2D Gimbal

Manual

This manual is available here: www.CamOneTec.com/gimbal

Vers. 1.0

"FlyCamOne" and „CamOne" are registered trademarks of ACME the game company GmbH, Germany
© copyright 2014 ACME the game company GmbH
This user manual is protected by international copyright laws.
No part of this manual may be reproduced without the prior written permission of ACME the game company GmbH
in any form or by any means, electronic or mechanical, including Photocopying, recording or storing in any information storage and retrieval system, reproduced, distributed, translated, or transmitted.

Safety advice

WARNING:

PLEASE NOTE THE FOLLOWING ADVICES
TO AVOID SHOCKS OR DAMAGES
ON THE PRODUCT:

- DON'T USE THE PRODUCT WHEN RAINING, OR AT WET PLACES
- KEEP THE DEVICE AWAY FROM WATER
- ONLY USE ORIGINAL SPARE PARTS
  DO NOT DISMANTLE THE DEVICE. INSIDE ARE NO PARTS THAT CAN BE REPAIRED BY THE USER. THE SERVICE SHALL BE PERFORMED BY THE SUPPLIER OR PRODUCER.

SERVICE & SUPPORT

ACME the game company GmbH
Boikweg 24

33129 Delbrück
Germany

Tel: +49 2944 9738 30
service@camonetec.com
or
http://www.camonetec.com

Information on the contained LiPo- Battery

Attention
If a battery is incorrectly replaced, there is danger of explosion.
Replace the battery only with the same manufacturer's recommended battery or an equivalent type. Dispose of used batteries according to the manufacturer's instructions.

Risk of fire, explosions and burns. Do not dismantle the battery. Do not exceed the below quoted temperature and do not burn the battery.

LiPo-Battery <50°C

CE Declaration

We hereby declare that this model meets the essential requirements and other relevant provisions of Directive 2004/108/EC. A copy of the Declaration of Conformity can be obtained at the above address.

This product contains a LiPo- battery. Bring used batteries to a designated collection point..

WEEE Reg. Nr.: DE64989527

Information for Users on Disposal of electrical and electronic equipment

According to the company principles of ACME the game company GmbH high-quality reusable components have been installed in this product. This symbol on the products and / or accompanying documents means that the product must be disposed of separately at the end of life from household waste.
Bring these products, even the battery for proper and environmentally friendly disposal of your nearest collection (or recycling).

Content

Please check the completeness before using the product!

Gimbal	Camerabail 2x	Small parts, screws etc.
Connection cables 2x	**Mountingbail**	**Bellows 8x**
Retaining bracket 2x	**Mounting plate big**	**Mounting plate small**
	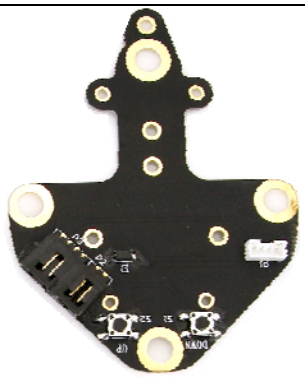	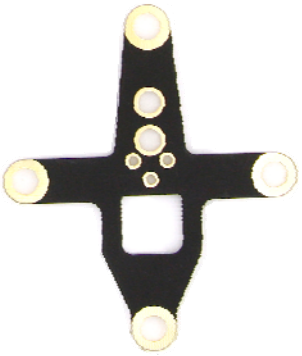

Required tool

Allen 1,5 + 2,0mm Screwdriver
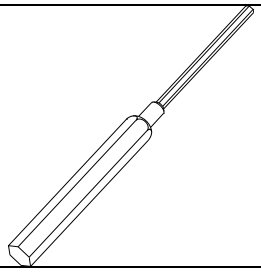

Important note!

More information, adjustments and tips are available 0n the CamOneTec webpage (**http://www.CamOneTec.com**).

Please strictly follow this manual to mount this device!

Index

Safety advice……..………………..…………………….……………….………………….……………………..2
Content / Required components...........……………………………………………………….…...……………………3
Important notes...……………………………………………………………………………………….……….…….3
Index...................……………………………………………………………………………………………………4
Disclaimer and warnings.....................……………..…………………..……………………………………………….4
Connection / Mounting advice..……………………………………………………………………………………5
Mounting………..………………………………………..…………………..……………………………….…….5
Cable connection……………………………………………………………………………………………..……...7
First use...................……………………..…………………………………………………………………………7
Setting the tilt position.........………………………………………………………………..………………………..8
Technical Details…………….....……………………………………………...……………………………………..9
Warranty..........................……………………………………………………………………………………….11

Disclaimer and warnings

Read these instructions before commissioning and use of the article and its components!
With the start of the article, you agree to the terms of the disclaimer and agree to the instructions.

Assemble the items according to the instructions. Any changes to this or uses of third-party products / spare parts can cause damage.
This excludes the acquisition of warranty claims!
The article is already in a functional state after delivery. Take your time before you start.
There is no responsibility for damage or injury from the manufacturer, importer or distributor acquired, resulting from the use of the product.

Make sure prior to attachment to your flight model which can optionally consist requirements and recommendations of the manufacturer for the use of gimbal system.

Operating voltage 7.0V -17.0V (2-3S LiPo recommended)
Use only with inserted camera!
Outer influences while operation may damage the Gimbal!
Please note that the flight time of your model decreases as soon as you connect a Gimbal and further FPV- equipment!

When using video transmitters, make sure that its connection cables do not interfer the Gimbal.

Connection / Mounting advice

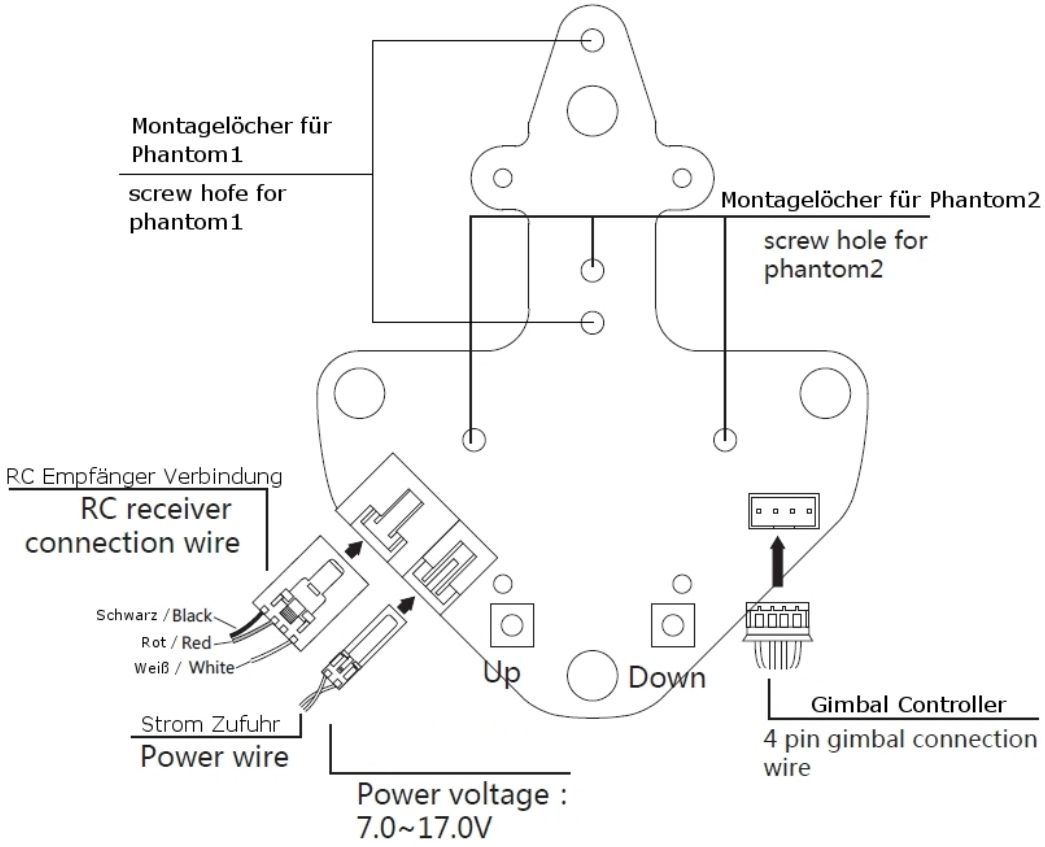

Mounting

Use the supplied screws to mount the unit.
If there are no matching holes inside your RC models fuselage, please contact your supplier for further advice.

Make sure that the screws are tightened before every flight. The Gimbal needs to be mounted downwards.

1. Gimbal Mounting
Screw the Mountingbail with 2 screws (M2x6mm) and spring washers with the Gimbal-System. The tabs shall point in direction of the camera holder. Use a 1.5mm Allen screwdriver to perform this work.

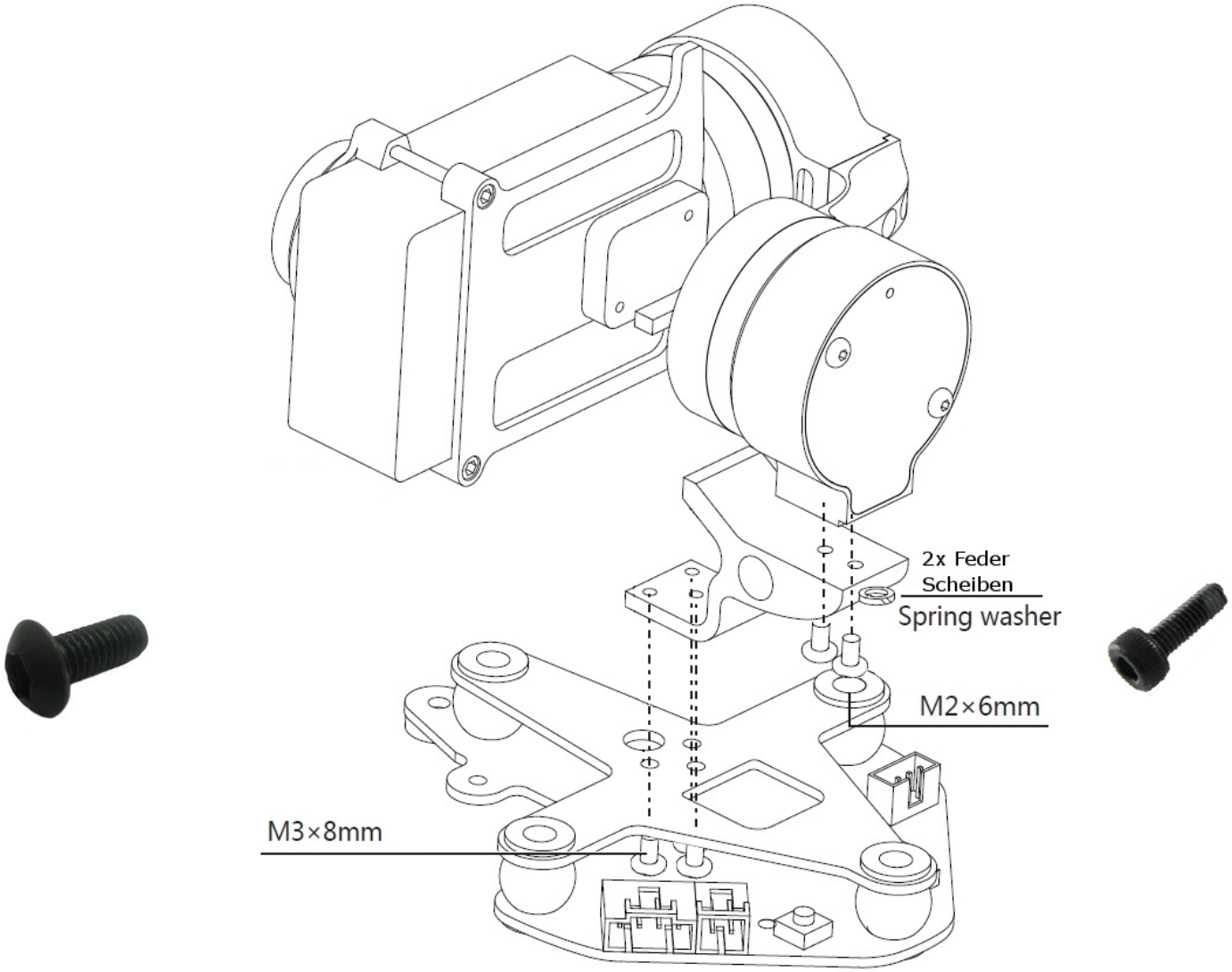

Attach the mounting bracket with three screws (M3x8mm) on the small plate. Insert the screws through the plate and fasten them to the mounting bracket.

2. Bellows and mounting on the RC- Model
Push the bellows into the 4 holes on the big mounting plate (see picture).
Make sure that these are mounted firmly and even.

Screw the big mounting plate onto your model.
Use the matching screws according to your model. If needed, you can also use the small white plates to avoid a direct contact between main board and RC fuselage.
Please note, that the side with the connection ports of the main board shall be visible from below.

The big mounting plate already has some holes that you can use to mount it on your RC model.

Now place the pre-mounted plate with the Gimbal on the big mounting plate with the bellows.
Push the bellows into the plate.

When the bottom part of the Gimbal is completely mounted and screwed, insert the mounted bellows into the bigger plate. Make sure, that the side with the ports points to the lower plate.
This work requires some patience.
If this has been successful, connect the fixed cable from the Gimbal (white/wide plug) with the matching port P1 on the bigger plate.

3. Camerabail

You will find 2 bails for the following camera models inside this content:
-CamOne infinity
-GoPro Hero 3 / 3plus Series

Choose the matching one for your camera. Make sure that you tighten the bail safely.

Cable connection

The operation voltage is
between 7.0V and 17.0V

The supply of the Gimbal is made via the port P2 on the bigger plate.
It comes with two connection cables.
One with an open end and one with a connection to the balancer port of a 3S LiPo batteries.
Select a cable and plug it into the port P2. Make sure that the cable is fixed firmly and secure.
The power is supplied via the operating voltage of the model. The easiest way is to connect it to the balancer port of the battery. Make sure that this cable is not pinched.
Take the Gimbal into service only when a camera is inserted!

First use

All parts have been mounted by you according to the instructions of this manual. The Gimbal shall absolutely not have any contact to the ground, the landing gears of your model shall always be longer!
Power up your model before you power the Gimbal.
Place the model on an even surface and do not move it until the Gimbal has been adjusted.
After connecting to a power source, the blue LED of the Gimbal will start flashing. The Gimbal will adjust itself within a few seconds.

DO NOT MOVE THE GIMBAL BY HAND DURING THIS PERFORMANCE!
Take the gimbal into service only when a camera is inserted!

Test the function of the Gimbal via manual movements of the flight model. Pan the model for example by hand from right to left and check the always straight alignment of the Gimbal.

Setting the Tilt Position

On the big plate there are two buttons (S1/Down and S2/Up). With these, you can fix the camera orientation in the tilt position.

This position can be fixed as following:
Keep pressed both buttons for 5 seconds and then set the requested position through the particular button.

You can reset this setting as following:
Keep pressed both buttons for 5 seconds, release and push them again for 5 seconds.

The Tilt Position can also be controlled through a free channel on your RC system by using a rotary switch. To do this, use the supplied RC- Cable and connect it to port P3 on the Gimbal. When connected, the buttons S1 and S2 are automatically deactivated.

Example on the DJI Naza system:
>Connection with white plug
on the F1 port
>Connection with black/red plug
on the F2 port

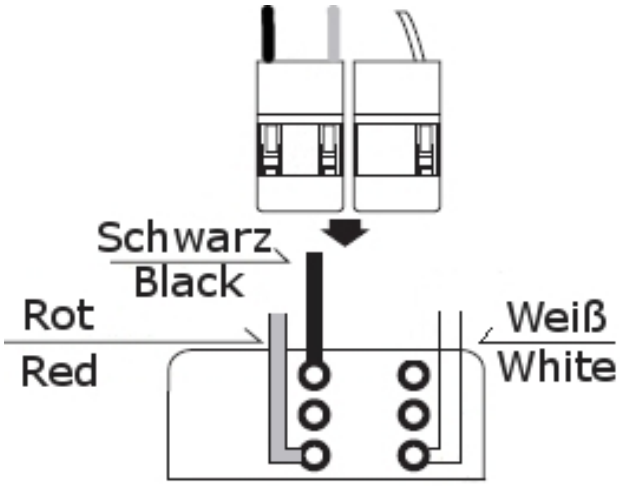

To have access on the ports, you need to dissamble the model.

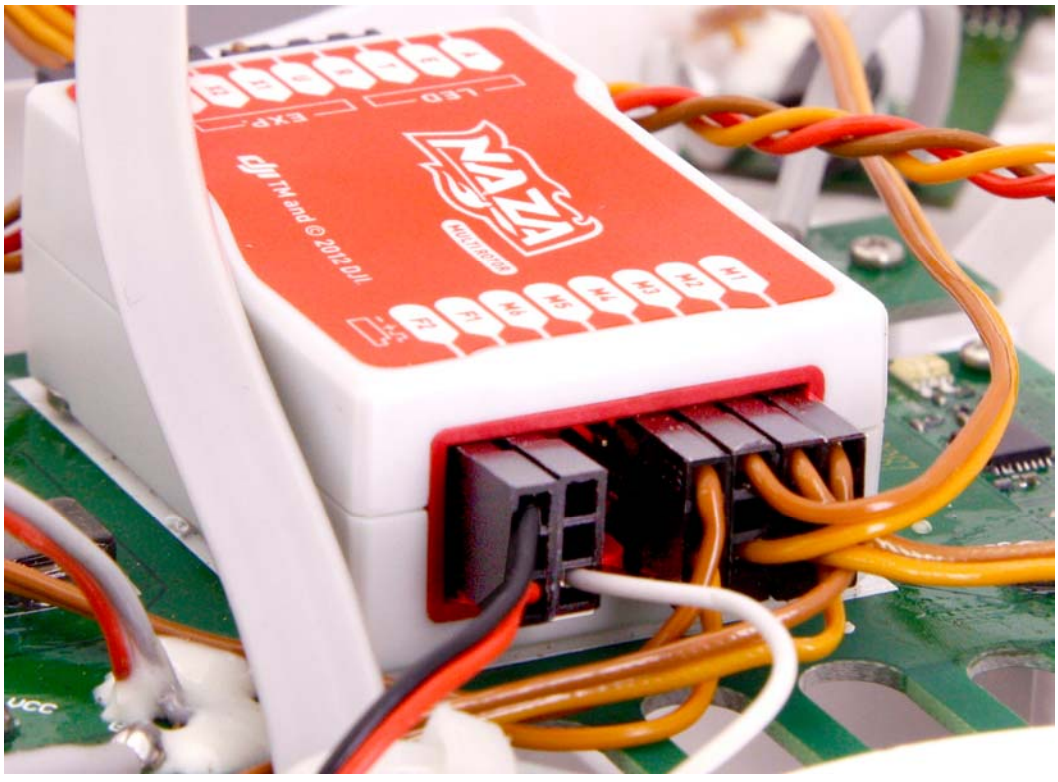

Settings on the DJI Naza-M V2 Software as an example:

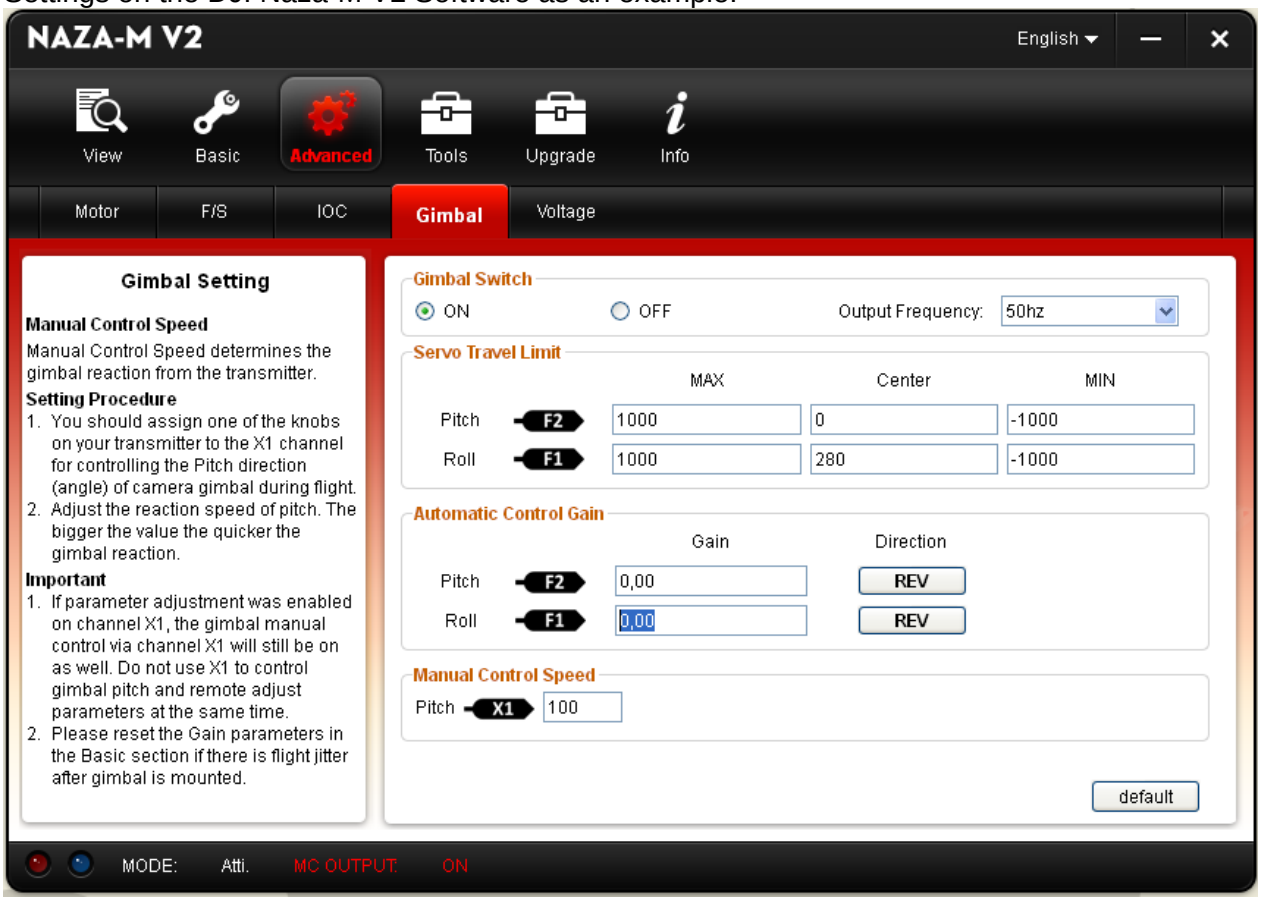

You can align the tilt position of the camera on the Gimbal via the rear X1-channel on the DJI Phantom Remote Control.

Technical Details:

- Operating temperature	0°C ~ 50°C
- Weight	170g
- Size	90x80x90mm

	Min. Spannung / min working vol.	Stdrd. Spannung / std. working vol.	Max. Spannung / max. working vol	Hinweis/ Advice
Betriebsspannung / Working Voltage	7,0V	12,0V	17,0V	2S-4S LiPo
Feststehende Signaltaktrate/ static attiude tracking accuracy	±0,01°		±0,04°	
Bewegung Signaltaktrate / Motion attiude tracking accuracy	±0,1°	±0,2°	±0,5°	
Überlastschutz / Overload protection			0,8A	
Zeit Überlastschutz / overload protection time			600S	Nach 6 Sek. /after 6 sec.
Max. Drehmoment / Max torque			330us	
Tilt / Controll pitch angle accuracy	+ 45°	0°	-90°	
Rollwinkel / Controll roll angel accuracy	+45°	0°	+45°	
Tilt Rate		10°/S		

Spare parts and accessories for the DJI Phantom Multicopter

Artikelnummer	Bezeichnung	EAN-Nummer
DJB100	DJI Phantom Quadrokopter RTF-Kit	4260033046079
DJB110	DJI Phantom Propellerschutz	4260033046093
DJB111	DJI Phantom Landegestell	4260033046109
DJB112	DJI Phantom Ersatz Elektromotor	4260033046116
DJB113	DJI Phantom Propellerpaar 8x4,5 (1x Links /1x rechts)	4260033046123
DJB114	DJI Phantom ESC red front (rote LED´s)	4260033046130
DJB115	DJI Phantom ESC green rear (grüne LED´s)	4260033046147
DJB116	DJI Phantom Kompass Modul	4260033046147
DJB117	DJI Phantom Gehäuse Schalen (Set)	4260033046154
DJB118	DJI Phantom LiPo Akku 3s 2200mAh	4260033046161
DJB123	DJI Phantom Verbindungsteile	4260033046284
DJB124	DJI Phantom Schraubensatz	4260033046291
DJB128	Carbon Propeller Set 1xL + 1xR 8.0x4.5	4260033041517
HEOS0100	LiPo Warner & Akkutester 1-8S (Pieper)	
DJB131	CamOne 2 Axle Kamera Gimbal	4260033041548
HS1132	LiPo Ladegerät / Balancer 2/3 12V Input /KFZ	4260033040466
AA1119	KFZ Adapter 12V (für HS1132)	4260033047748

CamOne FPV cameras and accessories

Artikelnummer	Kurzbezeichnung	EAN-Nummer
FCHD01A	FlyCamOne HD 1080p 96° Kamera inkl. MGN-Mount	4260033047908
FCHD02	FlyCamOne HD Screen 2,5“	4260033049520
FCHD03	FlyCamOne HD Transmitter Set 5.8GHz	4260033049537
FCHD05	FlyCamOne HD RX-Kabel 720p	4260033049551
FCHD08	FlyCamOne HD V-Eyes Set	4260033049582
FCHD09	FlyCamOne HD 720/1080p Lens 133°	4260033049599
FCHD10	FlyCamOne HD 720/1080p Lens 170°	4260033049605
FCHD15	FlyCamOne HD GPS Modul	4260033049650
FCHD16	CamOne Rapid Rush 16GB Micro SD-Card Class4	4260033049667
FCHD38	FlyCamOne HD FPV Head inkl. 2 Servos	4260033049889
FCHD49	FlyCamOne HD 720/1080p Lens 96° AS	426003304
FCHD50	FlyCamOne HD 720p Venus	4260033049971
FCHD51	FlyCamOne HD 720p Mars	4260033049964
FCHD52	FlyCamOne HD 720p New Moon	4260033049957
FCHD53	FlyCamOne HD 720p Nova	4260033049940
FCHD58	FlyCamOne HD RX-Kabel 1080p zoom/pan/tilt	4260033047588
FCHD74	FlyCamOne HD 7" Screen 5.8 GHz Dual-Receiver	4260033045843
FCHD80	FlyCamOne HD eco 1080p 96° CMOS	4260033046963
FCHD80-B	FlyCamOne HD eco 1080p 142° CMOS	4260033046581
COIN01	CamOne infinity 1080p Full HD Kamera	4260033041906
FCHD91	CamOne Video Transmitter 5,8GHz 25mW	4260033047496
COIN22	CamOne Infinity 170° Linse	4260033042620
COIN31	CamOne Infinity 142° Linse	4260033042811
COIN32	CamOne Infinity 96° Linse	4260033042828
COIN34	CamOne Infinity 3fach Akku-Lader	4260033049414
COIN36	CamOne Infinity Power + View Kabel	4260033049346

Guarantee
The consumer is without prejudice to any claim against the seller a
Manufacturer's Guarantee under the conditions set out below :

» New devices and their components , or arising from manufacturing and /
Material faults within 24 months of purchase develop a fault , are of
ACME the game company GmbH exchanged at its option against a prior -art device to the original purchaser or repaired free of charge .
For wear parts , this warranty is valid for 3 months from purchase.

" This warranty does not apply if the device defect is attributable to improper treatment
and / or non-observance of the information presented is based .

" This warranty does not extend to self- paid by the customer services
(eg conversions)

»Warranty claims are to be claimed at once , to the knowledge of the warranty claim .

" Ownership of devices or components that are returned to ACME the game company GmbH in the framework of exchange, become the property
ACME the game company GmbH .

» By services rendered under warranty , the warranty period is not extended

" Insofar as no Guarantee default exists, ACME the game company GmbH reserves the right to charge the customer for replacement, repair , or shipping costs. The customer will be informed in advance .

Service & Support
ACME the game company GmbH
Westwood
Boikweg 24
33129 Delbrück
Germany
Phone: +49 2944 9738 30
E-Mail: service@camonetec.com

FPV (First Person View)
The premier competition of model flight
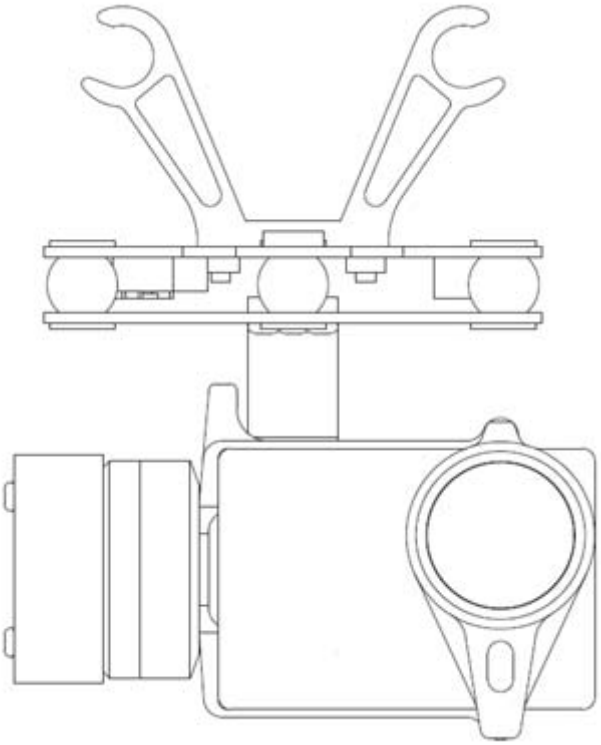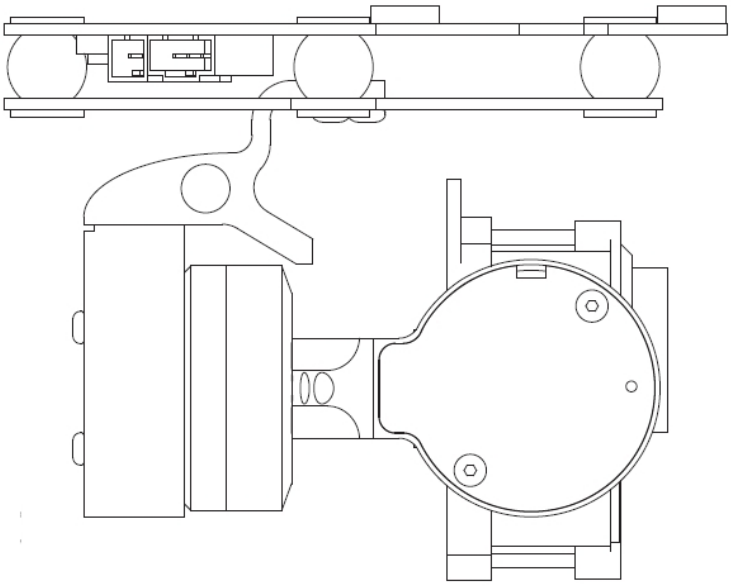
DJI Phantom + CamOne infinity + 5,8 GHz Transmitter Set and 7“ (178mm) Diversity Screen