MELSEC A Series

Programmable Logic Controller

User's Manual
(Hardware)

A1S63ADA
Analog input/output module

01 11 2001
IB(NA)-68474
Version D

• SAFETY PRECAUTIONS •

(Always read these instructions before using this equipment.)

When using this equipment, thoroughly read this manual and the associated manuals introduced in this manual. Also pay careful attention to safety and handle the equipment properly.
These precautions apply only to this equipment. Refer to the CPU module user's manual for a description of the PC system safety precautions.
These ●SAFETY PRECAUTIONS● classify the safety precautions into two categories: "DANGER" and "CAUTION".

⚠ DANGER	Procedures which may lead to a dangerous condition and cause death or serious injury, if not carried out properly.
⚠ CAUTION	Procedures which may lead to a dangerous condition and cause superficial to medium injury, or physical damage only, if not carried out properly.

Depending on circumstances, procedures indicated by ⚠ CAUTION may also be linked to serious results.

In any case, it is important to follow the directions for usage. Store this manual in a safe place so that you can take it out and read it whenever necessary. Always forward it to the end user.

[DESIGN PRECAUTIONS]

⚠ DANGER

- Configure a safety circuit on the outside of the PC so that the entire system works to a safe side even when the external power failure occurs or PC main unit fails.
  An erroneous output or operation may result in an accident.

⚠ CAUTION

- Use the PC in the environment given in the general specifications section of the applicable CPU module user's manual.
  Failure to do so may result in electric shock, fire, or erroneous operation or may damage or degrade the equipment.

- Do not bundle, or install, the control cables with, or near, the main circuit and power cables.
  Keep them at least 100 mm (3.9 inch) away from such cables.
  Noise may cause erroneous operation.

[INSTALLATION PRECAUTIONS]

⚠ CAUTION
• Insert the tabs at the bottom of the module into the holes in the base module before installing the module. Be sure to install the module in the base module with screws tightened to the specified torque. Improper installation may cause erroneous operation, accident, or the module to fall out. • Do not directly touch the module's conductive parts or electronic components. Doing so could cause malfunction or trouble in the module.

[WIRING PRECAUTIONS]

⚠ CAUTION
• If noise generates frequently, ground the AG and FG terminals using the PC dedicated class-D ground (class-three ground) or higher. Failure to do so may result in erroneous operation. • Confirm the rated voltage and terminal arrangement of the module before wiring it to the PC. If a power supply of different rating is connected or a wiring is performed erroneously, fire or accident may result. • Tighten the terminal screws to the specified torque. Loose terminal screws may cause a short circuit or erroneous operation. If excessively tightened, the terminal screws may be damaged, and cause a short circuit or erroneous operation. • Be sure that cuttings, wire chips, or other foreign matter do not enter the module. Foreign matter may start a fire or cause an accident or erroneous operation.

[STARTING AND MAINTENANCE PRECAUTIONS]

⚠ CAUTION
• Do not touch live terminals. It may cause erroneous operation. • Turn off the power before cleaning the module or retightening the screws. Doing this work while the power is on may damage the module or cause erroneous operation. • Do not disassemble or rebuild the module. It may cause accidents, erroneous operation, injury, or fire. • Turn off the power before mounting and dismounting the module. Mounting or dismounting the module while the power is on may damage the module or cause erroneous operation.

[OPERATING PRECAUTIONS]

⚠ CAUTION
• Do not output (ON) "Use Prohibited" signals from the PC CPU to the special module. Doing so could erroneously operate the PC system.

[DISPOSAL PRECAUTIONS]

⚠ CAUTION
• When disposing of this equipment, handle it as industrial waste.

REVISIONS

＊ The manual number is given on the bottom right of the front cover.

Print Date	＊ Manual Number	Revision
Oct.,1994	IB (NA)-68474-A	First edition
Feb.,1999	IB (NA)-68474-B	Addition Safety precautions Partial revisions Section 3.1
Dec.,1999	IB (NA)-68474-C	Partial revisions Chapter 2
Nov.,2001	IB (NA)-68474-D	Partial correction Contact address (Back cover)

CONTENTS

About the Manuals

The following manuals are related to this product.
Order them if necessary.

Detailed manuals

Manual Name	Manual No. (Model code)
Analog input/output module type A1S63ADA User's Manual.	IB-66435 (13JE30)

1. OVERVIEW

This manual describes specifications, handling and wiring of an A1S63ADA Analog input/output module (hereinafter referred to as the A1S63ADA).

2. PREFORMANCE SPECIFICATIONS

The performance specifications of the A1S63ADA are shown below.

Item		Specifications
A-D conversion	Analog input	Voltage:-10 to 0 to 10VDC(input resistance: 1MΩ) Current:-20 to 0 to 20mADC(input resistance: 250Ω)
	Digital output	-4096 to 4095 (when resolution is set to 1/4000) -8192 to 8191 (when resolution is set to 1/8000) -12288 to 12287 (when resolution is set to 1/12000)

I/O characteristics *1	Analog input	Digital value output 1/4000	1/8000	1/12000
	10V	4000	8000	12000
	5V or 20mA	2000	4000	6000
	0V or 4mA	0	0	0
	-5V or –20mA	-2000	-4000	-6000
	-10V	-4000	-8000	-12000
Max. resolution	Voltage Current	2.5mV 10μA	1.25mV 5μA	0.83mV 3.33μA
Conversion speed	———	1ms/ch	2ms/ch	3ms/ch
General accuracy*2	±1%	±40	±80	±120
Absolute max. input	Voltage: ±15V Current: ±30mA			
Analog input points	2 channel			

D-A conversion	———	Voltage output	Current output
	Digital input	-4000 to 4000 (when resolution is set to 1/4000) -8000 to 8000 (when resolution is set to 1/8000) -12000 to 12000 (when resolution is set to 1/12000)	0 to 4000 (when resolution is set to 1/4000) 0 to 8000 (when resolution is set to 1/8000) 0 to 12000 (when resolution is set to 1/12000)
	Analog output	-10 to 0 to 10VDC(external load resistance:2kΩ to 1MΩ)	0 to 20mADC(external load resistance:0Ω to 600Ω)

I/O characteristics *3	Voltage output 1/4000	1/8000	1/12000	Analog output value	Current output 1/4000	1/8000	1/12000	Analog output value
	4000	8000	12000	10V	4000	8000	12000	20mA
	2000	4000	6000	5V	2000	4000	6000	12mA
	0	0	0	0V	0	0	0	4mA
	-2000	-4000	-6000	-5V	—	—	—	—
	-4000	-8000	-12000	-10V	—	—	—	—

Max. reso-lution		Voltage output	Current output
	1/4000	2.5mV	5μA
	1/8000	1.25mV	2.5μA
	1/12000	0.83mV	1.7μA

Item		Specifications	
D-A conversion		Voltage output	Current output
	Conversion speed*4	1ms(1/4000) 2ms(1/8000) 3ms(1/12000)	
	General accuracy*5	±1%(±0.1V)	±1%(±0.2mA)
	Solute max. output	Voltage: ±12V Current: +28mA	
	Output shorting protection	Provided	
	Analog output points	1channel	
Common to A-D and D-A conversions	Insulation method	Across the I/O terminals and PC power supply ..... Photocoupler insulation Across channels .....Not insulated.	
Conversion speed in simple loop control*6		4ms(1/4000) 7ms(1/8000) 9ms(1/12000)	
Number of occupying I/O points		32 points	
Connection terminal block		20-point terminal block (M3.5 (7 screw)	
Applicable wire size		0.75 to1.5mm^2	
Applicable crimp terminal		1.25-3.5 1.25-YS3A 2-3.5 2-YS3A V1.25-M3 V1.25-YS3A V2-3.5 V2-YS3A	
Internal current consumption (5 VDC)		0.8A	
Weight		0.3kg	

The offset and gain are set as shown below as the default setting.

CH1 ... Offset: 0V/4mA, Gain: 5V/20mA
CH2 ... Offset: 0V/4mA, Gain: 5V/20mA
CH3 ... Offset: 0V/4mA, Gain: 10V/20mA

*1: For offset value: 0V/4mA, gain value: 5V/20mA
*2: This is the accuracy in respect to the maximum digital output value. The maximum digital output value is the maximum value at the selected resolution, and is the same for either a current input or voltage input.
*3: For offset value: 0V/4mA, gain value: 10V/20mA
*4: Depending on the timing of reading the digital value from the PLC CPU, the process may be carried out with a delay of up to one conversion processing time. The response time for the amplifier to output the D/A converted data to an external source is "maximum 1ms".
*5: This is the accuracy in respect to the maximum analog output value.
*6: The response time for the amplifier to output the D/A converted data to an external source is "1ms". For the general specifications, refer to the User's Manual for the PLC CPU in use.

POINT

For approx. 30 minutes after the power is turned ON, the A/D conversion value will fluctuate due to the effect of the self-generated heat.
If this fluctuation is a problem, start control after warming up for approx. 30 minutes.
In the same manner, wait approx. 30 minutes to warm up before adjusting the offset/gain value (user-set).

3. NAMES AND SETTINGS OF EACH PART

3.1 Names of each part

The names of each part are explained in this section.

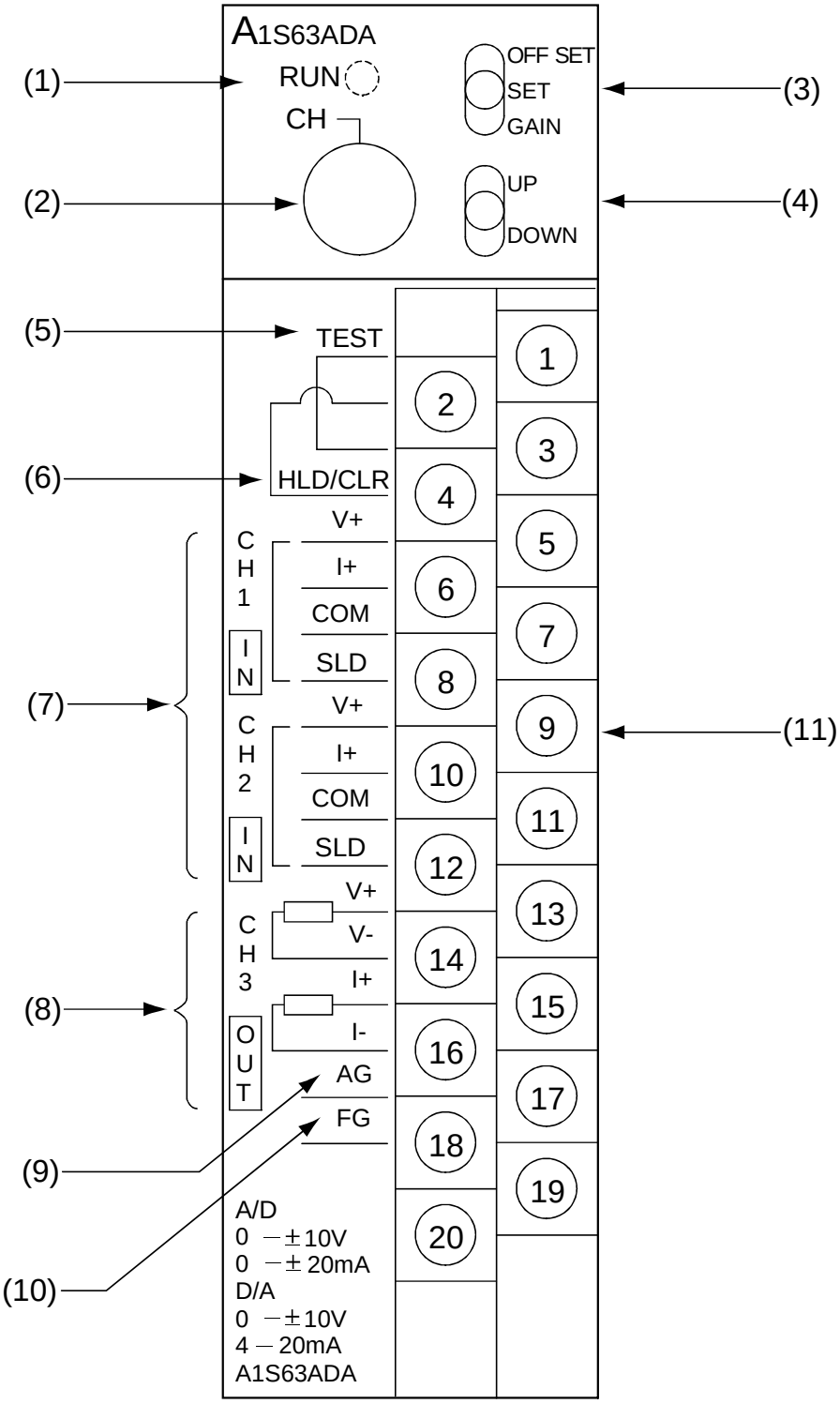

<table>
<tr><th>No.</th><th>Name</th><th>Details</th></tr>
<tr><td>(1)</td><td>RUN LED

RUN</td><td>This indicates the A1S63ADA operation state.
• Normal mode
LED ON: In normal operation
Flickering: Setting data error
LED OFF: 5V power OFF or watch dog timer error
• Test mode
Flickering: The LED flickers at a 0.25 second interval when the offset/gain select switch is set to "OFFSET" or "GAIN". If the CH3 setting value is set above the setting range with the UP/DOWN switch, the LED will flicker at a fast 0.1 second interval.
LED OFF: The offset/gain select switch is set to "SET".</td></tr>
<tr><td>(2)</td><td>Channel, resolution select switch

CH
0 1 2 3 4 5 6 7 8 9</td><td>This sets the channel for adjusting the offset/gain value and the resolution.
• Normal mode: Invalid
• Test mode : Valid
(Factly setting: 0)
<table>
<tr><th>Setting value</th><th>Offset/gain adjustment channel</th><th>Resolution</th></tr>
<tr><td>1</td><td>CH1</td><td rowspan="3">1/14000</td></tr>
<tr><td>2</td><td>CH2</td></tr>
<tr><td>3</td><td>CH3</td></tr>
<tr><td>4</td><td>CH4</td><td rowspan="3">1/8000</td></tr>
<tr><td>5</td><td>CH5</td></tr>
<tr><td>6</td><td>CH6</td></tr>
<tr><td>7</td><td>CH7</td><td rowspan="3">1/12000</td></tr>
<tr><td>8</td><td>CH8</td></tr>
<tr><td>9</td><td>CH9</td></tr>
</table></td></tr>
<tr><td>(3)</td><td>Offset/gain select switch

OFF SET
SET
GAIN</td><td>OFFSET position: The offset value is adjusted.
SET position : When moved from OFFSET to SET, the offset value is registered. When moned from GAIN to SET, the gain value is registered.
GAIN position : The gain value is adjusted.</td></tr>
</table>

<table>
<tr><th>No.</th><th>Name</th><th>Details</th></tr>
<tr><td>(4)</td><td>UP/DOWN switch
 
</td><td>This increments or decrements the CH3 offset value or gain value.
<table>
<tr><th>Time at UP/DOWN position</th><th>Increment/decrement width</th></tr>
<tr><td>Less than 1.5s</td><td>Voltage: approx. 2.5mV
Current: approx. 5μA</td></tr>
<tr><td>1.5s or more</td><td>Voltage: approx. 50mV
Current: approx. 5μA</td></tr>
</table></td></tr>
<tr><td>(5)</td><td>Test mode terminal
 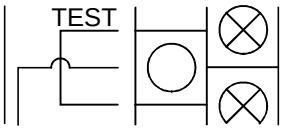
</td><td>This is used to adjust the offset/gain value and to set the resolution.
• Short-circuit across terminals 1 and 3 ... Test mode
• Open across terminals 1 and 3 ... Normal mode</td></tr>
<tr><td>(6)</td><td>Output hold/clear setting terminal
 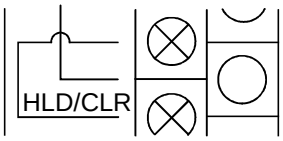
</td><td>This sets the CH3 analog output state when the PLC CPU is stopped.
Open across terminals 2 and 4: The offset value is output when the CPU is stopped (clear)
Short-circuit across terminals 2 and 4: The analog value is output when the CPU is stopped (hold)</td></tr>
<tr><td>(7)</td><td>Analog input terminal(CH1, CH2)
 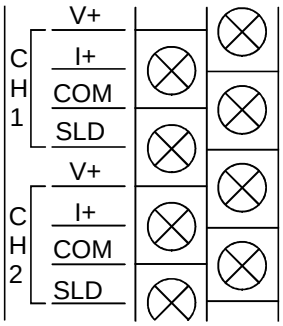
</td><td>The CH1 and CH2 analog values (voltage/current) are input.</td></tr>
<tr><td>(8)</td><td>Analog output terminal(CH3)
 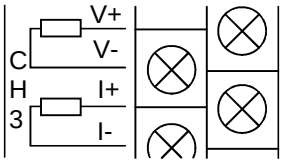
</td><td>The CH3 analog values (voltage/current) is output.</td></tr>
<tr><td>(9)</td><td>Analog ground terminal</td><td>This is the ground terminal for the analog signal.</td></tr>
<tr><td>(10)</td><td>Frame ground terminal</td><td>This is the module's ground terminal.</td></tr>
<tr><td>(11)</td><td>Terminal block</td><td>The numbers in the drawing indicate the terminal No.</td></tr>
</table>

3.2 Setting the offset and gain

Use the following procedure to change the input/output conversion characteristics.

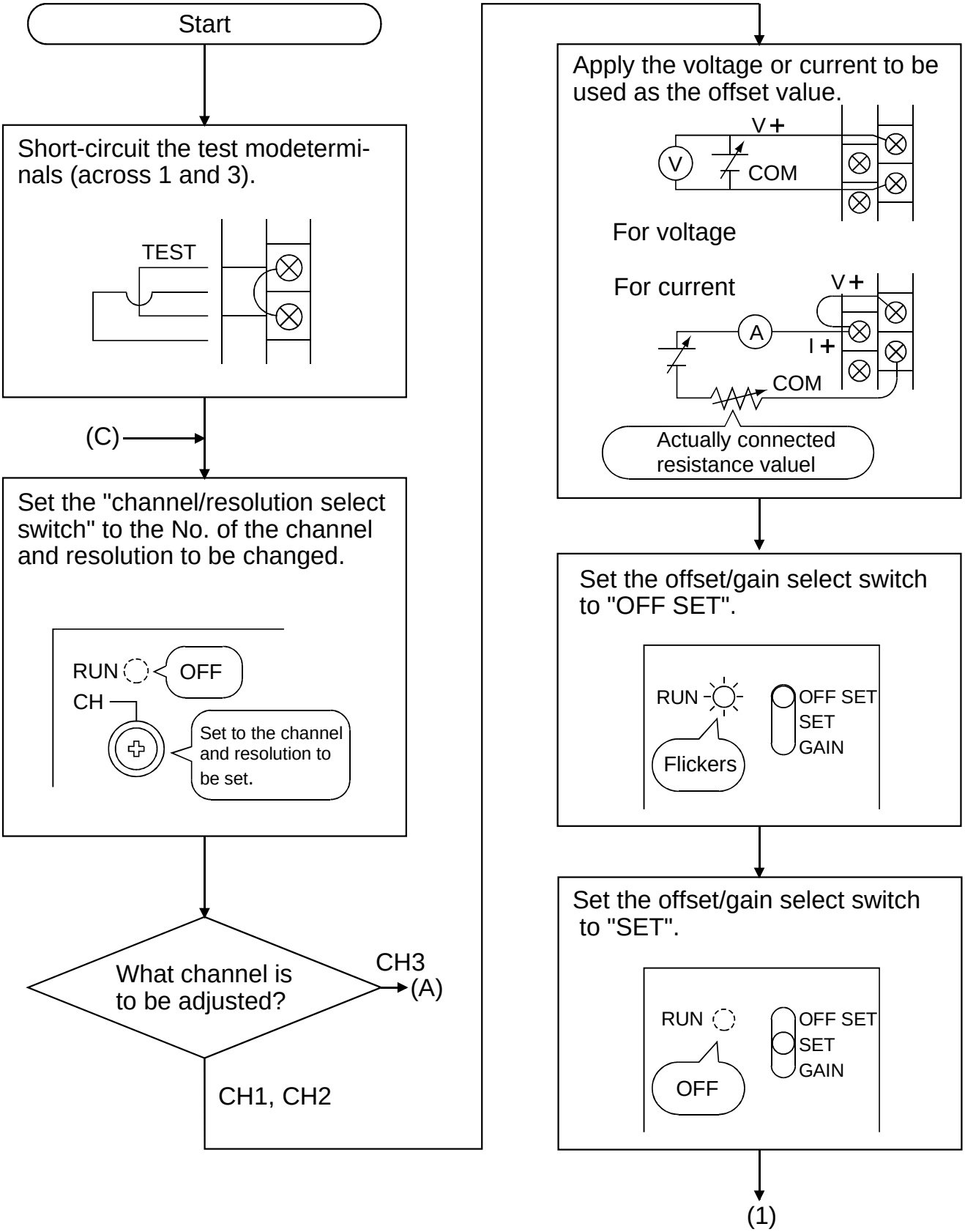

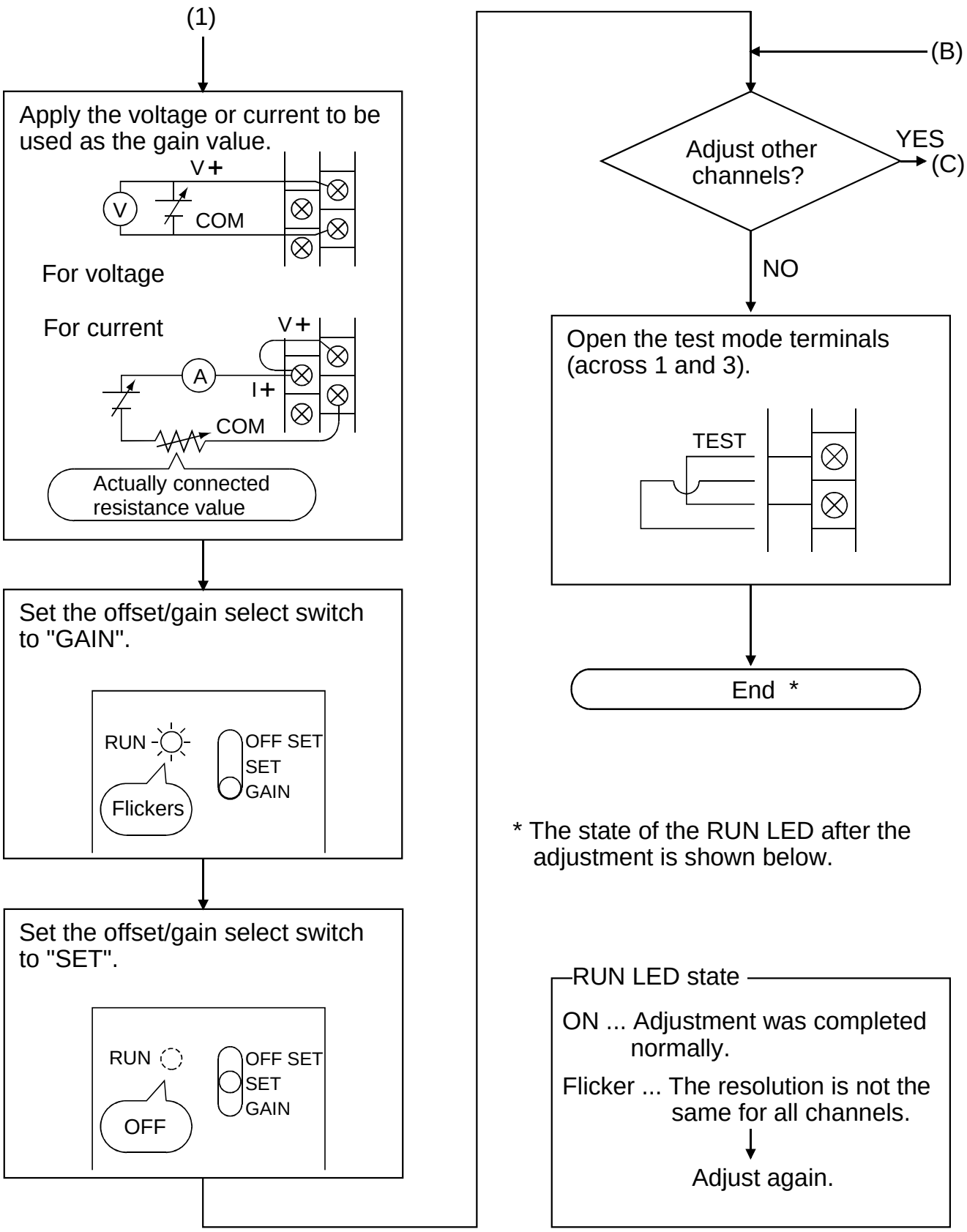
(1)
Apply the voltage or current to be used as the gain value.
V+
V
COM
For voltage
For current
V+
A
I+
COM
Actually connected resistance value
Set the offset/gain select switch to "GAIN".
RUN
Flickers
OFF SET
SET
GAIN
Set the offset/gain select switch to "SET".
RUN
OFF
OFF SET
SET
GAIN
(B)
Adjust other channels?
YES
(C)
NO
Open the test mode terminals (across 1 and 3).
TEST
End *
* The state of the RUN LED after the adjustment is shown below.
RUN LED state
ON ... Adjustment was completed normally.
Flicker ... The resolution is not the same for all channels.
Adjust again.

(A)

Set the offset/gain select switch to "OFF SET".

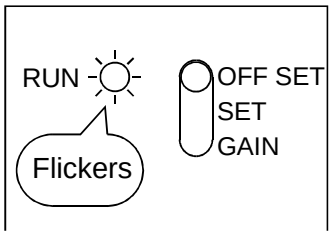

Using the "UP/DOWN switch", set the voltage or current to be used as the offset value.

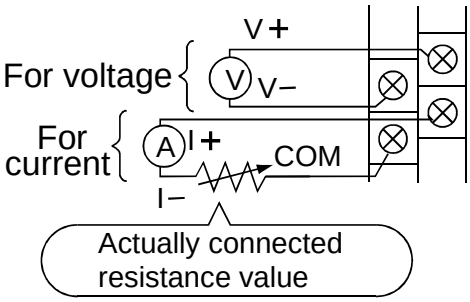

Set the offset/gain select switch to "SET".

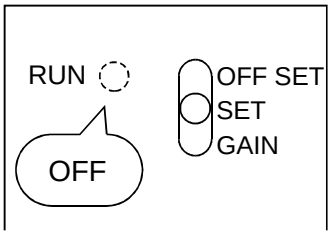

(2)

(2)

Set the offset/gain select switch to "GAIN"

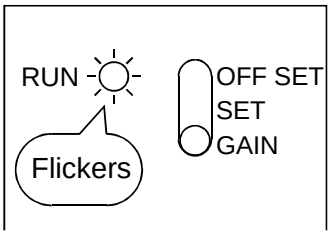

Using the "UP/DOWN switch", set the voltage or current to be used as the gain value.

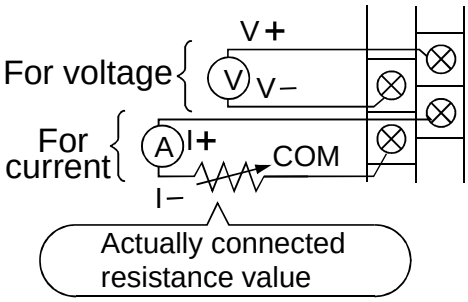

Set the offset/gain select switch to "SET".

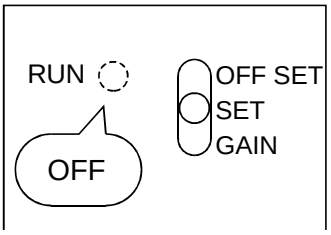

(B)

Remark

The offset value and gain values are set as follows.

(1) A/D conversion section
  (a) The offset value is the analog input value (voltage or current) at which the digital output value is "0".
  (b) The gain value is the analog input value (voltage or current) at which the digital output value is one of the following.
    1. 2000 (resolution 1/4000)
    2. 4000 (resolution 1/8000)
    3. 6000 (resolution 1/12000)
(2) D/A conversion section
  (a) The offset value is the analog value (voltage or current) output from the A1S63ADA when the digital value is "0".
  (b) The gain value is the analog value (voltage or current) output from the A1S63ADA when the digital value is one of the following.
    1. 4000 (resolution 1/4000)
    2. 8000 (resolution 1/8000)
    3. 12000 (resolution 1/12000)

4. HANDLING

4.1 Precautions for handling

(1) As the body case and terminal block are made of resin, do not drop these or apply strong impacts.
(2) Do not remove the module's PCB from the case. Failure to observe this could lead to faults.
(3) Make sure that foreign matter such as wire scraps do not enter the module from the top while wiring. If any foreign matter enters, remove it.
(4) Tighten the module tightening screws and terminal screws, etc., within the following range.

Screw position	Tightening torque range
Module tightening screw (M4 screw)	78 to 118N • cm
Terminal block terminal screw (M3.5 screw)	59 to 88N • cm
Terminal block installation screw (M4 screw)	78 to 118N • cm

MEMO

5. WIRING

The precautions for wiring and examples of connecting the module are given in this section.

5.1 Precautions for wiring

One condition for creating a highly reliable system and using the A1S63ADA functions to the fullest is to carry out wiring that is not easily "affected by noise".

Precautions for wiring are given below.

(1) Use separate cables for the alternating current and A1S63ADA analog input, and make sure that the alternating current side is not affected by surge or induction.
(2) Do not wire near or with the main circuit wires, high-voltage wires or load wire other than from the PLC. If laid close together, the wires will be affected by noise, surge and induction.
(3) Ground the shield wire or the shield of the shield cable at one point on the PLC side.
Note that depending on the state of noise from the external source, these should be grounded on the external side.

5.2 Example of module connection

The method for wiring the A1S63ADA is shown below.

(1) CH1 and CH2

(a) For voltage input

Signal source 0 to ±10V

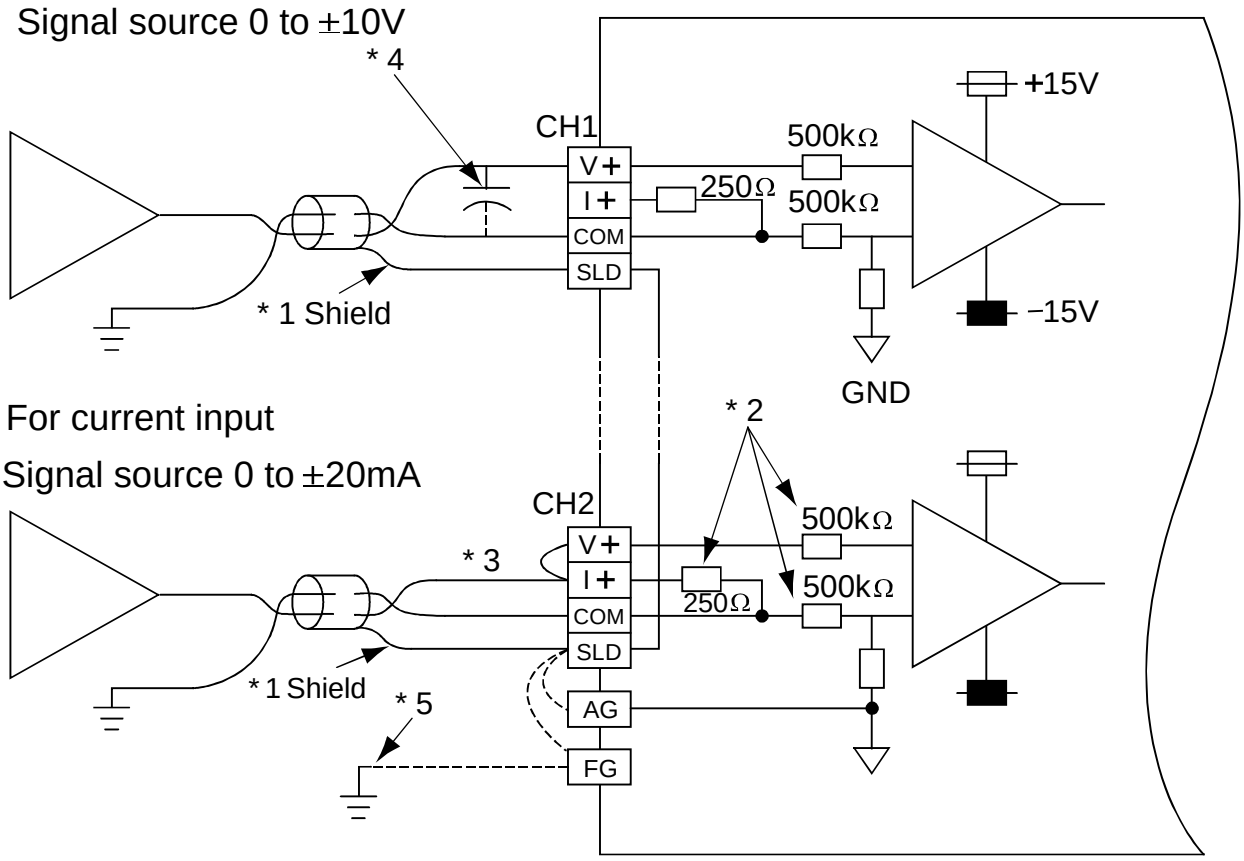

(b) For current input

Signal source 0 to ±20mA

*1: Use a 2-core twisted shield wire for the wire.
*2: This indicates the A1S63ADA input resistance.
*3: When inputting the current, always connect the (V+) and (I+) terminals.
*4: If noise or ripple is generated in the external wire, connect an approx. 0.1 to 0.47μF25WV capacitor between terminal V and COM.
*5: If there are high levels of noise, always ground. There may be cases where the power supply unit FG or main module FG should also be grounded.
If the grounding wire is changed (connected or disconnected) after setting the offset value and gain value, set the offset value and gain value again.

(2) CH3

(a) For voltage output

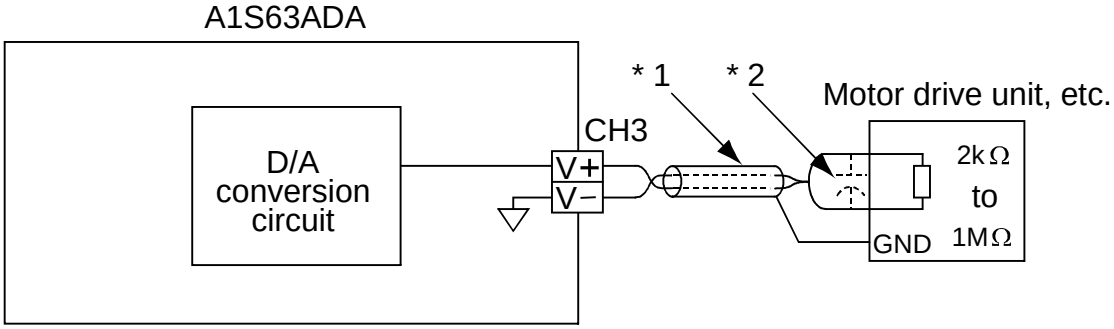

(b) For current output

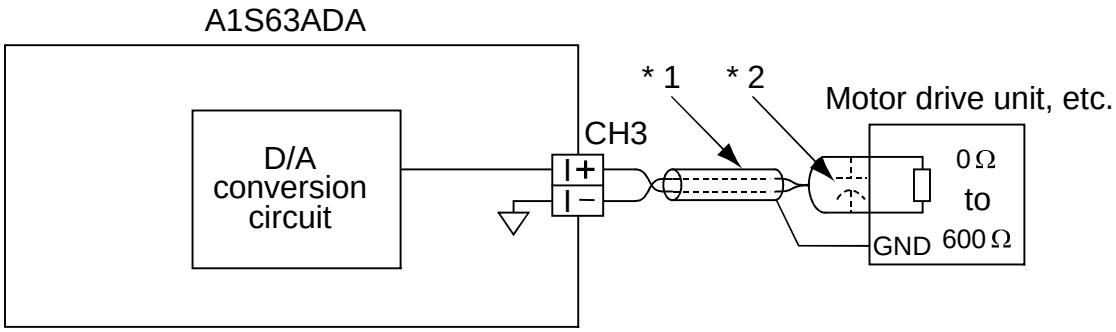

*1: Use a 2-core twisted shield wire for the wire.
*2: If noise or ripple is generated in the external wire, connect an approx. 0.1 to 0.47μFWV capacitor to the external device's input terminal.

IMPORTANT
The voltage and current output of the same channel cannot be used simultaneously. The internal element will be damaged if used together, so always open the terminals that are not in use.

6. EXTERNAL DIMENSIONS DIAGRAM

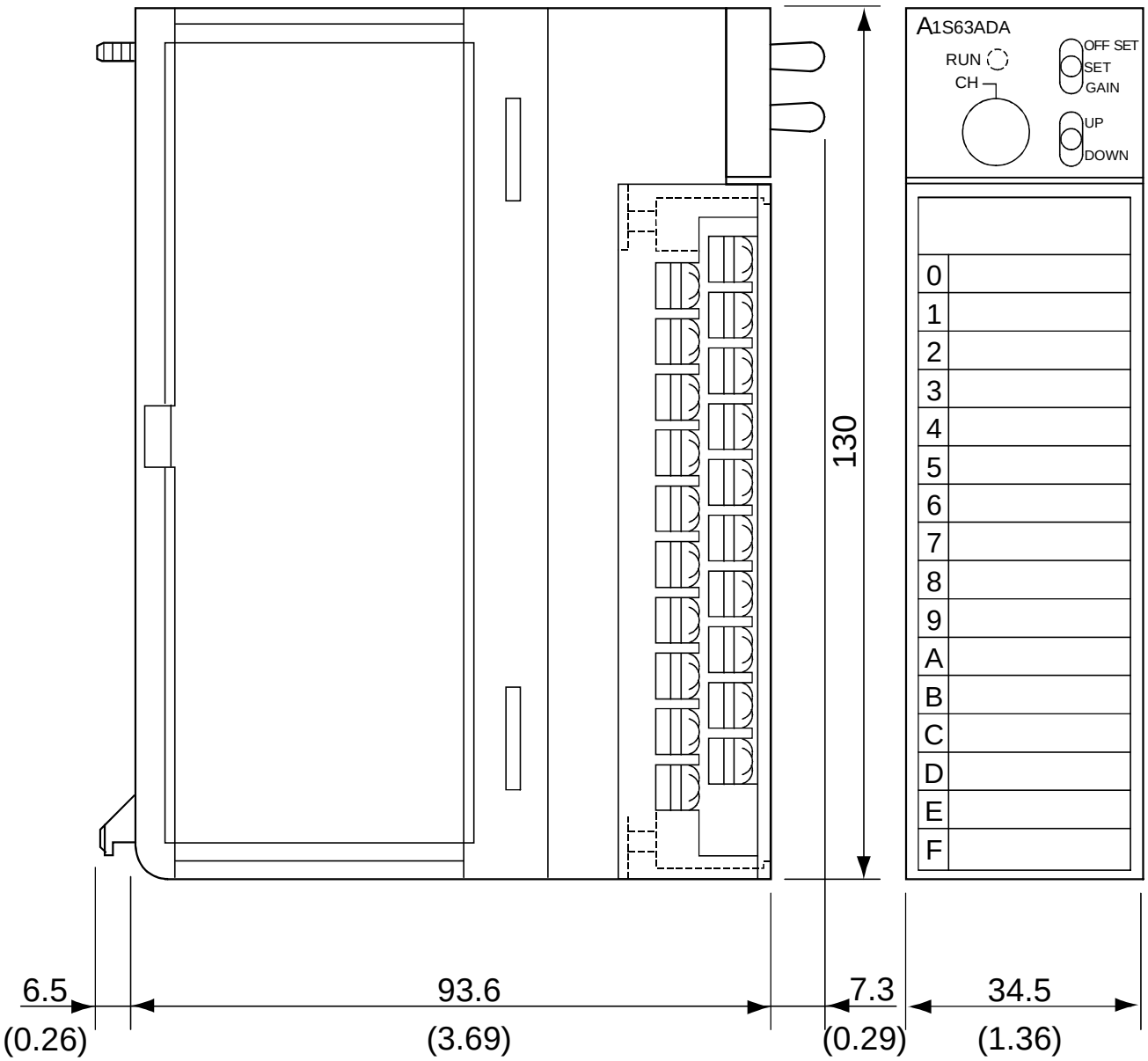

Unit: mm(inch)

MEMO

Warranty

Mitsubishi will not be held liable for damage caused by factors found not to be the cause of Mitsubishi; machine damage or lost profits caused by faults in the Mitsubishi products; damage, secondary damage, accident compensation caused by special factors unpredictable by Mitsubishi; damages to products other than Mitsubishi products; and to other duties.

⚠For safe use

- This product has been manufactured as a general-purpose part for general industries, and has not been designed or manufactured to be incorporated in a device or system used in purposes related to human life.
- Before using the product for special purposes such as nuclear power, electric power, aerospace, medicine or passenger movement vehicles, consult with Mitsubishi.
- This product has been manufactured under strict quality control. However, when installing the product where major accidents or losses could occur if the product fails, install appropriate backup or failsafe functions in the system.

Country/Region	Sales office/Tel
U.S.A	Mitsubishi Electric Automation Inc. 500 Corporate Woods Parkway Vernon Hills, IL 60061 Tel : +1-847-478-2100
Brazil	MELCO-TEC Rep. Com.e Assessoria Tecnica Ltda. Av. Rio Branco, 123-15 ,and S/1507, Rio de Janeiro, RJ CEP 20040-005, Brazil Tel : +55-21-221-8343
Germany	Mitsubishi Electric Europe B.V. German Branch Gothaer Strasse 8 D-40880 Ratingen, GERMANY Tel : +49-2102-486-0
U.K	Mitsubishi Electric Europe B.V. UK Branch Travellers Lane, Hatfield, Herts., AL10 8XB,UK Tel : +44-1707-276100
Italy	Mitsubishi Electric Europe B.V. Italian Branch Centro Dir. Colleoni, Pal. Perseo - Ingr.2 Via Paracelso 12, 20041 Agrate B., Milano, Italy Tel:+39-039-60531
Spain	Mitsubishi Electric Europe B.V. Spanish Branch Carretera de Rubi 76-80 08190 - Sant Cugat del Valles, Barcelona, Spain Tel:+34-935-653135
South Africa	Circuit Breaker Industries LTD. Private Bag 2016, Isando 1600, Johannesburg, South Africa Tel : +27-11-928-2000
Hong Kong	Ryoden Automation Ltd. 10th Floor, Manulife Tower, 169 Electric Road, North Point, HongKong Tel : +852-2887-8870

Country/Region	Sales office/Tel
China	Ryoden International Shanghai Ltd. 3F Block5 Building Automation Instrumentation Plaza 103 Cao Bao Rd. Shanghai 200233 China Tel : +86-21-6475-3228
Taiwan	Setsuyo Enterprise Co., Ltd. 6F., No.105 Wu-Kung 3rd.RD, Wu-Ku Hsiang, Taipei Hsine, Taiwan Tel : +886-2-2299-2499
Korea	HAN NEUNG TECHNO CO.,LTD. 1F Dong Seo Game Channel Bldg., 660-11, Deungchon-dong Kangsec-ku, Seoul, Korea Tel : +82-2-3668-6567
Singapore	Mitsubishi Electric Asia Pte, Ltd. 307 ALEXANDRA ROAD #05-01/02, MITSUBISHI ELECTRIC BUILDING SINGAPORE 159943 Tel : +65-473-2480
Thailand	F. A. Tech Co.,Ltd. 898/28,29,30 S.V.City Building,Office Tower 2,Floor 17-18 Rama 3 Road, Bangkpongpang, Yannawa, Bangkok 10120 Tel : +66-2-682-6522
Indonesia	P.T. Autoteknindo SUMBER MAKMUR Jl. Muara Karang Selatan Block A Utara No.1 Kav. No.11 Kawasan Industri/ Pergudangan Jakarta - Utara 14440 Tel : +62-21-663-0833
India	Messung Systems Put,Ltd. Electronic Sadan NO:111 Unit No15, M.I.D.C BHOSARI,PUNE-411026 Tel : +91-20-7128927
Australia	Mitsubishi Electric Australia Pty. Ltd. 348 Victoria Road, PostalBag, No 2, Rydalmere, N.S.W 2116, Australia Tel : +61-2-9684-7777

MITSUBISHI ELECTRIC CORPORATION

HEAD OFFICE : 1-8-12, OFFICE TOWER Z 14F HARUMI CHUO-KU 104-6212, JAPAN
NAGOYA WORKS : 1-14, YADA-MINAMI5, HIGASHI-KU, NAGOYA, JAPAN

When exported from Japan, this manual does not require application to the Ministry of Economy, Trade and Industry for service transaction permission.

Specifications subject to change without notice.
Printed in Japan on recycled paper.

MITSUBISHI ELECTRIC

HEADQUARTERS

MITSUBISHI ELECTRIC EUROPE B.V. **EUROPE**
German Branch
Gothaer Straße 8
D-40880 Ratingen
Phone: +49 (0)2102 / 486-0
Fax: +49 (0)2102 / 486-1120

MITSUBISHI ELECTRIC EUROPE B.V.-org.sl. **CZECH REP.**
Czech Branch
Avenir Business Park, Radlická 714/113a
CZ-158 00 Praha 5
Phone: +420 - 251 551 470
Fax: +420 - 251-551-471

MITSUBISHI ELECTRIC EUROPE B.V. **FRANCE**
French Branch
25, Boulevard des Bouvets
F-92741 Nanterre Cedex
Phone: +33 (0)1 / 55 68 55 68
Fax: +33 (0)1 / 55 68 57 57

MITSUBISHI ELECTRIC EUROPE B.V. **IRELAND**
Irish Branch
Westgate Business Park, Ballymount
IRL-Dublin 24
Phone: +353 (0)1 4198800
Fax: +353 (0)1 4198890

MITSUBISHI ELECTRIC EUROPE B.V. **ITALY**
Italian Branch
Viale Colleoni 7
I-20041 Agrate Brianza (MB)
Phone: +39 039 / 60 53 1
Fax: +39 039 / 60 53 312

MITSUBISHI ELECTRIC EUROPE B.V. **POLAND**
Poland Branch
Krakowska 50
PL-32-083 Balice
Phone: +48 (0)12 / 630 47 00
Fax: +48 (0)12 / 630 47 01

MITSUBISHI ELECTRIC EUROPE B.V. **RUSSIA**
52, bld. 3 Kosmodamianskaya nab 8 floor
RU-115054 Moscow
Phone: +7 495 721-2070
Fax: +7 495 721-2071

MITSUBISHI ELECTRIC EUROPE B.V. **SPAIN**
Spanish Branch
Carretera de Rubí 76-80
E-08190 Sant Cugat del Vallés (Barcelona)
Phone: 902 131121 // +34 935653131
Fax: +34 935891579

MITSUBISHI ELECTRIC EUROPE B.V. **UK**
UK Branch
Travellers Lane
UK-Hatfield, Herts. AL10 8XB
Phone: +44 (0)1707 / 27 61 00
Fax: +44 (0)1707 / 27 86 95

MITSUBISHI ELECTRIC CORPORATION **JAPAN**
Office Tower "Z" 14 F
8-12,1 chome, Harumi Chuo-Ku
Tokyo 104-6212
Phone: +81 3 622 160 60
Fax: +81 3 622 160 75

MITSUBISHI ELECTRIC AUTOMATION, Inc. **USA**
500 Corporate Woods Parkway
Vernon Hills, IL 60061
Phone: +1 847 478 21 00
Fax: +1 847 478 22 53

EUROPEAN REPRESENTATIVES

GEVA **AUSTRIA**
Wiener Straße 89
AT-2500 Baden
Phone: +43 (0)2252 / 85 55 20
Fax: +43 (0)2252 / 488 60

TEHNIKON **BELARUS**
Oktyabrskaya 16/5, Off. 703-711
BY-220030 Minsk
Phone: +375 (0)17 / 210 46 26
Fax: +375 (0)17 / 210 46 26

ESCO DRIVES & AUTOMATION **BELGIUM**
Culliganlaan 3
BE-1831 Diegem
Phone: +32 (0)2 / 717 64 30
Fax: +32 (0)2 / 717 64 31

Koning & Hartman b.v. **BELGIUM**
Woluwelaan 31
BE-1800 Vilvoorde
Phone: +32 (0)2 / 257 02 40
Fax: +32 (0)2 / 257 02 49

INEA BH d.o.o. **BOSNIA AND HERZEGOVINA**
Aleja Lipa 56
BA-71000 Sarajevo
Phone: +387 (0)33 / 921 164
Fax: +387 (0)33/ 524 539

AKHNATON **BULGARIA**
4 Andrej Ljapchev Blvd. Pb 21
BG-1756 Sofia
Phone: +359 (0)2 / 817 6044
Fax: +359 (0)2 / 97 44 06 1

INEA CR d.o.o. **CROATIA**
Losinjska 4 a
HR-10000 Zagreb
Phone: +385 (0)1 / 36 940 - 01/ -02/ -03
Fax: +385 (0)1 / 36 940 - 03

AutoCont C.S. s.r.o. **CZECH REPUBLIC**
Technologická 374/6
CZ-708 00 Ostrava-Pustkovec
Phone: +420 595 691 150
Fax: +420 595 691 199

Beijer Electronics A/S **DENMARK**
Lykkegårdsvej 17
DK-4000 Roskilde
Phone: +45 (0)46/ 75 76 66
Fax: +45 (0)46 / 75 56 26

Beijer Electronics Eesti OÜ **ESTONIA**
Pärnu mnt.160i
EE-11317 Tallinn
Phone: +372 (0)6 / 51 81 40
Fax: +372 (0)6 / 51 81 49

Beijer Electronics OY **FINLAND**
Peltoie 37
FIN-28400 Ulvila
Phone: +358 (0)207 / 463 540
Fax: +358 (0)207 / 463 541

UTECO **GREECE**
5, Mavrogenous Str.
GR-18542 Piraeus
Phone: +30 211 / 1206 900
Fax: +30 211 / 1206 999

MELTRADE Kft. **HUNGARY**
Fertő utca 14.
HU-1107 Budapest
Phone: +36 (0)1 / 431-9726
Fax: +36 (0)1 / 431-9727

Beijer Electronics SIA **LATVIA**
Ritausmas iela 23
LV-1058 Riga
Phone: +371 (0)784 / 2280
Fax: +371 (0)784 / 2281

Beijer Electronics UAB **LITHUANIA**
Savanoriu Pr. 187
LT-02300 Vilnius
Phone: +370 (0)5 / 232 3101
Fax: +370 (0)5 / 232 2980

EUROPEAN REPRESENTATIVES

ALFATRADE Ltd. **MALTA**
99, Paola Hill
Malta- Paola PLA 1702
Phone: +356 (0)21 / 697 816
Fax: +356 (0)21 / 697 817

INTEHSIS srl **MOLDOVA**
bld. Traian 23/1
MD-2060 Kishinev
Phone: +373 (0)22 / 66 4242
Fax: +373 (0)22 / 66 4280

HIFLEX AUTOM.TECHNIEK B.V. **NETHERLANDS**
Wolweverstraat 22
NL-2984 CD Ridderkerk
Phone: +31 (0)180 – 46 60 04
Fax: +31 (0)180 – 44 23 55

Koning & Hartman b.v. **NETHERLANDS**
Haarlerbergweg 21-23
NL-1101 CH Amsterdam
Phone: +31 (0)20 / 587 76 00
Fax: +31 (0)20 / 587 76 05

Beijer Electronics AS **NORWAY**
Postboks 487
NO-3002 Drammen
Phone: +47 (0)32 / 24 30 00
Fax: +47 (0)32 / 84 85 77

Fonseca S.A. **PORTUGAL**
R. João Francisco do Casal 87/89
PT - 3801-997 Aveiro, Esgueira
Phone: +351 (0)234 / 303 900
Fax: +351 (0)234 / 303 910

Sirius Trading & Services srl **ROMANIA**
Aleea Lacul Morii Nr. 3
RO-060841 Bucuresti, Sector 6
Phone: +40 (0)21 / 430 40 06
Fax: +40 (0)21 / 430 40 02

Craft Con. & Engineering d.o.o. **SERBIA**
Bulevar Svetog Cara Konstantina 80-86
SER-18106 Nis
Phone: +381 (0)18 / 292-24-4/5
Fax: +381 (0)18 / 292-24-4/5

INEA SR d.o.o. **SERBIA**
Izletnicka 10
SER-113000 Smederevo
Phone: +381 (0)26 / 617 163
Fax: +381 (0)26 / 617 163

SIMAP s.r.o. **SLOVAKIA**
Jána Derku 1671
SK-911 01 Trenčín
Phone: +421 (0)32 743 04 72
Fax: +421 (0)32 743 75 20

PROCONT, spol. s r.o. Prešov **SLOVAKIA**
Kúpelná 1/A
SK-080 01 Prešov
Phone: +421 (0)51 7580 611
Fax: +421 (0)51 7580 650

INEA d.o.o. **SLOVENIA**
Stegne 11
SI-1000 Ljubljana
Phone: +386 (0)1 / 513 8100
Fax: +386 (0)1 / 513 8170

Beijer Electronics AB **SWEDEN**
Box 426
SE-20124 Malmö
Phone: +46 (0)40 / 35 86 00
Fax: +46 (0)40 / 93 23 01

Omni Ray AG **SWITZERLAND**
Im Schörli 5
CH-8600 Dübendorf
Phone: +41 (0)44 / 802 28 80
Fax: +41 (0)44 / 802 28 28

GTS **TURKEY**
Bayraktar Bulvari Nutuk Sok. No:5
TR-34775 Yukarı Dudullu-Ümraniye-İSTANBUL
Phone: +90 (0)216 526 39 90
Fax: +90 (0)216 526 3995

CSC Automation Ltd. **UKRAINE**
4-B, M. Raskovoyi St.
UA-02660 Kiev
Phone: +380 (0)44 / 494 33 55
Fax: +380 (0)44 / 494-33-66

EURASIAN REPRESENTATIVES

Kazpromautomatics Ltd. **KAZAKHSTAN**
Mustafina Str. 7/2
KAZ-470046 Karaganda
Phone: +7 7212 / 50 11 50
Fax: +7 7212 / 50 11 50

MIDDLE EAST REPRESENTATIVES

ILAN & GAVISH Ltd. **ISRAEL**
24 Shenkar St., Kiryat Arie
IL-49001 Petah-Tiqva
Phone: +972 (0)3 / 922 18 24
Fax: +972 (0)3 / 924 0761

TEXEL ELECTRONICS Ltd. **ISRAEL**
2 Ha´umanut, P.O.B. 6272
IL-42160 Netanya
Phone: +972 (0)9 / 863 39 80
Fax: +972 (0)9 / 885 24 30

CEG INTERNATIONAL **LEBANON**
Cebaco Center/Block A Autostrade DORA
Lebanon - Beirut
Phone: +961 (0)1 / 240 430
Fax: +961 (0)1 / 240 438

AFRICAN REPRESENTATIVE

CBI Ltd. **SOUTH AFRICA**
Private Bag 2016
ZA-1600 Isando
Phone: + 27 (0)11 / 977 0770
Fax: + 27 (0)11 / 977 0761