7100S

Single phase solid state contactors

invensys
EUROTHERM

ENG

CE

• DATA MANAGEMENT • CONTROLS • PROCESS AUTOMATION•

User Manual

7100S
SMART CONTROLLERS

SINGLE-PHASE INDUSTRIAL SOLID STATE CONTACTORS

7000 series

User Manual

CONTENTS

PURPOSE OF MANUAL

This manual (Issue 2.0) describes the Basic Version and all options for 7100S series solid state contactors with current ratings of up to 250 A.

General information about the digital communication option is presented in the technical specifications (section 1).
The operation of 7100S units with this option and the operation of the digital communication are described in the ‘7000 Series. Digital Communication’ manual (part number HA176664ENG available later).

EUROPEAN DIRECTIVES AND APPLICABLE STANDARDS

COMPLIANCE WITH PRODUCT STANDARD

7100S products comply with the terms of product standard **EN 60947-4-3 'Contactors and motor-starters - AC semiconductor controllers and contactors for non-motor loads'. The number of this standard is indicated on the front panel label.**

CE LABELLING

7100S products, installed and used in accordance with their user manual, bear CE labelling to indicate compliance with the essential requirements of:

- the **European Low Voltage Directive** 73/23 EEC dated 19 February 1973 amended by 93/68 EEC dated 22 July 1993
- the **Electromagnetic Compatibility Directive** 89/336/EEC dated 3 March 1969 amended by 92/31/EEC dated 28 April 1992 and 93/68/EEC dated 22 July 1993.

SAFETY

The units have IP20 protection rating as defined by standard IEC 60529.
External wiring must comply with standards IEC 60364-4-43 and IEC 60943.
Copper cables and conductors rated to a temperature of 75°C (167°F) must be used.

ELECTROMAGNETIC COMPATIBILITY (EMC) TEST STANDARDS

7100S products installed and used in accordance with the user manual, are designed for an industrial environment and must not be used in the home.

IMMUNITY

The EMC immunity test standards required by product standard EN 60947-4-3 are given in table 1.

Test type	Minimum levels	EMC test standard
Electrostatic discharge	4 kV on contact; 8 kV in air	EN 61000-4-2
Radiated, radio frequency electromagnetic field	10 V/m 80 MHz $\leq f \leq$ 1 GHz; 80% modulation 1 kHz sinusoidal	EN 61000-4-3
Electrical fast transient / burst	2 kV / 5 kHz	EN 61000-4-4
Electrical surge	4 kV line to earth; 2 kV line to line	EN 61000-4-5
Conducted disturbances	140 dBµV; 150 kHz $\leq f \leq$ 80 MHz	EN 61000-4-6
Voltage dips, short interruptions and voltage variation	5 s interruptions	EN 61000-4-11

Table 1 EMC immunity standards compliance

EMISSIONS

The EMC emissions test standards required by product standard EN 60947-4-3 are given in table 2.

Emission type	Firing mode	EMC test standard
Radiated, radio frequency	All firing modes	CISPR 11 Class A
Conducted, radio frequency	'Burst mode' and 'Single-cycle'	CISPR 11 Class A Group 2
	'Phase angle' (Product compliant if external series filter fitted)	

Table 2 EMC emissions standards compliance

EMC FILTER (conducted emissions)

For facilities required to comply with the levels stipulated under the generic standard for conducted emissions, EN 61000-6-4, Eurotherm Automation can provide optional internal filters (code FILT) on units up to 100 A.

EMC GUIDE

To help you deal with installation-dependent electromagnetic interference effects, Eurotherm provides an 'Electromagnetic compatibility' installation guide (ref. HA025464) which sets out best current practice regarding EMC.

DECLARATION OF CONFORMITY

A CE declaration of conformity is available on request.

COMMISSIONING FLOWCHART

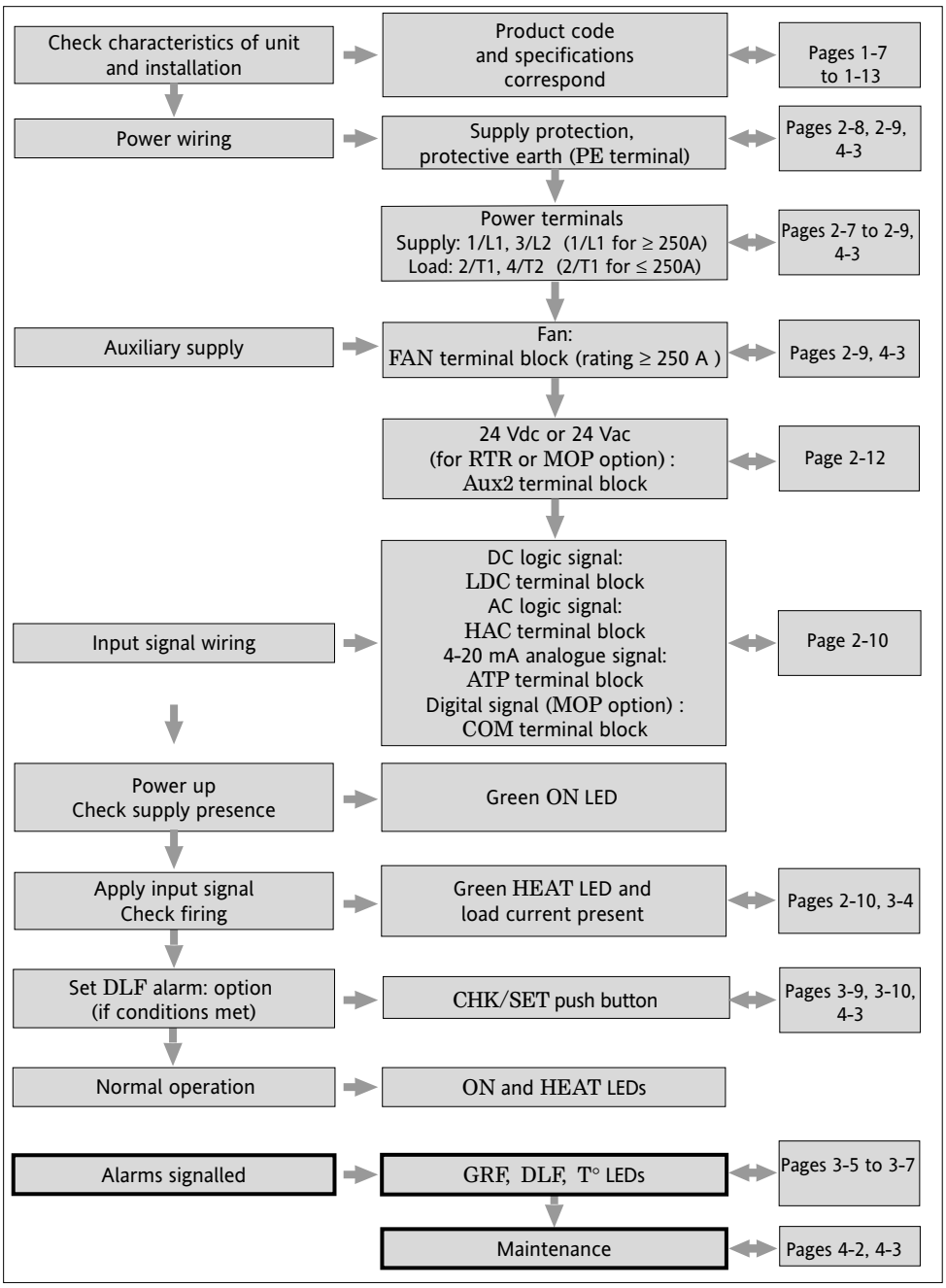

Chapter 1

SOLID STATE CONTACTOR IDENTIFICATION

Contents Page

Chapter 1 IDENTIFICATION

GENERAL PRESENTATION

7100S series solid state contactors are used to control the **electrical power** of single phase industrial loads. The load controlled may comprise **low** temperature coefficient resistive loads or short wave infrared (**SWIR**) elements.

Current ratings vary from **16 A** to **630 A** (see coding), at voltages of **100 V** to **690 V**.
7100S series power thyristor units (rating of up to 100 A) comprise two channels, one **controlled by thyristors** and one **direct internal** channel.
7100S units rated 125 A and above only comprise a **single controlled channel**.

BASIC VERSION (without options)

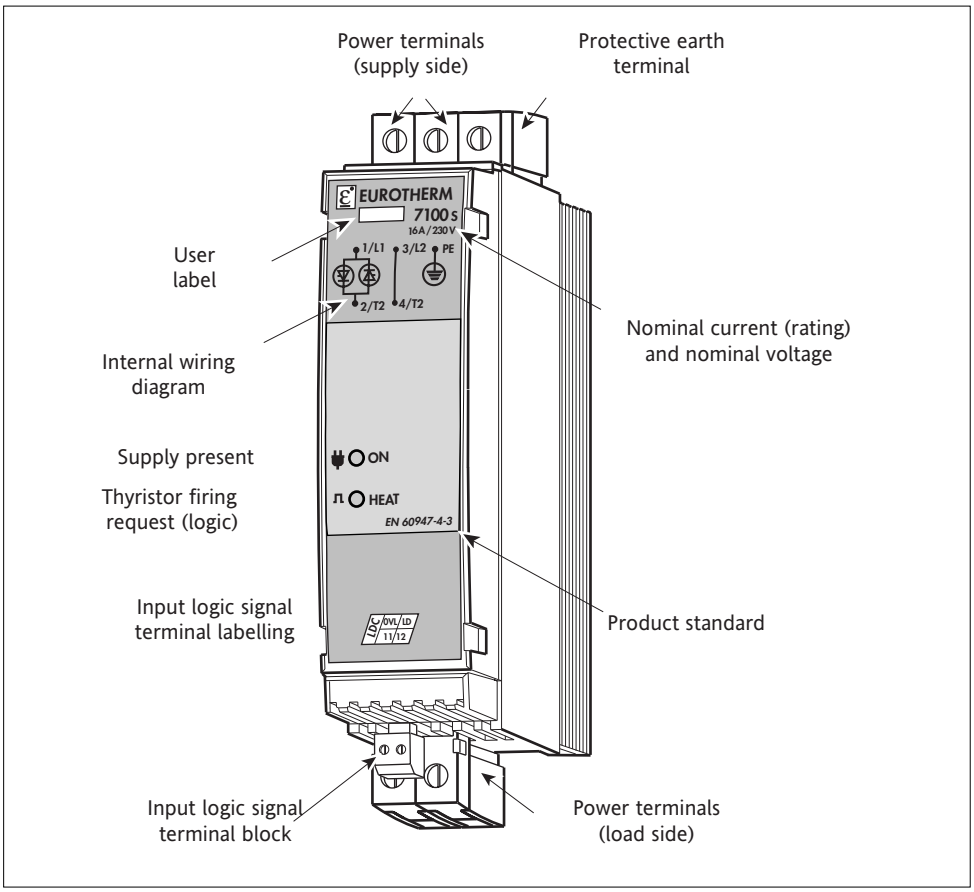

Figure 1-1 General view of 7100S, Basic version (here with DC logic input, 16 A rating)

VERSIONS WITH OPTIONS

The figures below show general views of 7100S units (100 and 250 A versions) with Alarms, Retransmission or Communication options and with various input types.
The diagrams indicate the power and command terminals, terminal block labels, indicators and settings push button.

Options (alarms)

Figure 1-2 shows a general view of the 7100S with GRF (serious alarms) and DLF (Diagnostic Load Failure alarm) options.

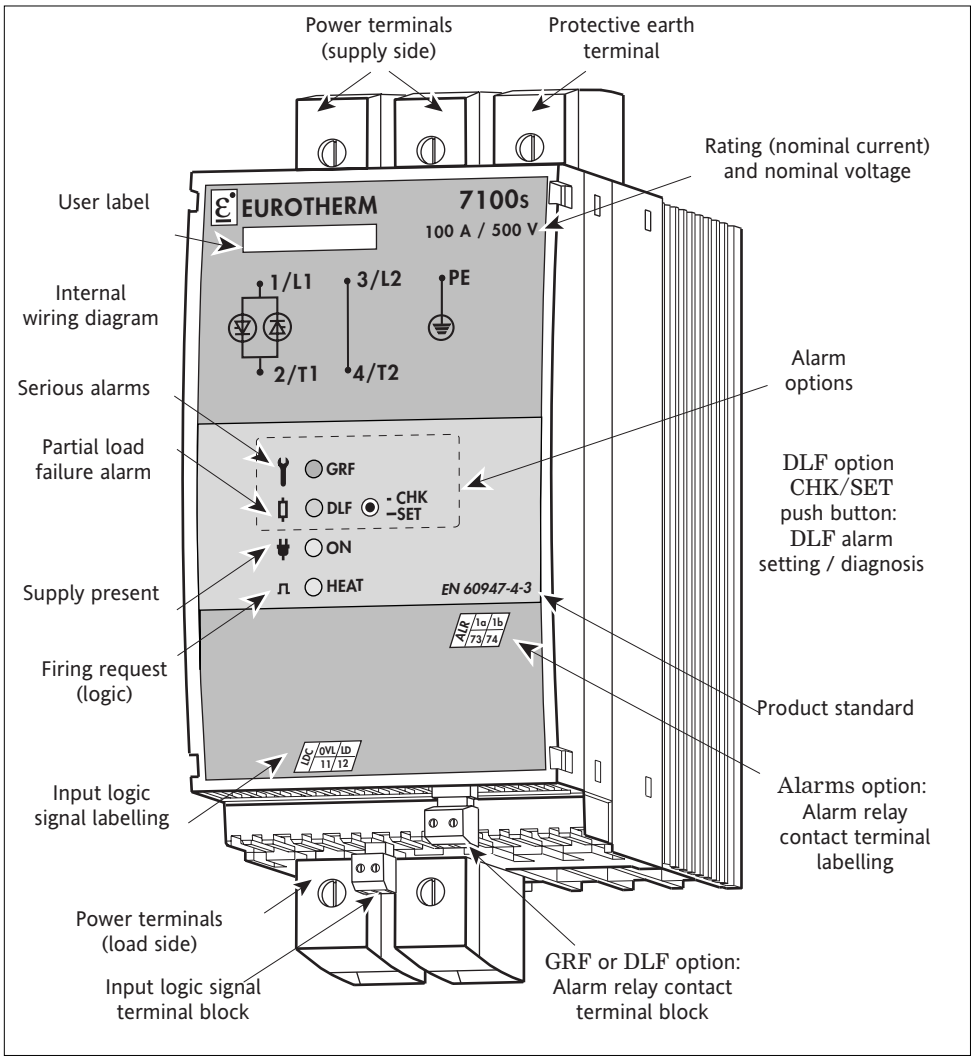

Figure 1-2 General view of 7100S with DLF option (here with 100 A rating and DC logic input)

Figure 1-3 shows a general view of a fan-cooled 7100S unit with alarms.

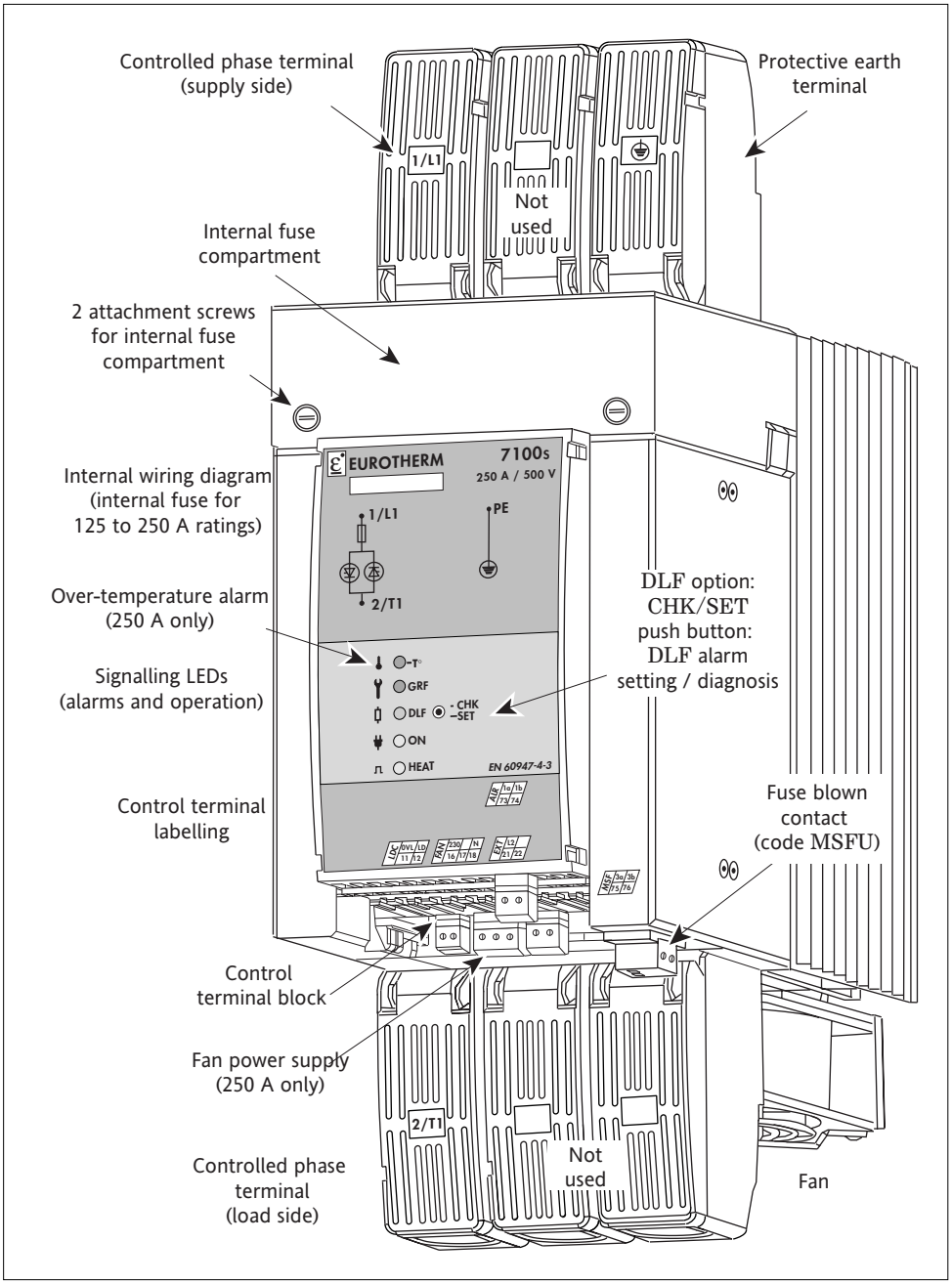

Figure 1-3 General view of 7100S, 250 A rating (here with DLF, DC logic input, 230V fan power supply)

Version with Analogue Retransmission Option

The Retransmission option (only available with the DLF option) provides an analogue signal which follows the rms load current.

Figure 1-4 shows a general view of a 7100S unit with DLF and Retransmission options (here with analogue ATP input signal and Burst mode firing).

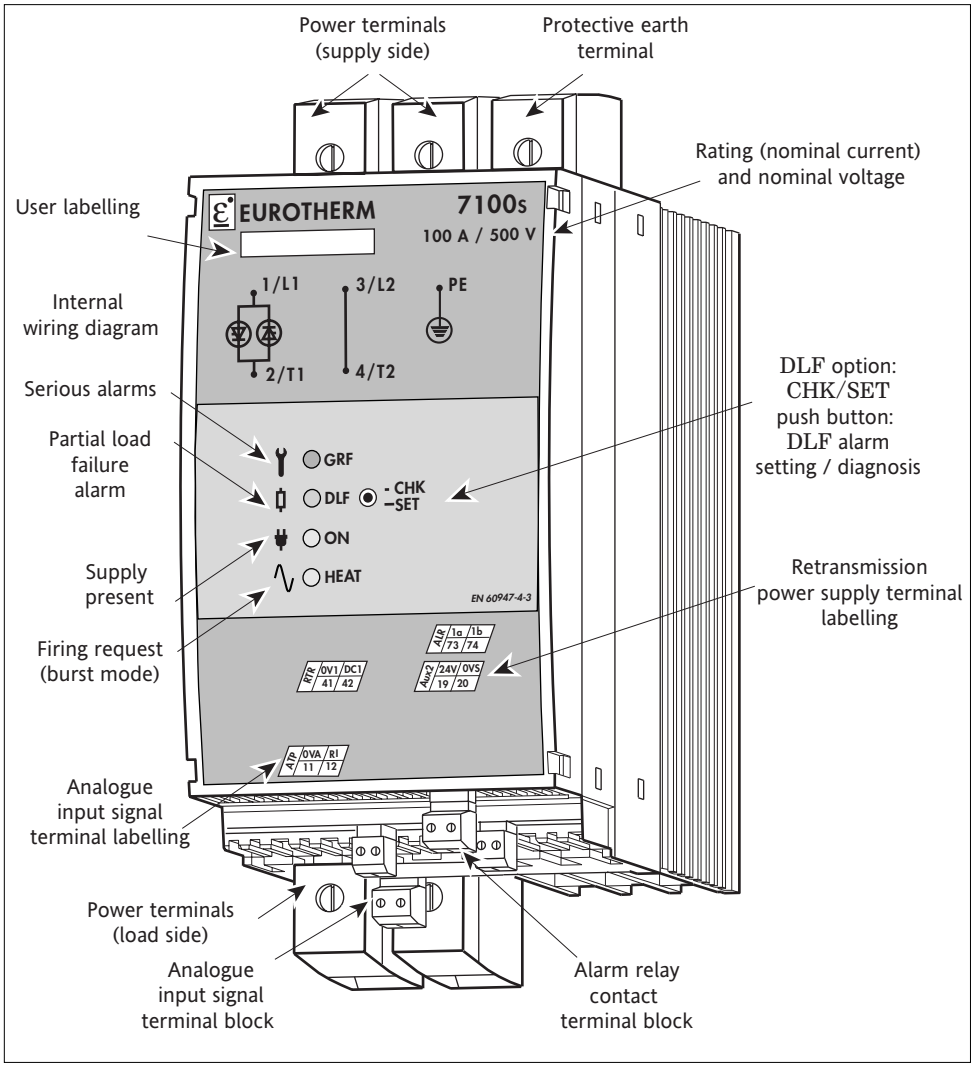

Figure 1-4 General view of 7100S with Retransmission option (here with 100 A rating, analogue input)

Version with digital communication option

Digital communication (RS485 bus) provides 7100S solid state contactors with digital control and retransmission of various values and operating parameters (the DLF option is required to transmit the load current).

The operation of the digital communication option is described in the manual ’7000 Series. Digital Communication’ (part number HA176664ENG available later).

Figure 1-5 shows the general view of a 7100S unit with the digital communication option.

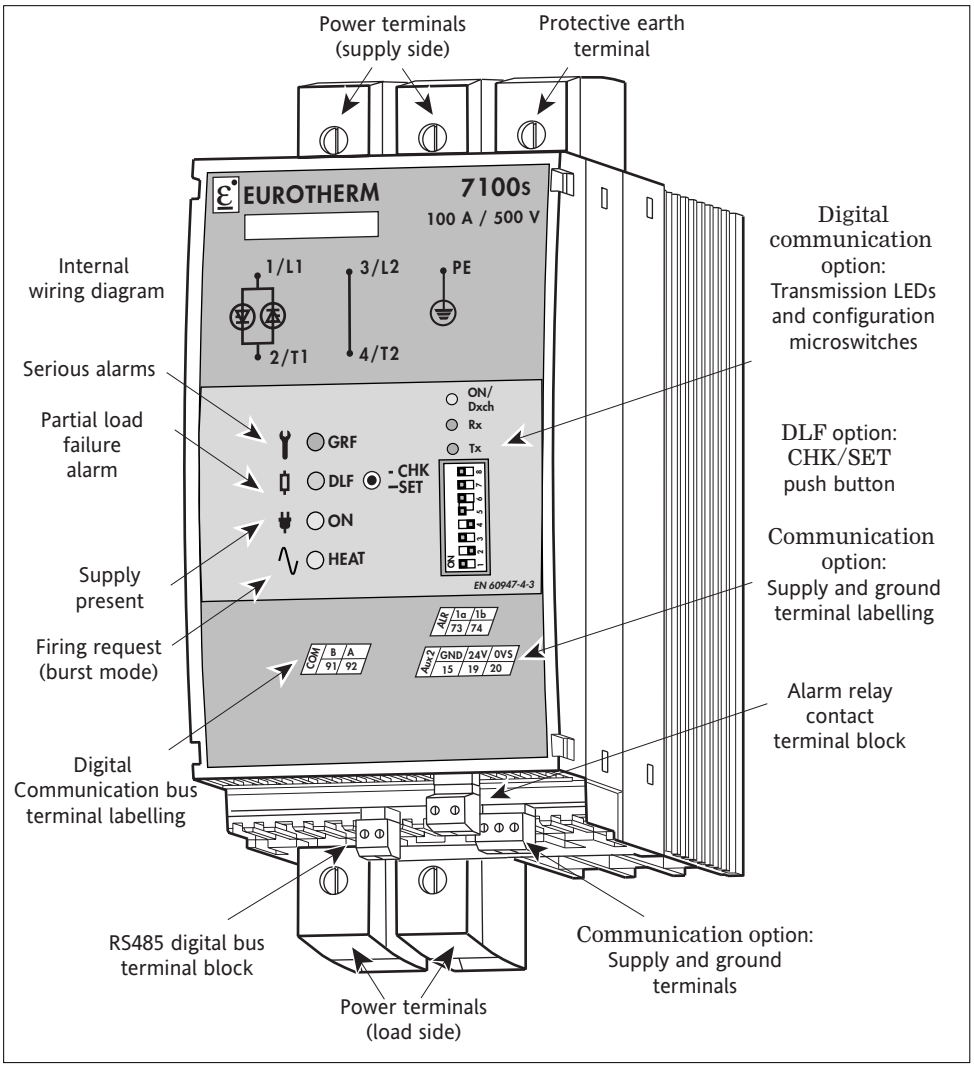

Figure 1-5 General view of 7100S with DLF and communication options (here with 100 A rating)

TECHNICAL SPECIFICATIONS

USE

In accordance with product standard EN 60947-4-3:
Devices for continuous duty:
1. Semiconductor contactor variant 5:
   Logic input signal:
   - DC (LDC input) or
   - AC (HAC input).
2. Thyristor unit variant 4:
   4-20 mA analogue input signal (ATP input)
   or digital communication option.

Configuration as product code.

POWER

Nominal current	16 A to 250 A (at 45°C) depending on product code (see coding).
Nominal voltage	100 V to 500 V (+10% and -15%) available depending on product code.
Frequency	Use from 47 to 63 Hz (automatic matching)
Dissipated power	typical 1.3 W per amp (2 W max., fuses included)
Cooling	Natural convection (ratings up to 200 A) or Fan (ratings over 250 A); consumption 10 VA (115 V or 230 V external power supply).

LOAD

Categories of use

The categories of use applicable for each unit are indicated on the identification label.
- AC-51 Non-inductive or low inductance loads, furnace resistances (resistive load with low temperature coefficient).
- AC-55b Switching of incandescent lamps, short wave infrared elements (*SWIR).*

FIRING MODES

Thyristor switching: At thyristor voltage zero crossing.

'Logic' mode

DC signal applied to LDC input
AC signal applied to HAC input

'Burst' mode

Supply voltage modulated by analogue signal applied to ATP input
(Analogue to Time Proportional).
Firing base time: approx. 15 cycles

With 'Digital Communication' option
(available later) firing base time:
- 1 half-cycle ('Advanced single-cycle' mode)
- 1 cycle ('Single-cycle' mode)
- 16 or 64 cycles ('Burst mode').

CONTROL

Power supply	Self-powered electronics.
'Logic' firing:	
•DC signal (LDC input)	Conducting from 4.5 Vdc to 32 Vdc max, current ≥ 9 mA. Off < 1.5 V or < 0.1 mA. Typical response time ≤ 10 ms.
• AC signal (HAC input)	Conducting from 85 to 253 Vac max. Impedance ≈ 7 kΩ at 50 Hz. Off < 10 Vac. Typical response time ≤ 60 ms. If an RC snubber contact protection circuit or control optotriac is used, the maximum capacitor value is 22 nF for 240 Vac
'Burst mode' firing:	
• Analogue signal (ATP input)	4 - 20 mA (10 Vdc max). Modulation depending on analogue signal. Firing base time: 0.3 s.
• Digital signals (COM input)	Digital communication option (available later); Modbus® protocol.

CONTROL

Control type	ATP input only: Open loop, no compensation of supply voltage variations. Digital communication option: Supply voltage compensation operates for variations of up to ±20% of nominal voltage, using V^2 control
Linearity and Stability	Better than ±2% of full scale on sinusoidal supply.

SIGNALLING

All versions

Supply present	Green 'ON' LED.
Thyristor firing request	Green 'HEAT' LED.

Alarm option

Red LED (serious alarms) **GRF** and / or
Orange LED (**DLF** alarm).
Alarm relay contact.

Communication option

Front panel LEDs	Green LED (power supply and exchange status) and two Orange LEDs (Receive and Transmit data).
Communication bus	Read and write operating parameters (load current available with DLF option). Retransmission of all types of alarm.

ALARMS (Options)

GRF option

Serious alarms	Total load failure (TLF) and thyristor short circuit (THSC) detection.
Signalling	When a serious alarm is detected: • the red 'GRF' LED is lit • the alarm relay contact is activated.

DLF option

Diagnostic alarm	Partial load failure detection and diagnosis. *Important*: For SWIR elements the DLF option applies: • if the elements are powered at nominal voltage and • in 'Single-cycle' mode only (available with digital communication option or with Eurotherm REMIO/TPO or i7000 synchronised interfaces).
Signalling	If a partial load failure (PLF fault) is detected: • the orange 'DLF' LED is lit • the alarm relay contact is activated.
Settings	The front panel push button is used for: • monitoring and diagnosis • adjusting and resetting the alarm.
Sensitivity	Detects the failure of at least one heating element for *six* identical elements connected in parallel (one element in *four* for SWIR elements).
Extension	The DLF option includes Serious alarm monitoring (GRF option included).

Over-temperature alarm

Operation	For all fan-cooled units (≥ 250 A), the unit stops firing if the temperature threshold is exceeded regardless of the options fitted.
Signalling	Red 'T°' LED and Alarm relay contact (if one of the alarm options is selected).

Alarm relay

Fitted if one of the alarm options is selected.
The relay contact (0.25 A/230 Vac or 30 Vdc) is either open on alarm or closed on alarm depending on the product code.

RETRANSMISSION or COMMUNICATION (exclusive options)

RETRANSMISSION

Availability	Isolated analogue retransmission is available with the DLF option but without the digital communication option.
Retransmitted value	Analogue image of rms load current. The rms current is calculated: • over the modulation period (in burst mode with ATP input) • over a fixed duration of 1.6 s (Logic mode, LDC or HAC input).
Output signal	Selected on ordering: • 4-20 mA current, Vmax = 12.5 V on 500 Ω resistor • 0-10 V voltage, Imax = 24 mA on 500 Ω resistor.
Power supply	24 Vac (±20%), 47 to 63 Hz or 24 Vdc (±20%) non-polarised. Typical consumption 1.5 VA Protection: external 2 A fuse.

DIGITAL COMMUNICATION

Availability	The digital communication option is exclusive with: • the Retransmission option or • control using the logic or analogue input signal.
Protocol Compliance	Modbus® RTU. Communication complies with the specifications given in 'GOULD MODICON Protocol Reference Guide PI-MBUS-300 rev J'.
Power supply	24 Vac (±20%), 47 to 63 Hz or 24 Vdc (±20%) non-polarised. Typical consumption 1.5 VA Protection: external 2 A fuse. External wiring should comply with standard IEC 60364.
Transmission	Standard RS485, 2 wires. Speed: 9600 or 19200 baud. Selected by switch on front panel. The speed is factory set to correspond to the selected product code.
Termination	The communication bus must have termination resistors fitted at each end: • one line impedance matching resistor. • two RS485 bus polarisation resistors.
Address	Adjustable between 1 and 127 using front panel switches only. The physical address is factory configured to 32 by default.
Diagnostic	• Green LED on front panel indicates power presence, waiting for frames, communication established. • Two orange LEDs show the status of the communication bus (transmission or reception).
Control	Supply voltage compensation operates for variations up to ±20% of nominal voltage, using V^2 control
Parameters and operating mode	Read and write by digital communication (see Digital communication manual, part No. HA176664ENG).
Firing base time	Configurable over communication link: • 1 half-cycle ('Advanced single-cycle' mode) • 1 cycle ('Single-cycle' mode) • 16 or 64 cycles ('Burst mode'). The default base time is factory configured to 16 cycles.

PROTECTION

Co-ordination type for short circuits	Type 1 (quick-acting fuses).
Electrical protection	IP20 without adding additional protection.
Thyristors	Varistors and RC snubbers. Quick-acting fuses (except for Short wave infrared elements): • rating ≤ 100 A: external • rating ≥ 125 A: internal. With MSFU code (selection corresponds to code): • for external fuses, the fuse blown contact is wired directly on the fuse; • for internal fuses, the contact (open after fuse blows) is accessible on the 'MSF' terminal block Replacement fuses: see section 4.

ENVIRONMENT

Use	0 to 45°C at nominal current, at maximum altitude of 1000 m.
Storage	-10°C to +70°C.
Isolation voltage	Assigned isolation voltage V_i = 500 V_{rms}
Pollution	Degree 2 acceptable (defined by IEC 60664).
Humidity	RH 5% to 95%, non-condensing, non-streaming.
Over-voltage	Over-voltage category II (as defined by IEC 60664) V_{imp} = 4 kV.

Mounting

Mounting	• rating ≤ 100 A: attachment plate(s) fixed to unit: - on symmetrical EN50022 DIN rail or - bulkhead mounting. • rating ≥ 125 A: bulkhead mounting only.

DIMENSIONS AND WEIGHT

Rating	Height	Width (mm)		Depth (mm)		Mass (kg)	
(A)	(mm)	Basic	Options	Basic	Options	Basic	Options
16	156	35	52.5	110	135	0.42	0.56
25	156	35	52.5	140	165	0.56	0.7
40	156	52.5	52.5	140	165	0.8	0.9
63	156	70	70	160	185	1.3	1.45
80-100	226	96	96	164	189	1.7	1.85
125-200	424	144	144	285	285	5.1	5.6
250	424	144	144	285	285	5.6	6.0

Eurotherm's policy of continuous product improvement and development means that the specifications in this document may be modified without prior notice.

CODING

7100S Current / Voltage / Filter / Fan / Fuse / Input / Manual / Selected / options

Ratings and Basic selection

1. Nominal current	Code
16 amps	**16A**
25 amps	**25A**
40 amps	**40A**
63 amps	**63A**
80 amps	**80A**
100 amps	**100A**
125 amps	**125A**
160 amps	**160A**
200 amps	**200A**
250 amps	**250A**
315 amps	**315A***
400 amps	**400A***
500 amps	**500A***
630 amps	**630A***

2. Nominal voltage	Code
127 volts	**127V**
230 volts	**230V**
277 volts	**277V**
500 volts	**500V**
690 volts	**690V***

3. Internal EMC filter	Code
16A to 40A: with filter only	**FILT**
63A to 100A:	
• with filter	**FILT**
• no filter	**NONE**
≥ 125A: no filter only	**NONE**

4. Fan	Code
16A to 200A: no fan	**XXXX**
≥ 250A: fan	
• 115 V supply	**115V**
• 230 V supply	**230V**

5. High speed fuse	Code
Thyristor protection fuse	
• without microswitch	**FUSE**
• with microswitch	**MSFU**
(≤ 100 A: external fuse ≥ 125 A: internal fuse)	
No fuse or control of short wave infrared elements	**NONE**

6. Input	Code
Communication option (without logic or analogue input)	**NONE**
No communication.	
Logic firing:	
DC logic signal 4.5 Vdc to 32 Vdc	**LDC**
AC logic signal 85 Vac to 253 Vac	**HAC**
'*Burst mode*' firing:	
Analogue DC signal 4 mA to 20 mA	**ATP**

7. Manual language	Code
French	**FRA**
English UK	**ENG**
German	**GER***
English USA	**USA***
Spanish	**SPA***
Italian	**ITA***

8. Selected options	Code
No options ***End** of code*	**NONE**
Selection of options	**YES**

Alarm option Type / Load / Contact /	Communication or Retransmission Option Protocol or / Speed or retransmitted Retransmission signal	/	Certificate option

Options (*Options selected:* ***YES***)

9. Alarm option	Code
Serious Alarms: Thyristor short-circuit, Total Load failure, (over-temperature for ≥ 250 A) Partial load failure and Serious alarms	 **GRF** **DLF**
No alarms	**NONE**

12. Communication or retransmission option *	Code
Digital communication Modbus® protocol Analogue retransmission (DLF option required)	 **MOP** **RTR**
No communication or retransmission	**NONE**

10. Load type	Code
For ***DLF option:*** • Resistive load with low temperature coefficient • Short wave infrared elements	 **LTCL** **SWIR**
Without DLF option	**XXXX**

13. Transmission speed * or retransmitted signal	Code
Code MOP. Transmission speed: 9.6 kbaud 19.2 kbaud *Codes RTR and DLF.* Analogue rms current retransmission output: current 4-20 mA voltage 0-10V	 **9K6** **19K2** **4mA20** **0V10**
Code NONE. No communication or retransmission	 XXXX

11. Alarm relay contact	Code
GRF *or* ***DLF*** *option:* Alarm relay contact • Closed on alarm • Open on alarm	 **NC** **NO**
Without alarm option	**XX**

14. Certification option	Code
Without certificate of 'Compliance with Order'	**NONE**
With certificate of 'Compliance with Order'	**CFMC**

*** Available later**

EXAMPLE CODE

Nominal load current	85 amps.
Supply voltage	220 volts (EMC filter required).
Thyristor protection fuse	Yes, with microswitch.
Firing and input	'Burst mode' with analogue signal.
Manual language	English.
Option	Serious alarms and 'Partial load failure' alarm.
Load used	Resistance with low temperature coefficient.
Alarm relay contact	Open on alarm.
Digital communication	No digital communication.
Retransmission	Analogue retransmission of rms current: 0-10 V.
Certification	Certificate of 'Compliance with order'

Corresponding product code:

7100S 100A/230V/FILT/XXXX/MSFU/ATP/ENG/YES/DLF/LTCL/NO/RTR/0V10/CFMC

IDENTIFICATION LABEL

An identification label, giving full information about the characteristics of the unit and the product identification code, is affixed to the left hand side of the unit.

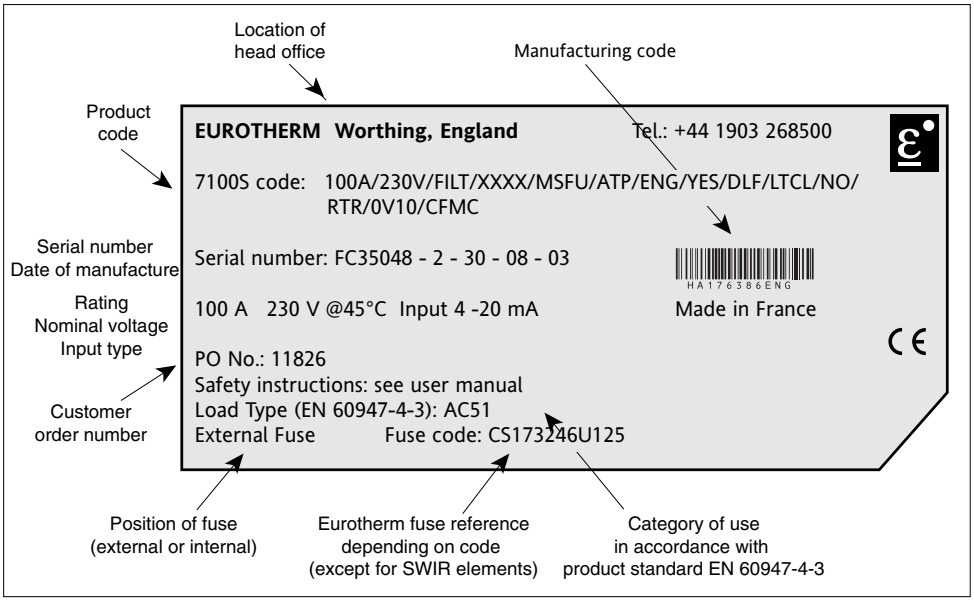

Figure 1-6 Typical identification label (corresponds to example code)

Chapter 2

INSTALLATION

Contents Page

Chapter 2 installation

SAFETY DURING INSTALLATION (MOUNTING AND WIRING)

Danger!

• 7100S solid state contactors must be installed and wired by qualified staff authorised to work on low voltage industrial electrical facilities.

• Units must be installed in a fan-cooled cabinet, to ensure that condensation and pollution are excluded. We recommend fitting fan-cooled cabinets with a fan failure detection device or a thermal safety cut-out.
The cabinet must be closed and connected to the protective earth according to IEC 364 or applicable national standards.

• Units must be mounted with the heatsink positioned vertically, and with no obstructions above or below the unit which could reduce or hamper air flow.
If several units are fitted in the same cabinet, arrange them such that air from one unit is not drawn in by the unit above.
Leave a gap of at least 10 mm between two adjacent units.

Important!

• Nominal currents correspond to use at ambient temperatures of no more than 45°C. Overheating may cause incorrect operation and may even lead to components being damaged.

Danger!

• It is the user's responsibility to wire and protect the facility according to best practice and applicable standards.
A suitable device, ensuring that the unit can be electrically isolated from the supply, must be installed upline to enable work to be performed safely.
Conductor cross-sections should comply with IEC 943.
Use only copper cables and wires designed for use at up to 75°C.

• Before connecting or disconnecting the unit check that power and control cables and leads are isolated from voltage sources.
The protective earth must be connected before any other connections are made and should be the last cable to be disconnected.
The protective earth connection terminal is marked with the symbol

Important!

• To ensure that 7100S solid state contactors comply with Electromagnetic Compatibility requirements, ensure that the panel or DIN rails to which they are attached is correctly grounded.
The ground connection, designed to ensure **ground continuity**, is not in any way a substitute for the protective earth connection.

MOUNTING

TYPES OF MOUNTING

Two types of mounting are possible:
- DIN rail mounting or
- bulkhead mounting with screws.

Current rating	DIN rail mounting		Bulkhead mounting	
	Attachment plate	DIN rails	Attachment plate	Screws
16 A to 63 A	One vertical plate	One EN 50022 symmetric rail	One vertical plate	2 × M4
80 A and 100 A	Two horizontal plates	Two EN50022 symmetric rails	Two horizontal plates	4 × M4
≥ 125 A	Not suitable		Two plates with keyhole-type holes	4 × M6

Table 2-1 Attachment details for both mounting types

ATTACHMENT PLATE

The **attachment plate**, shipped fitted to the rear of the 7100S unit, is used:
- to clip the unit to DIN rails (ratings from 16 A to 63 A) or
- for bulkhead mounting with attachment screws (ratings from 80 A to 250 A).

Ratings 16 A to 100 A

Each attachment plate has:
- two fixed hooks and two mobile hooks for clipping to a DIN rail; the mobile hooks are moved using a catch and spring (figures 2-1 and 2-2)
- attachment holes for bulkhead mounting (figures 2-3 and 2-4).

For **DIN rail** mounting (figures 2-1 and 2-2):
- fix one symmetric DIN rail (rating 16 A to 63 A) or two rails (rating 80 A and 100 A), in accordance with the unit dimensions and safety recommendations
- place the unit against the top rail, engaging the two fixed hooks
- push the unit against the rails
- clip the unit onto the bottom rail using the mobile hooks, ensuring that they are properly engaged.

To remove the unit:
- move the mobile hooks downwards by pulling on the catch
- unclip the unit from the rail.

Ratings 125 A to 250 A

For bulkhead mounting, two attachment plates are provided, each with two keyhole-type mounting holes to allow clearance for the heads of the M10 screws (figure 2-5).

MOUNTING ON DIN RAILS

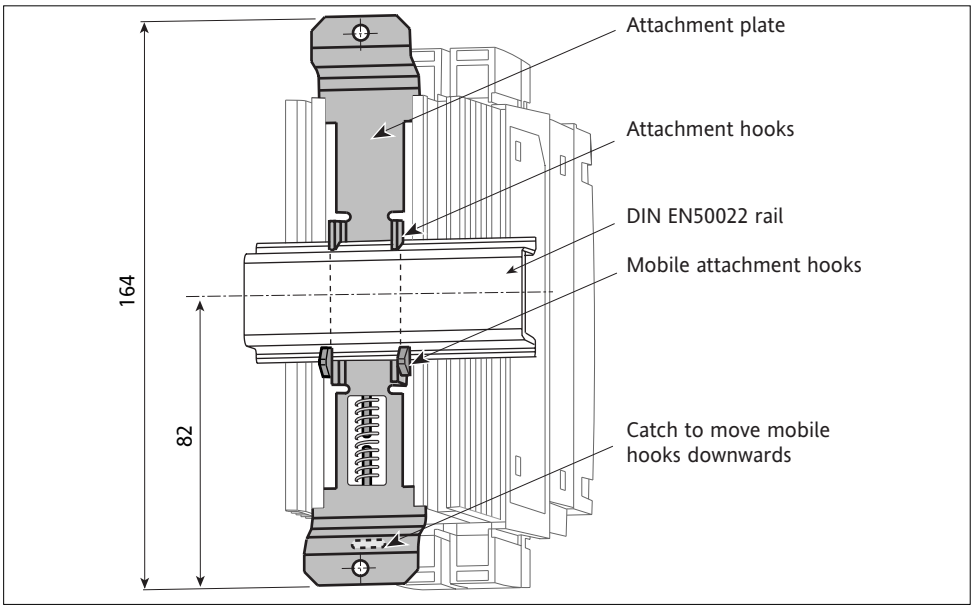

Figure 2-1 Attaching the 7100S solid state contactor to a DIN rail (16 A to 63 A, rear view)

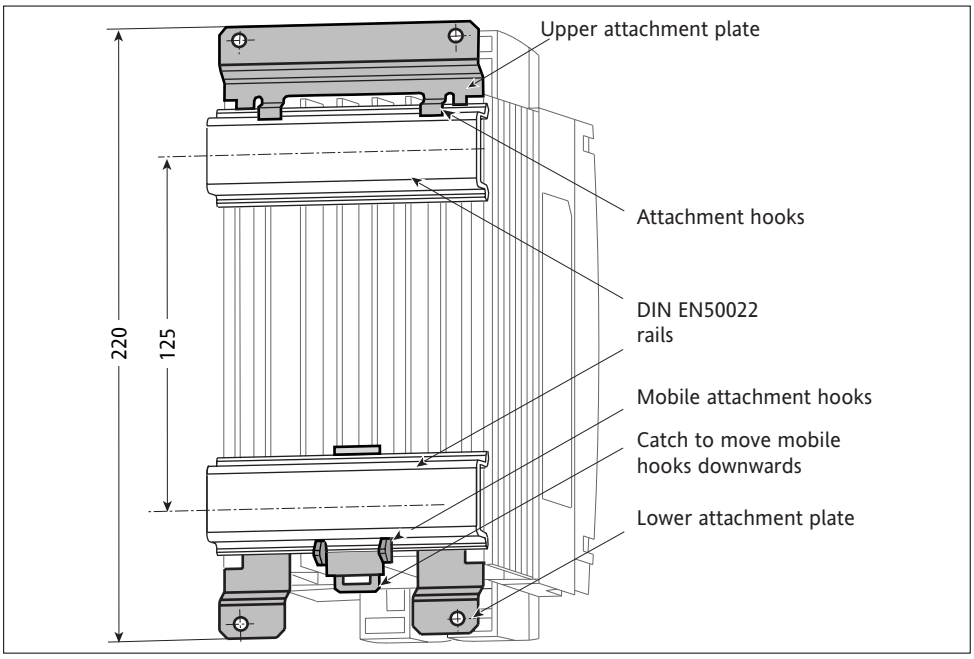

Figure 2-2 Attaching the 7100S solid state contactor to DIN rails (80 A and 100 A, rear view).

BULKHEAD MOUNTING

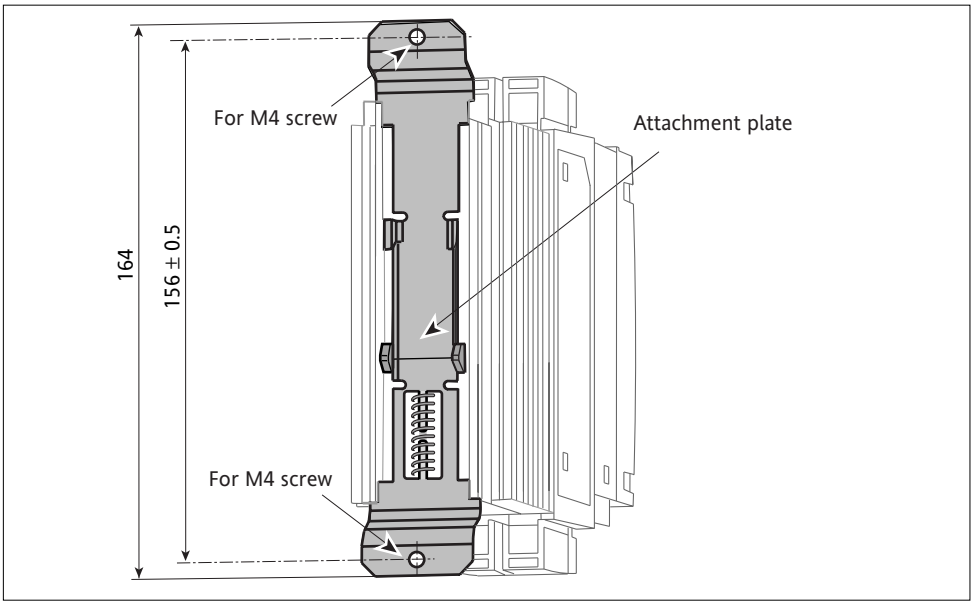

Figure 2-3 Mounting the unit using an attachment plate for bulkhead mounting (16 A to 63 A, rear view)

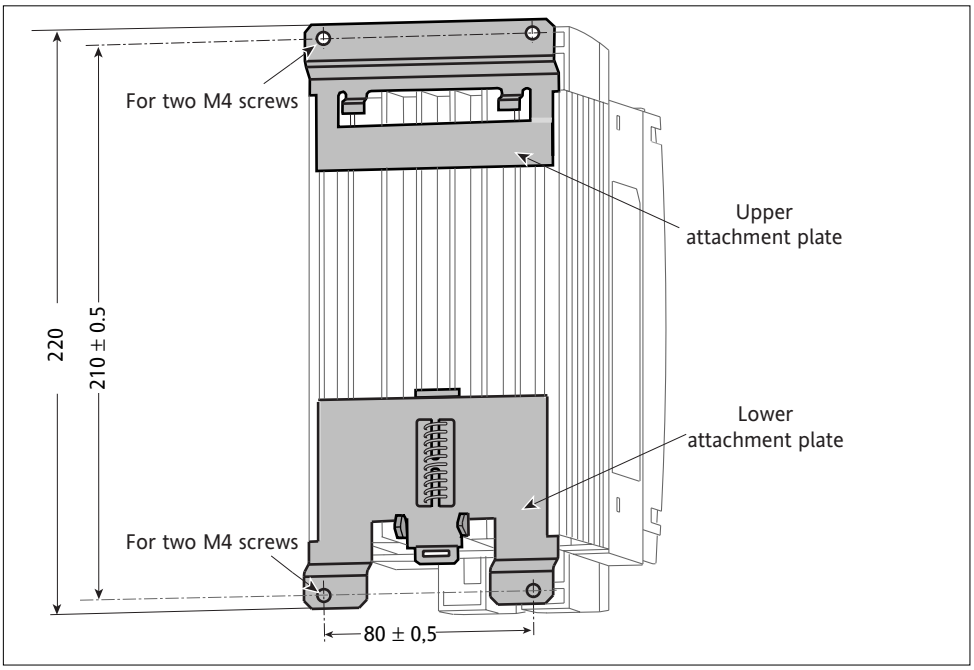

Figure 2-4 Mounting the unit using an attachment plate for bulkhead mounting (80 A and 100 A, rear view).

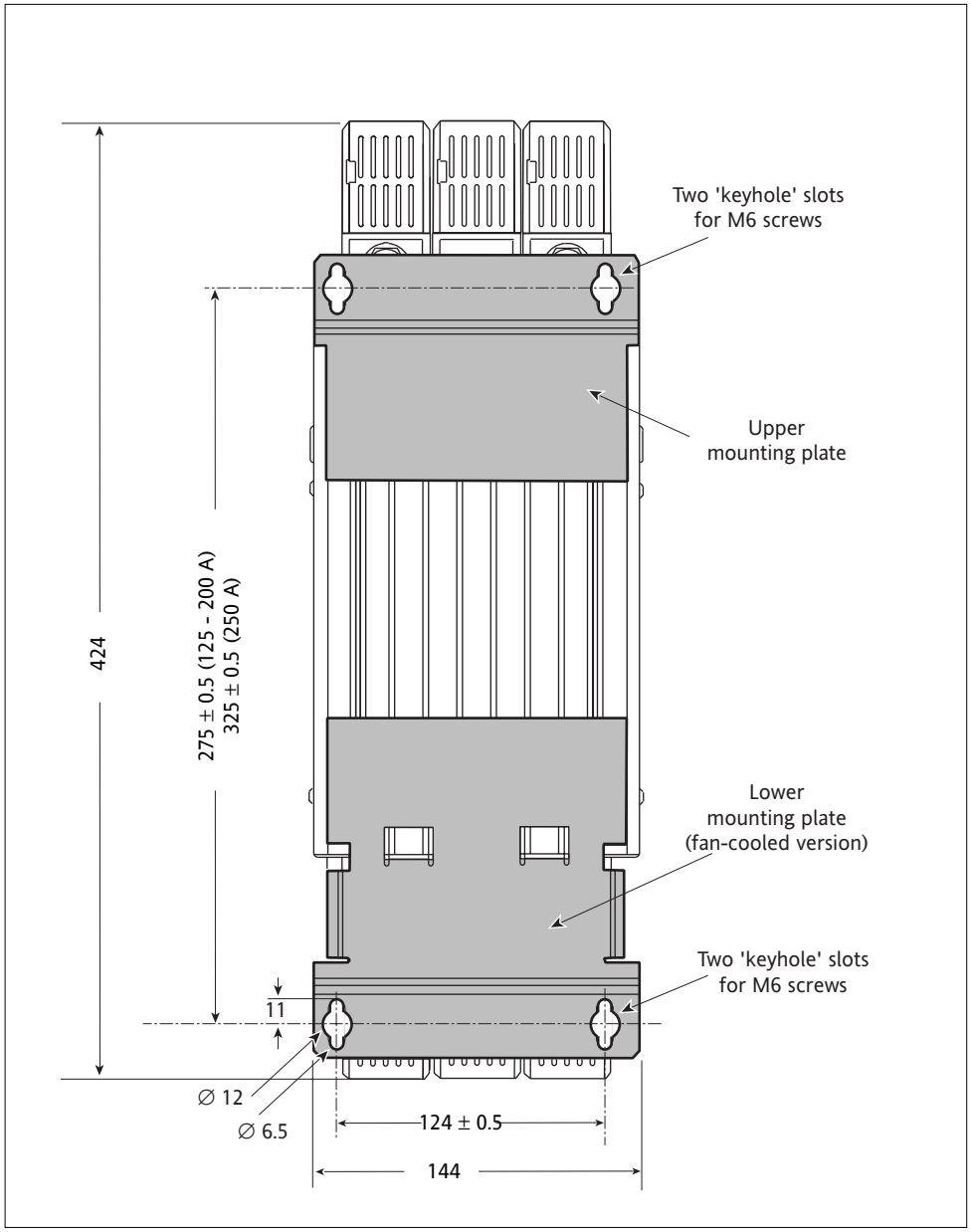

Figure 2-5 Bulkhead mounting for ratings 125 A to 250 A (fan-cooled unit, rear view).

WIRING

POWER CONNECTIONS

The protective earth terminal **PE** (marked with the earth symbol) must be wired to the protective earth (see section 'Safety during installation').

Ratings 16 A to 100 A

7100S units with current ratings of up to 100 A have:

- one channel **controlled** by thyristors
- an **internal** busbar for directly connecting the load to the power supply (**direct** channel, not controlled by thyristors).

The wiring diagram for this range of standard current ratings is shown in figure 2-6:

- terminals **1/L1** (controlled channel) and **3/L2** (direct channel) on the unit must be wired to the supply network
- terminals **2/T1** (controlled channel) and **4/T2** (direct channel) on the unit must be wired to the load.

Ratings 125 A to 250 A

7100S units with current ratings from 125 A to 250 A have one channel **controlled** by thryistors (terminals **1/L1** and **2/T1**). The **direct** phase is wired **externally** (between the load and the second phase or neutral, as on figure 2-7).

The second phase (or neutral) used must be connected to the 'EXT' terminal block to provide the reference voltage for control (see figure 2-7).

Wiring details

Rating A	Terminal capacity * mm²	Terminal capacity * AWG	Stripping length mm	Crimp eyelet	Clamping torque Nm
16 to 25	2.5 to 6	13 to 9	13	-	1.2
40 to 63	6 to 16	9 to 5	13	-	1.8
80 to 100	16 to 35	5 to 2	20	-	3.8
125	50 to 120	0	-	∅10 (or ∅12)	16.4 (or 28.8)
160	70 to 120	00			
200	95 to 120	000			M10 nut (17 mm wrench) to attach eyelet and terminal.
250	120	-			

Table 2-2 Power connection details for ratings from 16 A to 250 A

* For certain flexible cables (up to 35 mm²) a screw connector should be used.

POWER CONNECTION DIAGRAM

The power connection to 7100S units is between one phase and neutral or between two phases depending on the nominal voltage for the unit.

Ratings 16 A to 100 A

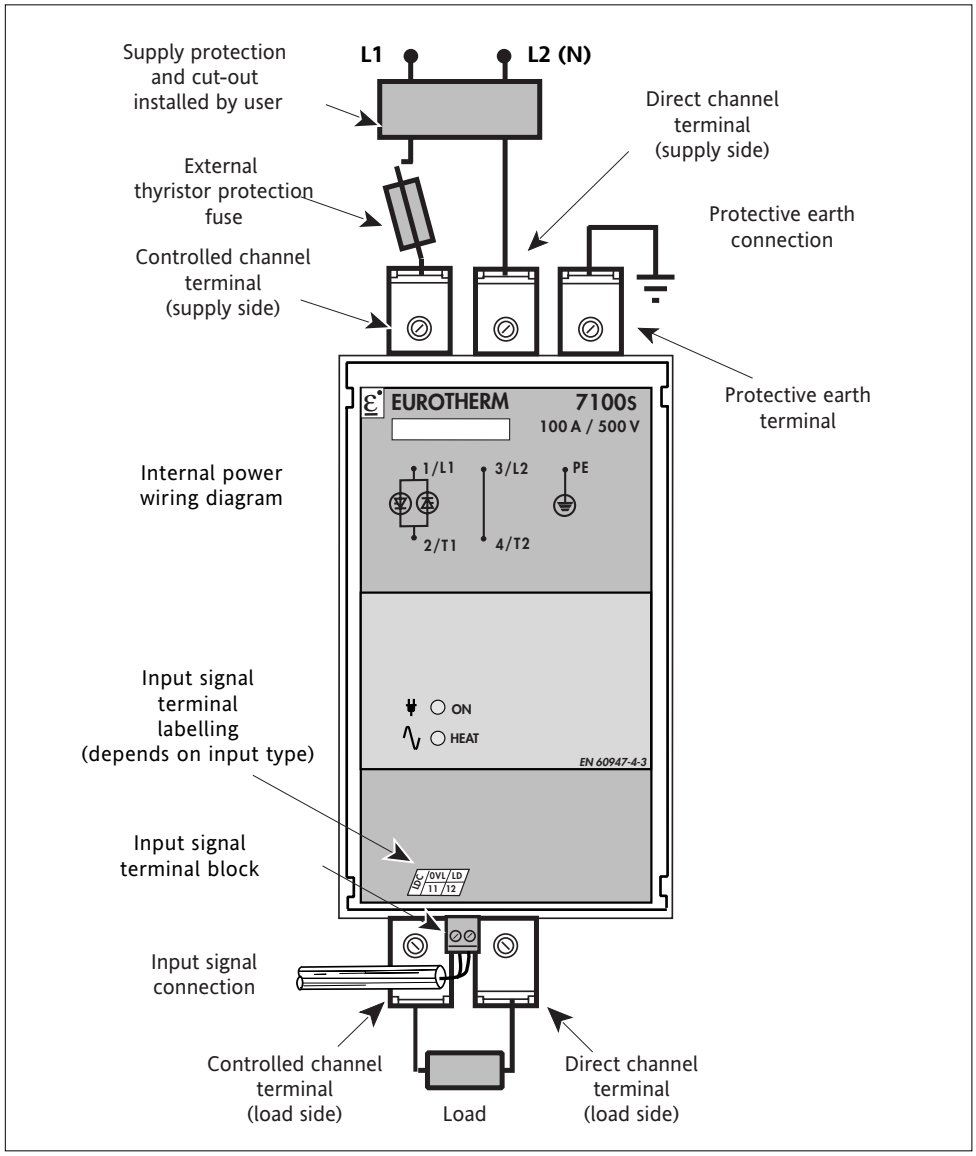

Figure 2-6 Power connections and input signal on Basic version (ratings up to 100 A)

Ratings 125 A to 250 A

The controlled channel of the 7100S is connected between **a phase** and the **load**; the **direct**, exrenal link connects the second supply phase (or neutral, depending on the voltage used) to the load.

For the 250 A rating the **fan power supply** must be connected to the **FAN** terminal block. A **115 V** supply is connected to terminals **17** and **18** or a **230 V** supply to terminals **16** and **18**, depending on the product code. This external power supply must be protected by a **2 A fuse** (2 fuses if the auxiliary supply is line to line).

The internal fuse blown contact (with code **MSFU**) is available on the **MSF** terminal block

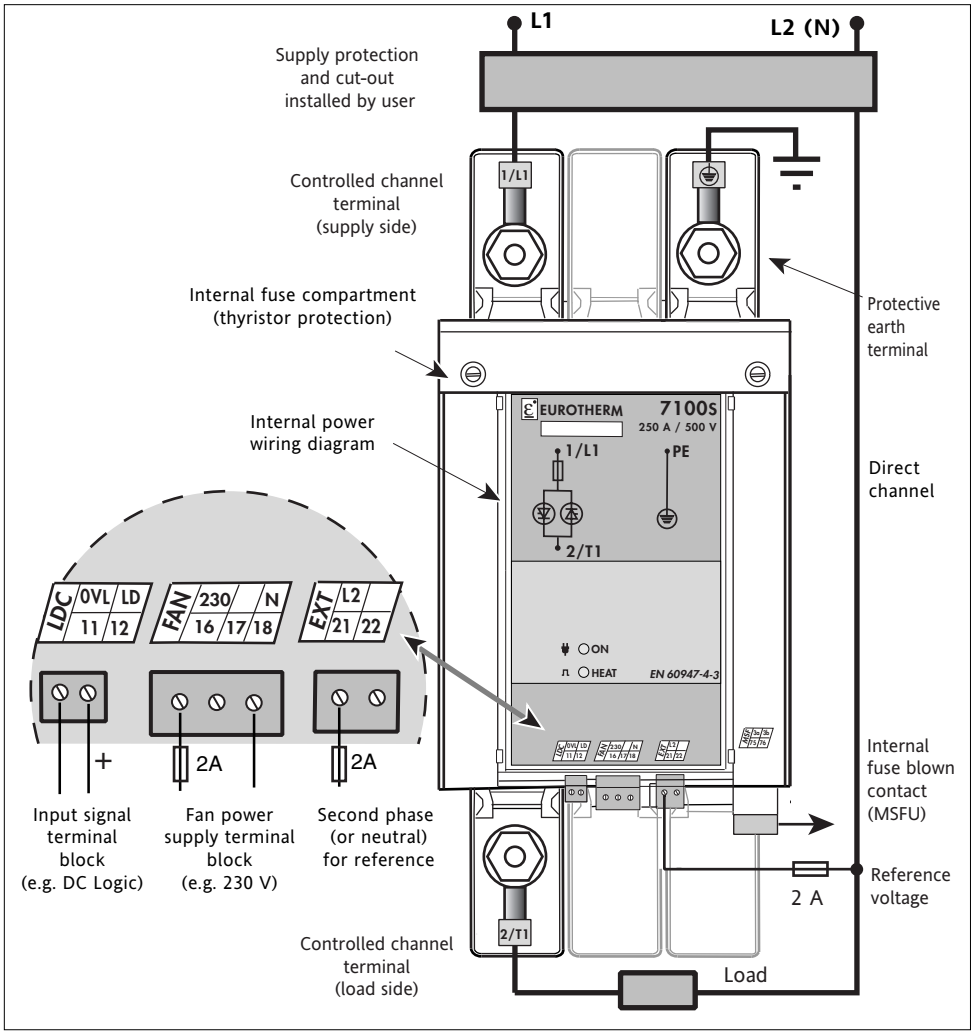

Figure 2-7 Power and control connections for 7100S (here 250 A rating, Basic version)

CONTROL CONNECTIONS

The control terminal blocks are plug-in screw connectors, located on the underside the unit (see figures 1-1 to 1-5).

Control signal

The control signal input terminals correspond to the selected input type.

Input code and type	Terminal block	Terminal number	Terminal label	Terminal capacity		Clamping torque	Stripping mm
				mm^2	AWG	Nm	
LDC: Logic, 4.5 - 32 Vdc	LDC	11 12	0V LD	1.5	16	0.5	6 to 7
HAC: Logic, 85 - 253 Vac	HAC	11 12	A1 A2	2.5	14	0.7	6 to 7
ATP: Analogue, 4 - 20 mA DC	ATP	11 12	0V RI	1.5	16	0.5	6 to 7

Table 2-3 Description of control input terminal block

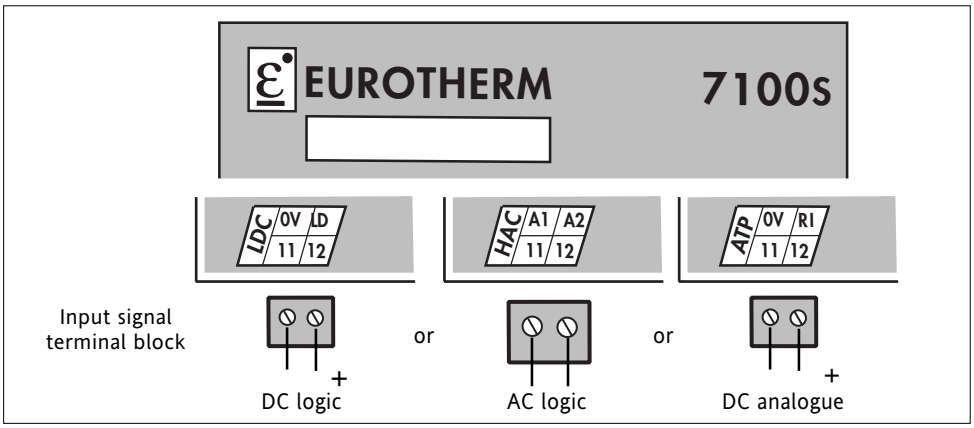

Figure 2-8 Front panel labels for the different input types

Important!

The DC inputs (**LDC** and **ATP**) are **polarised**.
The '+' of the control signal must be connected to terminal **12** (labelled **LD** for the LDC input and **RI** for the ATP input).

Alarm relay contact (alarm option)

If one of the alarm options is fitted, an alarm relay contact is available on the '**ALR**' terminal block. The type of contact (closed or open on alarm) is determined by the product code. Contact switching capacity: **0.25 A** (maximum 250 Vac or 30 Vdc).

Option Code	Terminal block	Terminal number	Terminal label	Terminal capacity		Clamping torque	Stripping mm
				mm²	AWG	Nm	
GRF: serious alarms or **DLF:** DLF alarm and serious alarms	ALR	Code **NC**: 71 , 72 Code **NO**: 73, 74	1a, 1b	2.5	14	0.7	6 to 7

Table 2-4 Description of Alarm relay contact terminal block

Important: For **fan-cooled** units (250 A and above) with either the **GRF** or **DLF** options the **ALR** contact also signals the **over-temperature alarm** ('**T°**' LED on).

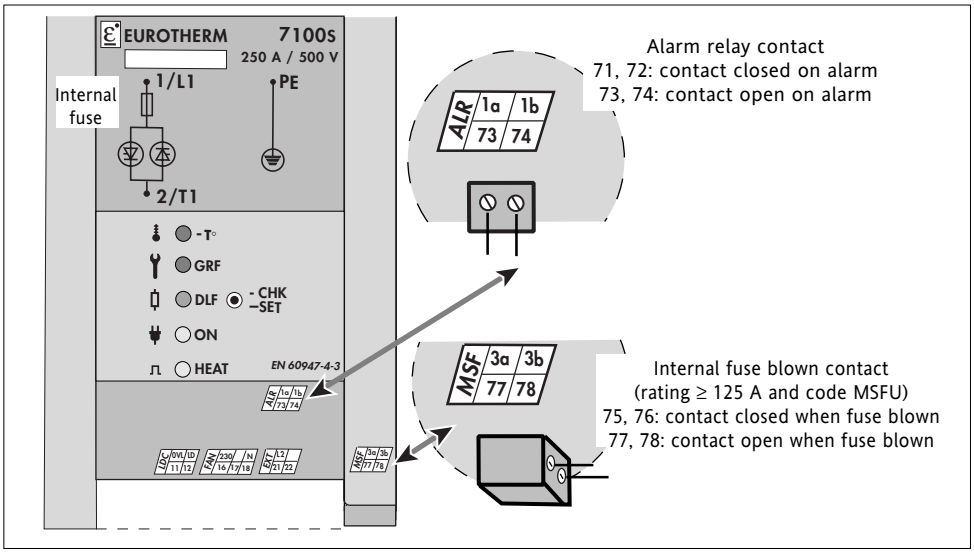

Figure 2-9 Alarm and fuse blown contact connections (here with internal fuse, fan-cooled unit, logic signal)

Internal fuse blown contact (125 - 250 A)

For units with an **internal** fuse (ratings 125 to 250 A) and code **MSFU**, a fuse blown contact is available on the '**MSF**' terminal block (see figure 2-9). The terminal capacity and torque are identical to those for the alarm contact (table 2-4).

The **normally-closed** fuse blown contact is connected when the unit leaves the factory (terminals **77** and **78**).

Reference voltage connections (125 - 250 A)

For ratings between **125** and **250 A** the non-controlled phase is connected outside the unit.
To make the reference voltage available for the electronic circuits, the power voltage must be wired to the unit.

This external wiring uses terminal **L2** on the '**EXT**' terminal block (125 to 250 A only).
Terminal **L2** must be connected to the second phase (or neutral) of the power supply. This link must be protected by a **2 A** fuse (see figure 2-7, page 2-9).
The second terminal of this terminal block is not used.

Rating A	Terminal block	Terminal number	Terminal label	Terminal capacity mm²	Terminal capacity AWG	Clamping torque Nm	Stripping mm
16 - 100	-	-	-	-	-	-	-
125 - 250	EXT	21, 22	L2 , -	2.5	14	0.7	6 to 7

Table 2-5 Description of reference voltage terminal block

Retransmission connections

Analogue retransmission of the rms load current (code **RTR**) is available on the '**RTR**' terminal block (terminals **0V1** and **DC1**, numbers 41 and 42). The output signal (current **4–20 mA** or voltage **0-10 V**) is selected when ordering.

The power supply for the retransmission circuit (24 Vac ±20% or 24 Vdc ±20% non-polarised) must be connected to the '**Aux2**' terminal block (terminals **24V** and **0VS**, numbers 19 and 20). Terminal capacity **1.5 mm²**, torque **0.5 Nm**.

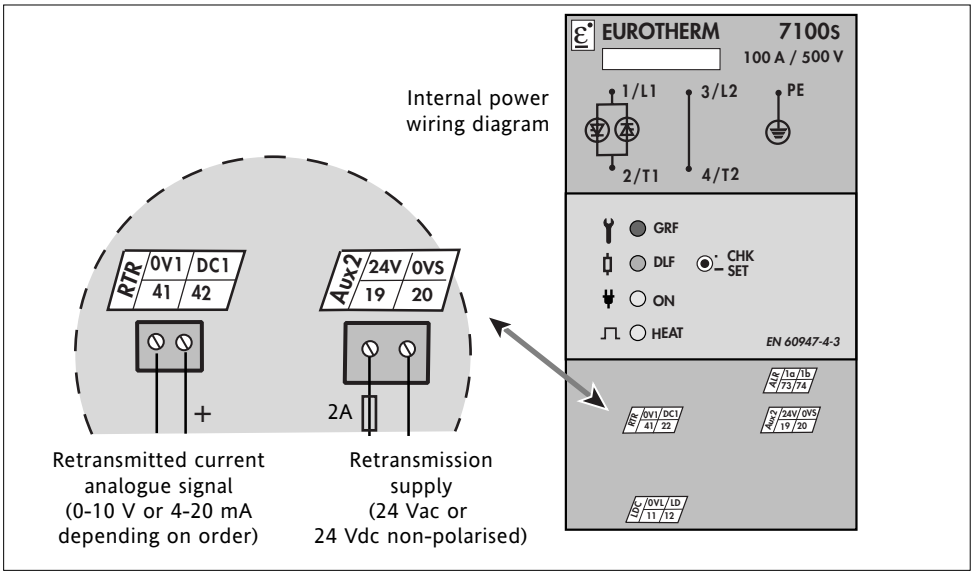

Figure 2-10 Details of retransmission connections

Chapter 3

OPERATION

Contents Page

Chapter 3 OPERATION

FIRING MODES

LOGIC SIGNALS (‘Logic’ mode)

When logic signals (DC or AC voltages depending on the product code) are applied to the **LDC** or **HAC** inputs, the 7100S unit fires in ‘**Logic**’ mode (i.e. operation equivalent to solid state contactors). Firing corresponds to supply half-cycles.

In ‘Logic’ mode thyristor firing starts and stops at zero voltage crossing, taking into account the response time (delay relative to signal). The typical response time is ≤ **10 ms** for the **LDC** input and ≤ **60 ms** for the **HAC** input.

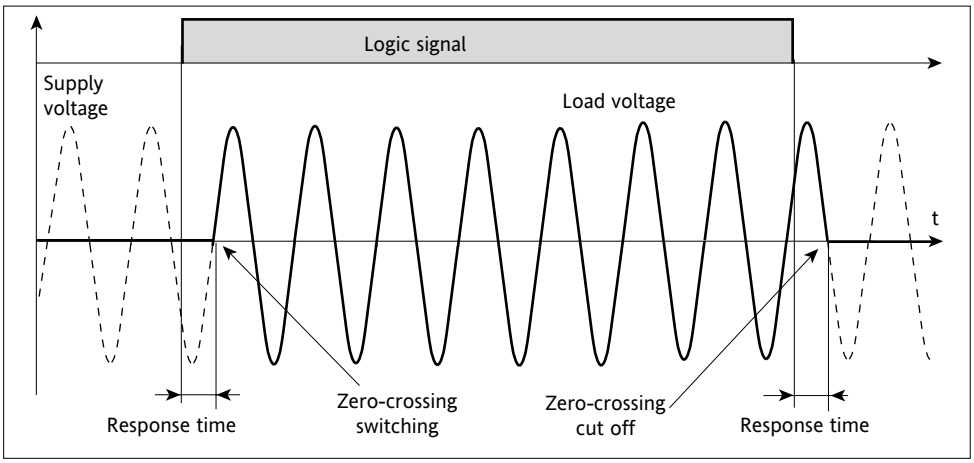

Figure 3-1 Thyristor firing in ‘Logic’ mode

Thyristor firing:
- is **enabled** when the input signal is greater than or equal to the ‘**On**’ value.
- is **disabled** when the input signal is less than the ‘**Off**’ value.

Logic input type	Code	Terminal labels	On	Off	Max. voltage
Low level DC	LDC	0VL, LD	4.5 Vdc	1.5 Vdc	32 Vdc
High level AC	HAC	A1, A2	85 Vac	10 Vac	253 Vac

Table 3-1 Logic input parameters

Important: 7100S solid state contactors with the digital communication option gradually vary the power transmitted to the load in ‘Burst mode’ (IHC, FC1, C16, C64) depending on the digital setpoint.

ATP ANALOGUE SIGNAL (‘Burst’ mode)

When an analogue signal (**4 - 20 mA**) is applied to the **ATP** input (or Digital communication is used) the 7100S series unit operates in ‘**Burst mode**’.
‘Burst mode’ firing is a **proportional cycle** which delivers a series of complete half-cycles to the load.

Thyristor firing and cut-off is synchronised with the supply and occurs at **zero crossing**.

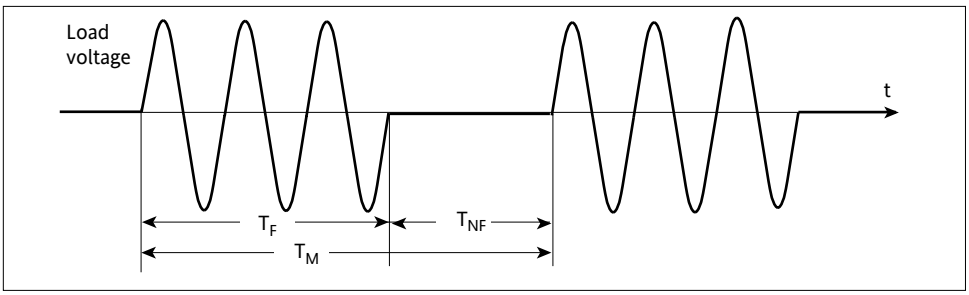

Figure 3-2 Thyristor firing in ‘Burst mode’

Thyristor firing in ‘Burst mode’ can be described by the firing time (**T_F**) , non-firing time (**T_{NF}**) and modulation time (**T_M**) where **$T_M = T_F + T_{NF}$**

Firing in ‘Burst mode’ is defined by the **Base Cycle Time** (**T_B**).
The base cycle time is equal to the **firing time** at **50%** power.
The base time for 7100S units with an ATP input is:

$$T_B = 0.3 \text{ s} \pm 20\%$$

giving a modulation time of **$T_M = 0.6$ s ± 20%.**

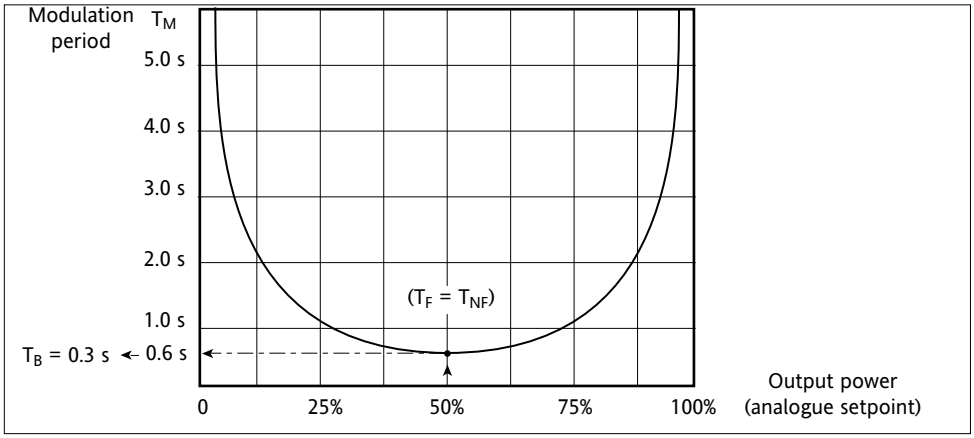

Figure 3-3 ‘Burst mode’ modulation period depending on analogue signal (ATP input)

7100S units with an **ATP** input use **open loop** control and thus do not compensate for supply variations.

The **power** dissipated in the load is **proportional** to the analogue signal on the **ATP** input between 4% and 96% of the full range of the 4-20 mA signal.

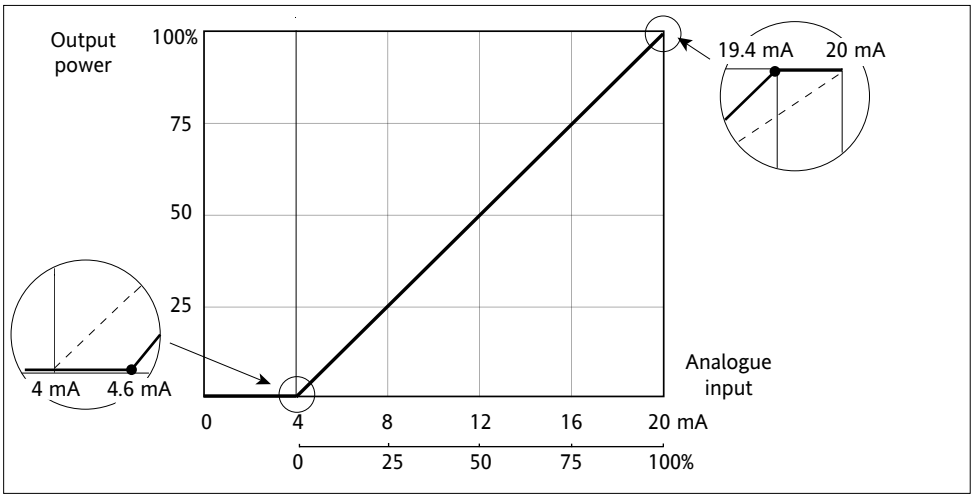

Figure 3-4 Input / Output transfer graph for ATP input

INDICATORS (green LEDs)

Two green LEDs ('**ON**' and '**HEAT**') are included on the front panel in all 7100S units.

LED labelling	LED states	Diagnostic
ON	On	Supply present
	Off	Supply cut or fuse blown
HEAT 'Logic' firing or	On or Flashing	Firing request. Thyristors firing if: Green 'ON' LED and no TLF alarm.
HEAT 'Burst mode' firing	Off ('ON' LED on)	No signal or Over-temperature alarm

Table 3-2 Indicator LED diagnosis

Important! With the digital communication option, the transmission status is indicated by the green '**ON/Dxch**' LED, as described in the Communication manual.

ALARMS (Options)

SAFETY MECHANISMS

7100S units have alarms to protect the thyristors and the load against certain types of abnormal operation and provide the user with information about the type of fault.

Danger!

- Alarms are not under any circumstances a replacement for personnel protection.
- The user is responsible for installing independent safety mechanisms which must be inspected regularly. Given the value of the equipment controlled by the 7100S, this is strongly recommended.
  Eurotherm can supply various types of suitable alarm detector.

ALARM STRATEGY

- **ALARMS DETECTED**
  The alarms below are optionally available on 7100S series units .

  With the '**GRF**' ('**GR**oss **F**aults' or **serious alarms**) option the following faults are detected and signalled:
  - Thyristor short-circuit
  - Total load failure
  - Thyristor over-temperature (only on fan-cooled units with ratings of 250 A or higher).

  With the '**DLF**' option (**D**iagnostic **L**oad **F**ailure fault) the following faults are monitored:
  - Partial load failure (diagnosis of load condition and detection status).
  - All serious faults (as with the GRF option).

- **FIRING INHIBIT**
  A single 'Over-temperature' alarm (only for ratings of **250 A** or higher) **inhibits** thyristor firing (even if the control signal is present).

- **ALARM SIGNALLING**
  All faults detected are **signalled** as follows:
  - the alarm relay **contact** is activated
  - the corresponding **LEDs** on the front panel of the 7100S solid state contactor are lit.

  Over-temperature is signalled if one of the alarm options is fitted.

- **MEMORISATION / RESET**
  Alarms are not memorised. The 'Partial load failure' alarm may be temporarily inhibited by pressing the 'CHK/SET' push button.

- **ALARM RELAY**
  All alarms change the position of the Alarm relay **contact**.
  Depending on the product code this contact may be:
  - open on alarm (code **NO**) or
  - closed on alarm (code **NC**).

  The alarm contact switching capacity is **0.25 A** (230 Vac or 32 Vdc).

GRF OPTION

SERIOUS ALARMS

With the **Serious alarms** option the following faults are monitored:

- Total Load Failure, **TLF**
- Thyristor Short Circuit, **THSC**
- Thyristor over-temperature, **T°**
  (only for fan-cooled units with current rating of **250 A or higher**).

Important: The **GRF** option (detection of Serious alarms) is automatically **included** with the **DLF** option.

SIGNALLING SERIOUS ALARMS

When a serious alarm is detected:

- the corresponding **LED** on the front panel is lit
- the alarm relay **contact** is activated.

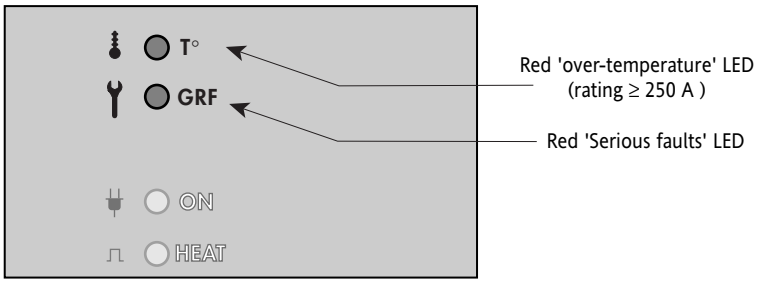

Figure 3-5 Layout of front panel LEDs with 'GRF' option

Fault	LED states			Firing stopped	Typical reaction time
	'T°' red	'GRF' red	'HEAT' green		
Total Load Failure (TLF) or Thyristor short-circuit (THSC)	Off	On	On or Flashing	No	2 s to 5 s
Over-temperature (≥ 250 A) (T°)	On	Off	Off *	Yes	

Table3-3 LEDs for serious alarms with 'GRF' option

* even if the control signal is present.

The indicators for serious alarms detected return to normal (LEDs and relays in non-alarm position) after the fault condition ceases.

DLF OPTION (Load failure diagnostic alarm)

FUNCTIONS OF THE DLF OPTION

The **DLF** option monitors and diagnoses **P**artial **L**oad **F**ailures (**PLF**) and serious faults (as for the GRF option).

PLF fault detection is automatically adjusted using the '**CHK/SET**' push button.
This button can also be used to disable DLF alarm monitoring and temporarily prevent PLF faults from being signalled.

SIGNALLING ALARMS WITH DLF OPTION

When a fault (**PLF**, **TLF**, **THSC** or **T°**) is detected, this is signalled by the alarm relay **contact** and the corresponding front panel **LED**.

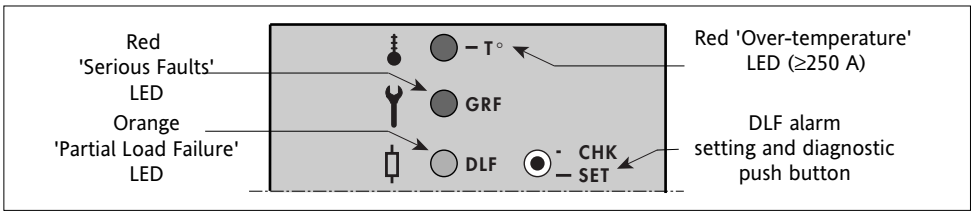

Figure 3-6 Layout of front panel LEDs with 'DLF' option

Fault	LED states				Firing stopped	Typical reaction time
	'T°' red	'GRF' red	'DLF' orange	'HEAT' green		
Partial load failure (PLF)	Off	Off	Flashing	On or Flashing	No	1 s to 10 s
Total load failure (TLF)	Off	On	Flashing			
Thyristor short-circuit (THSC)	Off	On	Off			
Over-temp. (T°)	On	Off	Off	Off *	Yes	

Table 3-4 LEDs for faults with DLF' option

* even if the control signal is present.

The indicators for alarms detected return to **normal** (LEDs and relay contacts in non-alarm position) after the fault condition ceases.

Important!

- With the DLF option, the '**DLF**' LED is used to **distinguish** between **TLF** and **THSC** faults.
- The red '**T°**' LED is only fitted for fan-cooled units (rating **250 A** or higher) fitted with the DLF or GRF **alarm option**.

LOAD TYPE MATCHING

PLF detection is adapted to the load type.
The type of load controlled is selected when ordering, with the product code:
- **LTCL** (**L**ow **T**emperature **C**oefficient **L**oad), or
- **SWIR** (**S**hort **W**ave **I**nfra**R**ed elements).

REMINDER OF POSSIBLE FIRING MODES

'Logic' firing mode
Solid state contactor firing follows the logic signal applied to the LDC or HAC input.

'Burst mode' firing (code C16 or C64)
The 7100S may be operated in 'Burst mode' firing controlled by the following:
- 4-20 mA analogue signal applied to the ATP input (TB = 0.3 s ± 20%; code C16)
- Eurotherm i7000 or REMIO/TPO interfaces (LDC input)
- the built-in 'Digital communication' option (COM input).

'Single-cycle' (code FC1) or 'Intelligent half-cycle' (code IHC) firing mode
These firing modes are available with the following control inputs:
- **synchronised i7000** or **REMIO** interfaces (with **24 Vac** power supply)
- **synchronised** 'Digital communication' option (with **24 Vac** power supply).

Important!

The DLF alarm **only** operates correctly for **short wave infrared** elements powered at their nominal voltage, not for fast medium infrared elements.

CORRECT OPERATING CONDITIONS

The table below lists the conditions (depending on load type) for controlling 7100S solid state contactors with different input signal types.

Input signal	Code **LTCL** Detection of 1 failed element of 6 elements in parallel	Code **SWIR** Detection of 1 failed element of 4 elements in parallel
PLC	Modulation time ≥ 1.5 s	Not applicable.
Controller (Eurotherm series 2000 or 3000)	Firing time ≥ 0.15 s and non-firing time ≥ 0.15 s	Not applicable.
Eurotherm REMIO or i7000 interface	No restrictions	'Intelligent half-cycle' firing (code IHC) only
Integrated digital communication	No restrictions	'Single-cycle' (FC1) or 'Intelligent half-cycle' (IHC) firing only
ATP Option	No restrictions	Not applicable.

Table 3-5 Summary of correct operating conditions for 'DLF' alarm

AUTOMATIC DLF ALARM ADJUSTMENT

Adjusting PLF detection involves calculating and storing the value of the reference impedance from the measured rms current and voltage values.

This can be set using the '**CHK/SET**' push button on the front panel. The setting should preferably be adjusted when the heating elements are at their **nominal temperature**.

Conditions for setting the DLF alarm

The PLF detection setting can only be adjusted (reference impedance recalculated) in the following conditions:

- rms load voltage greater than **40%** of the nominal voltage
- rms load current greater than **30%** of the rated current
- no over-temperature or thyristor short-circuit faults.

Memorising the DLF alarm settings

The DLF settings are memorised even if the power is cut.

PARTIAL LOAD FAILURE DETECTION CONDITIONS

PLF monitoring involves **comparing** the load impedance with a reference impedance stored during setting in order to detect any increase in load impedance.

The load impedance is calculated from the rms voltage and current values measured continuously.

PLF **detection** is only possible under the following **conditions**:

- rms load voltage greater than **40%** of the nominal voltage, and
- rms load current greater than **5%** of the rated current.

PARTIAL LOAD FAILURE DETECTION SENSITIVITY

Partial load failure detection sensitivity can be expressed in terms of a **maximum number** of load elements connected in parallel for which the unit can detect the failure of one element.

The DLF diagnostic alarm **guarantees** that failure will be detected for:

- **ONE** failed element of **SIX** identical elements connected in parallel (load with code **LTCL**)
- **ONE** failed element of **FOUR** identical elements connected in parallel (load with code **SWIR**).

ALARM CONFIRMATION

PLF fault signalling ('DLF' indicator and relay) can be temporarily **excluded** from alarms, in order to check that the alarm is genuine, by pressing the '**CHK/SET**' push button.

If the fault persists, DLF signalling returns to the alarm position.

FUNCTIONS OF DLF ALARM PUSH BUTTON

The push button on the front panel of the unit with the '**DLF**' option is labelled '**CHK / SET**' ('Checking / Setting').

Pushing this push button as shown on the timing diagrams below sets and diagnoses the status of the PLF detection circuit.

Setting request

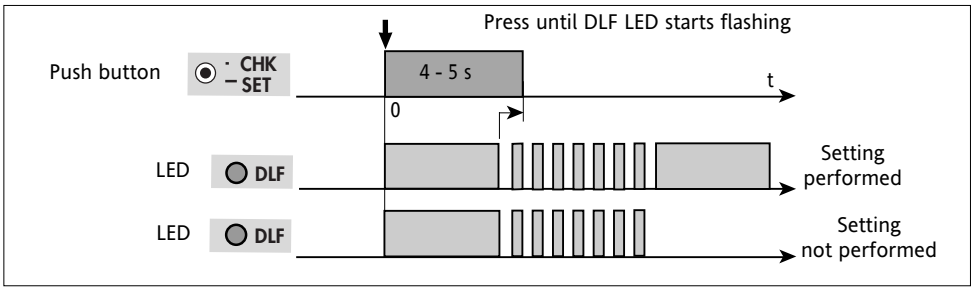

Figure 3-7a PLF detection setting request

DIAGNOSTIC

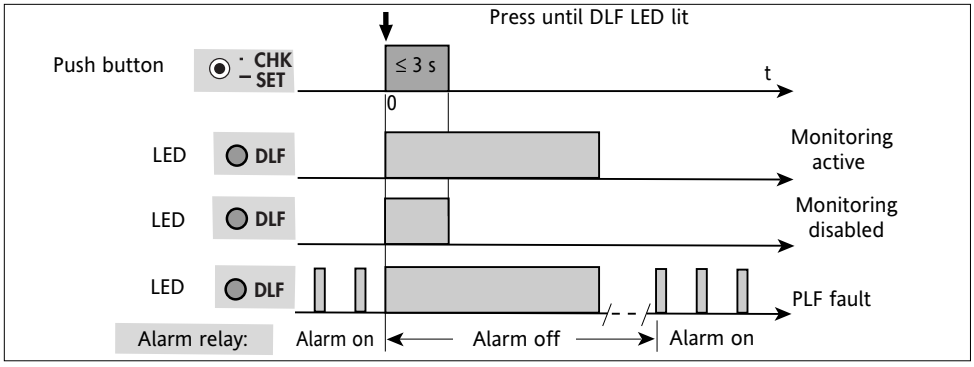

Figure 3-7b PLF monitoring diagnosis

DISABLING

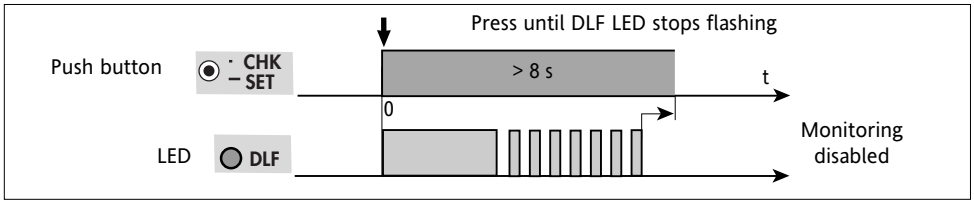

Figure 3-7c Disabling PLF monitoring

ALARM DIAGNOSTIC SUMMARY

The table below summarises all status LED information needed to **diagnose faults.**

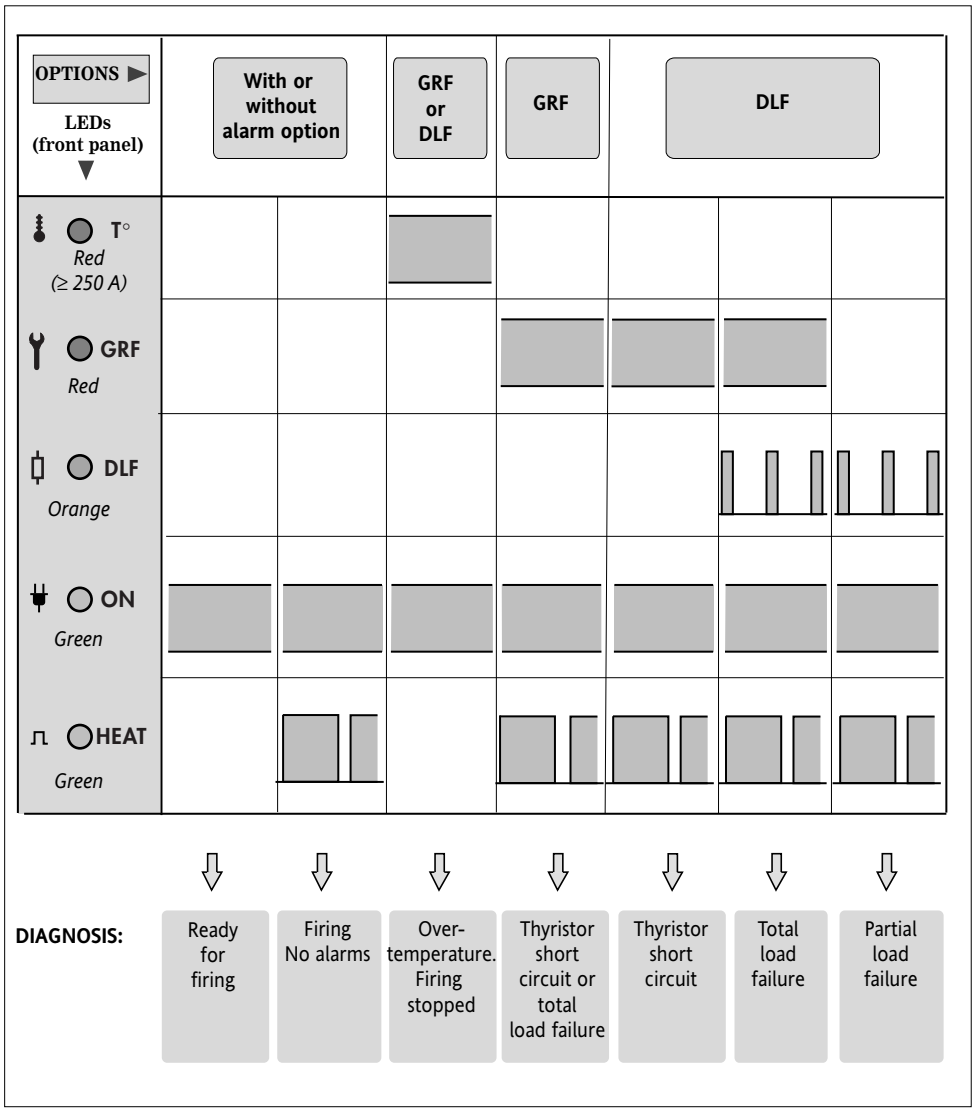

Figure 3-8 Diagnosing operation and alarms according to status of front panel LEDs

ANALOGUE RETRANSMISSION (Option)

AVAILABILITY

With the 'Analogue retransmission' option (code **RTR**), 7100S units have an isolated output (terminals **0V1** and **DC1**) which transmits an analogue image of the rms load current.

Important!
Analogue retransmission is available with the **RTR** option provided the **DLF** option is fitted, though not if the integrated digital communication option is selected.

RETRANSMITTED VALUE

RETRANSMISSION SIGNAL

The rms load current is transmitted as a DC signal, either current or voltage as selected on ordering:

- current (**4 - 20 mA**, Vmax = 12.5 V on a 500 Ω impedance) **or**
- voltage, (**0 - 10 V**, Imax = 24 mA on a 500 Ω impedance)

Output scale: **0 to 125%** of the unit's nominal current, giving the following output range:

- **4 to 24 mA** for the current signal
- **0 to 12.5 V** for the voltage signal.

100% of the unit's nominal current corresponds to **10 V** (voltage signal) or **20 mA** (current signal).

Typical precision relative to full scale: ±2.5%.

Figure 3-9 Front panel labels relating to retransmission option (terminal DC1 is positive)

DETERMINING THE RMS CURRENT

The rms current value is calculated over an **integration period** which depends on the firing mode and the control signal input.

- **ATP** analogue input ('**Burst mode**' firing):
  the integration period is equal to the 7100S's modulation period.
- All **other** inputs (**LDC**, **HAC** or Digital communication **COM**):
  the integration period is set at 1.6 seconds.

The rms current signalled will be **stable** (**±2.5%** of full scale) for modulation times up to **0.15 s**.

POWER SUPPLIES

External power supply: **24 Vac ±20%** or **24 Vdc ±20%** non-polarised ('Aux2' terminal block).
Consumption: max. 2 VA.

Chapter 4

COMMISSIONING AND MAINTENANCE

Contents Page

Chapter 4 COMMISSIONING AND MAINTENANCE

SAFETY DURING COMMISSIONING AND MAINTENANCE

Please read carefully before commissioning the unit

Important!

- Eurotherm shall not be held responsible for any damage, injury, losses or expenses incurred by inappropriate use of the product or failure to comply with this manual.
- Accordingly the user is responsible for checking, before commissioning the unit, that all the nominal characteristics correspond to the conditions under which it is to be installed and used.

Danger!

- The product must be commissioned and maintained by qualified personnel, authorised to work in an industrial low voltage environment. Users must not attempt to access internal parts. The heatsink temperature may exceed 100°C. The heatsink remains hot for approx. 15 minutes after the unit is shut down. Avoid touching the heatsink even briefly while the unit is operating.

COMMISSIONING

CHECKING THE CHARACTERISTICS

Before powering up the unit, check that the **identification code** corresponds to the code specified on the order and that the characteristics are **compatible** with the facility.

Load current

The maximum load current must be less than or equal to the nominal current value of the solid state contactor, taking account of supply and load variations.

Supply voltage

The nominal voltage value must be greater than or equal to the line-to-line or line-to-neutral supply voltage (depending on the connection scheme).

Never use the unit on a supply with a voltage greater than the nominal value +10% as this could damage the protection components or even the thryistors.

Input signal

The signal type is factory configured depending on the option ordered. Check that the signal used corresponds to the input type indicated on the front panel of the unit (LDC, HAC or ATP).

Load type (DLF option)

For correct operation of the partial load failure detection system, ensures that load type used corresponds to the product code (**LTCL** or **SWIR**).

CHECKING THE WIRING

Cut-off and isolation systems

It is the user's responsibility to wire and protect the facility according to best practice and applicable standards.

Danger!

A suitable device ensuring that the unit can be electrically isolated from the supply must be installed upline to enable work to be performed safely.

Protective earth, power and control connections

- Before checking the wiring, ensure that the power and control wires are **isolated** from power sources.
- Check that the **protective earth** cable is connected to the earth terminal on the unit.
- Check that the **wiring** corresponds to the connection diagram (figure 2-6 for ratings of up to 100 A and figure 2-7 for ratings of 125 A and above).
- for ratings of 125 A or more, check that the **reference voltage** is connected to terminal **L2** on the **EXT** terminal block (figure 2-7).
- For fan-cooled units (250 A and above) check the **fan** power supply (voltage, connections and fuse).
- Check the **polarity** of DC input signals (code **LDC** or **ATP**) (see figure 2-8).

POWER UP

Power and auxiliary voltages and input signal

- Check that there is no input signal then power up the unit.
  Check that theere is no current in the load.
- Check the auxiliary voltage for **RTR** or **COM** options (**Aux2** terminal block).
- Apply the logic signal (**LDC** or **HAC** inputs) for a short period or the analogue signal with a low value (**ATP** input) and check that the load current appears and the '**HEAT**' LED is lit during firing.
- Apply the necessary input signal.

Adjust the partial load failure detection setting (DLF option).

- Check that the DLF alarm operating conditions are correct (page 3- 8) and that the load failure detection conditions are met (page 3-9).
- The partial load failure detection settings are adjusted with the **push button** on the front panel of units fitted with the DLF option. The procedure and conditions for this setting are described the 'DLF option' section on page 3-9.

MAINTENANCE

- Every six months, check that the power and protective earth cables are correctly **tightened** (see 'Wiring' section, page 2-7).
- If the load parameters **change**, the operation of the PLF detection must be diagnosed (see 'DLF option' section).
- If a **DLF alarm** occurs, check the load wiring and condition of contacts.
  Use the push button to **confirm** the DLF alarm **diagnosis** (see page 3-10).
- To ensure that the unit is cooled correctly, the heatsink should be **cleaned** regularly, depending on how dirty the environment is, as should the fan protection grille for fan-cooled units rated at 125 A or more.

Danger!

Power down the unit before cleaning and allow 15 minutes for it to cool down.

Thyristor protection fuses

A **high speed fuse** protects the thryistors in the 7100S unit against excessive current

For current ratings up to **100 A** the fuses are **external**.
For current ratings of **125 A** and above the fuses are **internal**, located in a special compartment, under a cover held by two captive screws.

Danger!

High-speed fuses **do not** provide protection for the installation. Upline protection must be fitted (non-high-speed fuses, circuit breakers).

If the 'Fuse' field of the product code is '**NONE**' (i.e. the user did not order a thyristor protection fuse or the load comprises short wave infrared elements), the fuse is **not supplied** (ratings **16 A** to **100 A**) or is **not installed** inside the unit (ratings 125 A and over).

Important!

For all loads (other than short wave infrared elements), using a thyristor protection fuse **other** than the recommended fuses listed in the tables below **voids** the product guarantee.

EXTERNAL FUSES (up to 100 A)

An **external** high speed fuse protects the thyristors in 7100S units with a current rating of 16 A to 100 A.

The product code indicates whether a fuse is included in the unit ordered and the type of fuse.

With the **FUSE** or **MSFU** (**M**icro **S**witch **FU**se) codes, a fuse and fuse holder assembly (corresponding to the current rating) is supplied with the product.

- **FUSE** code: the fuse does not have a fuse blown striker bar
- **MSFU** code: the fuse has a striker bar and the fuse holder is fitted with a blown fuse microswitch to be connected by the customer.

Rating (A)	Fuse reference	External fuse and fuse-holder assembly	
		Reference	Dimensions (mm) H × W × D
16	CH260024	FU1038/16A	81 × 26.5 × 94
25	CH260034	FU1038/25A	81 × 26.5 × 94
40	CH330054	FU1451/40A	97 × 26.5 × 86
63	CS173087U080	FU2258/63A	128 × 35 × 90
80	CS173087U100	FU2258/80A	128 × 35 × 90
100	CS173246U125	FU2760/100A	240 × 38 × 107

Table 4-1 External fuses without microswitch, recommended for ratings 16 A to 100 A (code FUSE)

Rating (A)	Fuse reference with striker bar	Fuse and fuse holder assembly with microswitch	
		Reference	Dimensions (mm) H × W × D
16	CS176513U020	MSFU1451/16A	110 × 26.5 × 94
25	CS176513U032	MSFU1451/25A	110 × 26.5 × 94
40	CS176513U050	MSFU1451/40A	110 × 26.5 × 94
63	CS176461U080	MSFU2258/63A	127.5 × 35 × 96.5
80	CS176461U100	MSFU2258/80A	127.5 × 35 × 96.5
100	CS173246U125	MSFU2760/100A	240 × 53 × 107

Table 4-2 Fuses with microswitch, recommended for ratings 16 A to 100 A (code MSFU)

INTERNAL FUSES (125 A to 250 A)

7100S units with ratings of **125 A** or above are fitted with an **internal** thryistor protection fuse.

The product code indicates whether the unit has an internal fuse and whether a fuse blown contact is fitted.

- With code **FUSE** the fuse is installed in a special compartment (see figure 2-7).
- With code **MSFU** the fuse is fitted with a fuse blown microswitch.

This microswitch is connected to the '**MSF**' terminal block (terminals **3a** and **3b**).
By default the microswitch is open when the fuse is blown.

Rating (A)	Fuse referece (with or without microswitch installed)
125	CS176762U160
160	CS176762U200
200	CS176762U250
250	CS176762U315

Table 4-3 Internal fuses, recommended for ratings of 125 A and above (code FUSE or MSFU)

INDEX

EUROTHERM

For over thirty years **Eurotherm Limited** have been providing an unparalleled level of service and expertise to customers in the control of Processes and Power.

From requirement assessment, through to equipment specification and plant commissioning.

Eurotherm Limited is able to offer expertise and equipment in the following areas:

- Input conditioning
- Process and Temperature Indicators
- Single Loop Process and Temperature Controllers with Programming facilities
- Programmable Multi loop Process Controllers
- Solid State Contactors
- Power Controllers
- Paper and Paperless Data Recorders
- Data Acquisition and Management Instrumentation
- Supervisory Systems (SCADA)
- Process Automation Systems

Eurotherm Limited is part of **Invensys plc**, one of the world's leading automation and controls companies.

Eurotherm manufactures at a number of locations in Europe and the USA, and is a major supplier to the world's processing and manufacturing industries.

The company is ISO9000 approved and operates TickIT protocols for software management.

Please contact your local **Sales Office**.

EUROTHERM WORLDWIDE SALES AND SERVICE

AUSTRALIA
Eurotherm Pty. Ltd.
Tel Sydney (+61 2) 9634 8444
Fax (+61 2) 9634 8555
Web : www.eurotherm.com.au

AUSTRIA
Eurotherm GmbH
Tel Vienna (+43 1) 798 7601
Fax (+43 1) 798 7605
Web : www.eurotherm.at

BELGIUM
Eurotherm S.A/N.V.
Tel Moha (+32 0) 85 274080
Fax (+32 0) 85 274081
WEB: www.eurotherm.co.uk

DENMARK
Eurotherm A/S
Tel Frederiksberg (+45 38) 871 622
Fax (+45 38) 872 124

FRANCE
Eurotherm Automation SAS
Tel Lyon (+33) 4 78 66 45 00
Fax (+33) 4 78 35 24 90
WEB: ww.eurotherm.tm.fr

GERMANY
Eurotherm Regler GmbH
Tel Limbourg (+49 6431) 2980
Fax (+49 6431) 298119
WEB: www.eurotherm-deutschland.de

HONG KONG
Eurotherm Limited
Tel Hong Kong (+852) 2873 3826
Fax (+852) 2870 0148

INDIA
Eurotherm India Limited
Tel Madras (+9144) 4928129
Fax (+9144) 4928131

IRELAND
Eurotherm Ireland Limited
Tel Naas (+353 45) 879937
Fax (+353 45) 875123

ITALY
Eurotherm SpA
Tel Guanzate (+39 31) 975111
Fax (+39 31) 977512
WEB: www.eurotherm.it

JAPAN
Densei-Lambda KK Eurotherm.
Tel Tokyo (+81 3) 5714 0620
Fax (+81 3) 5714 0621
Web : www.nemic.co.jp

KOREA
Eurotherm Korea Limited
Tel (+82) 31 286 8507
Fax (+82) 31 287 8508

NETHERLANDS
Eurotherm B.V.
Tel Alphen aan den Rijn (+31 172) 411 752
Fax (+31 172) 417 260
WEB:www.eurotherm.nl

NORWAY
Eurotherm A/S
Tel Lysacer (+47) 67 - 59 21 70
Fax (+47) 67 - 11 83 01

SPAIN
Eurotherm España SA
Tel Madrid (+34 91) 6616001
Fax (+34 91) 6619093
WEB: www.eurotherm.es

SWEDEN
Eurotherm AB
Tel Malmo (+46 40) 384500
Fax (+46 40) 384545
WEB: www.eurotherm.se

SWITZERLAND
Eurotherm Produkte AG
Tel Freienbach(+41 055) 4154400
Fax (+41 055) 4154415
Web : www.eurotherm.ch

UNITED KINGDOM
Eurotherm Limited.
Tel. Worthing (+44 1903) 695888
Fax(+44 1903) 695666
WEB:www.eurotherm.co.uk

U.S.A.
Eurotherm Controls Inc.
Tel Leesburg, (+1703) 443-0000
Fax (+1703) 669-1300
WEB: www.eurotherm.com

http://www.eurotherm.co.uk

Eurotherm is part of **Invensys plc**

ENG

Manufactured by Eurotherm Automation SAS

HA176386ENG

7100s User Manual Part No : HA 176386 ENG