efesotomasyon - telemecanique inverter

Altivar 312

Variable speed drives for asynchronous motors

Programming manual

06/2010

efesotomasyon.com

BBV46385

www.schneider-electric.com

Schneider Electric

Contents

efesotomasyon.com

Important information 4
Before you begin 5
Documentation structure 7
Software enhancements 8
Steps for setting up the drive 9
Setup - Preliminary Recommendations 10
Factory configuration 11
Basic functions 12
Remote display terminal option, ATV31 14
Remote graphic display terminal option, ATV61/ATV71 15
Remote display terminal option, ATV12 19
Structure of the parameter tables 20
Compatibility of functions 21
List of functions that can be assigned to inputs/outputs 23
List of functions that can be assigned to the Network and Modbus control word bits 25
Checklist 26
Programming 27
[SPEED REFERENCE] (rEF-) menu 31
[SETTINGS] (SEt-) menu 32
[MOTOR CONTROL] (drC-) menu 41
[INPUTS / OUTPUTS CFG] (I-O-) menu 47
[COMMAND] (CtL-) menu 50
[COMMAND] (CtL-) menu 61
[APPLICATION FUNCT.] (FUn-) menu 62
[FAULT MANAGEMENT] (FLt-) menu 91
[COMMUNICATION] (COM-) menu 98
[MONITORING] (SUP-) menu 100
Migration ATV31 - ATV312 105
Diagnostics and troubleshooting 106
Index of functions 111
Index of parameter codes and customer settings 112

Important information

NOTICE

Read these instructions carefully, and look at the equipment to become familiar with the device before trying to install, operate, or maintain it. The following special messages may appear throughout this documentation or on the equipment to warn of potential hazards or to call attention to information that clarifies or simplifies a procedure.

The addition of this symbol to a Danger or Warning safety label indicates that an electrical hazard exists, which will result in personal injury if the instructions are not followed.

This is the safety alert symbol. It is used to alert you to potential personal injury hazards. Obey all safety messages that follow this symbol to avoid possible injury or death.

DANGER

DANGER indicates an imminently hazardous situation which, if not avoided, will result in death, serious injury or equipment damage.

WARNING

WARNING indicates a potentially hazardous situation which, if not avoided, can result in death, serious injury or equipment damage.

CAUTION

CAUTION indicates a potentially hazardous situation which, if not avoided, can result in injury or equipment damage.

CAUTION

CAUTION, used without the safety alert symbol, indicates a potentially hazardous situation which, if not avoided, can result in equipment damage.

PLEASE NOTE

The word "drive" as used in this manual refers to the "controller portion" of the adjustable speed drive as defined by NEC.

Electrical equipment should be installed, operated, serviced, and maintained only by qualified personnel. No responsibility is assumed by Schneider Electric for any consequences arising out of the use of this documentation.

© 2009 Schneider Electric. All rights reserved.

Before you begin

Read and understand these instructions before performing any procedure with this drive.

⚠ ⚠ DANGER

HAZARD OF ELECTRIC SHOCK, EXPLOSION, OR ARC FLASH

- Read and understand this manual before installing or operating the Altivar 312 drive. Installation, adjustment, repair, and maintenance must be performed by qualified personnel.
- The user is responsible for compliance with all international and national electrical code requirements with respect to grounding of all equipment.
- Many parts of this drive, including the printed circuit boards, operate at the line voltage. DO NOT TOUCH. Use only electrically insulated tools.
- DO NOT touch unshielded components or terminal strip screw connections with voltage present.
- DO NOT short across terminals PA/+ and PC/– or across the DC bus capacitors.
- Before repairing the variable speed drive:
  - Disconnect all power, including external control power that may be present.
  - Place a “DO NOT TURN ON” label on all power disconnects.
  - Lock all power disconnects in the open position.
  - WAIT 15 MINUTES to allow the DC bus capacitors to discharge.
  - Measure the voltage of the DC bus between the PA/+ and PC/– terminals to ensure that the voltage is less than 42 Vdc.
  - If the DC bus capacitors do not discharge completely, contact your local Schneider Electric representative. Do not repair or operate the drive
- Install and close all covers before applying power or starting and stopping the drive.

Failure to follow these instructions will result in death or serious injury.

⚠ DANGER

UNINTENDED EQUIPMENT OPERATION

- Read and understand this manual before installing or operating the Altivar 312 drive.
- Any changes made to the parameter settings must be performed by qualified personnel.

Failure to follow these instructions will result in death or serious injury.

⚠ WARNING

DAMAGED EQUIPMENT

Do not install or operate any drive that appears damaged.

Failure to follow these instructions can result in death, serious injury, or equipment damage.

Before you begin

WARNING

LOSS OF CONTROL

- The designer of any wiring diagram must take account of potential control channel failure modes and, for certain critical control functions, incorporate a way of achieving a safe state during and after a channel failure. Examples of critical control functions are emergency stop and overtravel stop.
- Separate or redundant control channels must be provided for critical control functions.
- System control paths may include communication links. Consideration must be given to the implications of unanticipated transmission delays or failures of the link. [a]

Failure to follow these instructions can result in death, serious injury, or equipment damage.

a) For additional information, refer to NEMA ICS 1.1 (latest edition), "Safety Guidelines for the Application, Installation, and Maintenance of Solid State Control" and to NEMA ICS 7.1 (latest edition), "Safety Standards for Construction and Guide for Selection, Installation and Operation of Adjustable-Speed Drive Systems".

Documentation structure

The following Altivar 312 technical documents are available on the Schneider Electric website (www.schneider-electric.com) as well as on the DVD-ROM (reference VW3A8200).

Installation Manual

This manual describes how to install and connect the drive.

Programming manual

This manual describes the functions and parameters of the drive's terminals and how to use them.

Quick Start

This document describes how to connect and configure the drive so that the motor can be started both quickly and easily for basic applications. This document is supplied with the drive.

Manuals for Modbus, CANopen, etc.

These manuals describe the installation process, the bus or network connections, signaling, diagnostics and the configuration of parameters specific to communication.
They also describe the communication services of the protocols.

Software enhancements

Since it was first marketed, the Altivar ATV 312 has been equipped with additional functions. Software version V5.1 IE 50 has now been updatedto V5.1 IE 54. This documentation relates to version V5.1 IE 54.
The software version appears on the rating plate attached to the side of the drive.

Enhancements made to version V5.1 IE 54 in comparison to V5.1 IE 50

New possible configuration

- Remote configuration : By pressing the MODE button during 3 seconds, the drive switches automatically to Remote configuration. The embedded Jog Dial works as a potentiometer (Fr1 = AIV1) and embedded RUN button is activated.

- Local configuration : It is possible to go back to Local configuration by pressing again the MODE button during 3 seconds (see page 28)

efesotomasyon.com

Steps for setting up the drive

INSTALLATION

1. Please refer to the Installation Manual.

PROGRAMMING

2. Apply input power to the drive, but do not give a run command.

3. Configure:

- **The nominal frequency of the motor [Standard mot. freq] (bFr) page 41 if this is not 50 Hz,**
- **The motor parameters in the [MOTOR CONTROL] (drC-) menu, page 41, only if the factory configuration of the drive is not suitable,**
- **The application functions in the [INPUTS / OUTPUTS CFG] (I-O-) menu, page 47, the [COMMAND] (CtL-) menu, page 50, and the [APPLICATION FUNCT.] (FUn-) menu, page 62, only if the factory configuration of the drive is not suitable.**

4. In the [SETTINGS] (SEt-) menu, adjust the following parameters:

- **[Acceleration] (ACC), page 32 and [Deceleration], (dEC) page 32,**
- **[Low speed] (LSP), page 33 and [High speed] (HSP), page 33,**
- **[Mot. therm. current] (ItH), page 33.**

5. Start the drive.

Tips:

- Before beginning programming, complete the customer setting tables, page 112.
- Use the [Restore config.] (FCS) parameter, page 46, to return to the factory settings at any time.
- To locate the description of a function quickly, use the index of functions on page 111.
- Before configuring a function, read carefully the "Function compatibility" section on pages 21 and 22.
- **Note:**
  The following operations must be performed for optimum drive performance in terms of accuracy and response time:
  - Enter the values indicated on the (motor) rating plate in the [MOTOR CONTROL] (drC-) menu, page 41.
  - Perform auto-tuning with the motor cold and connected using the [Auto-tuning] (tun) parameter, page 43.
  - Adjust the [FreqLoopGain] (FLG) parameter, page 33 and the [Fr.Loop.Stab] (StA) parameter, page 34.

Setup - Preliminary Recommendations

Before powering up the drive

⚠ DANGER

UNINTENDED EQUIPMENT OPERATION

Make sure that all logic inputs are inactive to avoid any unintended operation.

Failure to follow these instructions will result in death or serious injury.

Before configuring the drive

⚠ DANGER

UNINTENDED EQUIPMENT OPERATION

- Read and understand this manual before installing or operating the ATV312 drive.
- Any changes made to the parameter settings must be performed by qualified personnel.
- Make sure that all logic inputs are inactive to avoid any unintended operation when parameters are being changed.

Failure to follow these instructions will result in death or serious injury.

Start-up

Note: When factory settings apply and during power-up/manual reset or after a stop command, the motor can only be powered once the "forward", "reverse" and "DC injection stop" commands have been reset. If they have not been reset, the drive will display [Freewheel stop] (nSt) but will not start. If the automatic restart function has been configured ([Automatic restart] (Atr) parameter in the [FAULT MANAGEMENT] (FLt-) menu, page 91), these commands are taken into account without a reset (to zero) being necessary.

Line contactor

CAUTION

RISK OF DAMAGE TO DRIVE

- Frequent use of the contactor will cause premature ageing of the filter capacitors.
- Do not have cycle times less than 60 seconds.

Failure to follow these instructions can result in equipment damage.

Using a motor with a lower rating or dispensing with a motor altogether

- With the factory settings, motor output phase loss detection is active ([Output Phase Loss] (OPL) = [YES] (YES), page 94). To avoid having to use a motor with the same rating as the drive when testing the drive or during a maintenance phase, deactivate motor output phase loss detection ([Output Phase Loss] (OPL) = [No] (nO)). This can prove particularly useful if very powerful drives are being used.
- Set the [U/F mot 1 selected] (UFt) parameter, page 44, on [Cst. torque] (L) in the [MOTOR CONTROL] (drC-) menu.

CAUTION

RISK OF DAMAGE TO MOTOR

Motor thermal protection will not be provided by the drive if the motor 's nominal current is 20% lower than that of the drive. Find an alternative source of thermal protection.

Failure to follow these instructions can result in equipment damage.

Factory configuration

efesotomasyon.com

Factory settings

The Altivar 312 is factory-set for the most common operating conditions:

- Display: drive ready [Ready] (rdY) with motor stopped, and motor frequency with motor running.
- The LI5 and LI6 and logic inputs, AI3 analog input, AOC analog output, and R2 relay are unaffected.
- Stop mode when fault detected: freewheel

Code	Description	Value	Page
bFr	[Standard mot. freq]	[50Hz IEC]	41
tCC	[2/3 wire control]	[2 wire] (2C): 2-wire control	30
UFt	[U/F mot 1 selected]	[SVC] (n): Sensorless flux vector control for constant torque applications	44
ACC DEC	[Acceleration] [Deceleration]	3.00 seconds	63
LSP	[Low speed]	0 Hz	33
HSP	[High speed]	50 Hz	33
ItH	[Mot. therm. current]	Nominal motor current (value depending on drive rating)	33
SdC1	[Auto DC inj. level 1]	0.7 x nominal drive current, for 0.5 seconds	35
SFr	[Switching freq.]	4 kHz	40
rrS	[Reverse assign.]	[LI2] (LI2): Logic input LI2	48
PS2	[2 preset speeds]	[LI3] (LI3): Logic input LI3	73
PS4	[4 preset speeds]	[LI4] (LI4): Logic input LI4	73
Fr1	[Ref.1 channel]	[AI1] (AI1) - Analog input AI1	29
SA2	[Summing ref. 2]	[AI2] (AI2) - Analog input AI2	71
r1	[R1 Assignment]	[No drive flt] (FLt): The contact opens when a fault is detected or when the drive has been switched off	49
brA	[Dec ramp adapt.]	[Yes] (YES): Function active (automatic adaptation of deceleration ramp)	64
Atr	[Automatic restart]	[No] (nO): Function inactive	91
Stt	[Type of stop]	[Ramp stop] (rMP): On ramp	66
CFG	[Macro configuration]	[Factory set.] (Std) (1)	45

Check whether the values above are compatible with the application. If necessary, the drive can be used without changing the settings.

(1) If you want to keep the drive's presettings to a minimum, select the macro configuration [Macro configuration] (CFG) = [Start/stop] (StS) followed by [Restore config.] (FCS) = [Factory Set.] (InI) (page 46).

The [Start/stop] (StS) macro configuration is the same as the factory configuration, apart from the I/O assignment:

- Logic inputs:
  - LI1, LI2 (reversing): 2-wire transition detection control, LI1 = run forward, LI2 = run reverse.
  - LI3 to LI6: Inactive (not assigned).
- Analog inputs:
  - AI1: Speed reference 0-10 V.
  - AI2, AI3: Inactive (not assigned).
- Relay R1: The contact opens in the event of a detected fault (or drive off).
- Relay R2: Inactive (not assigned).
- Analog output AOC: 0-20 mA, inactive (not assigned).

efesotomasyon.com

Drive thermal protection

Functions:

Thermal protection by PTC probe fitted on the heatsink or integrated in the power module.
Indirect protection of the drive against overloads by tripping in the event of an overcurrent. Typical tripping values:

- Motor current = 185% of nominal drive current: 2 seconds
- Motor current = 150% of nominal drive current: 60 seconds

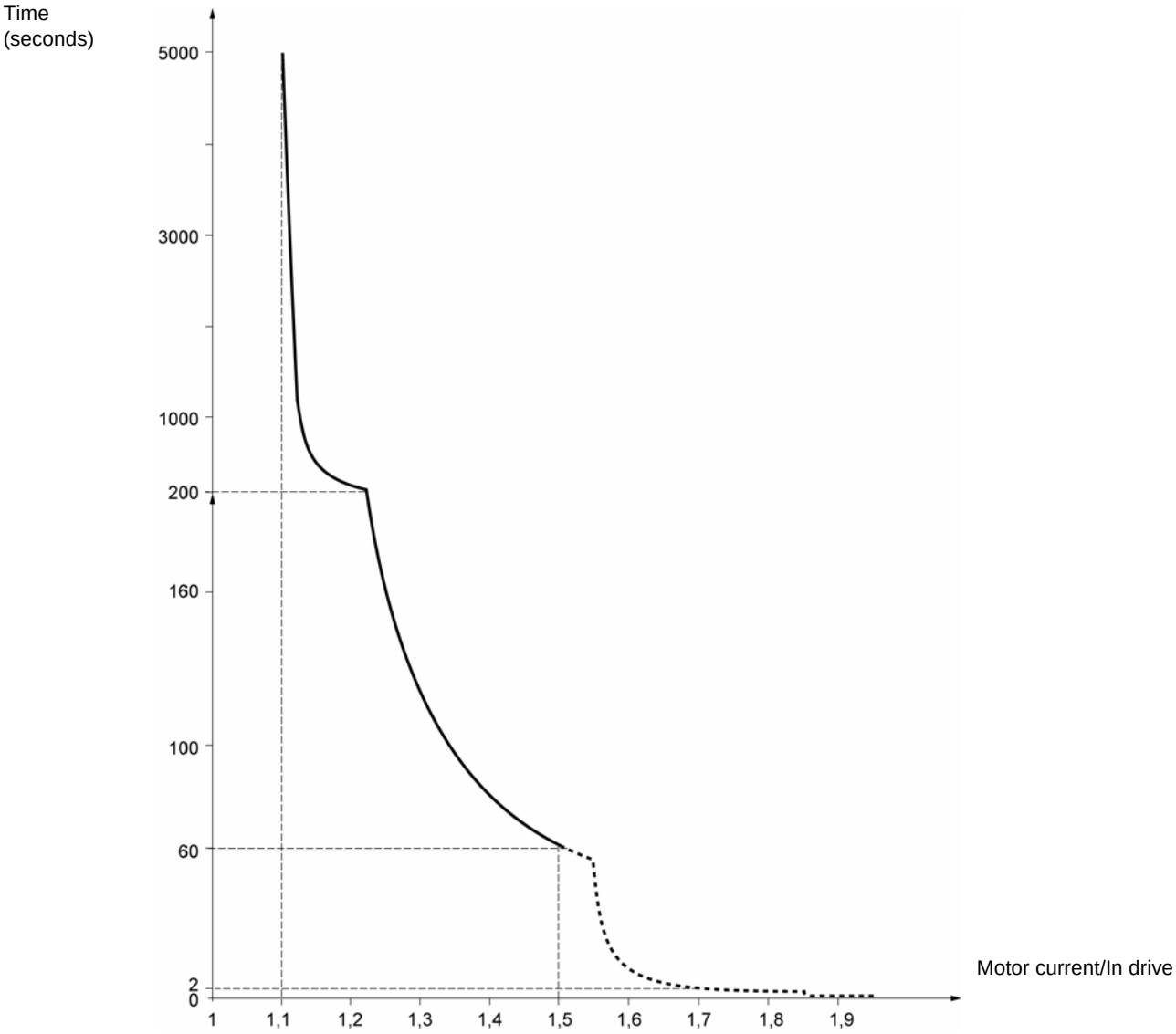

Drive ventilation

The fan starts up when the drive is powered up then shuts down after 10 seconds if a run command has not been received.
The fan is powered automatically when the drive is unlocked (direction of operation + reference). It is powered down a few seconds after the drive is locked (motor speed < 0.2 Hz and injection braking completed).

Basic functions

Motor thermal protection

Function:

Thermal protection by calculating the I^2t.
The protection takes account of self-cooled motors.

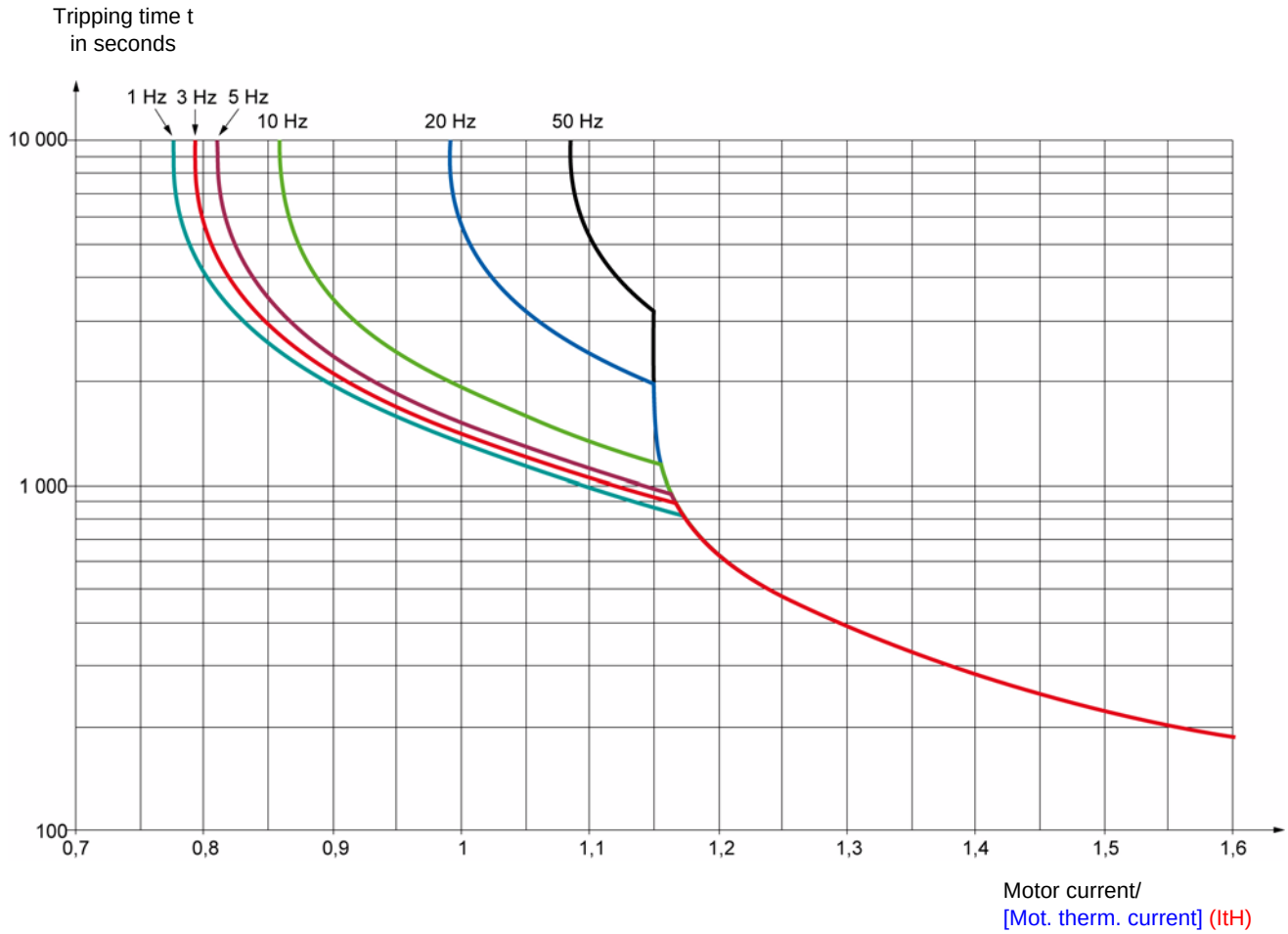

CAUTION
RISK OF DAMAGE TO MOTOR External protection against overloads is required under the following circumstances: • When the product is being switched on again, as there is no memory to record the motor thermal state • When supplying more than one motor • When supplying motors with ratings less than 0.2 times the nominal drive current • When using motor switching **Failure to follow these instructions can result in equipment damage.**

Remote display terminal option, ATV31

efesotomasyon.com

This terminal is a local control unit which can be mounted on the door of the wall-mounted or floor-standing enclosure. It has a cable with connectors, which is connected to the drive serial link (see the manual supplied with the terminal). Its display capabilities are practically identical to those of the Altivar 312. With this terminal, however, up and down arrows are used for navigation rather than a jog dial. There is also an access locking switch for the menus. There are three buttons for controlling the drive (1):

- FWD/REV: Reversal of the direction of rotation
- RUN: Motor run command
- STOP/RESET: Motor stop command or reset

Pressing the button a first time stops the motor, and if DC injection standstill braking is configured, pressing it a second time stops this braking.

View of the front panel::

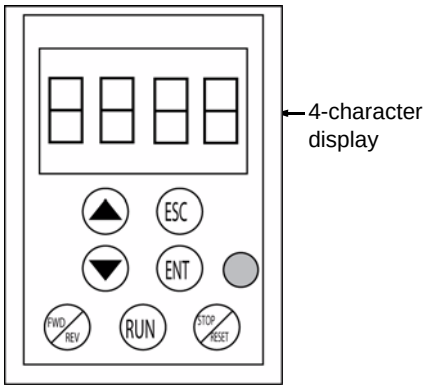

View of the rear panel :

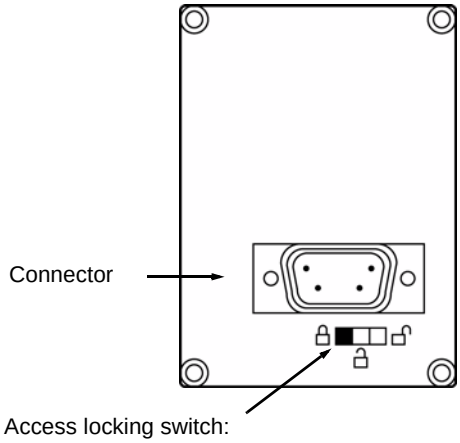

- Position: [MONITORING] (SUP-) and [SPEED REFERENCE] (rEF-) menus can be accessed.
- Position: [SETTINGS] (SEt-), [MONITORING] (SUP-) and [SPEED REFERENCE] (rEF-) can be accessed.
- Position: All menus can be accessed

Note: Protection via customer confidential code has priority over the switch.

Note:

- The remote terminal access locking switch also locks access by the drive keys.
- When the remote display terminal is disconnected, any locking remains active for the drive keys.
- The remote display terminal will only be active if the [Modbus baud rate] (tbr) parameter in the [COMMUNICATION] (COM-) menu, page 98, still has its factory setting: [19.2 Kbps] (19.2).

(1) To activate the buttons on the remote display terminal, you first have to configure [HMI command] (LCC) = [Yes] (YES), page 61.

Saving and loading configurations

Up to four complete configurations for ATV312 drives without an option card can be stored on the remote display terminal. These configurations can be saved, transported and transferred from one drive to another of the same rating. 4 different operations for the same device can also be stored on the terminal.
See the [Saving config.] (SCS) and [Restore config.] (FCS) parameters in the [MOTOR CONTROL] (drC-) menu, pages 45 and 46, the [INPUTS / OUTPUTS CFG] (I-O-) menu, pages 49 and 49, the [COMMAND] (CtL-) menu, pages 61 and 61, and the [APPLICATION FUNCT.] (FUn-) menu, pages 90 and 90.

To transfer a configuration between an ATV31 and an ATV32, follow the procedure on page 90.

Remote graphic display terminal option, ATV61/ATV71

efesotomasyon.com

Description of the terminal

Thanks to the screen size of this graphic display terminal, which works with FLASH V1.1IE19 or higher and is part of the ATV71, it is possible to display more detailed information than can be shown on an on-board display. It is connected in the same way as the ATV31 remote display terminal.

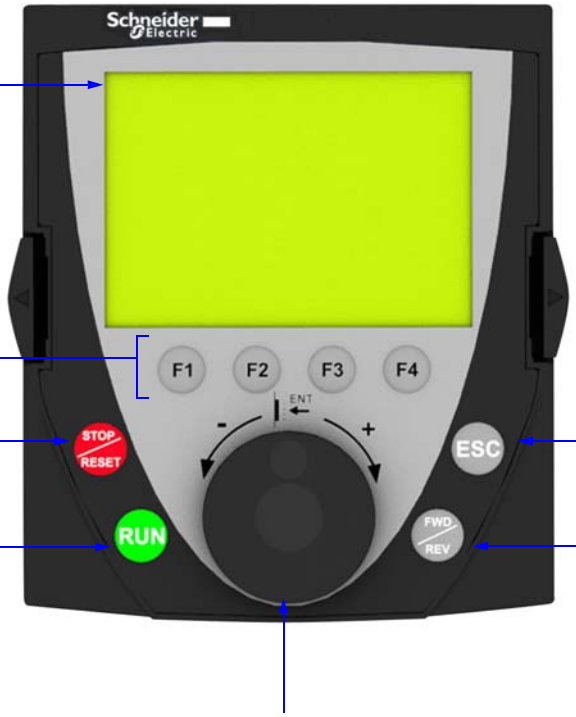

1 Graphic display

2 Function keys:
F1: CODE
F2, F3: not used
F4: MODE

3 Button to stop/reset

4 Run button

5 Navigation button:

- Press (ENT): - To save the current value
  - To enter the selected menu or parameter
- Turn CW/CCW: - To increase or decrease a value
  - To go to the next or previous line
  - To increase or decrease the reference if control via the display terminal is activated

6 Button for reversing the direction of rotation of the motor

7 ESC button:cancels a value, a parameter or a menu to return to the previous selection

Note: Keys **3**, **4**, **5** and **6** can be used to control the drive directly, if control via the terminal is activated.

To activate the buttons on the remote display terminal, you first have to configure [HMI command] (LCC) = [Yes] (YES), page 61.

Remote graphic display terminal option, ATV61/ATV71 (continued)

Powering up the graphic display terminal for the first time

When powering up the graphic display terminal for the first time, the user has to select the required language.

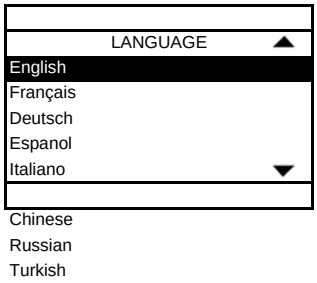

Display after the graphic display terminal has been powered up for the first time.
Select the language and press ENT.

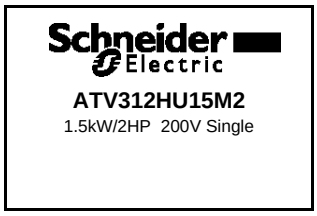

The drive's rating details will now appear.

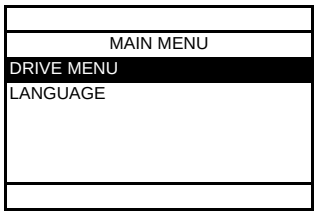

The [MAIN MENU]
follows automatically.

3 seconds
or ENT

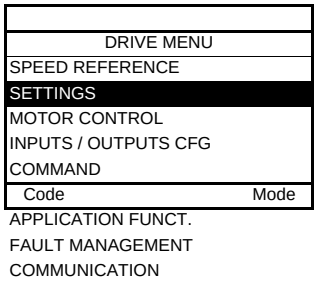

Automatically switches to the [DRIVE MENU] menu after 3 seconds.
Select the menu and press ENT.

Remote graphic display terminal option, ATV61/ATV71 (continued)

Powering up the drive for the first time

When powering up the drive for the first time, the user immediately accesses the 3 parameters below: [Standard mot. freq] (bFr), [Ref.1 channel] (Fr1), and [2/3 wire control] (tCC), page 30. .

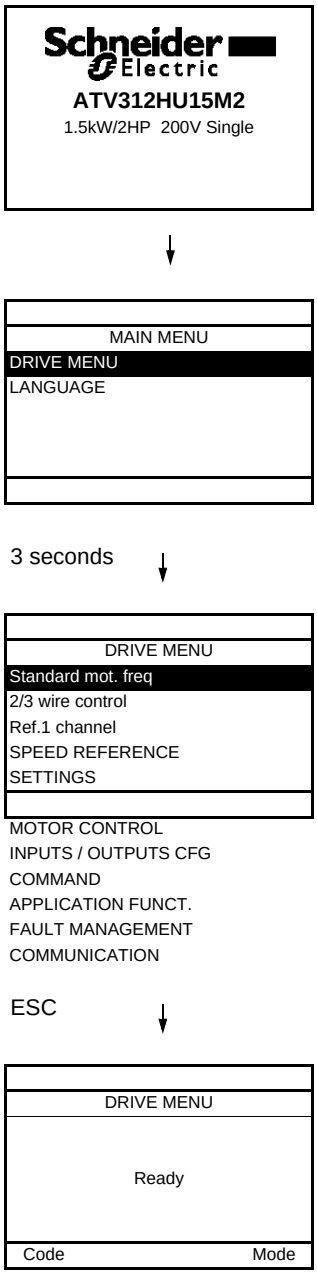

Display after the drive has been powered up for the first time.

The [MAIN MENU] follows automatically.

Automatically switches to the [DRIVE MENU] menu after 3 seconds.
Select the menu and press ENT.

The word "Ready" appears on the graphic display terminal if you press the ESC key when in the [DRIVE MENU].

Remote graphic display terminal option, ATV61/ATV71 (continued)

Subsequent power-ups

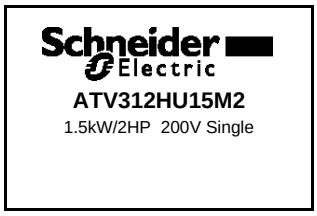

Display after powering up.

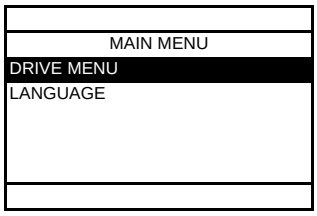

The [MAIN MENU] follows automatically.

3 seconds

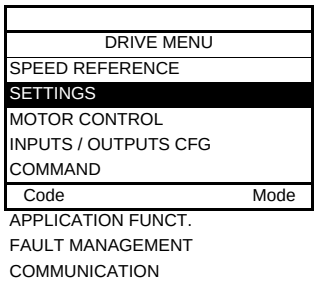

Automatically switches to the [DRIVE MENU] menu after 3 seconds.
Select the menu and press ENT.

ESC

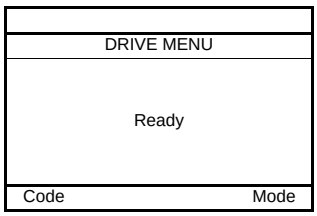

The word "Ready" appears on the graphic display terminal if you press the ESC key when in the [DRIVE MENU].

Remote display terminal option, ATV12

efesotomasyon.com

Description of the terminal

This terminal is a local control unit which can be mounted on the door of the wall-mounted or floor-standing enclosure. It has a cable with connectors, which is connected to the drive serial link (see the manual supplied with the terminal). Its display capabilities are practically identical to those of the Altivar 312. With this terminal, up and down arrows are used for navigation rather than a jog dial.

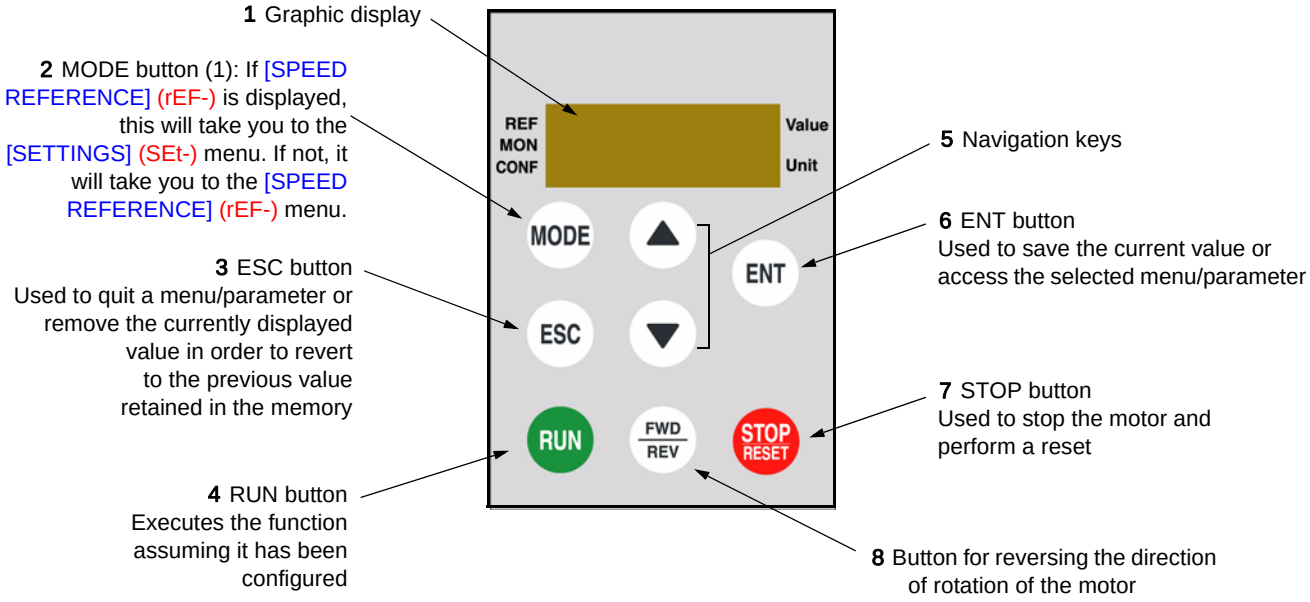

(1) If the drive is locked by a code ([PIN code 1] (COd), page 103), pressing the Mode key enables you to switch from the [MONITORING] (SUP-) menu to the [SPEED REFERENCE] (rEF-) menu and vice versa.

To activate the buttons on the remote display terminal, you first have to configure [HMI command] (LCC) = [Yes] (YES), page 61.

Structure of the parameter tables

efesotomasyon.com

The parameter tables contained in the descriptions of the various menus are organized as follows.

Example :

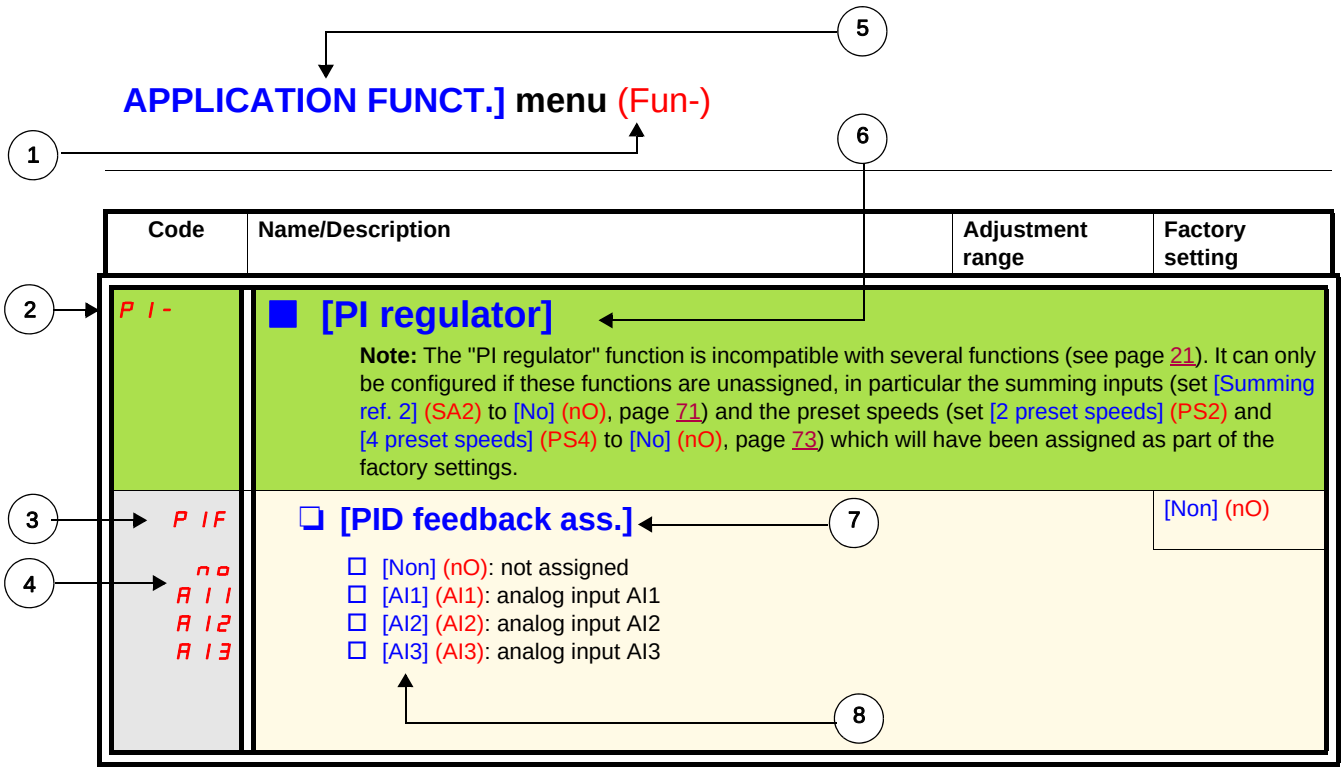

1. Name of menu on 4-digit 7-segment display
2. Submenu code on 4-digit 7-segment display
3. Parameter code on 4-digit 7-segment display
4. Parameter value on 4-digit 7-segment display
5. Name of menu on ATV61/ATV71 graphic display terminal
6. Name of submenu on ATV61/ATV71 graphic display terminal
7. Name of parameter on ATV61/ATV71 graphic display terminal
8. Value of parameter on ATV61/ATV71 graphic display terminal

Compatibility of functions

efesotomasyon.com

Incompatible functions

The following functions will be inaccessible or deactivated in the cases described below:

Automatic restart

This is only possible for the 2-wire level control type ([2/3 wire control] (tCC) = [2 wire] (2C) and [2 wire type] (tCt) = [Level] (LEL) or [Fwd priority] (PFO)).

Catch on the fly

This is only possible for the 2-wire level control type ([2/3 wire control] (tCC) = [2 wire] (2C) and [2 wire type] (tCt) = [Level] (LEL) or [Fwd priority] (PFO)).
This function is locked if automatic standstill injection has been configured as DC ([Auto DC injection] (AdC) = [Continuous] (Ct)).

Function compatibility table

The choice of application functions may be limited by the number of I/O and by the fact that some functions are incompatible with one another. Functions which are not listed in this table are compatible.
If there is an incompatibility between functions, the first function configured will prevent the others being configured.

To configure a function, first check that functions which are incompatible with it are unassigned, especially those which are assigned in the factory settings.

	Summing inputs (factory setting)	+/- speed (1)	Management of limit switches	Preset speeds (factory setting)	PI regulator	Jog operation	Brake control	DC injection stop	Fast stop	Freewheel stop
Summing inputs (factory setting)		●		↑	●	↑				
+/- speed (1)	●			●	●	●				
Management of limit switches					●					
Preset speeds (factory setting)	←	●			●	↑				
PI regulator	●	●	●	●		●	●			
Jog operation	←	●		←	●		●			
Brake control					●	●		●		
DC injection stop							●			↑
Fast stop										↑
Freewheel stop								←	←	

(1) Excluding special application with reference channel [Ref.2 channel] (Fr2) (see diagrams 53 and 55)

● Incompatible functions Compatible functions Not applicable

Priority functions (functions which cannot be active at the same time):

← ↑ The function marked with the arrow takes priority over the other.

Stop functions take priority over run commands.
Speed references via logic command take priority over analog references.

Compatibility of functions

Logic and analog input application functions

Each of the functions on the following pages can be assigned to one of the inputs.
A single input can activate several functions at the same time (reverse and 2nd ramp for example). **The user must therefore ensure that these functions can be used at the same time**.
The [MONITORING] (SUP-) menu ([[LOGIC INPUT CONF.]] (LIA-) parameter, page 104, and [[ANALOG INPUTS IMAGE]] (AIA-) parameter, page 104) can be used to display the functions assigned to each input in order to check their compatibility.

Before assigning a reference, command or function to a logic or analog input, the user must check that this input has not already been assigned in the factory settings and that no other input has been assigned to an incompatible or unwanted function.

- Example of incompatible function to be unassigned:
  In order to use the "+speed/-speed" function, the preset speeds and summing input 2 must first be unassigned.

The table below lists the factory-set input assignments and the procedure for unassigning them.

Assigned input	Function	Code	To unassign, set to:	Page
LI2	Run reverse	rrS	nO	48
LI3	2 preset speeds	PS2	nO	73
LI4	4 preset speeds	PS4	nO	73
AI1	Reference 1	Fr1	Anything but AI1	58
LI1	Run forward	tCC	2C or 3C	47
AI2	Summing input 2	SA2	nO	71

List of functions that can be assigned to inputs/outputs

efesotomasyon.com

Logic inputs	Page	Code	Factory setting
Not assigned	-	-	LI5 - LI6
Run forward	-	-	LI1
2 preset speeds	73	PS2	LI3
4 preset speeds	73	PS4	LI4
8 preset speeds	73	PS8	
16 preset speeds	74	PS16	
2 preset PI references	81	Pr2	
4 preset PI references	82	Pr4	
+ speed	78	USP	
- speed	78	dSP	
Jog operation	76	JOG	
Ramp switching	64	rPS	
2nd current limit switching	86	LC2	
Fast stop via logic input	66	FSt	
DC injection via logic input	67	dC1	
Freewheel stop via logic input	68	nSt	
Run reverse	48	rrS	LI2
External fault	93	EtF	
RESET	92	rSF	
Forced local mode	99	FLO	
Reference switching	59	rFC	
Control channel switching	60	CCS	
Motor switching	87	CHP	
Forward limit switch	89	LAF	
Reverse limit switch	89	LAr	
Fault inhibition	96	InH	

Analog inputs	Page	Code	Factory setting
Not assigned	-	-	AI3
Reference 1	58	Fr1	AI1
Reference 2	58	Fr2	
Summing input 2	71	SA2	AI2
Summing input 3	71	SA3	
PI regulator feedback	81	PIF	

List of functions that can be assigned to inputs/outputs

Analog/logic output	Page	Code	Factory setting
Not assigned	-	-	AOC/AOV
Motor current	48	OCr	
Motor frequency	48	OFr	
Motor torque	48	Otr	
Power supplied by the drive	48	OPr	
Drive detected fault (logic data)	48	FLt	
Drive running (logic data)	48	rUn	
Frequency threshold reached (logic data)	48	FtA	
High speed (HSP) reached (logic data)	48	FLA	
Current threshold reached (logic data)	48	CtA	
Frequency reference reached (logic data)	48	SrA	
Motor thermal threshold reached (logic data)	48	tSA	
Brake sequence (logic data)	48	bLC	

Relay	Page	Code	Factory setting
Not assigned	-	-	R2
Detected fault	49	FLt	R1
Drive running	49	rUn	
Frequency threshold reached	49	FtA	
High speed (HSP) reached	49	FLA	
Current threshold reached	49	CtA	
Frequency reference reached	49	SrA	
Motor thermal threshold reached	49	tSA	
Brake sequence	49	bLC	
Copy of the logic input	49	LI1 to LI6	

List of functions that can be assigned to the Network and Modbus control word bits

efesotomasyon.com

Bits 11 to 15 of the control word	Page	Code
2 preset speeds	73	PS2
4 preset speeds	73	PS4
8 preset speeds	73	PS8
16 preset speeds	74	PS16
2 preset PI references	81	Pr2
4 preset PI references	82	Pr4
Ramp switching	64	rPS
2nd current limit switching	86	LC2
Fast stop via logic input	66	FSt
DC injection	67	dC1
External fault	93	EtF
Reference switching	59	rFC
Control channel switching	60	CCS
Motor switching	87	CHP

Checklist

efesotomasyon.com

Carefully read the information contained in the programming, installation and simplified manuals, as well as the information in the catalog.
Before starting to use the drive, please check the following points relating to mechanical and electrical installations.
For the full range of documentation, please visit www.schneider-electric.com.

1. Mechanical installation (see the simplified and installation manuals)

- For details of the different installation types and recommendations concerning ambient temperature, please refer to the installation instructions in the simplified or installation manuals.
- Install the drive vertically in accordance with the specifications. Please refer to the installation instructions in the simplified or installation manuals.
- When using the drive, both the environmental conditions defined under standard 60721-3-3 and the levels defined in the catalog must be respected.
- Install the required options for your application. Refer to the catalog for details.

2. Electrical installation (see the simplified and installation manuals)

- Ground the drive. See the sections on how to ground equipment in the simplified and installation manuals.
- Make sure the input supply voltage matches the nominal drive voltage and connect the line supply in accordance with the simplified and installation manuals.
- Make sure you use appropriate input line fuses and circuit breakers. See the simplified and installation manuals.
- Arrange the cables for the control terminals as required (see the simplified and installation manuals). Separate the supply and control cables in accordance with EMC compatibility rules.
- The ATV312●●●●M2 and ATV312●●●●N4 ranges include an EMC filter Using an IT jumper helps reduce leakage current. This is explained in the paragraph about the internal EMC filter on the ATV312●●●●M2 and the ATV312●●●●N4 in the installation manual.
- Make sure the motor connections are right for the voltage (star, delta).

3. Using and starting up the drive

- Start the drive. [Standard mot. freq] (bFr), page 29, is displayed the first time the drive is powered up. Make sure the frequency defined by frequency bFr (the factory setting is 50 Hz) matches the motor's frequency.
- When the drive is powered up for the first time, the [Ref.1 channel] (Fr1) parameter, page 29, and the [2/3 wire control] (tCC) parameter, page 30, are displayed after [Standard mot. freq] (bFr). These parameters will need to be adjusted if you wish to control the drive locally.
- When the drive is powered up subsequently, [Ready] (rdY) is displayed on the HMI.
- The [Restore config.] (FCS) function, page 46, is used to reinitialize the drive with the factory settings.

efesotomasyon.com

Description of the HMI

Functions of the display and the keys

- REF LED, illuminated if [SPEED REFERENCE] (rEF-) menu is active
- Load LED
- MON LED, illuminated if [MONITORING] (SUP-) menu is active
- CONF LED, illuminated if the [SETTINGS] (SEt-), [MOTOR CONTROL] (drC-),[INPUTS / OUTPUTS CFG] (I-O-), [COMMAND] (CtL-), [APPLICATION FUNCT] (FUn-), [FAULT MANAGEMENT] (FLt-) or [COMMUNICATION] (COM-) menus are active

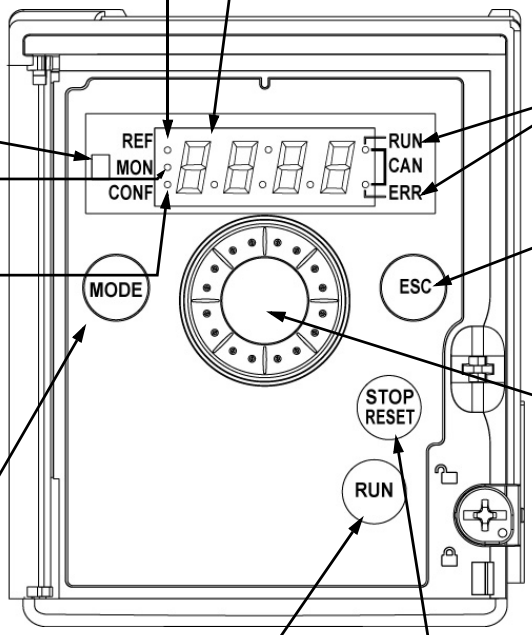

- 4 x 7 segment display
- 2 CANopen status LEDs
- Used to quit a menu or parameter or to clear the value displayed in order to revert to the value in the memory
- In LOCAL configuration, 2s press on ESC button switches between the control/ programming modes
- Jog dial - can be used for navigation by turning it clockwise or counter-clockwise - pressing the jog dial enables the user to make a selection or confirm information. = ENT

Functions as a potentiometer in LOCAL configuration and in REMOTE configuration if [Ref.1 channel] (Fr1-) in the [COMMAND] (CtL-) menu is set to [Image input AIV1] (AIV1)

MODE button (1): 3s press on MODE button switches between the REMOTE/LOCAL configurations. If [SPEED REFERENCE] (rEF-) is displayed, this will take you to the [SETTINGS] (SEt-) menu. If not, it will take you to the [SPEED REFERENCE] (rEF-) menu.

RUN button: Controls powering up of the motor for forward running in LOCAL configuration and in REMOTE configuration if the [2/3 wire control] (tCC) parameter in the [INPUTS /OUTPUTS CFG] (I-O-) menu is set to [Local] (LOC), page 47 (could be hidden by door if function disabled)

STOP/RESET button
- Enables detected fault to be reset
- Can be used to control motor stopping
  - If [2/3 wire control] (tCC) is not set to [Local] (LOC), freewheel stop
  - If [2/3 wire control] (tCC) is set to [Local] (LOC), stop on ramp or freewheel stop during DC injection braking

Note1: In LOCAL configuration, the three Leds REF, MON,and CONF are blinking simultaneously in programming mode and are working as a Led chaser in control mode.

Normal display, with no fault code displayed and no startup:

- 43.0 : Displays the parameter selected in the [MONITORING] (SUP-) menu (default: motor frequency). If the current is limited, the display flashes. In such cases, CLI will appear at the top left if an ATV61/ATV71 graphic display terminal is connected to the drive.
- Int : Initialization sequence
- rdY: Drive ready
- dCb: DC injection braking in progress
- nSt: Freewheel stop
- FSt: Fast stop
- tUn : Auto-tuning in progress

In the event of a detected fault, the display will flash to notify the user accordingly. If an ATV61/ATV71 graphic display terminal is connected, the name of the detected fault will be displayed.

(1) If the drive is locked by a code ([PIN code 1] (COd), page 103), pressing the Mode key enables you to switch from the [MONITORING] (SUP-) menu to the [SPEED REFERENCE] (rEF-) menu and vice versa. It is no longer possible to switch between LOCAL and REMOTE configurations.

Programming

REMOTE and LOCAL configuration

The LOCAL configuration allows to activate automatically the embedded RUN button and the jog dial as a potentiometer.
In that configuration, the speed adjustment will also be effective on remote keypads. MODE button on ATV12 remote display terminal and on ATV61/71 graphic display terminal (function key F4) is also active to switch from one configuration to another.

[Ref.1 channel] (Fr1) is set to [AI Virtual 1] (AIV1) and [2/3 wire control] (tCC) are set to [2 wire] (2C) when switching to LOCAL configuration.
For parameters interdependencies reasons, switching from one configuration to another will change other parameters (for example : Input/Output assignment will return to their factory value). **Choose the configuration (REMOTE or LOCAL) before starting the parameters adjustment of the drive.**

Structure of the menus

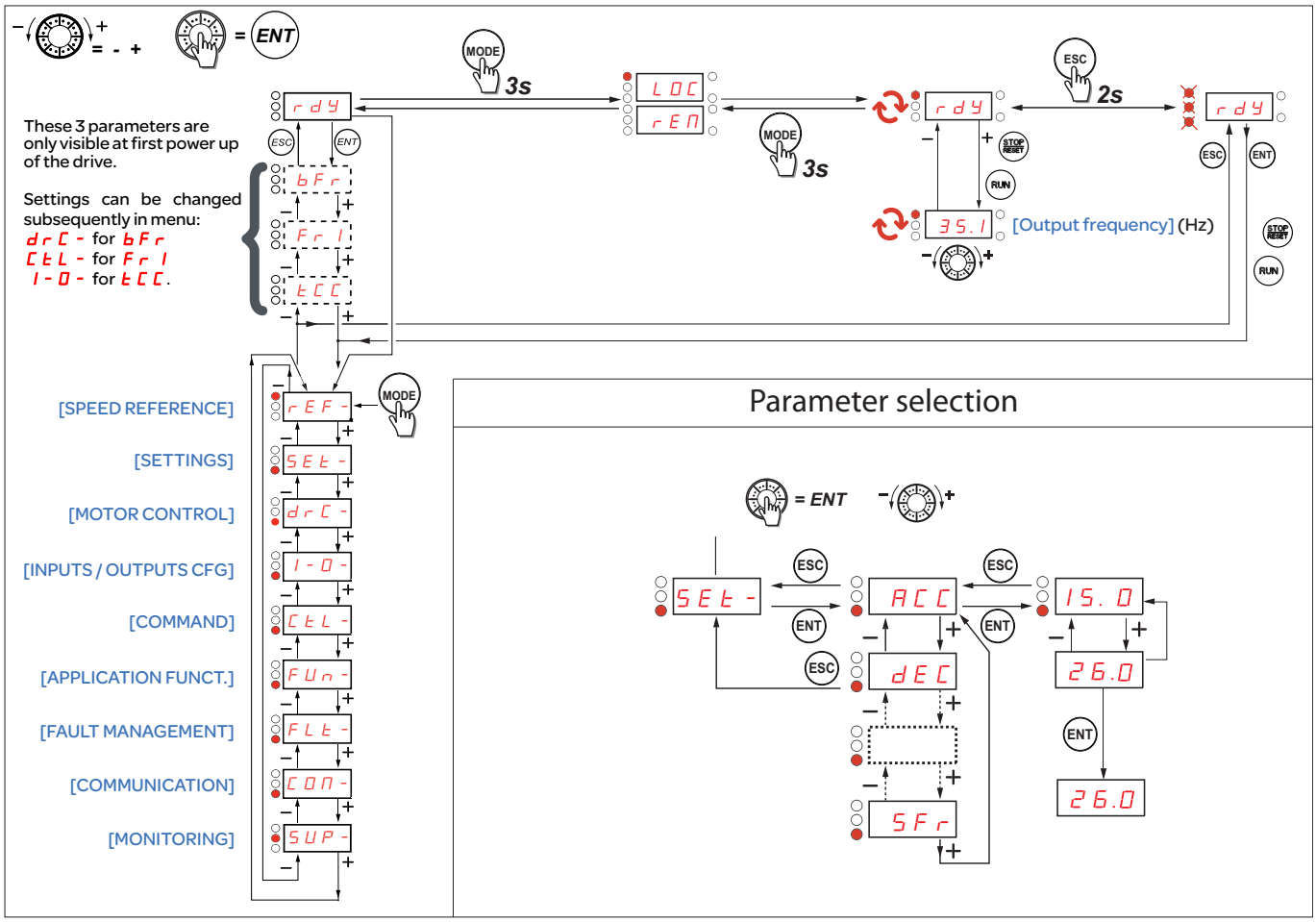

On the 7-segment display, a dash after menu and submenu codes is used to differentiate them from parameter codes.
Examples: [APPLICATION FUNCT.] (FUn-) menu, [Acceleration] (ACC) parameter

Configuring the [Standard mot. freq] (bFr), [2/3 wire control] (tCC), and [Ref.1 channel] (Fr1) parameters

These parameters can only be modified when the drive is stopped and no run command is present.

Code	Description	Adjustment range	Factory setting
bFr	❑ **[Standard mot. freq]** This parameter is only visible the first time the drive is powered up. It can be modified at any time in the [MOTOR CONTROL] (drC-) menu. 50 [50Hz IEC] (50): 50 Hz 60 [60Hz NEMA] (60): 60 Hz This parameter modifies the presets of the following parameters: [High speed] (HSP), page 33, [Freq. threshold] (Ftd), page 39, [Rated motor freq.] (FrS), page 41, and [Max frequency] (tFr), page 44		[50Hz IEC] (50)
Fr1	❑ **[Ref.1 channel]** AI1 ☐ [AI1] (AI1) - Analog input AI1 AI2 ☐ [AI2] (AI2) - Analog input AI2 AI3 ☐ [AI3] (AI3) - Analog input AI3 AIU1 ☐ [AI Virtual 1] (AIV1) - In terminal control mode, the jog dial functions as a potentiometer. If [ACCESS LEVEL] (LAC) = [Level 2] (L2) or [Level 3] (L3), the following additional assignments are possible: UPdt ☐ [+/- SPEED] (UPdt): +/- speed reference via LI. See configuration page 78. UPdH ☐ [+/-spd HMI] (UPdH): +/- speed reference by turning the jog dial on the ATV312 keypad. To use, display the frequency [Output frequency] (rFr), page 101. The +/- speed function via the keypad or the terminal is controlled from the [MONITORING] (SUP-) menu by selecting the [Output frequency] (rFr) parameter. If [ACCESS LEVEL] (LAC) = [Level 3] (L3), the following additional assignments are possible: LCC ☐ [HMI] (LCC) reference via the remote display terminal, [HMI Frequency ref.] (LFr) parameter in the [SETTINGS] (SEt-) menu, page 32 Mdb ☐ [Modbus] (Mdb): Reference via Modbus nEt ☐ [Com. card] (nEt): Reference via network communication protocol		[AI1] (AI1)

Programming

Code	Description	Adjustment range	Factory setting
tCC	❑ **[2/3 wire control]**		[2 wire] (2C)

⚠ DANGER

UNINTENDED EQUIPMENT OPERATION

When the [2/3 wire control] (tCC) parameter is changed, the [Reverse assign.] (rrS) parameter, page 48, and the [2 wire type] (tCt) parameter, page 47, and all the assignments involving the logic inputs will revert to their default values.
Check that this change is compatible with the wiring diagram used.

Failure to follow these instructions will result in death or serious injury.

Control configuration:

- 2C ☐ [2 wire] (2C): 2-wire control
- 3C ☐ [3 wire] (3C): 3-wire control
- LOC ☐ [Local] (LOC): Local control (RUN/STOP/RESET drive) (invisible if [ACCESS LEVEL] (LAC) = [Level 3] (L3), page 58)

2-wire control: The open or closed state of the input controls running or stopping.
Wiring example:
LI1: Forward
LIx: Reverse

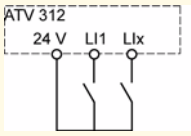

2 s

3-wire control (pulse control): A "forward" or "reverse" pulse is sufficient to control startup, a "stop" pulse is sufficient to control stopping.
Wiring example:
LI1: Stop
LI2: Forward
LIx: Reverse

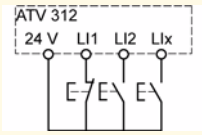

2 s The jog dial (ENT) needs to be pressed and held down (for 2 s) to change the assignment for this parameter.

[SPEED REFERENCE] (rEF-) menu

efesotomasyon.com

The [SPEED REFERENCE] (rEF-) menu displays [HMI Frequency ref.] (LFr), [Image input AIV1] (AIV1) or [Frequency ref.] (FrH) depending on which control channel is active.

During local control, the HMI's jog dial functions as a potentiometer, making it possible to increase or reduce the reference value within limits defined by the [Low speed] (LSP) and [High speed] (HSP) parameters.

When local control is deactivated, by the [Ref.1 channel] (Fr1) parameter, only the reference values are displayed. The value will be read-only and can only be changed via the jog dial (the speed reference is supplied by an AI or another source).

The reference displayed will depend on how the drive has been configured.

Code	Description	Factory setting
LFr	❑ **[HMI Frequency ref.]** This parameter only appears if the function has been enabled. It is used to change the speed reference from the remote control. ENT does not have to be pressed to enable a change of reference.	0 to 500 Hz
AIU1	❑ **[Image input AIV1]** Used to amend the speed reference via the jog dial	0 to 100%
FrH	❑ **[Frequency ref.]** This parameter is read-only. It enables you to display the speed reference applied to the motor, regardless of which reference channel has been selected.	LSP to HSP Hz

[SETTINGS] (SEt-) menu

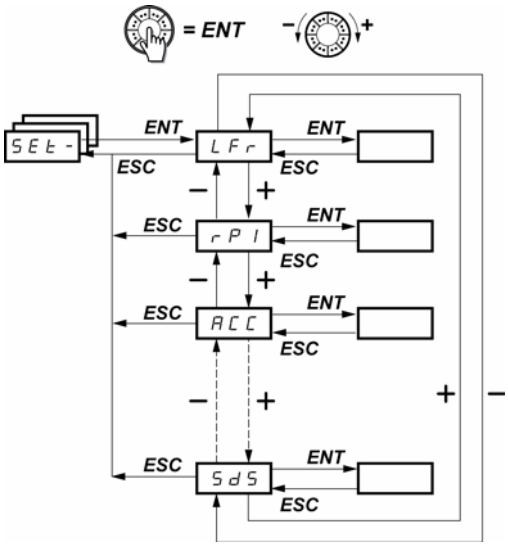

Speed reference via the display terminal

Scaling factor for the [Cust. output value] (SPd1) parameter

The adjustment parameters can be modified with the drive running or stopped.
Note: Changes should preferably be made with the drive stopped.

Code	Description	Adjustment range	Factory setting
LFr ★	❑ **[HMI Frequency ref.]** This parameter is displayed if [HMI command] (LCC) = [Yes] (YES), page 61 or if [Ref.1 channel] (Fr1)/[Ref.2 channel] (Fr2) = [HMI] (LCC) page 58, and if a remote display terminal is connected. In such cases, [HMI Frequency ref.] (LFr) can also be accessed via the drive's keypad. [HMI Frequency ref.] (LFr) is reinitialized to 0 when power is switched off.	0 to HSP	-
rPI ★	❑ **[Internal PID ref.]** Parameter is only visible if [PID feedback ass.] (PIF) is not set to [No] (nO), page 81.	0.0 to 100%	0%
ACC	❑ **[Acceleration]** Defined to accelerate from 0 to the nominal frequency [Rated motor freq.] (FrS) in the [MOTOR CONTROL] (drC-) menu.	In accordance with Inr, page 63	3 s
AC2 ★	❑ **[Acceleration 2]** Parameter can be accessed if [Ramp 2 threshold] (Frt) > 0, page 64, or if [Ramp switch ass.] (rPS) is assigned, page 64.	In accordance with Inr, page 63	5 s
dE2 ★	❑ **[Deceleration 2]** Parameter can be accessed if [Ramp 2 threshold] (Frt) > 0, page 64, or if [Ramp switch ass.] (rPS) is assigned, page 64.	In accordance with Inr, page 63	5 s
dEC	❑ **[Deceleration]** Defined to decelerate from the nominal frequency [Rated motor freq.] (FrS) (parameter in the [MOTOR CONTROL] (drC-)) menu to 0. Check that the value for [Deceleration] (dEC) is not too low in relation to the load to be stopped.	In accordance with Inr, page 63	3 s

★ These parameters only appear if the corresponding function has been selected in another menu. When the parameters can also be accessed and set from within the configuration menu for the corresponding function, their description is detailed in these menus, on the pages indicated, to aid programming.

[SETTINGS] (SEt-) menu

Code	Description	Adjustment range	Factory setting
tA1 ★	❑ **[Begin Acc round]** Parameter can be accessed if the [Ramp type] (rPt) = [Customized] (CUS), page 62.	0 to 100	10
tA2 ★	❑ **[End Acc round]** Parameter can be accessed if the [Ramp type] (rPt) = [Customized] (CUS), page 62.	0 to (100-tA1)	10
tA3 ★	❑ **[Begin Dec round]** Parameter can be accessed if the [Ramp type] (rPt) = [Customized] (CUS), page 62.	0 to 100	10
tA4 ★	❑ **[End Dec round]** Parameter can be accessed if the [Ramp type] (rPt) = [Customized] (CUS), page 62.	0 to (100-tA3)	10
LSP	❑ **[Low speed]** Motor frequency at min. reference	0 to HSP	0
HSP	❑ **[High speed]** Motor frequency at max. reference: Ensure that this setting is appropriate for the motor and the application.	LSP to tFr	bFr
ItH	❑ **[Mot. therm. current]** Set [Mot. therm. current] (ItH) to the nominal current indicated on the motor's rating plate. If you wish to suppress thermal protection, see [Overload fault mgt] (OLL), page 94.	0.2 to 1.5 In (1)	In accordance with the drive rating
UFr	❑ **[IR compensation]** - For [U/F mot 1 selected] (UFt) = [SVC] (n) or [Energy sav.] (nLd), page 44: IR compensation - For [U/F mot 1 selected] (UFt) = [Cst. torque] (L) or [Var. torque] (P), page 44: Voltage boost Used to optimize the torque at very low speed (increase [IR compensation] (UFr) if the torque is insufficient). Check that the value for [IR compensation] (UFr) is not too high when the motor is in a hot state otherwise some instabilities can occur. **Note:** Changing [U/F mot 1 selected] (UFt), page 44, will cause [IR compensation] (UFr) to return to its factory setting (20%).	0 to 100%	20%
FLG ★	❑ **[FreqLoopGain]** Parameter can only be accessed if [U/F mot 1 selected] (UFt) = [SVC] (n) or [Energy sav.] (nLd), page 44. The FLG parameter adjusts the drive's ability to follow the speed ramp on the basis of the inertia of the machine being driven. Too high a gain may result in operating instability. 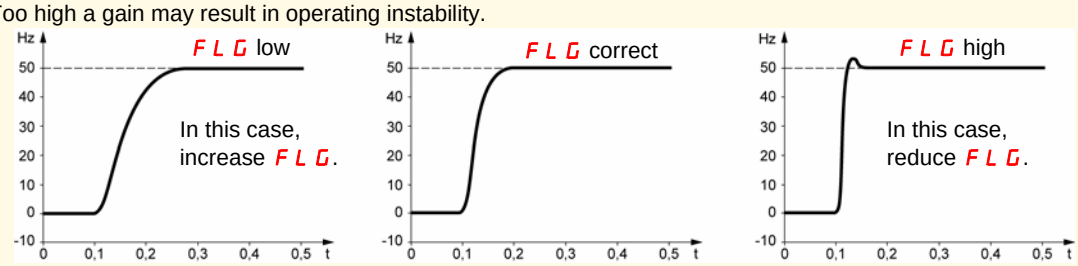	1 to 100%	20%

(1) In corresponds to the nominal drive current indicated in the Installation Manual and on the drive nameplate.

★ These parameters only appear if the corresponding function has been selected in another menu. When the parameters can also be accessed and set from within the configuration menu for the corresponding function, their description is detailed in these menus, on the pages indicated, to aid programming.

[SETTINGS] (SEt-) menu

Code	Description	Adjustment range	Factory setting
StA	❑ **[Fr.Loop.Stab]**	1 to 100%	20%

Parameter can only be accessed if [U/F mot 1 selected] (UFt) = [SVC] (n) or [Energy sav.] (nLd), page 44.
Used to adapt the return to steady state after a speed transient (acceleration or deceleration), according to the dynamics of the machine.
Gradually increase the stability to avoid any overspeed.

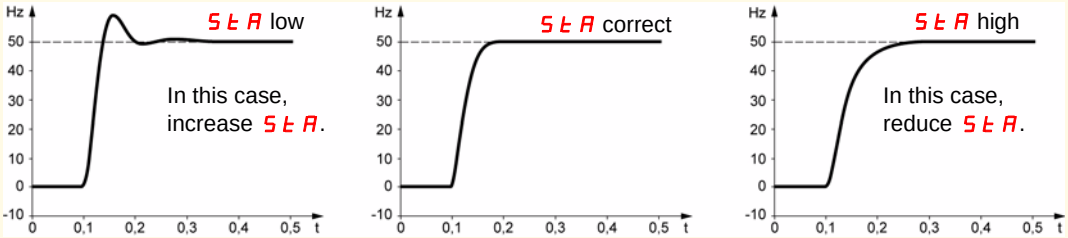

★

SLP	❑ **[Slip compensation]**	0 to 150%	100%

Parameter can only be accessed if [U/F mot 1 selected] (UFt) = [SVC] (n) or [Energy sav.] (nLd), page 44.
Adjusts the slip compensation around the value set by the nominal motor speed.
The speeds given on motor rating plates are not necessarily exact.
- If slip setting < actual slip: the motor is not rotating at the correct speed in steady state.
- If slip setting > actual slip: the motor is overcompensated and the speed is unstable.

★

IdC	❑ **[DC inject. level 1]** (2)	0 to In (1)	0.7 In (1)

CAUTION

RISK OF DAMAGE TO THE MOTOR
- Check that the motor will withstand this current without overheating..

Failure to follow these instructions can result in equipment damage.

Parameter can be accessed if [Type of stop] (Stt) = [DC injection] (dCI), page 66, or if [DC injection assign.] (dCI) is not set to [No] (nO), page 67.
After 5 seconds, the injection current is limited to 0.5 [Mot. therm. current] (ItH) if set to a higher value.

★

tdC	❑ **[DC injection time 2]** (2)	0.1 to 30 s	0.5 s

CAUTION

RISK OF DAMAGE TO THE MOTOR
- Long periods of DC injection braking can cause overheating and damage the motor.
- Protect the motor by avoiding long periods of DC injection braking.

Failure to follow these instructions can result in equipment damage.

Parameter can be accessed if [Type of stop] (Stt) = [DC injection] (dCI) , page 66.

★

tdC1	❑ **[Auto DC inj. time 1]**	0.1 to 30 s	0.5 s

CAUTION

RISK OF DAMAGE TO THE MOTOR
- Long periods of DC injection braking can cause overheating and damage the motor.
- Protect the motor by avoiding long periods of DC injection braking.

Failure to follow these instructions can result in equipment damage.

Parameter can be accessed if [Auto DC injection] (AdC) is not set to [No] (nO), page 69.

★

(1) In corresponds to the nominal drive current indicated in the Installation Manual and on the drive nameplate.
(2) **Note:** These settings are not related to the "automatic standstill DC injection" function.

★ These parameters only appear if the corresponding function has been selected in another menu. When the parameters can also be accessed and set from within the configuration menu for the corresponding function, their description is detailed in these menus, on the pages indicated, to aid programming.

[SETTINGS] (SEt-) menu

Code	Description	Adjustment range	Factory setting
SdC1	❑ **[Auto DC inj. level 1]**	0 to 1.2 In (1)	0.7 In (1)
	CAUTION **RISK OF DAMAGE TO THE MOTOR** • Check that the motor will withstand this current without overheating. **Failure to follow these instructions can result in equipment damage.**		
★	Parameter can be accessed if [Auto DC injection] (AdC) is not set to [No] (nO), page 69. **Note:** Check that the motor will withstand this current without overheating.		
tdC2	❑ **[Auto DC inj. time 2]**	0 to 30 s	0 s
	CAUTION **RISK OF DAMAGE TO THE MOTOR** • Long periods of DC injection braking can cause overheating and damage the motor. • Protect the motor by avoiding long periods of DC injection braking. **Failure to follow these instructions can result in equipment damage.**		
★	Parameter can be accessed if [Auto DC injection] (AdC) is not set to [No] (nO), page 69.		
SdC2	❑ **[Auto DC inj. level 2]**	0 to 1.2 In (1)	0.5 In (1)
	CAUTION **RISK OF DAMAGE TO THE MOTOR** • Check that the motor will withstand this current without overheating. **Failure to follow these instructions can result in equipment damage.**		
★	Parameter can be accessed if [Auto DC injection] (AdC) is not set to [No] (nO), page 69. **Note:** Check that the motor will withstand this current without overheating.		

(1) In corresponds to the nominal drive current indicated in the Installation Manual and on the drive nameplate.
(2) **Note:** These settings are not related to the "automatic standstill DC injection" function.

★ These parameters only appear if the corresponding function has been selected in another menu. When the parameters can also be accessed and set from within the configuration menu for the corresponding function, their description is detailed in these menus, on the pages indicated, to aid programming.

[SETTINGS] (SEt-) menu

Code	Description	Adjustment range	Factory setting
JPF	❑ **[Skip Frequency]** Helps to prevent prolonged operation at a frequency range of ± 1 Hz around [Skip Frequency] (JPF). This function helps to prevent a critical speed which leads to resonance. Setting the function to 0 renders it inactive.	0 to 500 Hz	0 Hz
JF2	❑ **[Skip Frequency 2]** Helps to prevent prolonged operation at a frequency range of ± 1 Hz around [Skip Frequency 2] (JF2). This function helps to prevent a critical speed which leads to resonance. Setting the function to 0 renders it inactive.	1 to 500 Hz	0 Hz
JGF ★	❑ **[Jog frequency]** Parameter can be accessed if [JOG] (JOG) is not set to [No] (nO), page 76.	0 to 10 Hz	10 Hz
rPG ★	❑ **[PID prop. gain]** Parameter is only visible if [PID feedback ass.] (PIF) is not set to [No] (nO), page 81. It provides dynamic performance when PI feedback is changing quickly.	0.01 to 100	1
rIG ★	❑ **[PID integral gain]** Parameter is only visible if [PID feedback ass.] (PIF) is not set to [No] (nO), page 81. It provides static precision when PI feedback is changing slowly.	0.01 to 100/s	1
FbS ★	❑ **[PID fbk scale factor]** Parameter is only visible if [PID feedback ass.] (PIF) is not set to [No] (nO), page 81. For adapting the process.	0.1 to 100	1
PIC nO YES ★	❑ **[PID correct. reverse]** Parameter is only visible if [PID feedback ass.] (PIF) is not set to [No] (nO), page 81. ☐ [No] (nO): Normal ☐ [Yes] (YES): Reverse		[No] (nO)
rP2 ★	❑ **[Preset ref. PID 2]** Parameter is only visible if [PID feedback ass.] (PIF) is not set to [No] (nO), page 81, and if [2 preset PID ref.] (Pr2), page 81, has been enabled by the input selection.	0 to 100%	30%
rP3 ★	❑ **[Preset ref. PID 3]** Parameter is only visible if [PID feedback ass.] (PIF) is not set to [No] (nO), page 81, and if [4 preset PID ref.] (Pr4), page 82, has been enabled by the input selection.	0 to 100%	60%
rP4 ★	❑ **[Preset ref. PID 4]** Parameter is only visible if [PID feedback ass.] (PIF) is not set to [No] (nO), page 81, and if [4 preset PID ref.] (Pr4), page 82, has been enabled by the input selection.	0 to 100%	90%
SP2 ★	❑ **[Preset speed 2]** See page 74.	0 to 500 Hz	10 Hz

★ These parameters only appear if the corresponding function has been selected in another menu. When the parameters can also be accessed and set from within the configuration menu for the corresponding function, their description is detailed in these menus, on the pages indicated, to aid programming.

[SETTINGS] (SEt-) menu

Code	Description	Adjustment range	Factory setting
SP3 ★	❑ **[Preset speed 3]** See page 74.	0 to 500 Hz	15 Hz
SP4 ★	❑ **[Preset speed 4]** See page 74.	0 to 500 Hz	20 Hz
SP5 ★	❑ **[Preset speed 5]** See page 74.	0 to 500 Hz	25 Hz
SP6 ★	❑ **[Preset speed 6]** See page 74.	0 to 500 Hz	30 Hz
SP7 ★	❑ **[Preset speed 7]** See page 74.	0 to 500 Hz	35 Hz
SP8 ★	❑ **[Preset speed 8]** See page 74.	0 to 500 Hz	40 Hz
SP9 ★	❑ **[Preset speed 9]** See page 74.	0 to 500 Hz	45 Hz
SP10 ★	❑ **[Preset speed 10]** See page 74.	0 to 500 Hz	50 Hz
SP11 ★	❑ **[Preset speed 11]** See page 75.	0 to 500 Hz	55 Hz
SP12 ★	❑ **[Preset speed 12]** See page 75.	0 to 500 Hz	60 Hz
SP13 ★	❑ **[Preset speed 13]** See page 75.	0 to 500 Hz	70 Hz
SP14 ★	❑ **[Preset speed 14]** See page 75.	0 to 500 Hz	80 Hz
SP15 ★	❑ **[Preset speed 15]** See page 75.	0 to 500 Hz	90 Hz
SP16 ★	❑ **[Preset speed 16]** See page 75.	0 to 500 Hz	100 Hz

★ These parameters only appear if the corresponding function has been selected in another menu. When the parameters can also be accessed and set from within the configuration menu for the corresponding function, their description is detailed in these menus, on the pages indicated, to aid programming.

[SETTINGS] (SEt-) menu

Code	Description	Adjustment range	Factory setting
CL1	❑ **[Current Limitation]**	0.25 to 1.5 In (1)	1.5 In (1)

CAUTION

RISK OF DAMAGE TO THE MOTOR AND THE DRIVE

- Check that the motor will withstand this current, particularly in the case of permanent magnet synchronous motors, which are susceptible to demagnetization.
- Check that the profile mission complies with the derating curve given in the installation manual.

Failure to follow these instructions can result in equipment damage.

Used to limit the torque and the temperature rise of the motor.

CL2	❑ **[I Limit. 2 value]**	0.25 to 1.5 In (1)	1.5 In (1)

CAUTION

RISK OF DAMAGE TO THE MOTOR AND THE DRIVE

- Check that the motor will withstand this current, particularly in the case of permanent magnet synchronous motors, which are susceptible to demagnetization.
- Check that the profile mission complies with the derating curve given in the installation manual.

Failure to follow these instructions can result in equipment damage.

★ Parameter is only visible if [Current limit 2] (LC2) is not set to [No] (nO), page 86.

tLS	❑ **[Low speed time out]**	0 to 999.9 s	0 (no time limit)

After operating at [Low speed] (LSP) for a given time, the motor is stopped automatically. The motor restarts if the frequency reference is greater than the [Low speed] (LSP) and if a run command is still present.
Note: Value 0 corresponds to an unlimited period.

rSL	❑ **[PID wake up thresh.]**	0 to 100%	0%

⚠ DANGER

UNINTENDED EQUIPMENT OPERATION

- Check that unintended restarts will not present any danger.

Failure to follow these instructions will result in death or serious injury

★ Parameter is only visible if [PID feedback ass.] (PIF) is not set to [No] (nO), page 81.
If the "PI" and "Low speed operating time" [Low speed time out] (tLS) functions, page 38, are configured at the same time, the PI regulator may attempt to set a speed lower than [Low speed] (LSP).
This results in unsatisfactory operation, which consists of starting, operating at [Low speed] (LSP), then stopping, and so on.
The [PID wake up thresh.] (rSL) parameter (restart error threshold) is used to set a minimum PID error threshold for restarting after a stop at prolonged [Low speed] (LSP).
The function is inactive if [Low speed time out] (tLS) = 0.

(1) In corresponds to the nominal drive current indicated in the Installation Manual and on the drive nameplate.

★ These parameters only appear if the corresponding function has been selected in another menu. When the parameters can also be accessed and set from within the configuration menu for the corresponding function, their description is detailed in these menus, on the pages indicated, to aid programming.

[SETTINGS] (SEt-) menu

Code	Description	Adjustment range	Factory setting
UFr2 ★	❑ **[IR compensation 2]**	0 to 100%	20%
	For [U/F mot.2 selected] (UFt2) = [SVC] (n) or [Energy sav.] (nLd): IR compensation. For [U/F mot.2 selected] (UFt2) = [Cst. torque] (L) or [Var. torque] (P): voltage boost. Used to optimize the torque at very low speed (increase [IR compensation 2] (UFr2) if the torque is insufficient). Check that the value for [IR compensation 2] (UFr2) is not too high when the motor is in a hot state otherwise some instabilities can occur. Changing [U/F mot.2 selected] (UFt2) will cause [IR compensation 2] (UFr2) to return to its factory setting (20%).		
FLG2 ★	❑ **[FreqLoopGain 2]**	0 to 100%	20%
	Parameter can only be accessed if [U/F mot.2 selected] (UFT2) = [SVC] (n) or [Energy sav.] (nLd), page 88. The [FreqLoopGain 2] (FLG2) parameter adjusts the drive's ability to follow the speed ramp on the basis of the inertia of the machine being driven. Too high a gain may result in operating instability. 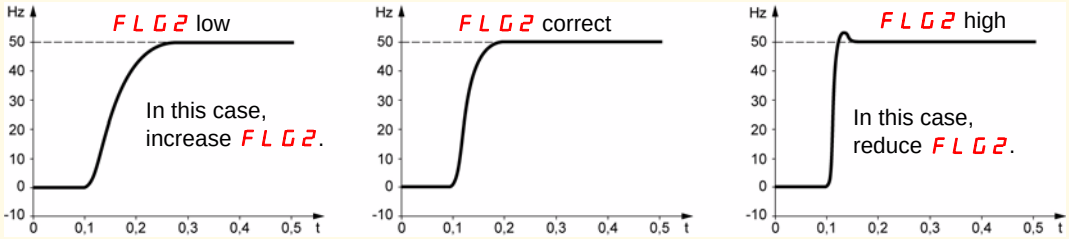		
StA2 ★	❑ **[Freq. loop stability 2]**	0 to 100%	20%
	Parameter can only be accessed if [U/F mot.2 selected] (UFT2) = [SVC] (n) or [Energy sav.] (nLd) , page 88. Used to adapt the return to steady state after a speed transient (acceleration or deceleration), according to the dynamics of the machine. Gradually increase the stability to avoid any overspeed. 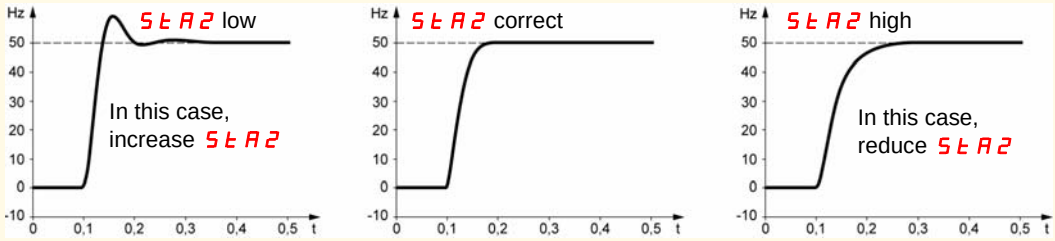		
SLP2 ★	❑ **[Slip compensation 2]**	0 to 150%	100%
	Parameter can only be accessed if [U/F mot.2 selected] (UFT2) = [SVC] (n) or [Energy sav.] (nLd), page 88. Adjusts the slip compensation around the value set by the nominal motor speed. The speeds given on motor rating plates are not necessarily exact. • If slip setting < actual slip: The motor is not rotating at the correct speed in steady state. • If slip setting > actual slip: The motor is overcompensated and the speed is unstable.		
Ftd	❑ **[Freq. threshold]**	0 to 500 Hz	bFr
	Threshold beyond which the contact on the relay ([R1 Assignment] (r1) or [R2 Assignment] (r2) = [Freq.Th.att.] (FtA)) closes or output AOV = 10 V ([Analog./logic output] (dO) = [Freq. limit] (FtA)).		
ttd	❑ **[Motor therm. level]**	1 to 118%	100%
	Threshold beyond which the contact on the relay ([R1 Assignment] (r1) or [R2 Assignment] (r2) = [Th.mot. att.] (tSA)) closes or output AOV = 10 V ([Analog./logic output] (dO) = [Drv thermal] (tSA)).		
Ctd	❑ **[Current threshold]**	0 to 1.5 In (1)	In (1)
	Threshold beyond which the contact on the relay ([R1 Assignment] (r1) or [R2 Assignment] (r2) = [I attained] (CtA)) closes or output AOV = 10 V ([Analog./logic output] (dO) = [Current limit] (CtA)).		

(1) In corresponds to the nominal drive current indicated in the Installation Manual and on the drive nameplate.

★ These parameters only appear if the corresponding function has been selected in another menu. When the parameters can also be accessed and set from within the configuration menu for the corresponding function, their description is detailed in these menus, on the pages indicated, to aid programming.

[SETTINGS] (SEt-) menu

Code	Description	Adjustment range	Factory setting
SdS	❑ **[Scale factor display]**	0.1 to 200	30
	Used to display a value in proportion to the output frequency [Output frequency] (rFr): the machine speed, the motor speed, etc. • If [Scale factor display] (SdS) ⩽ 1, [Cust. output value] (SPd1) is displayed (possible definition = 0.01) • If 1 < [Scale factor display] (SdS) ⩽ 10, [Cust. output value] (SPd2) is displayed (possible definition = 0.1) • If [Scale factor display] (SdS) > 10, [Cust. output value] (SPd3) is displayed (possible definition = 1) • If [Scale factor display] (SdS) > 10 and [Scale factor display] (SdS) x [Output frequency] (rFr) > 9,999: the display will show [Cust. output value] (SPd3) = $\frac{\text{[Scale factor display] (SdS) x [Output frequency] (rFr)}}{1000}$ to 2 decimal places example: for 24,223, display will show 24.22 - If [Scale factor display] (SdS) > 10 and [Scale factor display] (SdS) x [Output frequency] (rFr) > 65,535, display locked at 65.54 Example: Display motor speed for 4-pole motor, 1,500 rpm at 50 Hz (synchronous speed): [Scale factor display] (SdS) = 30 [Cust. output value] (SPd3) = 1,500 at [Output frequency] (rFr) = 50 Hz		
SFr	❑ **[Switching freq.]** (1)	2.0 to 16 kHz	4 kHz
	Parameter can also be accessed in the [MOTOR CONTROL] (drC-) menu. The frequency can be adjusted to reduce the noise generated by the motor. If the frequency has been set to a value higher than 4 kHz, in the event of excessive temperature rise, the drive will automatically reduce the switching frequency and increase it again once the temperature has returned to normal.		

(1) Parameter can also be accessed in the [MOTOR CONTROL] (drC-) menu.

[MOTOR CONTROL] (drC-) menu

efesotomasyon.com

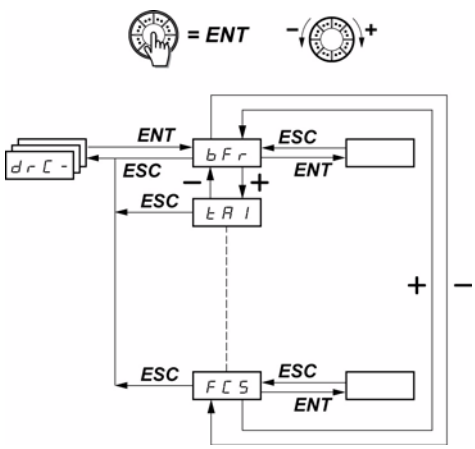

Standard motor frequency

Return to factory settings/Restore configuration

With the exception of [Auto tuning] (tUn), which can power up the motor, parameters can only be changed in stop mode, with no run command present.

On the optional ATV31 remote display terminal, this menu can be accessed with the switch in the position.

Drive performance can be optimized by:
- Entering the values given on the motor rating plate in the Drive menu
- Performing an auto-tune operation (on a standard asynchronous motor)

Code	Description	Adjustment range	Factory setting
bFr 50 60	❑ **[Standard mot. freq]** [50Hz IEC] (50): 50 Hz: IEC [60Hz NEMA] (60): 60 Hz: NEMA This parameter modifies the presets of the following parameters: [High speed] (HSP), page 33, [Freq. threshold] (Ftd), page 39, [Rated motor freq.] (FrS), page 41, and [Max frequency] (tFr), page 44.		[50Hz IEC] (50)
UnS	❑ **[Rated motor volt.]** Nominal motor voltage given on the rating plate. When the line voltage is lower than the nominal motor voltage, set [Rated motor volt.] (UnS) to the same value as the line voltage for the drive terminals. ATV312●●●M2: 100 to 240 V ATV312●●●M3: 100 to 240 V ATV312●●●N4: 100 to 500 V ATV312●●●S6: 100 to 600 V	In accordance with the drive rating	In accordance with the drive rating
FrS	❑ **[Rated motor freq.]** Nominal motor frequency marked on the rating plate. The factory setting is 50 Hz, or 60 Hz if [Standard mot. freq] (bFr) is set to 60 Hz. **Note:** The ratio $\frac{\text{[Rated motor volt.] (UnS) (in volts)}}{\text{[Rated motor freq.] (FrS) (in Hz)}}$ must not exceed the following values: ATV312●●●M2: 7 max. ATV312●●●M3: 7 max. ATV312●●●N4: 14 max. ATV312●●●S6: 17 max. The factory setting is 50 Hz, or preset to 60 Hz if [Standard mot. freq] (bFr) is set to 60 Hz.	10 to 500 Hz	50 Hz
nCr	❑ **[Rated mot. current]** Nominal motor current given on the rating plate.	0.25 to 1.5 In (1)	In accordance with the drive rating

(1) In corresponds to the nominal drive current indicated in the Installation Manual and on the drive nameplate.

[MOTOR CONTROL] (drC-) menu

Code	Description	Adjustment range	Factory setting
nSP	❑ **[Rated motor speed]** 0 to 9,999 rpm then 10.00 to 32.76 krpm If, rather than the nominal speed, the nameplate indicates the synchronous speed and the slip in Hz or as a %, calculate the nominal speed as follows: • Nominal speed = synchronous speed x $\frac{100 - \text{slip as a \%}}{100}$ or • Nominal speed = synchronous speed x $\frac{50 - \text{slip in Hz}}{50}$ (50 Hz motors) or • Nominal speed = synchronous speed x $\frac{60 - \text{slip in Hz}}{60}$ (60 Hz motors)	0 to 32,760 rpm	In accordance with the drive rating
COS	❑ **[Motor 1 Cosinus Phi]** Motor Cos Phi given on the motor rating plate	0.5 to 1	In accordance with the drive rating
rSC nO InIt 8888	❑ **[Cold stator resist.]** ☐ [No] (nO): function inactive. For applications which do not require high performance or do not tolerate automatic auto-tuning (passing a current through the motor) each time the drive is powered up. ☐ [Init] (InIt): activates the function. To improve low-speed performance whatever the thermal state of the motor. ☐ Value of cold state stator resistance used, in mΩ. **Note:** • **It is strongly recommended that this function is activated for mechanical handling applications.** • The function should only be activated [Init] (InIt) when the motor is cold. • When [Cold stator resist.] (rSC) = [Init] (InIt), the [Auto-tuning] (tUn) parameter is forced to [Power on] (POn). At the next run command the stator resistance is measured with an auto-tune. The [Cold stator resist.] (rSC) then changes to a value of (8888) and maintains it, [Auto-tuning] (tUn) is still forced to [Power on] (POn). The [Cold stator resist.] (rSC) parameter remains at [Init] (InIt) as long as the measurement has not been performed. • Value 8888 can be forced or changed using the jog dial (1).		[No] (nO)

(1) Procedure:
- Check that the motor is cold.
- Disconnect the cables from the motor terminals.
- Measure the resistance between 2 of the motor terminals (U. V. W.) without modifying its connection.
- Use the jog dial to enter half the measured value.
- Increase the factory setting of [IR compensation] (UFr), page 33, to 100% rather than 20%.

Note: Do not use [Cold stator resist.] (rSC) if it is not set to [No] (nO) or = [Power on] (POn) with catch on the fly ([CATCH ON THE FLY] (FLr-), page 93).

[MOTOR CONTROL] (drC-) menu

Code	Description	Adjustment range	Factory setting
tUn	❑ **[Auto tuning]**		[No] (nO)

⚠⚠ DANGER

HAZARD OF ELECTRIC SHOCK, EXPLOSION, OR ARC FLASH

- During auto-tuning the motor operates at nominal current.
- Do not work on the motor during auto-tuning.

Failure to follow these instructions will result in death or serious injury.

⚠ WARNING

LOSS OF CONTROL

- It is essential that the **[Rated motor volt.] (UnS)**, **[Rated motor freq.] (FrS)**, **[Rated motor freq.] (nCr)**, **[Rated motor speed] (nSP)** , **[Motor 1 Cosinus Phi.] (COS)** parameters are configured correctly before starting auto-tuning.
- When one or more parameters have been changed after auto-tuning has been performed, **[Auto-tuning] (tUn)** will return **[No] (nO)** and the procedure will have to be repeated.

Failure to follow these instructions will result in death, serious injury, or equipment damage.

nO ❑ [No] (nO): Auto-tuning not performed

YES ❑ [Yes] (YES): Auto-tuning is performed as soon as possible, then the parameter automatically changes to [Done] (dOnE) or [No] (nO) in the event that Auto-tuning is not successful [AUTO TUNING FAULT] (tnF) is displayed if [Autotune fault mgt] (tnL) = [Yes] (YES), page 95).

dOnE ❑ [Done] (dOnE): Use of the values given the last time auto-tuning was performed

rUn ❑ [Drv running] (rUn): Auto-tuning is performed every time a run command is sent.

POn ❑ [Power on] (POn): Auto-tuning is performed on every power-up.

LI1 to LI6 ❑ [LI1] to [LI16] (LI1) to (LI6): Auto-tuning is performed on the transition from 0 → 1 of a logic input assigned to this function.

⚠⚠ DANGER

HAZARD OF ELECTRIC SHOCK OR ARC FLASH

When **[Auto tuning] (tUn)** is set **[Power on] (POn)**, Auto tune will be performed every time the power will be switched on.

- Check this action will not endanger personnel or equipment in any way.

Failure to follow these instructions will result in death or serious injury.

Note:
[Auto-tuning] (tUn) is forced to [Power on] (POn) if [Cold stator resist.] (rSC) = [Init] (InIt).
Auto-tuning is only performed if no command has been activated. If a "freewheel stop" or "fast stop" function is assigned to a logic input, this input must be set to 1 (active at 0).
Auto-tuning may take 1 to 2 seconds. Do not interrupt the process. Wait for the display to change to [Done] (dOnE) or [No] (nO).

tUS	❑ **[Auto tuning state]**		[Not done] (tAb)

(For information only, cannot be modified)

tAb ❑ [Not done] (tAb): The default stator resistance value is used to control the motor.

PEnd ❑ [Pending] (PEnd): Auto-tuning has been requested but not yet performed.

PrOG ❑ [In Progress] (PrOG): Auto-tuning in progress.

FAIL ❑ [Failed] (FAIL): Auto-tuning was unsuccessful.

dOnE ❑ [Done] (dOnE): The stator resistance measured by the auto-tuning function is used to control the motor.

Strd ❑ [Entered R1] (Strd): The cold state stator resistance ([Cold stator resist.] (rSC) which is not set to [No] (nO)) is used to control the motor.

[MOTOR CONTROL] (drC-) menu

Code	Description	Adjustment range	Factory setting
UFt L P n nLd	❑ **[U/F mot 1 selected]** ☐ [Cst. torque] (L): Constant torque for motors connected in parallel or special motors. ☐ [Var. torque] (P): Variable torque for pump and fan applications. ☐ [SVC] (n): Sensorless flux vector control for constant torque applications. ☐ [Energy sav.] (nLd): Energy saving, for variable torque applications not requiring high dynamics (behaves in a similar way to the [Var. torque] (P) ratio with no load and the [SVC] (n) ratio on load). Voltage 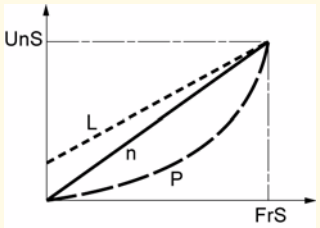 Frequency		[SVC] (n)
nrd YES nO	❑ **[Noise reduction]** ☐ [Yes] (YES): Frequency with random modulation. ☐ [No] (nO): Fixed frequency. Random frequency modulation helps to prevent any resonance which may occur at a fixed frequency.		[Yes] (YES)
SFr	❑ **[Switching freq.]** (1) The frequency can be adjusted to reduce the noise generated by the motor. If the frequency has been set to a value higher than 4 kHz, in the event of excessive temperature rise, the drive will automatically reduce the switching frequency and increase it again once the temperature has returned to normal.	2.0 to 16 kHz	4 kHz
tFr	❑ **[Max frequency]** The factory setting is 60 Hz, or preset to 72 Hz if [Standard mot. freq] (bFr) is set to 60 Hz.	10 to 500 Hz	60 Hz
SrF nO YES	❑ **[Speed loop filter]** ☐ [No] (nO): The speed loop filter is active (helps to prevent the reference being exceeded). ☐ [Yes] (YES): The speed loop filter is suppressed (in position control applications, this reduces the response time and the reference may be exceeded). 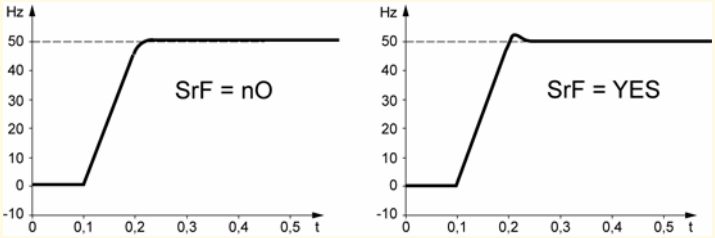 		[No] (nO):

(1) Parameter can also be accessed in the [SETTINGS] (SEt-) menu.

[MOTOR CONTROL] (drC-) menu

Code	Description	Adjustment range	Factory setting
SCS nO Str1 2 s	❑ **[Saving config.]** ☐ [No] (nO): Function inactive ☐ [Config 1] (Str1): Saves the current configuration (but not the result of auto-tuning) to EEPROM. [Saving config.] (SCS) automatically switches to [No] (nO) as soon as the save has been performed. This function is used to keep another configuration in reserve, in addition to the current configuration. When drives leave the factory the current configuration and the backup configuration are both initialized with the factory configuration. • If the ATV31 remote display terminal option is connected to the drive, the following additional selection options will appear: [File 1] (FIL1), [File 2] (FIL2), [File 3] (FIL3), [File 4] (FIL4) (files available in the remote display terminal's EEPROM memory for saving the current configuration). They can be used to store between 1 and 4 different configurations which can also be stored on or even transferred to other drives of the same rating. [Saving config.] (SCS) automatically switches to [No] (nO) as soon as the save has been performed.	(1)	[No] (nO)
CFG 2 s	❑ **[Macro configuration]** **⚠ DANGER** **UNINTENDED EQUIPMENT OPERATION** Check that the selected macro configuration is compatible with the wiring diagram used. **Failure to follow these instructions will result in death or serious injury.** Choice of source configuration. ☐ [Start/Stop] (StS): Start/stop configuration Identical to the factory configuration apart from the I/O assignments: • Logic inputs: - LI1, LI2 (reversing): 2-wire transition detection control, LI1 = run forward, LI2 = run reverse - LI3 to LI6: Inactive (not assigned) • Analog inputs: - AI1: Speed reference 0-10 V - AI2, AI3: Inactive (not assigned) • Relay R1: The contact opens in the event of a detected fault (or drive off). • Relay R2: Inactive (not assigned) • Analog output AOC: 0-20 mA, inactive (not assigned) ☐ [Factory set.] (Std): Factory configuration (see page 11). **Note:** The assignment of [Macro configuration] (CFG) results directly in a return to the selected configuration.	(1)	[Factory set.] (Std)
StS			
Std			

(1) [Saving config.] (SCS), [Macro configuration] (CFG), and [Restore config.] (FCS) can be accessed from several configuration menus, but they apply to all menus and parameters.
(2) Parameter can also be accessed in the [SETTINGS] (SEt-) menu.

2 s The jog dial (ENT) needs to be pressed and held down (for 2 s) to change the assignment for this parameter.

[MOTOR CONTROL] (drC-) menu

Code	Description	Adjustment range	Factory setting
FCS	❑ [Restore config.]	(1)	[No] (nO)

2 s

⚠ DANGER

UNINTENDED EQUIPMENT OPERATION

Check that the changes made to the current configuration are compatible with the wiring diagram used.

Failure to follow these instructions will result in death or serious injury.

nO ☐ [No] (nO): Function inactive.

rEC1 ☐ [Internal 1] (rEC1): The current configuration becomes identical to the backup configuration previously saved by [Saving config.] (SCS) = [Config 1] (Str1).
[Internal 1] (rEC1) is only visible if the backup has been carried out. [Restore config.] (FCS) automatically switches to [No] (nO) as soon as this action has been performed.

InI ☐ [Factory Set.] (InI): The current configuration is replaced by the configuration selected by the [Macro configuration] (CFG) parameter (2). [Restore config.] (FCS) automatically switches to [No] (nO) as soon as this action has been performed.
If the ATV31 remote display terminal option is connected to the drive (3), the following additional selection options appear, as long as the corresponding files in the remote display terminal's EEPROM memory have been loaded (0 to 4 files): [File 1] (FIL1), [File 2] (FIL2), [File 3] (FIL3), [File 4] (FIL4). They enable the current configuration to be replaced with one of the 4 configurations that may be loaded on the remote display terminal.
[Restore config.] (FCS) automatically switches to [No] (nO) as soon as this action has been performed.
Note: If nAd appears on the display briefly before the parameter switches to [No] (nO), this means that the configuration transfer is not possible and has not been performed (different drive ratings, for example). If ntr appears on the display briefly before the parameter switches to [No] (nO), this means that an invalid configuration transfer has occurred and that the factory settings will need to be restored using [Factory Set.] (InI).
In both cases, check the configuration to be transferred before trying again.

(1) [Saving config.] (SCS), [Macro configuration] (CFG), and [Restore config.] (FCS) can be accessed from several configuration menus, but they apply to all menus and parameters.

(2) The following parameters are not modified by this function; they retain their configuration:
- [Standard mot. freq] (bFr), page 41
- [HMI command] (LCC), page 61
- [PIN code 1] (COd), (terminal access code), page 103
- The parameters in the [COMMUNICATION] (COM-) menu
- The parameters in the [MONITORING] (SUP-) menu

(3) Options [File 1] (FIL1) to [File 4] (FIL4) continue to be displayed on the drive, even after the ATV31 remote terminal has been disconnected.

2 s The jog dial (ENT) needs to be pressed and held down (for 2 s) to change the assignment for this parameter.

[INPUTS / OUTPUTS CFG] (I-O-) menu

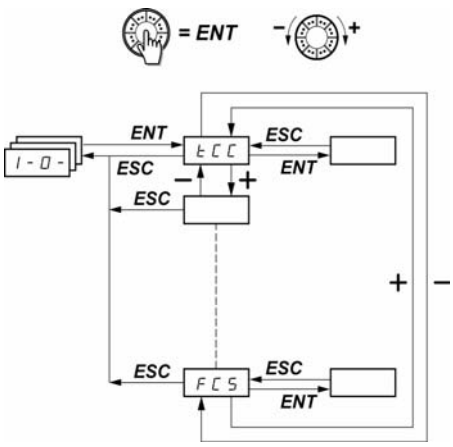

2-wire/3-wire control

Return to factory settings/Restore configuration

The parameters can only be modified when the drive is stopped and no run command is present.
On the optional ATV31 remote display terminal, this menu can be accessed with the switch in the position.

Code	Description	Adjustment range	Factory setting
tCC 2 s	❑ **[2/3 wire control]** See page 30.		[2 wire] (2C)
tCt	❑ **[2 wire type]** **⚠ DANGER** **UNINTENDED EQUIPMENT OPERATION** Check that the changes made to 2-wire control are compatible with the wiring diagram used. **Failure to follow these instructions will result in death or serious injury.** Parameter can be accessed if [2/3 wire control] (tCC) = [2 wire] (2C), page 47. LEL ☐ [Level] (LEL): State 0 or 1 is taken into account for run or stop. trn ☐ [Transition] (trn): A change of state (transition or edge) is necessary to initiate operation, in order to help prevent accidental restarts after a break in the power supply. PFO ☐ [Fwd priority] (PFO): State 0 or 1 is taken into account for run or stop, but the "forward" input takes priority over the "reverse" input.		[Transition] (trn)

2 s The jog dial (ENT) needs to be pressed and held down (for 2 s) to change the assignment for this parameter.

[INPUTS / OUTPUTS CFG] (I-O-) menu

rEF-
SEt-
drC-
I-O-
CtL-
FUn-
FLt-
COM-
SUP-

Code	Description	Adjustment range	Factory setting
rrS nO LI1 LI2 LI3 LI4 LI5 LI6	❑ **[Reverse assign.]** If [Reverse assign.] (rrS) = [No] (nO), run reverse remains active by means of negative voltage on AI2, for example. ☐ [No] (nO): Not assigned ☐ [LI1] (LI1): Logic input LI1 ☐ [LI2] (LI2): Logic input LI2 can be accessed if [2/3 wire control] (tCC) = [2 wire] (2C), page 47. ☐ [LI3] (LI3): Logic input LI3 ☐ [LI4] (LI4): Logic input LI4 ☐ [LI5] (LI5): Logic input LI5 ☐ [LI6] (LI6): Logic input LI6		[LI2] (LI2)
CrL3	❑ **[AI3 min. value]**	0 to 20 mA	4 mA
CrH3	❑ **[AI3 max. value]**	4 to 20 mA	20 mA
	These two parameters are used to configure the input for 0-20 mA, 4-20 mA, 20-4 mA, etc. Frequency 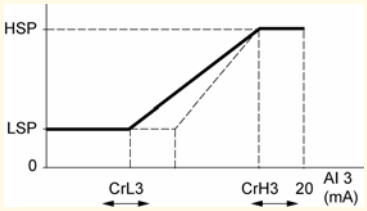 Example: 20 - 4 mA Frequency 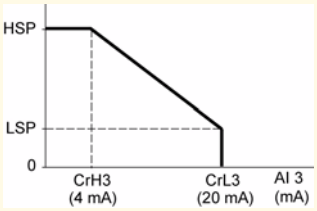 		
AO1t OA 4A 10U	❑ **[AO1 Type]** This parameter is not visible when a communication card is connected to the product. ☐ [Current] (0A): 0 - 20 mA configuration (use terminal AOC) ☐ [Cur. 4-20] (4A): 4 - 20 mA configuration (use terminal AOC) ☐ [Voltage] (10U): 0 - 10 V configuration (use terminal AOV)		[Current](0A)
dO nO OCr OFr Otr OPr FLt rUn FtA FLA CtA SrA tSA bLC APL	❑ **[Analog./logic output]** This parameter is not visible when a communication card is connected to the product. ☐ [No] (nO): Not assigned ☐ [I motor] (OCr): Motor current. 20 mA or 10 V corresponds to twice the nominal drive current. ☐ [Motor freq.] (OFr): Motor frequency. 20 mA or 10 V corresponds to the maximum frequency [Max frequency] (tFr), page 44. ☐ [Motor torq.] (Otr): Motor torque. 20 mA or 10 V corresponds to twice the nominal motor torque. ☐ [P. supplied] (OPr): Power supplied by the drive. 20 mA or 10 V corresponds to twice the nominal drive power. Making the following assignments (1) will transform the analog output to a logic output (see diagram in the Installation Manual): ☐ [Drive fault] (FLt): Fault detected ☐ [Drv running] (rUn): Drive running ☐ [Freq. limit] (FtA): Frequency threshold reached ([Freq. threshold] (Ftd) parameter in the [SETTINGS] (SEt-) menu, page 39) ☐ [HSP limit] (FLA): [High speed] (HSP) reached ☐ [I attained] (CtA): Current threshold reached ([Current threshold] (Ctd) parameter in the [SETTINGS] (SEt-) menu, page 39) ☐ [Freq. ref.] (SrA): Frequency reference reached ☐ [Drv thermal] (tSA): Motor thermal threshold reached ([Motor therm. level] (ttd) parameter in the [SETTINGS] (SEt-) menu, page 39) ☐ [Brake seq] (bLC): Brake sequence (for information, as this assignment can only be activated or deactivated from the [APPLICATION FUNCT.] (FUn-) menu, page 85) ☐ [No 4-20mA] (APL): Loss of 4-20 mA signal, even if [4-20mA loss] (LFL) = [No] (nO), page 95 The logic output is in state 1 (24 V) when the selected assignment is active, with the exception of [Drive fault] (FLt) (state 1 if the drive operation is normal). **Note:** (1) With these assignments, **configure** [AO1 Type] (AO1t) **=** [Current] (OA)**.**		[No] (nO)

[INPUTS / OUTPUTS CFG] (I-O-) menu

Code	Description	Adjustment range	Factory setting
r1	❑ **[R1 Assignment]** This parameter is not visible when a communication card is connected to the product. ☐ [No] (nO): Not assigned ☐ [No drive flt] (FLt): No drive detected fault ☐ [Drv running] (rUn): Drive running ☐ [Freq.Th.att.] (FtA): Frequency threshold reached ([Freq. threshold] (Ftd) parameter in the [SETTINGS] (SEt-) menu, page 39) ☐ [HSP attain.] (FLA): [High speed] (HSP) reached ☐ [I attained] (CtA): Current threshold reached ([Current threshold] (Ctd) parameter in the [SETTINGS] (SEt-) menu, page 39) ☐ [Freq.ref.att] (SrA): Frequency reference reached ☐ [Th.mot. att.] (tSA): Motor thermal threshold reached ([Motor therm. level] (ttd) parameter in the [SETTINGS] (SEt-) menu, page 39) ☐ [4-20mA] (APL): Loss of 4-20 mA signal, even if [4-20mA loss] (LFL) = [No] (nO), page 95 ☐ [LI1] to [LI6] (LI1) to (LI6): Returns the value of the selected logic input The relay is energized when the selected assignment is active, with the exception of [No drive flt] (FLt) (energized if the drive has not detected a fault).	nO FLt rUn FtA FLA CtA SrA tSA APL LI1 to LI6	[No drive flt] (FLt)
r2	❑ **[R2 Assignment]** ☐ [No] (nO): Not assigned ☐ [No drive flt] (FLt): No drive detected fault ☐ [Drv running] (rUn): Drive running ☐ [Freq.Th.att.] (FtA): Frequency threshold reached ([Freq. threshold] (Ftd) parameter in the [SETTINGS] (SEt-) menu, page 39) ☐ [HSP attain.] (FLA): [High speed] (HSP) reached ☐ [I attained] (CtA): Current threshold reached ([Current threshold] (Ctd) parameter in the [SETTINGS] (SEt-) menu, page 39) ☐ [Freq.ref.att] (SrA): Frequency reference reached ☐ [Th.mot. att.] (tSA): Motor thermal threshold reached ([Motor therm. level] (ttd) parameter in the [SETTINGS] (SEt-) menu, page 39) ☐ [Brk control] (bLC): Brake sequence (for information, as this assignment can only be activated or deactivated from the [APPLICATION FUNCT.] (FUn-) - menu, page 85) ☐ [4-20mA] (APL): Loss of 4-20 mA signal, even if [4-20mA loss] (LFL) = [No] (nO), page 95 ☐ [LI1] to [LI6] (LI1)to (LI6): Returns the value of the selected logic input The relay is energized when the selected assignment is active, with the exception of [No drive flt] (FLt) (energized if the drive has not detected a fault).	nO FLt rUn FtA FLA CtA SrA tSA bLC APL LI1 to LI6	[No] (nO)
SCS ⌛ 2 s	❑ **[Saving config.]** (1) See page 45.		nO
CFG ⌛ 2 s	❑ **[Macro configuration]** (1) See page 45.		Std
FCS ⌛ 2 s	❑ **[Restore config.]** (1) See page 46.		nO

(1) [Saving config.] (SCS), [Macro configuration] (CFG), and [Restore config.] (FCS) can be accessed from several configuration menus, but they apply to all menus and parameters.

⌛ 2 s The jog dial (ENT) needs to be pressed and held down (for 2 s) to change the assignment for this parameter.

[COMMAND] (CtL-) menu

efesotomasyon.com

rEF-
SEt-
drC-
I-O-
CtL-
FUn-
FLt-
COM-
SUP-

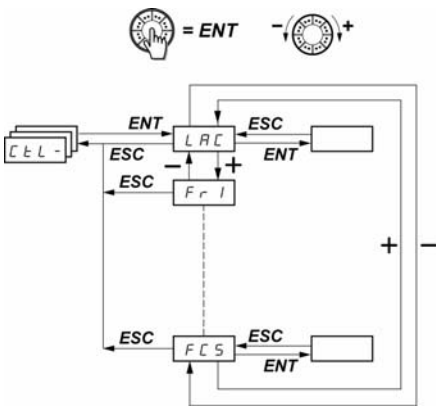

Function access level

Return to factory settings/Restore configuration

The parameters can only be modified when the drive is stopped and no run command is present.
On the optional remote display terminal, this menu can be accessed with the switch in the 🔓 position.

Control and reference channels

Run commands (forward, reverse, etc.) and references can be sent using the following channels:

Command CMD	Reference rFr
tEr: Terminals (LI.)	AIx: Terminals
LCC: Remote display terminal (RJ45 socket)	LCC: ATV312 keypad or remote display terminal
LOC: Control via the keypad	AIV1: Jog dial
Mdb: Modbus (RJ45 socket)	Mdb: Modbus (RJ45 socket)
nEt: Network	nEt: Network

The [ACCESS LEVEL] (LAC) parameter in the [COMMAND] (CtL-) menu, page 58, can be used to select priority modes for the control and reference channels. It has 3 function levels:

- [ACCESS LEVEL] (LAC) [Level 1] (L1): = Basic functions. The channels are managed in order of priority.
- [ACCESS LEVEL] (LAC) [Level 2] (L2): = Provides the option of additional functions compared with [Level 1] (L1):
  - +/- speed (motorized jog dial)
  - Brake control
  - 2nd current limit switching
  - Motor switching
  - Management of limit switches
- [ACCESS LEVEL] (LAC) [Level 3] (L3): = Same functions as with [Level 2] (L2). Management of the control and reference channels is configurable.

[COMMAND] (CtL-) menu

These channels can be combined in order of priority if [ACCESS LEVEL] (LAC) = [Level 1] (L1) or [Level 2] (L2).

Highest priority to lowest priority: Forced local mode, Network, Modbus, Remote display terminal, Terminals/Keypad (from right to left in the diagram below)

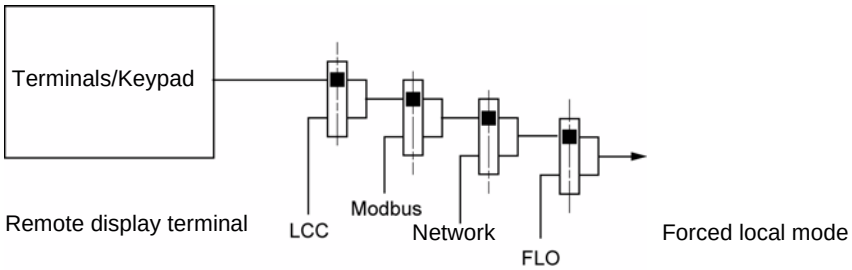

See the detailed block diagrams on pages 53 and 54.

- On ATV312 drives, in factory settings mode, control and reference are managed by the terminals.
- With a remote terminal display, if [HMI command] (LCC) = [Yes] (YES) ([COMMAND] (CtL-) menu), control and reference are managed by the remote terminal display (reference via [HMI Frequency ref.] (LFr) in the [SETTINGS] (SEt-) menu).

The channels can be combined by configuration if [ACCESS LEVEL] (LAC) = [Level 3] (L3).

Combined control and reference ([Profile] (CHCF) parameter = [Not separ.] (SIM)):

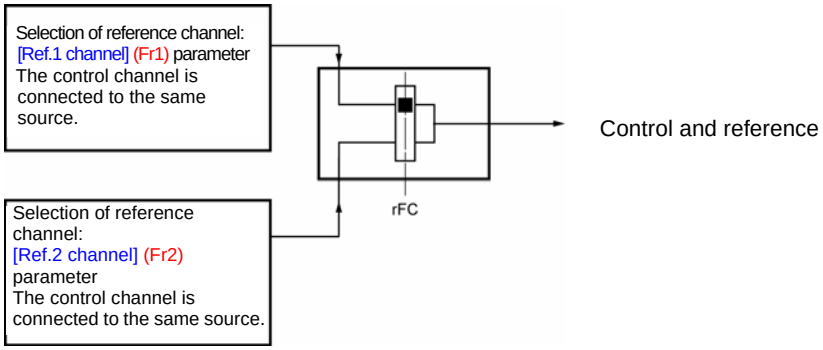

The [Ref. 2 switching] (rFC) parameter can be used to select the [Ref.1 channel] (Fr1) or [Ref.2 channel] (Fr2) channel, or to configure a logic input or a control word bit for remote switching of either one.
See the detailed block diagrams on pages 55 and 57.

[COMMAND] (CtL-) menu

Separate control and reference ([Profile] (CHCF) parameter = [Separate] (SEP)):

Reference

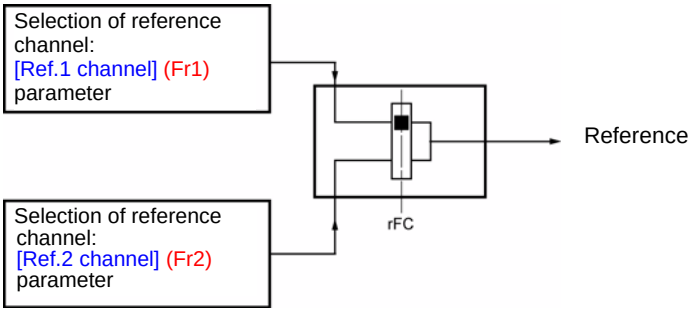

The [Ref. 2 switching] (rFC) parameter can be used to select the [Ref.1 channel] (Fr1) or [Ref.2 channel] (Fr2) channel, or to configure a logic input or a control word bit for remote switching of either one.

Control

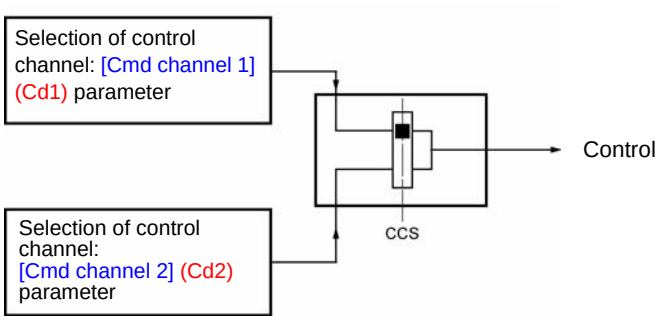

The [Cmd switching] (CCS) parameter, page 60, can be used to select the [Cmd channel 1] (Cd1) or [Cmd channel 2] (Cd2) channel, or to configure a logic input or a control bit for remote switching of either one.

See the detailed block diagrams on pages 55 and 56.

[COMMAND] (CtL-) menu

Reference channel for [ACCESS LEVEL] (LAC) = [Level 1] (L1) or [Level 2] (L2)

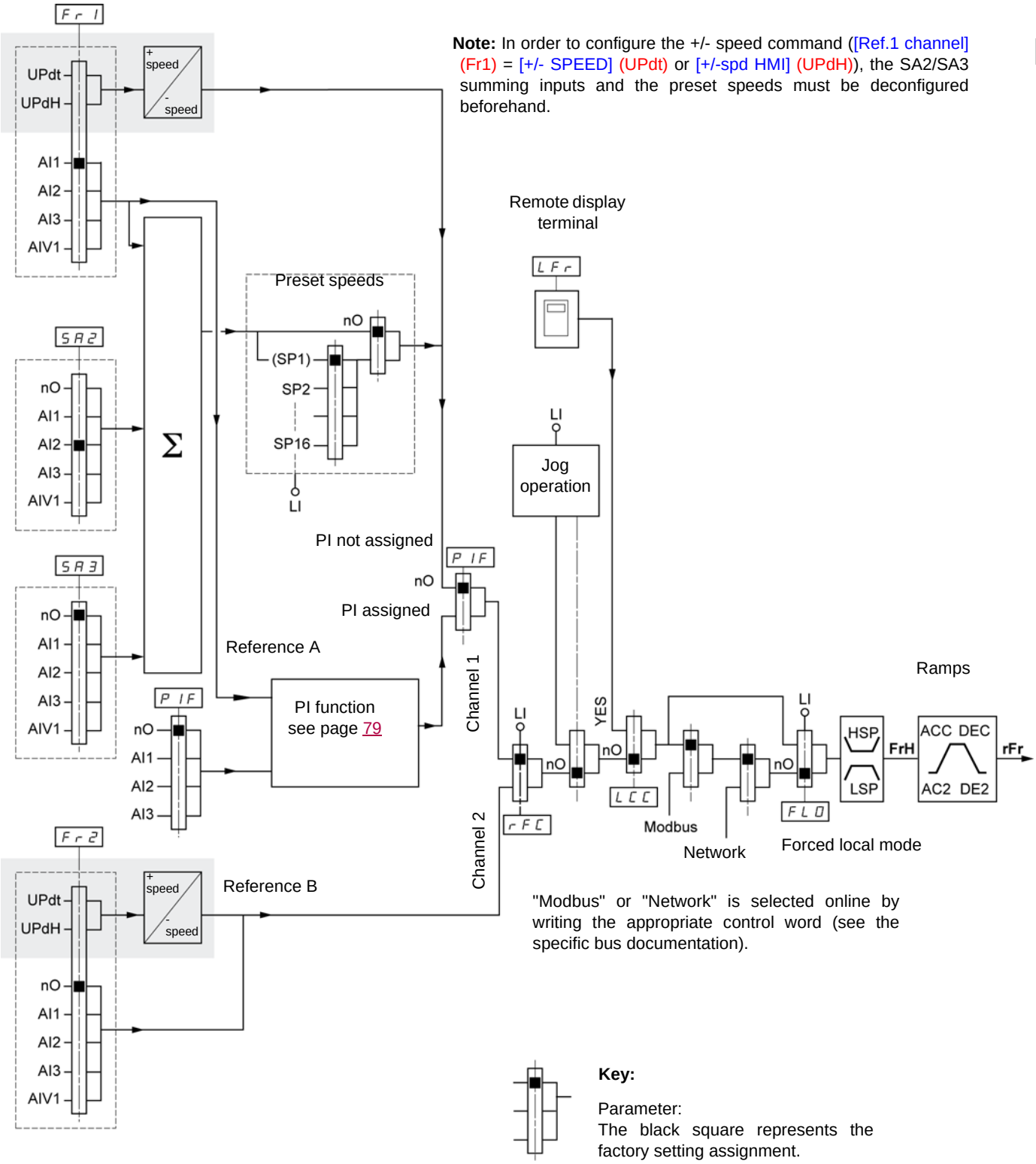

Note: In order to configure the +/- speed command ([Ref.1 channel] (Fr1) = [+/- SPEED] (UPdt) or [+/-spd HMI] (UPdH)), the SA2/SA3 summing inputs and the preset speeds must be deconfigured beforehand.

"Modbus" or "Network" is selected online by writing the appropriate control word (see the specific bus documentation).

Key:

Parameter:
The black square represents the factory setting assignment.

Function can be accessed for [ACCESS LEVEL] (LAC) = [Level 2] (L2)

[COMMAND] (CtL-) menu

Control channel for [ACCESS LEVEL] (LAC) = [Level 1] (L1) or [Level 2] (L2)

The [Forced local assign.] (FLO) parameter, page 99, the [HMI command] (LCC) parameter, page 61, and the selection of the Modbus bus or network are common to the reference and control channels.
Example: If [HMI command] (LCC) = [Yes] (YES), the command **and** reference are given by the remote display terminal.

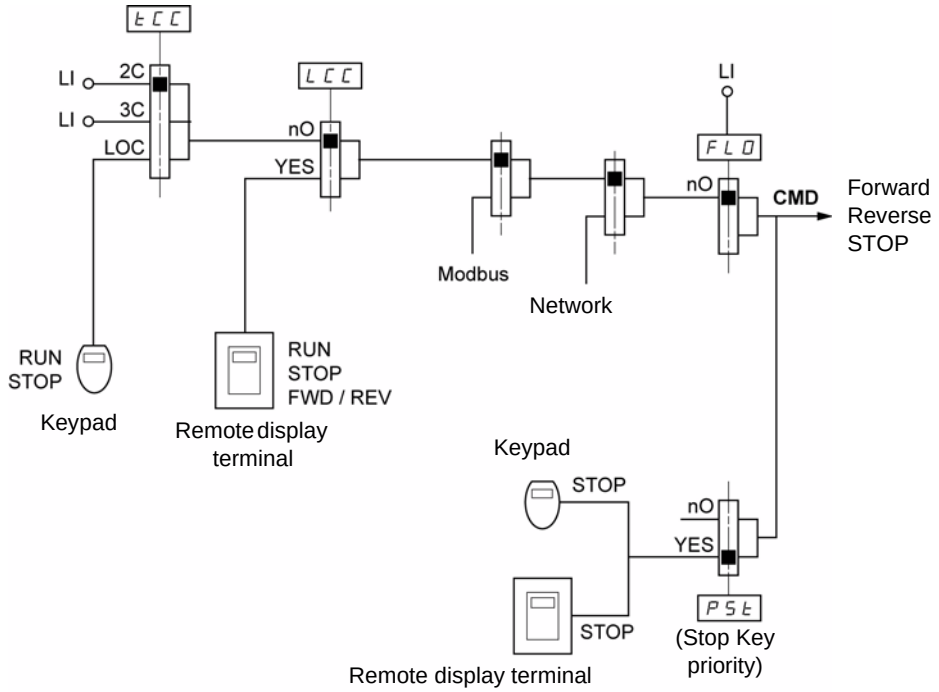

Key:

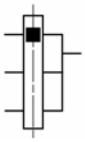

Parameter:
The black square represents the factory setting assignment

[COMMAND] (CtL-) menu

Reference channel for [ACCESS LEVEL] (LAC) = [Level 3] (L3)

Note: In order to configure the +/- speed command ([Ref.1 channel] (Fr1) = [+/- SPEED] (UPdt) or [+/-spd HMI] (UPdH)), the SA2/SA3 summing inputs and the preset speeds must be deconfigured beforehand.

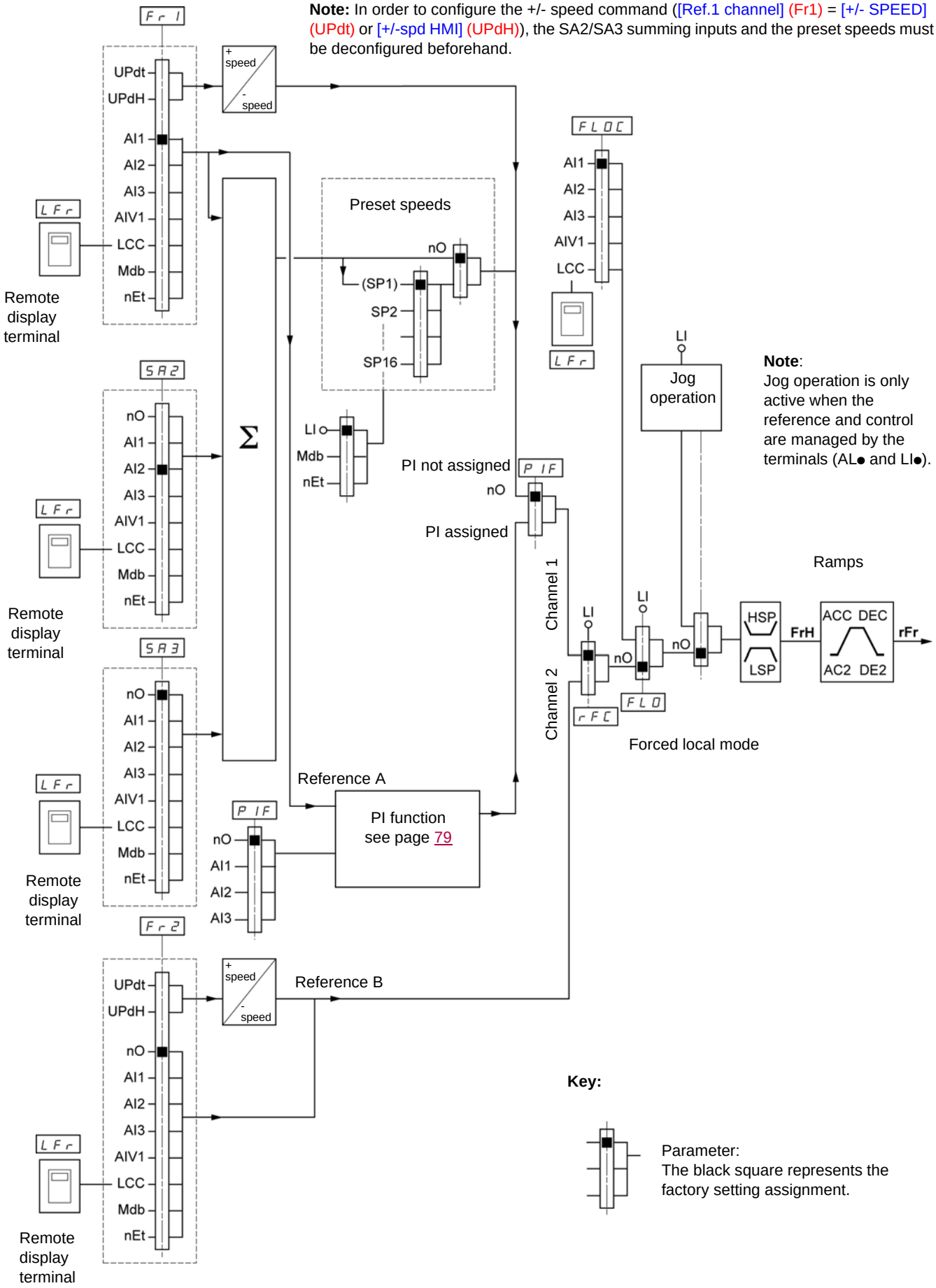

Note:
Jog operation is only active when the reference and control are managed by the terminals (AL● and LI●).

[COMMAND] (CtL-) menu

Control channel for [ACCESS LEVEL] (LAC) = [Level 3] (L3)

Combined reference and control

The [Ref.1 channel] (Fr1) parameter, page 58, the [Ref.2 channel] (Fr2) parameter, page 58, the [Ref. 2 switching] (rFC) parameter, page 59, the [Forced local assign.] (FLO) parameter, page 99, and the [Forced local Ref.] (FLOC) parameter, page 99, are common to reference and control. The control channel is therefore determined by the reference channel.

Example: If the [Ref.1 channel] (Fr1) reference = [AI1] (AI1) (analog input at the terminals), control is via LI (logic input at the terminals).

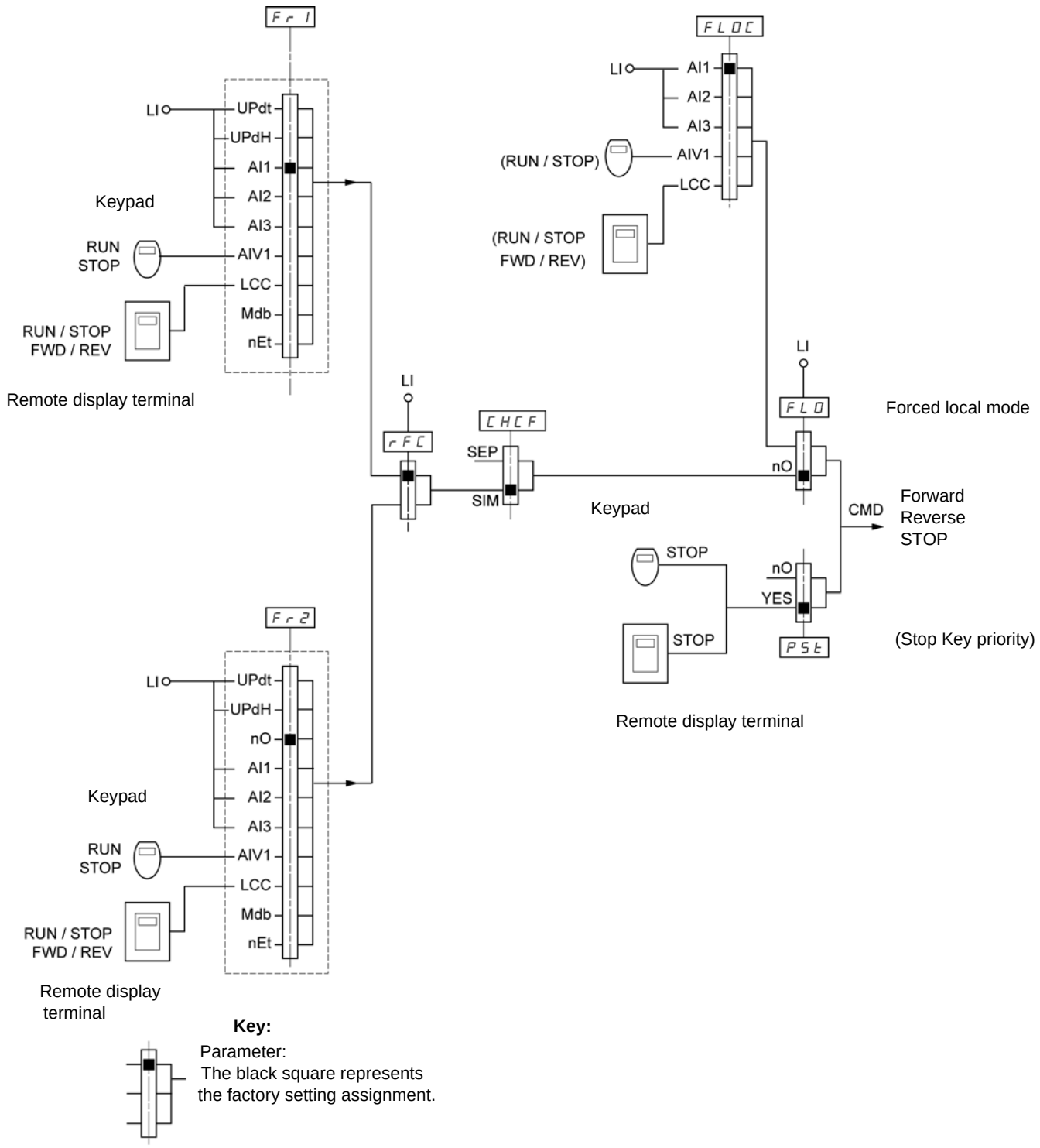

[COMMAND] (CtL-) menu

Control channel for [ACCESS LEVEL] (LAC) = [Level 3] (L3)

Mixed mode (separate reference and control)

The [Forced local assign.] (FLO) parameter, page 99, and the [Forced local Ref.] (FLOC) parameter, page 99, are common to reference and control.
Example: If the reference is in forced local mode via [AI1] (AI1) (analog input at the terminals), control in forced local mode is via LI (logic input at the terminals).

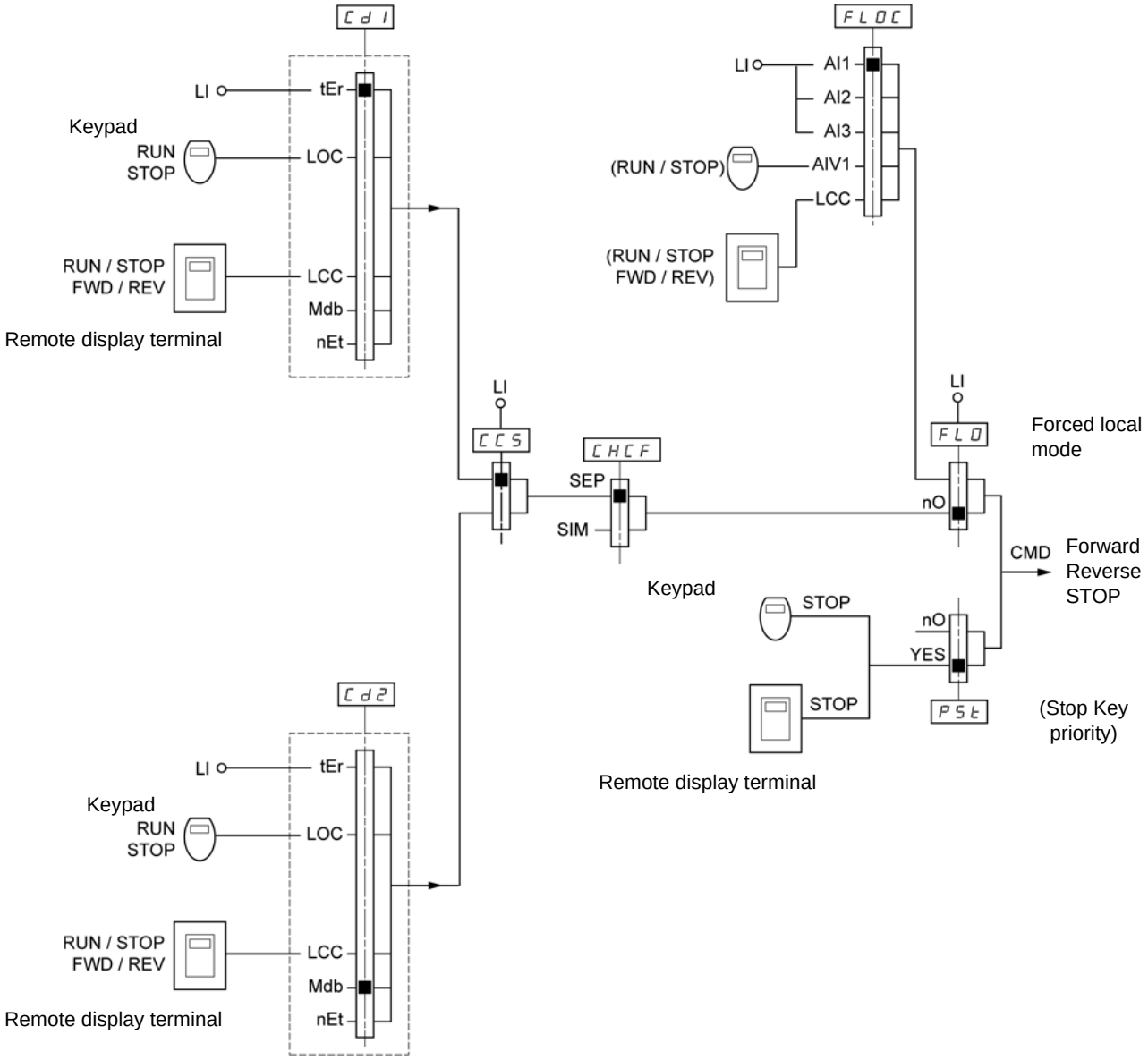

Key:

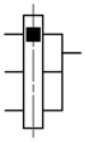

Parameter:
The black square represents
the factory setting assignment.

[COMMAND] (CtL-) menu

Note: There may be an incompatibility between functions (see the incompatibility table, page 21). In this case, the first function configured will prevent the remainder being configured.

Code	Description	Adjustment range	Factory setting
LAC	❑ **[ACCESS LEVEL]**		[Level 1] (L1)
2 s	**⚠ DANGER** **UNINTENDED EQUIPMENT OPERATION** • Assigning **[ACCESS LEVEL] (LAC)** to **[Level 3] (L3)** will restore the factory settings of the **[Ref.1 channel] (Fr1)** parameter, page 58, the **[Cmd channel 1] (Cd1)** parameter, page 59, the **[Profile] (CHCF)** parameter, page 59, and the **[2/3 wire control] (tCC)** parameter, page 47. • **[Level 3] (L3)** can only be restored to **[Level 2] (L2)** or **[Level 1] (L1)**, and **[Level 2] (L2)** can only be restored to **[Level 1] (L1)** by means of a "factory setting" via **[Restore config.] (FCS)**, page 46. • Check that this change is compatible with the wiring diagram used. **Failure to follow these instructions will result in death or serious injury.**		
L1	❑ [Level 1] (L1): Access to standard functions and channel management in order of priority.		
L2	❑ [Level 2] (L2):Access to advanced functions in the [APPLICATION FUNCT.] (FUn-) menu: - - +/- speed (motorized jog dial) - Brake control - 2nd current limit switching - Motor switching - Management of limit switches		
L3	❑ [Level 3] (L3): Access to advanced functions and management of mixed control modes		
Fr1	❑ **[Ref.1 channel]** See page 29.		[AI1] (AI1)
Fr2	❑ **[Ref.2 channel]**		[No] (nO)
nO	❑ [No] (nO): Not assigned		
AI1	❑ [AI1] (AI1): Analog input AI1		
AI2	❑ [AI2] (AI2): Analog input AI2		
AI3	❑ [AI3] (AI3): Analog input AI3		
AIU1	❑ [AI Virtual 1] (AIV1): Jog dial If [ACCESS LEVEL] (LAC) = [Level 2] (L2) or [Level 3] (L3), the following additional assignments are possible:		
UPdt	❑ [+/-Speed] (UPdt): (1) +/- speed reference via LI. See configuration page 78.		
UPdH	❑ [+/-spd HMI] (UPdH): (1) +/- speed reference via the jog dial on the ATV312 keypad. To use, display the frequency [Output frequency] (rFr), page 101. The +/- speed function via the keypad or the terminal is controlled from the [MONITORING] (SUP-) menu by selecting the [Output frequency] (rFr) parameter. If [ACCESS LEVEL] (LAC) = [Level 3] (L3), the following additional assignments are possible:		
LCC	❑ [HMI] (LCC): Reference via the remote display terminal, [HMI Frequency ref.] (LFr) parameter in the [SETTINGS] (SEt-) menu, page 32.		
Mdb	❑ [Modbus] (Mdb): Reference via Modbus		
nEt	❑ [Com. card] (nEt): Reference via network		

(1) NOTE:

- It is not possible to simultaneously assign [+/- SPEED] (UPdt) to [Ref.1 channel] (Fr1) or [Ref.2 channel] (Fr2), and [+/-spd HMI] (UPdH) to [Ref.1 channel] (Fr1) or [Ref.2 channel] (Fr2). Only one of the [+/- SPEED] (UPdt)/[+/-spd HMI] (UPdH) assignments is permitted on each reference channel.
- The +/- speed function in [Ref.1 channel] (Fr1) is incompatible with several functions (see page 21). It can only be configured if these functions are unassigned, in particular the summing inputs (set [Summing ref. 2] (SA2) to [No] (nO), page 71) and the preset speeds (set [2 preset speeds] (PS2) and [4 preset speeds] (PS4) to [No] (nO), page 73) which will have been assigned as part of the factory settings.
- In [Ref.2 channel] (Fr2), the +/- speed function is compatible with the preset speeds, summing inputs, and the PI regulator.

2 s The jog dial (ENT) needs to be pressed and held down (for 2 s) to change the assignment for this parameter.

[COMMAND] (CtL-) menu

Code	Description	Adjustment range	Factory setting
rFC	❑ **[Ref. 2 switching]**		[ch1 active] (Fr1)
	The [Ref. 2 switching] (rFC) parameter can be used to select the [Ref.1 channel] (Fr1) or [Ref.2 channel] (Fr2) channel, or to configure a logic input or a control word bit for remote switching of [Ref.1 channel] (Fr1) or [Ref.2 channel] (Fr2).		
Fr1	☐ [ch1 active] (Fr1): Reference = reference 1		
Fr2	☐ [ch1 active] (Fr2): Reference = reference 2		
LI1	☐ [LI1] (LI1): Logic input LI1		
LI2	☐ [LI2] (LI2): Logic input LI2		
LI3	☐ [LI3] (LI3): Logic input LI3		
LI4	☐ [LI4] (LI4): Logic input LI4		
LI5	☐ [LI5] (LI5): Logic input LI5		
LI6	☐ [LI6] (LI6): Logic input LI6		
	If [ACCESS LEVEL] (LAC) = [Level 3] (L3), the following additional assignments are possible:		
C111	☐ [C111] (C111): Bit 11 of Modbus control word		
C112	☐ [C112] (C112): Bit 12 of Modbus control word		
C113	☐ [C113] (C113): Bit 13 of Modbus control word		
C114	☐ [C114] (C114): Bit 14 of Modbus control word		
C115	☐ [C115] (C115): Bit 15 of Modbus control word		
C211	☐ [C211] (C211): Bit 11 of network control word		
C212	☐ [C212] (C212): Bit 12 of network control word		
C213	☐ [C213] (C213): Bit 13 of network control word		
C214	☐ [C214] (C214): Bit 14 of network control word		
C215	☐ [C215] (C215): Bit 15 of network control word		
	The reference can be switched with the drive running. [Ref.1 channel] (Fr1) is active when the logic input or control word bit is at state 0. [Ref.2 channel] (Fr2) is active when the logic input or control word bit is at state 1.		
CHCF	❑ **[Profile]** (control channels separated from reference channels)		[Not separ.] (SIM)
	Parameter can be accessed if [ACCESS LEVEL] (LAC) = [Level 3] (L3), page 58.		
SIM	☐ [Not separ.] (SIM): Combined		
SEP	☐ [Separate] (SEP): Separate		
Cd1	❑ **[Cmd channel 1]**		[Terminal] (tEr)
★	Parameter can be accessed if [Profile] (CHCF) = [Separate] (SEP), page 59, and [ACCESS LEVEL] (LAC) = [Level 3] (L3), page 58.		
tEr	☐ [Terminal] (tEr): Control via terminals		
LOC	☐ [Local] (LOC): Control via keypad		
LCC	☐ [Remot. HMI] (LCC): Control via remote display terminal		
Mdb	☐ [Modbus] (Mdb): Control via Modbus		
nEt	☐ [Com. card] (nEt): Control via the network		

★ These parameters only appear if the corresponding function has been selected in another menu. When the parameters can also be accessed and set from within the configuration menu for the corresponding function, their description is detailed in these menus, on the pages indicated, to aid programming.

[COMMAND] (CtL-) menu

Code	Description	Adjustment range	Factory setting
Cd2 ★ tEr LOC LCC Mdb nEt	❑ **[Cmd channel 2]** Parameter can be accessed if [Profile] (CHCF) = [Separate] (SEP), page 59, and [ACCESS LEVEL] (LAC) = [Level 3] (L3), page 58. ☐ [Terminal] (tEr): Control via terminals ☐ [Local] (LOC): Control via keypad ☐ [Remot. HMI] (LCC): Control via remote display terminal ☐ [Modbus] (Mdb): Control via Modbus ☐ [Com. card (nEt): Control via the network		[Modbus] (Mdb)
CCS ★ Cd1 Cd2 LI1 LI2 LI3 LI4 LI5 LI6 C111 C112 C113 C114 C115 C211 C212 C213 C214 C215	❑ **[Cmd switching]** Parameter can be accessed if [Profile] (CHCF) = [Separate] (SEP), page 59, and [ACCESS LEVEL] (LAC) = [Level 3] (L3), page 58. The [Cmd switching] (CCS) parameter can be used to select the [Cmd channel 1] (Cd1) or [Cmd channel 2] (Cd2) channel, or to configure a logic input or a control word bit for remote switching of [Cmd channel 1] (Cd1) or [Cmd channel 2] (Cd2). ☐ [ch1 active] (Cd1): Control channel = channel 1 ☐ [ch2 active] (Cd2): Control channel = channel 2 ☐ [LI1] (LI1): Logic input LI1 ☐ [LI2] (LI2): Logic input LI2 ☐ [LI3] (LI3): Logic input LI3 ☐ [LI4] (LI4): Logic input LI4 ☐ [LI5] (LI5): Logic input LI5 ☐ [LI6] (LI6): Logic input LI6 ☐ [C111] (C111): Bit 11 of Modbus control word ☐ [C112] (C112): Bit 12 of Modbus control word ☐ [C113] (C113): Bit 13 of Modbus control word ☐ [C114] (C114): Bit 14 of Modbus control word ☐ [C115] (C115): Bit 15 of Modbus control word ☐ [C211] (C211): Bit 11 of network control word ☐ [C212] (C212): Bit 12 of network control word ☐ [C213] (C213): Bit 13 of network control word ☐ [C214] (C214): Bit 14 of network control word ☐ [C215] (C215): Bit 15 of network control word Channel 1 is active when the input or control word bit is at state 0, Channel 2 is active when the input or control word bit is at state 1.		[ch1 active] (Cd1)
COP nO SP Cd ALL	❑ **[Copy channel 1<>2]** (copy only in this direction) **⚠ DANGER** **UNINTENDED EQUIPMENT OPERATION** Copying the command and/or reference can change the direction of rotation. • Check that this is safe. **Failure to follow these instructions will result in death or serious injury.** Parameter can be accessed if [ACCESS LEVEL] (LAC) = [Level 3] (L3), page 58. ☐ [No] (nO): No copy ☐ [Reference] (SP): Copy reference ☐ [Command] (Cd): Copy control ☐ [Cmd + ref.] (ALL): Copy control and reference • If channel 2 is controlled via the terminals, channel 1 control is not copied. • If the channel 2 reference is set via AI1, AI2, AI3 or AIU1, the channel 1 reference is not copied. • The reference copied is [Frequency ref.] (FrH) (before ramp), unless the channel 2 reference is set via +/- speed. In this case, the reference copied is [Output frequency] (rFr) (after ramp). **Note:** Copying the control and/or reference can change the direction of rotation.		[No] (nO)

★ These parameters only appear if the corresponding function has been selected in another menu. When the parameters can also be accessed and set from within the configuration menu for the corresponding function, their description is detailed in these menus, on the pages indicated, to aid programming.

[COMMAND] (CtL-) menu

efesotomasyon.com

Code	Description	Adjustment range	Factory setting
LCC nO YES	❑ **[HMI command]** Parameter can only be accessed using a remote display terminal, and for [ACCESS LEVEL] (LAC) = [Level 1] (L1) or [Level 2] (L2), page 58. ☐ [No] (nO): Function inactive ☐ [Yes] (YES): Enables control of the drive using the STOP/RESET, RUN and FWD/REV buttons on the display terminal. Here, the speed reference is given by the [HMI Frequency ref.] (LFr) parameter in the [SETTINGS] (SEt-) menu. Only the freewheel stop, fast stop and DC injection stop commands remain active on the terminals. If the drive/terminal connection is cut or if the terminal has not been connected, the drive detects a fault and locks in [MODBUS FAULT] (SLF).		[No] (nO)
PSt 2 s nO YES	❑ **[Stop Key priority]** This parameter can be used to activate or deactivate the stop button on the drive and the remote terminals. The stop button will be deactivated if the active control channel is different from that on the integrated display terminal or remote terminals. **⚠ WARNING** **LOSS OF CONTROL** You are going to disable the stop button located on the drive and remote display Do not select "**nO**" unless exterior stopping methods exist. **Failure to follow these instructions can result in death, serious injury, or equipment damage.** ☐ [No] (nO): Function inactive ☐ [Yes] (YES): STOP key priority		[Yes] (YES)
rOt dFr drS bOt	❑ **[Rotating direction]** This parameter is only visible if [Ref.1 channel] (Fr1), page 29, or [Ref.2 channel] (Fr2), page 58, are assigned to LCC or AI1. Direction of operation authorized for the RUN key on the keypad or the RUN key on the remote display terminal. ☐ [Forward] (dFr): Forward ☐ [Reverse] (drS): Reverse ☐ [Both] (bOt): Both directions are authorized.		[Forward] (dFr)
SCS 2 s	❑ **[Saving config.]** See page 45.	(1)	nO
CFG 2 s	❑ **[Macro configuration]** See page 45.	(1)	Std
FCS 2 s	❑ **[Restore config.]** See page 46.	(1)	nO

2 s The jog dial (ENT) needs to be pressed and held down (for 2 s) to change the assignment for this parameter.

(1) [Saving config.] (SCS), [Macro configuration] (CFG), and [Restore config.] (FCS) can be accessed from several configuration menus, but they apply to all menus and parameters.

[APPLICATION FUNCT.] (FUn-) menu

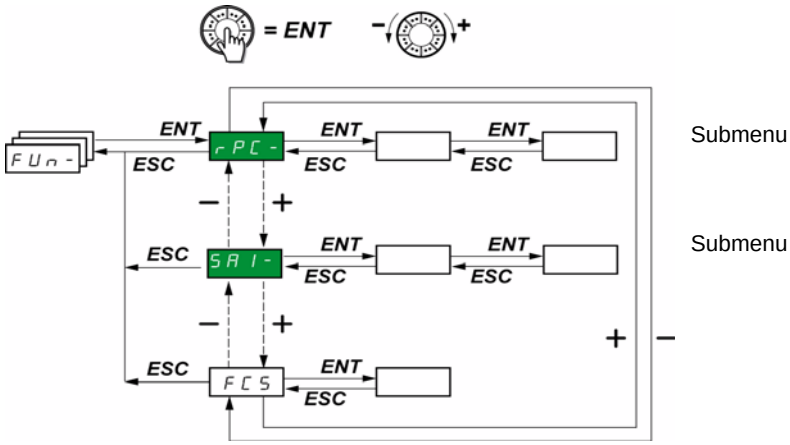

The parameters can only be modified when the drive is stopped and no run command is present.
On the optional remote display terminal, this menu can be accessed with the switch in the position.

Some functions have numerous parameters. In order to clarify programming and avoid having to scroll through endless parameters, these functions have been grouped in submenus.
Like menus, submenus are identified by a dash after their code: PSS- for example.

Note: There may be an incompatibility between functions (see the incompatibility table, page 21). In this case, the first function configured will prevent the remainder being configured.

Code	Name/Description	Adjustment range	Factory setting
rPC-	**[RAMPS]**		
rPt	**[Ramp type]**		[Linear] (LIn)

Defines the shape of the acceleration and deceleration ramps

- LIn ☐ [Linear] (LIn): Linear
- S ☐ [S ramp] (S): S ramp
- U ☐ [U ramp] (U): U ramp
- CUS ☐ [Customized] (CUS): Customized

S ramps

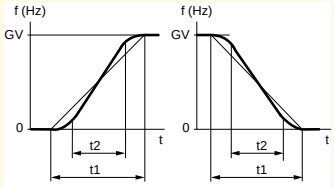

The rounding coefficient is fixed,
where t2 = 0.6 x t1
and t1 = set ramp time.

U ramps

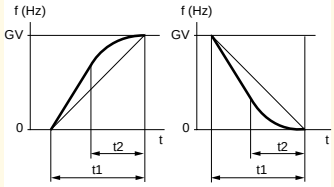

The rounding coefficient is fixed,
where t2 = 0.5 x t1
and t1 = set ramp time.

Customized ramps

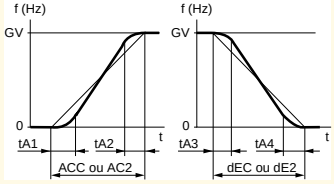

tA1: Adjustable from 0 to 100% (of ACC or AC2)
tA2: Adjustable from 0 to (100% - tA1) (of ACC or AC2)
tA3: Adjustable from 0 to 100% (of dEC or dE2)
tA4: Adjustable from 0 to (100% - tA3) (of dEC or dE2)

[APPLICATION FUNCT.] (FUn-) menu

Code	Name/Description	Adjustment range	Factory setting
rPC-	**[RAMPS]** (continued)		
tA1 ★	❑ **[Begin Acc round]** Parameter can be accessed if the [Ramp type] (rPt) = [Customized] (CUS), page 62.	0 to 100	10
tA2 ★	❑ **[End Acc round]** Parameter can be accessed if the [Ramp type] (rPt) = [Customized] (CUS), page 62.	0 to (100-tA1)	10
tA3 ★	❑ **[Begin Dec round]** Parameter can be accessed if the [Ramp type] (rPt) = [Customized] (CUS), page 62.	0 to 100	10
tA4 ★	❑ **[End Dec round]** Parameter can be accessed if the [Ramp type] (rPt) = [Customized] (CUS), page 62.	0 to (100-tA3)	10
Inr 0.01 0.1 1	❑ **[Ramp increment]** ☐ [0.01] (0.01): Ramp can be set between 0.05 s and 327.6 s. ☐ [0.1] (0.1): Ramp can be set between 0.1 s and 3,276 s. ☐ [1] (1): Ramp can be set between 1 s and 32,760 s (1). This parameter applies to the [Acceleration] (ACC), [Deceleration] (dEC), [Acceleration 2] (AC2), and [Deceleration 2] (dE2) parameters. **Note:** Changing the [Ramp increment] (Inr) parameter causes the settings for the [Acceleration] (ACC), [Deceleration] (dEC), [Acceleration 2] (AC2), and [Deceleration 2] (dE2) parameters to be modified as well.	0.01 - 0.1 - 1	0.1
ACC dEC	❑ **[Acceleration]** (2) ❑ **[Deceleration]** Defined to accelerate/decelerate between 0 and the nominal frequency [Rated motor freq.] (FrS) (parameter in the [MOTOR CONTROL] (drC-) menu). Check that the value for [Deceleration] (dEC) is not too low in relation to the load to be stopped.	In accordance with Inr, page 63	3 s 3 s

(1) When values higher than 9,999 are displayed on the drive or on the remote display terminal, a point is inserted after the thousands digit.
Note:
This type of display can lead to confusion between values which have two digits after a decimal point and values higher than 9,999. Check the value of the [Ramp increment] (Inr) parameter.
Example:
- If [Ramp increment] (Inr) = 0.01, the value 15.65 corresponds to a setting of 15.65 s.
- If [Ramp increment] (Inr) = 1, the value 15.65 corresponds to a setting of 15,650 s.

(2) Parameter can also be accessed in the [SETTINGS] (SEt-) menu.

★ These parameters only appear if the corresponding function has been selected in another menu. When the parameters can also be accessed and set from within the configuration menu for the corresponding function, their description is detailed in these menus, on the pages indicated, to aid programming.

[APPLICATION FUNCT.] (FUn-) menu

Code	Name/Description	Adjustment range	Factory setting
rPC-	**[RAMPS]** (continued)		
rPS	**[Ramp switch ass.]**		[No] (nO)

This function remains active regardless of the control channel.

- nO ☐ [No] (nO): Not assigned
- LI1 ☐ [LI1] (LI1): Logic input LI1
- LI2 ☐ [LI2] (LI2): Logic input LI2
- LI3 ☐ [LI3] (LI3): Logic input LI3
- LI4 ☐ [LI4] (LI4): Logic input LI4
- LI5 ☐ [LI5] (LI5): Logic input LI5
- LI6 ☐ [LI6] (LI6): Logic input LI6

If [ACCESS LEVEL] (LAC) = [Level 3] (L3), the following assignments are possible:

- CD11 ☐ [CD11] (CD11): Bit 11 of the control word from a communication network
- CD12 ☐ [CD12] (CD12): Bit 12 of the control word from a communication network
- CD13 ☐ [CD13] (CD13): Bit 13 of the control word from a communication network
- CD14 ☐ [CD14] (CD14): Bit 14 of the control word from a communication network
- CD15 ☐ [CD15] (CD15): Bit 15 of the control word from a communication network

[Acceleration] (ACC) and [Deceleration] (dEC) are enabled when the logic input or control word bit is at state 0. [Acceleration 2] (AC2) and [Deceleration 2] (dE2) are enabled when the logic input or control word bit is at state 1.

Frt	**[Ramp 2 threshold]**	0 to 500 Hz	0 Hz

The 2nd ramp is switched if [Ramp 2 threshold]] (Frt) is not 0 (the value 0 corresponds to the inactive function) and the output frequency is higher than [Ramp 2 threshold]] (Frt).
Threshold ramp switching can be combined with switching via LI or bit as follows:

LI or bit	Frequency	Ramp
0	<Frt	ACC, dEC
0	>Frt	AC2, dE2
1	<Frt	AC2, dE2
1	>Frt	AC2, dE2

AC2 ★	**[Acceleration 2]** (1)	In accordance with Inr, page 63	5

Parameter can be accessed if [Ramp 2 threshold] (Frt) > 0, page 64, or if [Ramp switch ass.] (rPS) is assigned, page 64.

dE2 ★	**[Deceleration 2]** (1)	In accordance with Inr, page 63	5

Parameter can be accessed if [Ramp 2 threshold] (Frt) > 0, page 64, or if [Ramp switch ass.] (rPS) is assigned, page 64.

brA	**[Dec ramp adapt.]**		[Yes] (YES)

Activating this function automatically adapts the deceleration ramp, if this has been set at too low a value for the inertia of the load.

- nO ☐ [No] (nO): Function inactive
- YES ☐ [Yes] (YES): Function active. The function is incompatible with applications requiring:
  - Positioning on a ramp
  - The use of a braking resistor (the resistor would not operate correctly)

[Dec ramp adapt.] (brA) is forced to [No] (nO) if brake control [Brake assignment] (bLC) is assigned, page 85.

(1) Parameter can also be accessed in the [SETTINGS] (SEt-) menu.

★ These parameters only appear if the corresponding function has been selected in another menu. When the parameters can also be accessed and set from within the configuration menu for the corresponding function, their description is detailed in these menus, on the pages indicated, to aid programming.

[APPLICATION FUNCT.] (FUn-) menu

Code	Name/Description	Adjustment range	Factory setting
StC-	**[STOP MODES]**		
Stt	**[Type of stop]** Stop mode on disappearance of the run command or appearance of a stop command. rMP [Ramp stop] (rMP): On ramp FSt [Fast stop] (FSt): Fast stop nST [Freewheel] (nST): Freewheel stop dCI [DC injection] (dCI): DC injection stop		[Ramp stop] (rMP)
FSt	**[Fast stop]** nO [No] (nO): Not assigned LI1 [LI1] (LI1): Logic input LI1 LI2 [LI2] (LI2): Logic input LI2 LI3 [LI3] (LI3): Logic input LI3 LI4 [LI4] (LI4): Logic input LI4 LI5 [LI5] (LI5): Logic input LI5 LI6 [LI6] (LI6): Logic input LI6 If [ACCESS LEVEL] (LAC) = [Level 3] (L3), the following assignments are possible: CD11 [CD11] (CD11): Bit 11 of the control word from a communication network CD12 [CD12] (CD12): Bit 12 of the control word from a communication network CD13 [CD13] (CD13): Bit 13 of the control word from a communication network CD14 [CD14] (CD14): Bit 14 of the control word from a communication network CD15 [CD15] (CD15): Bit 15 of the control word from a communication network The stop is activated when the logic state of the input changes to 0 and the control word bit changes to 1. The fast stop is a stop on a reduced ramp via the [Ramp divider] (dCF) parameter. If the input falls back to state 1 and the run command is still active, the motor will only restart if 2-wire level control has been configured [2/3 wire control] (tCC) = [2 wire] (2C), and [2 wire type] (tCt) = [Level] (LEL) or [Fwd priority] (PFO), page 47). In other cases, a new run command must be sent.		[No] (nO)

[APPLICATION FUNCT.] (FUn-) menu

rEF-
SEt-
drC-
I-O-
CtL-
FUn-
FLt-
COM-
SUP-

Code	Name/Description	Adjustment range	Factory setting
StC-	**[STOP MODES]** (continued)		
Stt	**[Type of stop]**		[Ramp stop] (rMP)
	Stop mode on disappearance of the run command or appearance of a stop command. ☐ [Ramp stop] (rMP): On ramp ☐ [Fast stop] (FSt): Fast stop ☐ [Freewheel] (nST): Freewheel stop ☐ [DC injection] (dCI): DC injection stop		
FSt	**[Fast stop]**		[No] (nO)
nO LI1 LI2 LI3 LI4 LI5 LI6	☐ [No] (nO): Not assigned ☐ [LI1] (LI1): Logic input LI1 ☐ [LI2] (LI2): Logic input LI2 ☐ [LI3] (LI3): Logic input LI3 ☐ [LI4] (LI4): Logic input LI4 ☐ [LI5] (LI5): Logic input LI5 ☐ [LI6] (LI6): Logic input LI6		
CD11 CD12 CD13 CD14 CD15	If [ACCESS LEVEL] (LAC) = [Level 3] (L3), the following assignments are possible: ☐ [CD11] (CD11): Bit 11 of the control word from a communication network ☐ [CD12] (CD12): Bit 12 of the control word from a communication network ☐ [CD13] (CD13): Bit 13 of the control word from a communication network ☐ [CD14] (CD14): Bit 14 of the control word from a communication network ☐ [CD15] (CD15): Bit 15 of the control word from a communication network		
	The stop is activated when the logic state of the input changes to 0 and the control word bit changes to 1. The fast stop is a stop on a reduced ramp via the [Ramp divider] (dCF) parameter. If the input falls back to state 1 and the run command is still active, the motor will only restart if 2-wire level control has been configured [2/3 wire control] (tCC) = [2 wire] (2C), and [2 wire type] (tCt) = [Level] (LEL) or [Fwd priority] (PFO), page 47). In other cases, a new run command must be sent.		
dCF ★	**[Ramp divider]**	0 to 10	4
	Parameter can be accessed where [Type of stop] (Stt) = [Fast stop] (FSt), page 66, and where [Fast stop] (FSt) is not [No] (nO), page 66. Ensure that the reduced ramp is not too low in relation to the load to be stopped. The value 0 corresponds to the minimum ramp.		

★ These parameters only appear if the corresponding function has been selected in another menu. When the parameters can also be accessed and set from within the configuration menu for the corresponding function, their description is detailed in these menus, on the pages indicated, to aid programming.

[APPLICATION FUNCT.] (FUn-) menu

Code	Name/Description	Adjustment range	Factory setting
StC-	■ **[STOP MODES]** (continued)		
dCI	❑ **[DC injection assign.]**		[No] (nO)

⚠ WARNING

NO HOLDING TORQUE

- DC injection braking does not provide any holding torque at zero speed.
- DC injection braking does not work when there is a loss of power or when the drive detects a fault.
- Where necessary, use a separate brake to maintain torque levels.

Failure to follow these instructions can result in death, serious injury, or equipment damage.

Note1: This function is incompatible with the "Brake control" function (see page 21).
Note2: The DC injection stop is not effective when the drive is stopped with the JOG function activated.

nO ☐ [No] (nO): Not assigned
LI1 ☐ [LI1] (LI1): Logic input LI1
LI2 ☐ [LI2] (LI2): Logic input LI2
LI3 ☐ [LI3] (LI3): Logic input LI3
LI4 ☐ [LI4] (LI4): Logic input LI4
LI5 ☐ [LI5] (LI5): Logic input LI5
LI6 ☐ [LI6] (LI6): Logic input LI6

If [ACCESS LEVEL] (LAC) = [Level 3] (L3), the following assignments are possible:

CD11 ☐ [CD11] (CD11): Bit 11 of the control word from a communication network
CD12 ☐ [CD12] (CD12): Bit 12 of the control word from a communication network
CD13 ☐ [CD13] (CD13): Bit 13 of the control word from a communication network
CD14 ☐ [CD14] (CD14): Bit 14 of the control word from a communication network
CD15 ☐ [CD15] (CD15): Bit 15 of the control word from a communication network

Braking is activated when the logic state of the input or control word bit is at 1.

IdC	❑ **[DC inject. level 1]**	(1)(3)	0 to In (2)	0.7 In (2)

CAUTION

RISK OF DAMAGE TO MOTOR

- Check that the motor will withstand this current without overheating.

Failure to follow these instructions can result in equipment damage.

★ Parameter can be accessed if [Type of stop] (Stt) = [DC injection] (dCI), page 66, or if [DC injection assign.] (dCI) is not set to [No] (nO), page 67.
After 5 seconds, the injection current is limited to 0.5 [Mot. therm. current] (ItH) if set to a higher value.

(1) Parameter can also be accessed in the [SETTINGS] (SEt-) menu.
(2) In corresponds to the nominal drive current indicated in the Installation Manual and on the drive nameplate.
(3) **Note:** These settings are not related to the "automatic standstill DC injection" function.

★ These parameters only appear if the corresponding function has been selected in another menu. When the parameters can also be accessed and set from within the configuration menu for the corresponding function, their description is detailed in these menus, on the pages indicated, to aid programming.

[APPLICATION FUNCT.] (FUn-) menu

Code	Name/Description	Adjustment range	Factory setting
StC-	■ **[STOP MODES]** (continued)		
tdC	❑ **[DC injection time 2]** (1)(3)	0.1 to 30 s	0.5 s
	CAUTION **RISK OF DAMAGE TO MOTOR** • Long periods of DC injection braking can cause overheating and damage the motor. • Protect the motor by avoiding long periods of DC injection braking. **Failure to follow these instructions can result in equipment damage.**		
★	Parameter can be accessed if [Type of stop] (Stt) = [DC injection] (dCI) , page 66.		
nSt	❑ **[Freewheel stop ass.]**		[No] (nO)
nO	☐ [No] (nO): Not assigned		
LI1	☐ [LI1] (LI1): Logic input LI1		
LI2	☐ [LI2] (LI2): Logic input LI2		
LI3	☐ [LI3] (LI3): Logic input LI3		
LI4	☐ [LI4] (LI4): Logic input LI4		
LI5	☐ [LI5] (LI5): Logic input LI5		
LI6	☐ [LI6] (LI6): Logic input LI6		
	The stop is activated when the logic state of the input is at 0. If the input falls back to state 1 and the run command is still active, the motor will only restart if 2-wire level control has been configured. In other cases, a new run command must be sent.		

(1) Parameter can also be accessed in the [SETTINGS] (SEt-) menu.
(2) In corresponds to the nominal drive current indicated in the Installation Manual and on the drive nameplate.
(3) **Note:** These settings are not related to the "automatic standstill DC injection" function.

★ These parameters only appear if the corresponding function has been selected in another menu. When the parameters can also be accessed and set from within the configuration menu for the corresponding function, their description is detailed in these menus, on the pages indicated, to aid programming.

[APPLICATION FUNCT.] (FUn-) menu

Code	Name/Description	Adjustment range	Factory setting
AdC-	**[AUTO DC INJECTION]**		
AdC	**[Auto DC injection]**		[Yes] (YES)

If set to [Continuous] (Ct), this parameter causes injection current to be generated, even when there is no run command. This is not compatible with [Auto tuning] (tUn) = [Drv running] (rUn). this parameter can be changed at any time.

DANGER

HAZARD OF ELECTRIC SHOCK, EXPLOSION, OR ARC FLASH

When **[Auto DC injection] (AdC)** = **[Continuous] (Ct)**, the injection of current is done even if a run command has not been sent.

- Check this action will not endanger personnel or equipment in any way

Failure to follow these instructions will result in death or serious injury.

WARNING

NO HOLDING TORQUE

- DC injection braking does not provide any holding torque at zero speed.
- DC injection braking does not work when there is a loss of power or when the drive detects a fault.
- Where necessary, use a separate brake to maintain torque levels.

Failure to follow these instructions can result in death, serious injury, or equipment damage.

nO ☐ [No] (nO): No injection
YES ☐ [Yes] (YES): Standstill injection for adjustable period
Ct ☐ [Continuous] (Ct): Continuous standstill injection

tdC1	**[Auto DC inj. time 1]**	(1)	0.1 to 30 s	0.5 s

CAUTION

RISK OF DAMAGE TO MOTOR

- Long periods of DC injection braking can cause overheating and damage the motor.
- Protect the motor by avoiding long periods of DC injection braking.

Failure to follow these instructions can result in equipment damage.

★ Parameter can be accessed if [Auto DC injection] (AdC) is not set to [No] (nO), page 69.

SdC1	**[Auto DC inj. level 1]**	(1)	0 to 1.2 In (2)	0.7 In (2)

CAUTION

RISK OF DAMAGE TO MOTOR

- Check that the motor will withstand this current without overheating.

Failure to follow these instructions can result in equipment damage.

★ Parameter can be accessed if [Auto DC injection] (AdC) is not set to [No] (nO), page 69.
Note: Check that the motor will withstand this current without overheating.

(1) Parameter can also be accessed in the [SETTINGS] (SEt-) menu.
(2) In corresponds to the nominal drive current indicated in the Installation Manual and on the drive nameplate.

★ These parameters only appear if the corresponding function has been selected in another menu. When the parameters can also be accessed and set from within the configuration menu for the corresponding function, their description is detailed in these menus, on the pages indicated, to aid programming.

[APPLICATION FUNCT.] (FUn-) menu

Code	Name/Description		Adjustment range	Factory setting
AdC-	**[AUTO DC INJECTION] (continued)**			
tdC2	❑ **[Auto DC inj. time 2]**	(1)	0 to 30 s	0 s
	CAUTION **RISK OF DAMAGE TO MOTOR** • Long periods of DC injection braking can cause overheating and damage the motor. • Protect the motor by avoiding long periods of DC injection braking. **Failure to follow these instructions can result in equipment damage.**			
★	Parameter can be accessed if [Auto DC injection] (AdC) is not set to [No] (nO), page 69.			
SdC2	❑ **[Auto DC inj. level 2]**	(1)	0 to 1.2 In (2)	0.5 In (2)
	CAUTION **RISK OF DAMAGE TO MOTOR** • Check that the motor will withstand this current without overheating. **Failure to follow these instructions can result in equipment damage.**			
★	Parameter can be accessed if [Auto DC injection] (AdC) is not set to [No] (nO), page 69.			

AdC	SdC2	Operation
YES	x	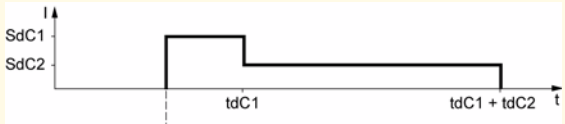
Ct	≠ 0	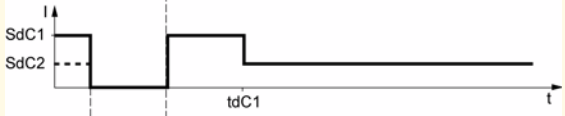
Ct	= 0	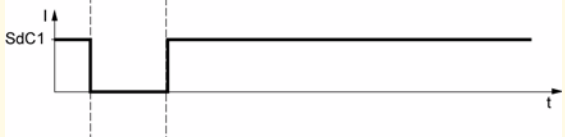
Run command		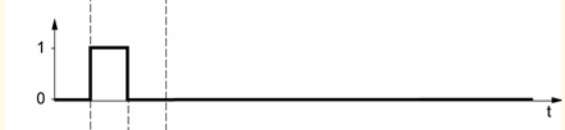
Speed		

(1) Parameter can also be accessed in the [SETTINGS] (SEt-) menu.
(2) In corresponds to the nominal drive current indicated in the Installation Manual and on the drive nameplate.

★ These parameters only appear if the corresponding function has been selected in another menu. When the parameters can also be accessed and set from within the configuration menu for the corresponding function, their description is detailed in these menus, on the pages indicated, to aid programming.

[APPLICATION FUNCT.] (FUn-) menu

Code	Name/Description	Adjustment range	Factory setting
SA1-	**[SUMMING INPUTS]** Can be used to sum one or two inputs to the [Ref.1 channel] (Fr1) reference only. **Note:** The "Summing inputs" function may be incompatible with other functions (see page 21).		
SA2	**[Summing ref. 2]**	[AI2] (AI2)	
nO	☐ [No] (nO): Not assigned		
AI1	☐ [AI1] (AI1): Analog input AI1		
AI2	☐ [AI2] (AI2): Analog input AI2		
AI3	☐ [AI3] (AI3): Analog input AI3		
AIU1	☐ [AI Virtual 1] (AIV1): Jog dial		
	If [ACCESS LEVEL] (LAC) = [Level 3] (L3), the following assignments are possible:		
LCC	☐ [HMI] (LCC): Reference via the remote display terminal, [HMI Frequency ref.] (LFr) parameter in the [SETTINGS] (SEt-) menu, page 32.		
Mdb	☐ [Modbus] (Mdb): Reference via Modbus		
nEt	☐ [Com. card] (nEt): Reference via network		
SA3	**[Summing ref. 3]**	[No] (nO)	
nO	☐ [No] (nO): Not assigned		
AI1	☐ [AI1] (AI1): Analog input AI1		
AI2	☐ [AI2] (AI2): Analog input AI2		
AI3	☐ [AI3] (AI3): Analog input AI3		
AIU1	☐ [AI Virtual 1] (AIV1): Jog dial		
	If [ACCESS LEVEL] (LAC) = [Level 3] (L3), the following assignments are possible:		
LCC	☐ [HMI] (LCC): Reference via the remote display terminal, [HMI Frequency ref.] (LFr) parameter in the [SETTINGS] (SEt-) menu, page 32.		
Mdb	☐ [Modbus] (Mdb): Reference via Modbus		
nEt	☐ [Com. card] (nEt): Reference via network		

Summing inputs

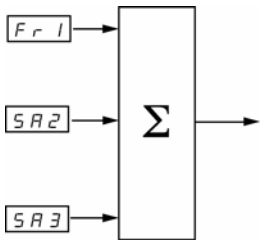

Note:
AI2 is a ± 10 V input which can be used for subtraction by summing a negative signal.

See the complete block diagrams on pages 53 and 55.

[APPLICATION FUNCT.] (FUn-) menu

Preset speeds

2, 4, 8 or 16 speeds can be preset, requiring 1, 2, 3 or 4 logic inputs respectively.

The following assignment order must be observed: [2 preset speeds] (PS2), then [4 preset speeds] (PS4), then [8 preset speeds] (PS8), then [16 preset speeds] (PS16).

Combination table for preset speed inputs

16 speeds LI (PS16)	8 speeds LI (PS8)	4 speeds LI (PS4)	2 speeds LI (PS2)	Speed reference
0	0	0	0	Reference (1)
0	0	0	1	SP2
0	0	1	0	SP3
0	0	1	1	SP4
0	1	0	0	SP5
0	1	0	1	SP6
0	1	1	0	SP7
0	1	1	1	SP8
1	0	0	0	SP9
1	0	0	1	SP10
1	0	1	0	SP11
1	0	1	1	SP12
1	1	0	0	SP13
1	1	0	1	SP14
1	1	1	0	SP15
1	1	1	1	SP16

(1) See the block diagrams on page 53 and page 55: Reference 1 = (SP1).

Note: If Fr1 = LCC and rPI= nO, then PI reference (%) = 10 * AI (Hz) / 15

[APPLICATION FUNCT.] (FUn-) menu

Code	Name/Description	Adjustment range	Factory setting
PSS-	**[PRESET SPEEDS]** **Note:** The "Preset speeds" function may be incompatible with other functions (see page 21).		
PS2	**[2 preset speeds]** Selecting the assigned logic input activates the function. nO ☐ [No] (nO): Not assigned LI1 ☐ [LI1] (LI1): Logic input LI1 LI2 ☐ [LI2] (LI2): Logic input LI2 LI3 ☐ [LI3] (LI3): Logic input LI3 LI4 ☐ [LI4] (LI4): Logic input LI4 LI5 ☐ [LI5] (LI5): Logic input LI5 LI6 ☐ [LI6] (LI6): Logic input LI6 If [ACCESS LEVEL] (LAC) = [Level 3] (L3), the following assignments are possible: Cd11 ☐ [CD11] (CD11): Bit 11 of the control word from a communication network Cd12 ☐ [CD12] (CD12): Bit 12 of the control word from a communication network Cd13 ☐ [CD13] (CD13): Bit 13 of the control word from a communication network Cd14 ☐ [CD14] (CD14): Bit 14 of the control word from a communication network Cd15 ☐ [CD15] (CD15): Bit 15 of the control word from a communication network		[LI3] (LI3)
PS4	**[4 preset speeds]** Selecting the assigned logic input activates the function. Ensure that [2 preset speeds] (PS2) has been assigned before assigning [4 preset speeds] (PS4). nO ☐ [No] (nO): Not assigned LI1 ☐ [LI1] (LI1): Logic input LI1 LI2 ☐ [LI2] (LI2): Logic input LI2 LI3 ☐ [LI3] (LI3): Logic input LI3 LI4 ☐ [LI4] (LI4): Logic input LI4 LI5 ☐ [LI5] (LI5): Logic input LI5 LI6 ☐ [LI6] (LI6): Logic input LI6 If [ACCESS LEVEL] (LAC) = [Level 3] (L3), the following assignments are possible: Cd11 ☐ [CD11] (CD11): Bit 11 of the control word from a communication network Cd12 ☐ [CD12] (CD12): Bit 12 of the control word from a communication network Cd13 ☐ [CD13] (CD13): Bit 13 of the control word from a communication network Cd14 ☐ [CD14] (CD14): Bit 14 of the control word from a communication network Cd15 ☐ [CD15] (CD15): Bit 15 of the control word from a communication network		[LI4] (LI4)
PS8	**[8 preset speeds]** Selecting the assigned logic input activates the function. Ensure that [4 preset speeds] (PS4) has been assigned before assigning [8 preset speeds] (PS8). nO ☐ [No] (nO): Not assigned LI1 ☐ [LI1] (LI1): Logic input LI1 LI2 ☐ [LI2] (LI2): Logic input LI2 LI3 ☐ [LI3] (LI3): Logic input LI3 LI4 ☐ [LI4] (LI4): Logic input LI4 LI5 ☐ [LI5] (LI5): Logic input LI5 LI6 ☐ [LI6] (LI6): Logic input LI6 If [ACCESS LEVEL] (LAC) = [Level 3] (L3), the following assignments are possible: Cd11 ☐ [CD11] (CD11): Bit 11 of the control word from a communication network Cd12 ☐ [CD12] (CD12): Bit 12 of the control word from a communication network Cd13 ☐ [CD13] (CD13): Bit 13 of the control word from a communication network Cd14 ☐ [CD14] (CD14): Bit 14 of the control word from a communication network Cd15 ☐ [CD15] (CD15): Bit 15 of the control word from a communication network		[No] (nO)

[APPLICATION FUNCT.] (FUn-) menu

Code	Name/Description		Adjustment range	Factory setting
PSS-	**[PRESET SPEEDS]** (continued)			
PS16	**[16 preset speeds]** Selecting the assigned logic input activates the function. Ensure that [8 preset speeds] (PS8) has been assigned before assigning [16 preset speeds] (PS16). nO ☐ [No] (nO): Not assigned LI1 ☐ [LI1] (LI1): Logic input LI1 LI2 ☐ [LI2] (LI2): Logic input LI2 LI3 ☐ [LI3] (LI3): Logic input LI3 LI4 ☐ [LI4] (LI4): Logic input LI4 LI5 ☐ [LI5] (LI5): Logic input LI5 LI6 ☐ [LI6] (LI6): Logic input LI6 If [ACCESS LEVEL] (LAC) = [Level 3] (L3), the following assignments are possible: Cd11 ☐ [CD11] (CD11): Bit 11 of the control word from a communication network Cd12 ☐ [CD12] (CD12): Bit 12 of the control word from a communication network Cd13 ☐ [CD13] (CD13): Bit 13 of the control word from a communication network Cd14 ☐ [CD14] (CD14): Bit 14 of the control word from a communication network Cd15 ☐ [CD15] (CD15): Bit 15 of the control word from a communication network			[No] (nO)
SP2 ★	**[Preset speed 2]**	(1)	0.0 to 500.0 Hz (2)	10 Hz
SP3 ★	**[Preset speed 3]**	(1)	0.0 to 500.0 Hz (2)	15 Hz
SP4 ★	**[Preset speed 4]**	(1)	0.0 to 500.0 Hz (2)	20 Hz
SP5 ★	**[Preset speed 5]**	(1)	0.0 to 500.0 Hz (2)	25 Hz
SP6 ★	**[Preset speed 6]**	(1)	0.0 to 500.0 Hz (2)	30 Hz
SP7 ★	**[Preset speed 7]**	(1)	0.0 to 500.0 Hz (2)	35 Hz
SP8 ★	**[Preset speed 8]**	(1)	0.0 to 500.0 Hz (2)	40 Hz
SP9 ★	**[Preset speed 9]**	(1)	0.0 to 500.0 Hz (2)	45 Hz
SP10 ★	**[Preset speed 10]**	(1)	0.0 to 500.0 Hz (2)	50 Hz

(1) Parameter can also be accessed in the [SETTINGS] (SEt-) menu. This parameter will depend on how many speeds have been configured.

(2) Reminder: The speed remains limited by the [High speed] (HSP) parameter, page 33.

★ These parameters only appear if the corresponding function has been selected in another menu. When the parameters can also be accessed and set from within the configuration menu for the corresponding function, their description is detailed in these menus, on the pages indicated, to aid programming.

[APPLICATION FUNCT.] (FUn-) menu

Code	Name/Description		Adjustment range	Factory setting
PSS-	■ [PRESET SPEEDS] (continued)			
SP11 ★	❑ [Preset speed 11]	(1)	0.0 to 500.0 Hz (2)	55 Hz
SP12 ★	❑ [Preset speed 12]	(1)	0.0 to 500.0 Hz (2)	60 Hz
SP13 ★	❑ [Preset speed 13]	(1)	0.0 to 500.0 Hz (2)	70 Hz
SP14 ★	❑ [Preset speed 14]	(1)	0.0 to 500.0 Hz (2)	80 Hz
SP15 ★	❑ [Preset speed 15]	(1)	0.0 to 500.0 Hz (2)	90 Hz
SP16 ★	❑ [Preset speed 16]	(1)	0.0 to 500.0 Hz (2)	100 Hz

(1) Parameter can also be accessed in the [SETTINGS] (SEt-) menu. This parameter will depend on how many speeds have been configured.

(2) Reminder: The speed remains limited by the [High speed] (HSP) parameter, page 33.

★ These parameters only appear if the corresponding function has been selected in another menu. When the parameters can also be accessed and set from within the configuration menu for the corresponding function, their description is detailed in these menus, on the pages indicated, to aid programming.

[APPLICATION FUNCT.] (FUn-) menu

Code	Name/Description	Adjustment range	Factory setting
JOG-	**[JOG]** **Note:** The "Jog operation" function may be incompatible with other functions (see page 21).		
JOG	**[JOG]** Selecting the assigned logic input activates the function. ☐ [No] (nO): Not assigned ☐ [LI1] (LI1): Logic input LI1 ☐ [LI2] (LI2): Logic input LI2 ☐ [LI3] (LI3): Logic input LI3 ☐ [LI4] (LI4): Logic input LI4 ☐ [LI5] (LI5): Logic input LI5 ☐ [LI6] (LI6): Logic input LI6 Example: 2-wire control operation ([2/3 wire control] (tCC) = [2 wire] (2C))	[No] (nO)	
JGF ★	**[Jog frequency]** (1) Parameter can be accessed if [JOG] (JOG) is not set to [No] (nO), page 76.	0 to 10 Hz	10 Hz

nO
LI1
LI2
LI3
LI4
LI5
LI6

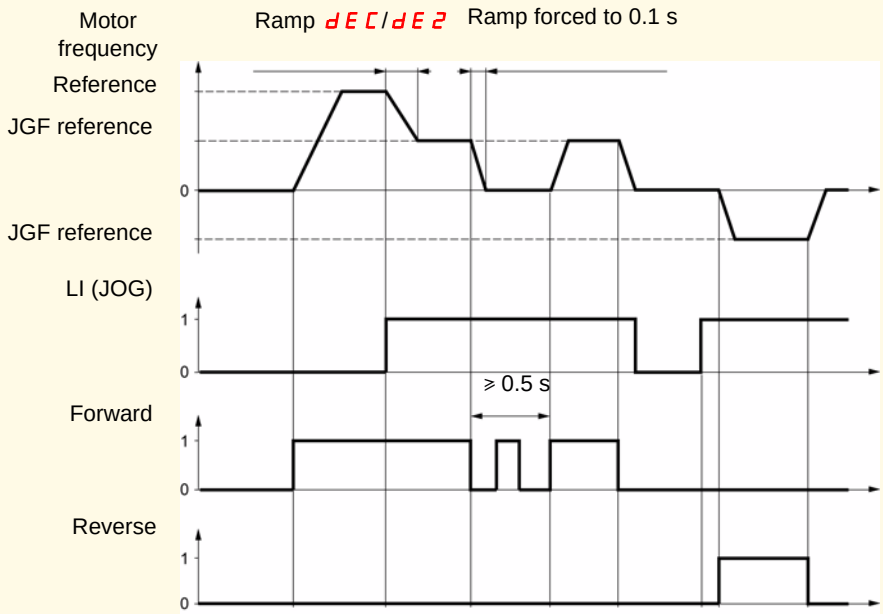

(1) Parameter can also be accessed in the [SETTINGS] (SEt-) menu.

★ These parameters only appear if the corresponding function has been selected in another menu. When the parameters can also be accessed and set from within the configuration menu for the corresponding function, their description is detailed in these menus, on the pages indicated, to aid programming.

[APPLICATION FUNCT.] (FUn-) menu

+/- speed

Function can only be accessed if [ACCESS LEVEL] (LAC) = [Level 2] (L2) or [Level 3] (L3), page 58.
Two types of operation are available.

1. **Use of single action buttons:** Two logic inputs are required in addition to the direction(s) of operation.
   The input assigned to the "+ speed" command increases the speed, the input assigned to the "- speed" command decreases the speed.
   Note:
   If the "+ speed" and "- speed" commands are activated at the same time, "- speed" will be given priority.

2. **Use of double action buttons:** Only one logic input assigned to "+ speed" is required.

+/- speed with double action buttons:

Description: 1 button pressed twice for each direction of rotation. Each action closes a contact.

	Released (- speed)	1st press (speed maintained)	2nd press (+ speed)
Forward button	–	a	a and b
Reverse button	–	c	c and d

Wiring example:

LI1: Forward
LIx: Reverse
LIy: + speed

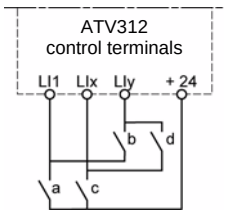

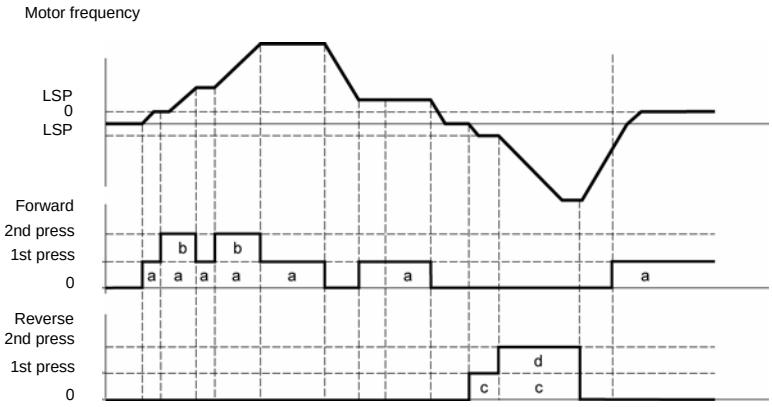

This type of +/- speed is incompatible with 3-wire control.

Whichever type of operation is selected, the max. speed is set by the [High speed] (HSP) parameter, page 33.

Note:
If the reference is switched via [Ref. 2 switching] (rFC), page 59, from one reference channel to any other reference channel with "+/- speed", the value of the [Output frequency] (rFr) reference (after ramp) is copied at the same time. This prevents the speed being incorrectly reset to zero when switching takes place.

[APPLICATION FUNCT.] (FUn-) menu

Code	Name/Description	Adjustment range	Factory setting
UPd-	**[+/- SPEED]** (motorized jog dial) Function can only be accessed if [ACCESS LEVEL] (LAC) = [Level 2] (L2) or [Level 3] (L3), and [+/-spd HMI] (UPdH) or [+/- SPEED] (UPdt) selected, page 58. **Note:** The "+/- speed" function is incompatible with several functions (see page 21). It can only be configured if these functions are unassigned, in particular the summing inputs (set [Summing ref. 2] (SA2) to [No] (nO), page 71) and the preset speeds (set [2 preset speeds] (PS2) and [4 preset speeds] (PS4) to [No] (nO), page 73) which will have been assigned as part of the factory settings.		
USP ★ nO LI1 LI2 LI3 LI4 LI5 LI6	**[+ speed assignment]** Parameter accessible for [+/- SPEED] (UPdt) only. Selecting the assigned logic input activates the function. ☐ [No] (nO): Not assigned ☐ [LI1] (LI1): Logic input LI1 ☐ [LI2] (LI2): Logic input LI2 ☐ [LI3] (LI3): Logic input LI3 ☐ [LI4] (LI4): Logic input LI4 ☐ [LI5] (LI5): Logic input LI5 ☐ [LI6] (LI6): Logic input LI6		[No] (nO)
dSP ★ nO LI1 LI2 LI3 LI4 LI5 LI6	**[-Speed assignment]** Parameter accessible for [+/- SPEED] (UPdt) only. Selecting the assigned logic input activates the function. ☐ [No] (nO): Not assigned ☐ [LI1] (LI1): Logic input LI1 ☐ [LI2] (LI2): Logic input LI2 ☐ [LI3] (LI3): Logic input LI3 ☐ [LI4] (LI4): Logic input LI4 ☐ [LI5] (LI5): Logic input LI5 ☐ [LI6] (LI6): Logic input LI6		[No] (nO)
Str ★ nO rAM EEP	**[Reference saved]** Associated with the "+/- speed" function, this parameter can be used to save the reference: • When the run commands disappear (saved to RAM) • When the line supply or the run commands disappear (saved to EEPROM) Therefore, the next time the drive starts up, the speed reference is the last reference saved. ☐ [No] (nO): No saving ☐ [RAM] (rAM): Saving in RAM ☐ [EEprom] (EEP): Saving in EEPROM		[No] (nO)

★ These parameters only appear if the corresponding function has been selected in another menu. When the parameters can also be accessed and set from within the configuration menu for the corresponding function, their description is detailed in these menus, on the pages indicated, to aid programming.

[APPLICATION FUNCT.] (FUn-) menu

PI regulator

Block diagram

The function is activated by assigning an analog input to the PI feedback (measurement).

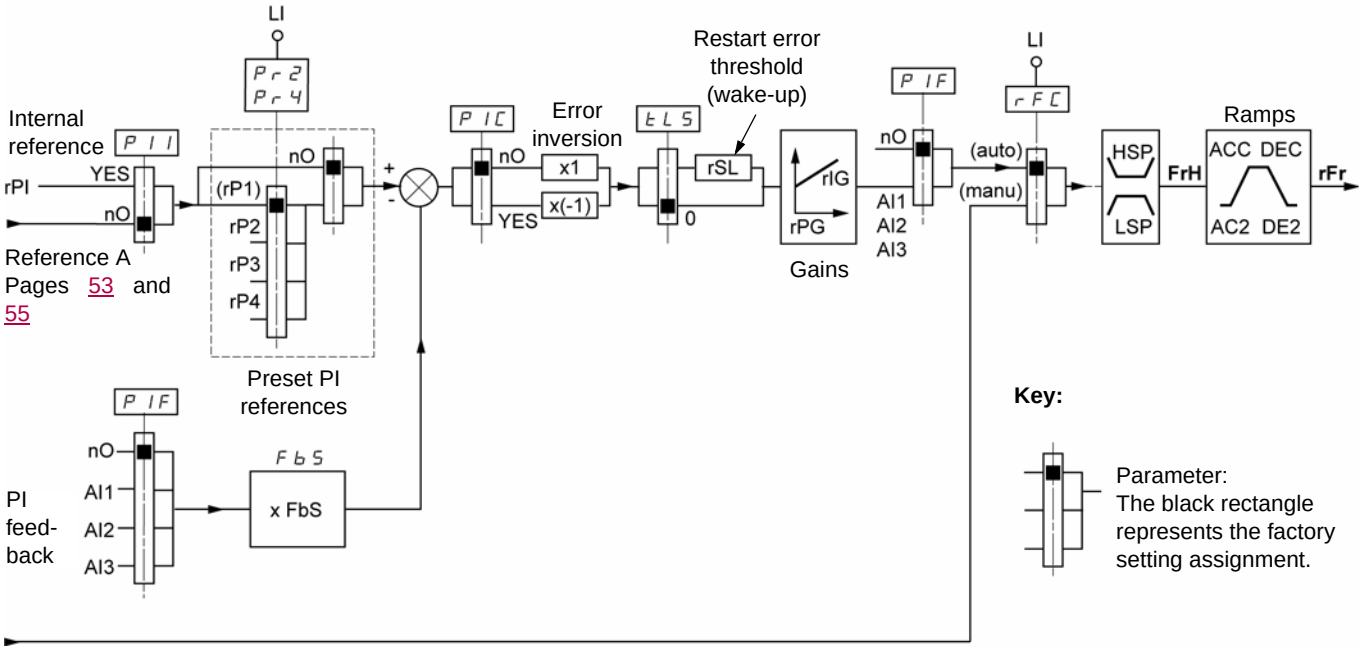

Reference B
Pages 53 and 55

PI feedback:

PI feedback must be assigned to one of these analog inputs, AI1, AI2, or AI3.

PI reference:

The PI reference can be assigned to the following parameters in order of priority:

- Preset references via logic inputs, [Preset ref. PID 2] (rP2), [Preset ref. PID 3] (rP3), and [Preset ref. PID 4] (rP4), page 82
- Internal reference [Internal PID ref.] (rPI), page 83
- Reference [Ref.1 channel] (Fr1), page 58

Combination table for preset PI references

LI (Pr4)	LI (Pr2)	Pr2 = nO	Reference
			rPI or Fr1
0	0		rPI or Fr1
0	1		rP2
1	0		rP3
1	1		rP4

Parameters can also be accessed in the [SETTINGS] (SEt-) menu:

- [Internal PID ref.] (rPI), page 32
- [Preset ref. PID 2] (rP2), [Preset ref. PID 3] (rP3), and [Preset ref. PID 4] (rP4), page 36
- [PID prop. gain] (rPG), page 36
- [PID integral gain] (rIG), page 36
- [PID fbk scale factor] (FbS), page 36:
  The [PID fbk scale factor] (FbS) parameter can be used to scale the reference according to the variation range for PI feedback (sensor rating).
  Example: Regulating pressure
  PI reference (process) 0-5 bar (0-100%)
  Rating of pressure sensor 0-10 bar
  [PID fbk scale factor] (FbS) = max. sensor scaling/max. process
  [PID fbk scale factor] (FbS) = 10/5= 2
- [PID wake up thresh.] (rSL), page 38:
  Can be used to set the PI error threshold above which the PI regulator will be reactivated (wake-up) after a stop due to the max. time threshold being exceeded at low speed [Low speed time out] (tLS)
- [PID correct. reverse] (PIC), page 36: If [PID correct. reverse] (PIC) = [No] (nO), the speed of the motor will increase when the error is positive (example: pressure control with a compressor). If [PID correct. reverse] (PIC) = [Yes] (YES), the speed of the motor will decrease when the error is positive (example: temperature control using a cooling fan).

[APPLICATION FUNCT.] (FUn-) menu

"Manual - Automatic" operation with PI

This function combines the PI regulator and [Ref. 2 switching] (rFC) reference switching, page 59. The speed reference is given by [Ref.2 channel] (Fr2) or by the PI function, depending on the state of the logic input.

Setting up the PI regulator

1. **Configuration in PI mode**
   See the block diagram on page 79.
2. **Perform a test in factory settings mode (in most cases, this will be sufficient)**.
   To optimize the drive, adjust [PID prop. gain.] (rPG) or [PID integral gain] (rIG) gradually and independently, and observe the effect on the PI feedback in relation to the reference.
3. **If the factory settings are unstable or the reference is incorrect:**

Perform a test with a speed reference in manual mode (without PI regulator) and with the drive on load for the speed range of the system:
- In steady state, the speed must be stable and comply with the reference, and the PI feedback signal must be stable.
- In transient state, the speed must follow the ramp and stabilize quickly, and the PI feedback must follow the speed.

If this is not the case, see the settings for the drive and/or sensor signal and cabling.

Switch to PI mode.
Set [Dec ramp adapt.] (brA) to no (no auto-adaptation of the ramp).
Set the [Acceleration] (ACC) and [Deceleration] (dEC) speed ramps to the minimum level permitted by the mechanics without triggering an [OVERBRAKING] (ObF) fault.
Set the integral gain [PID integral gain] (rIG) to the minimum level.
Observe the PI feedback and the reference.
Switch the drive ON/OFF repeatedly or quickly vary the load or reference a number of times.
Set the proportional gain [PID prop. gain] (rPG) in order to ascertain a good compromise between response time and stability in transient phases (slight overshoot and 1 to 2 oscillations before stabilizing).
If the reference varies from the preset value in steady state, gradually increase the integral gain [PID integral gain] (rIG), reduce the proportional gain [PID prop. gain] (rPG) in the event of instability (pump applications), and find a compromise between response time and static precision (see diagram).
Perform in-production tests over the whole reference range.

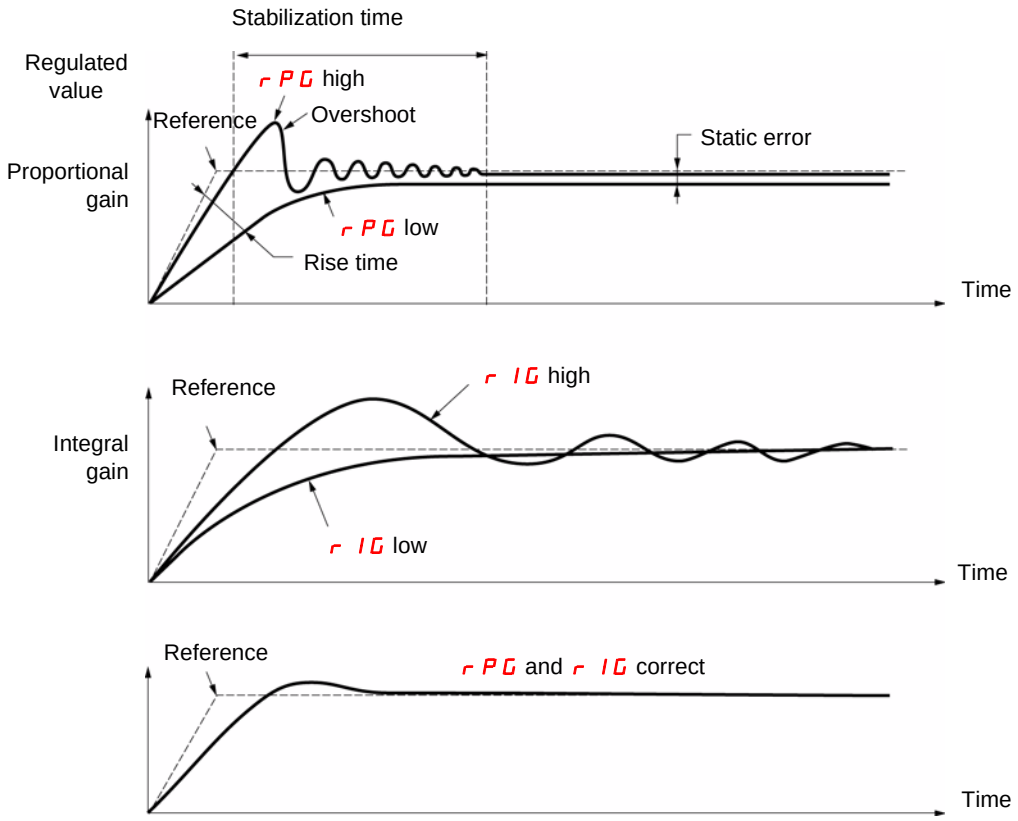

The oscillation frequency depends on the system dynamics.

Parameter	Rise time	Overshoot	Stabilization time	Static error
[PID prop. gain] (rPG) ↗	↘↘	↗	=	↘
[PID integral gain] (rIG) ↗	↘	↗↗	↗	↘↘

[APPLICATION FUNCT.] (FUn-) menu

Code	Name/Description	Adjustment range	Factory setting
PI-	**[PI REGULATOR]** **Note:** The "PI regulator" function is incompatible with several functions (see page 21). It can only be configured if these functions are unassigned, in particular the summing inputs (set [Summing ref. 2] (SA2) to [No] (nO), page 71) and the preset speeds (set [2 preset speeds] (PS2) and [4 preset speeds] (PS4) to [No] (nO), page 73) which will have been assigned as part of the factory settings.		
PIF nO AI1 AI2 AI3	**[PID feedback ass.]** ☐ [No] (nO): Not assigned ☐ [AI1] (AI1): Analog input AI1 ☐ [AI2] (AI2): Analog input AI2 ☐ [AI3] (AI3): Analog input AI3		[No] (nO)
rPG ★	**[PID prop. gain]** (1) Parameter is only visible if [PID feedback ass.] (PIF) is not set to [No] (nO), page 81. It provides dynamic performance when PI feedback is changing quickly.	0.01 to 100	1
rIG ★	**[PID integral gain]** (1) Parameter is only visible if [PID feedback ass.] (PIF) is not set to [No] (nO), page 81. It provides static precision when PI feedback is changing slowly.	0.01 to 100	1
FbS ★	**[PID fbk scale factor]** (1) Parameter is only visible if [PID feedback ass.] (PIF) is not set to [No] (nO), page 81. For adapting the process.	0.1 to 100	1
PIC ★ nO YES	**[PID correct. reverse]** Parameter is only visible if [PID feedback ass.] (PIF) is not set to [No] (nO), page 81. ☐ [No] (nO): Normal ☐ [Yes] (YES): Reverse		[No] (nO)
Pr2 ★ nO LI1 LI2 LI3 LI4 LI5 LI6 CD11 CD12 CD13 CD14 CD15	**[2 preset PID ref.]** Parameter is only visible if [PID feedback ass.] (PIF) is not set to [No] (nO), page 81. Selecting the assigned logic input activates the function. ☐ [No] (nO): Not assigned ☐ [LI1] (LI1): Logic input LI1 ☐ [LI2] (LI2): Logic input LI2 ☐ [LI3] (LI3): Logic input LI3 ☐ [LI4] (LI4): Logic input LI4 ☐ [LI5] (LI5): Logic input LI5 ☐ [LI6] (LI6): Logic input LI6 If [ACCESS LEVEL] (LAC) = [Level 3] (L3), the following assignments are possible: ☐ [CD11] (CD11): Bit 11 of the control word from a communication network ☐ [CD12] (CD12): Bit 12 of the control word from a communication network ☐ [CD13] (CD13): Bit 13 of the control word from a communication network ☐ [CD14] (CD14): Bit 14 of the control word from a communication network ☐ [CD15] (CD15): Bit 15 of the control word from a communication network		[No] (nO)

(1) Parameter(s) can also be accessed in the [SETTINGS] (SEt-) menu.

★ These parameters only appear if the corresponding function has been selected in another menu. When the parameters can also be accessed and set from within the configuration menu for the corresponding function, their description is detailed in these menus, on the pages indicated, to aid programming.

[APPLICATION FUNCT.] (FUn-) menu

Code	Name/Description	Adjustment range	Factory setting
PI-	**[PI REGULATOR]** (continued)		
Pr4 ★	**[4 preset PID ref.]** Parameter is only visible if [PID feedback ass.] (PIF) is not set to [No] (nO), page 81. Selecting the assigned logic input activates the function. Make sure that [2 preset PID ref.] (Pr2), page 81, has been assigned before assigning [4 preset PID ref.] (Pr4). nO ☐ [No] (nO): Not assigned LI1 ☐ [LI1] (LI1): Logic input LI1 LI2 ☐ [LI2] (LI2): Logic input LI2 LI3 ☐ [LI3] (LI3): Logic input LI3 LI4 ☐ [LI4] (LI4): Logic input LI4 LI5 ☐ [LI5] (LI5): Logic input LI5 LI6 ☐ [LI6] (LI6): Logic input LI6 If [ACCESS LEVEL] (LAC) = [Level 3] (L3), the following assignments are possible: Cd11 ☐ [CD11] (CD11): Bit 11 of the control word from a communication network Cd12 ☐ [CD12] (CD12): Bit 12 of the control word from a communication network Cd13 ☐ [CD13] (CD13): Bit 13 of the control word from a communication network Cd14 ☐ [CD14] (CD14): Bit 14 of the control word from a communication network Cd15 ☐ [CD15] (CD15): Bit 15 of the control word from a communication network		[No] (nO)
rP2 ★	**[Preset ref. PID 2]** (1) See page 36.	0 to 100%	30%
rP3 ★	**[Preset ref. PID 3]** (1) See page 36.	0 to 100%	60%
rP4 ★	**[Preset ref. PID 4]** (1) See page 36.	0 to 100%	90%

(1) Parameter(s) can also be accessed in the [SETTINGS] (SEt-) menu.

★ These parameters only appear if the corresponding function has been selected in another menu. When the parameters can also be accessed and set from within the configuration menu for the corresponding function, their description is detailed in these menus, on the pages indicated, to aid programming.

[APPLICATION FUNCT.] (FUn-) menu

Code	Name/Description	Adjustment range	Factory setting
PI-	**[PI REGULATOR]** (continued)		
rSL ★	❑ **[PID wake up thresh.]** (1) **⚠ DANGER** **UNINTENDED EQUIPMENT OPERATION** • Check that unintended restarts will not present any danger. **Failure to follow these instructions will result in death or serious injury.** If the "PI" and "Low speed operating time" [Low speed time out] (tLS) (page 38) are configured at the same time, the PI regulator may attempt to set a speed lower than[Low speed] (LSP). This results in unsatisfactory operation, which consists of starting, operating at [Low speed] (LSP), then stopping, and so on. The rSL (restart error threshold) parameter can be used to set a minimum PI error threshold for restarting after a stop at prolonged [Low speed] (LSP). The function is inactive if [Low speed time out] (tLS) = 0.	0 to 100%	0%
PII ★ nO YES	❑ **[Act. internal PID ref.]** ☐ [No] (nO): The reference for the PI regulator is [Ref.1 channel] (Fr1), except for [+/-spd HMI] (UPdH) and [+/- SPEED] (UPdt) (+/- speed cannot be used as a reference for the PI regulator). ☐ [Yes] (YES): The reference for the PI regulator is provided internally via the [Internal PID ref.] (rPI) parameter.		[No] (nO)
rPI ★	❑ **[Internal PID ref.]** (1) Parameter is only visible if [PID feedback ass.] (PIF) is not set to [No] (nO), page 81.	0 to 100%	0%

(1) Parameter(s) can also be accessed in the [SETTINGS] (SEt-) menu.

★ These parameters only appear if the corresponding function has been selected in another menu. When the parameters can also be accessed and set from within the configuration menu for the corresponding function, their description is detailed in these menus, on the pages indicated, to aid programming.

[APPLICATION FUNCT.] (FUn-) menu

Brake control

Function can only be accessed if [ACCESS LEVEL] (LAC) = [Level 2] (L2) or [Level 3] (L3) (page 53).
This function, which can be assigned to relay R2 or logic output AOC, enables the drive to manage an electromagnetic brake.

Principle

Synchronize brake release with the build-up of torque during startup and brake engage at zero speed on stopping, to help prevent jolting.

Brake sequence

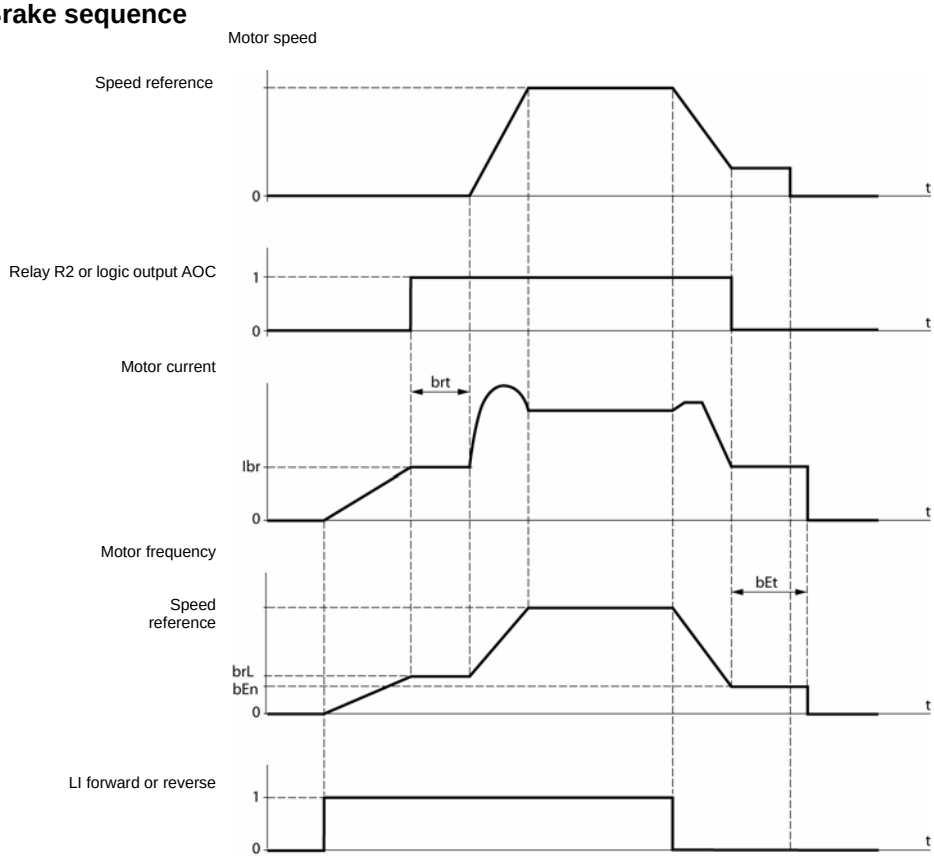

State of brake	Engaged	Released	Engaged

Settings which can be accessed in the application functions [APPLICATION FUNCT.] (FUn-) menu:

- Brake release frequency [Brake release freq] (brL)
- Brake release current [Brake release I FW] (Ibr)
- Brake release time delay [Brake Release time] (brt)
- Brake engage frequency [Brake engage freq] (bEn)
- Brake engage time delay [Brake engage time] (bEt)
- Brake release pulse [Brake impulse] (bIP)

Recommended brake control settings:

1. [Brake release freq] (brL), page 85:
   - Horizontal movement: Set to 0.
   - Vertical movement: Set to a frequency equal to the nominal motor slip in Hz.

2. [Brake release I FW] (Ibr), page 85:
   - Horizontal movement: Set to 0.
   - Vertical movement: Preset the nominal current of the motor then adjust it in order to help prevent jolting on start-up, making sure that the maximum load is held when the brake is released.

3. [Brake Release time] (brt), page 85:
   Adjust according to the type of brake. It is the time required for the mechanical brake to release.

4. [Brake engage freq] (bEn), page 85:
   - Horizontal movement: Set to 0.
   - Vertical movement: Set to a frequency equal to the nominal motor slip in Hz. **Note:** Max. [Brake engage freq] (bEn) **=** [Low speed] (LSP)**; this means an appropriate value must be set in advance for** [Low speed] (LSP).

5. [Brake engage time] (bEt), page 85:
   Adjust according to the type of brake. It is the time required for the mechanical brake to engage.

6. [Brake impulse] (bIP), page 85:
   - Horizontal movement: Set to [No] (nO).
   - Vertical movement: Set to [Yes] (YES) and check that the motor torque direction for "run forward" control corresponds to the upward direction of the load. If necessary, reverse two motor phases. This parameter generates motor torque in an upward direction regardless of the direction of operation commanded in order to maintain the load whilst the brake is releasing.

[APPLICATION FUNCT.] (FUn-) menu

Code	Name/Description	Adjustment range	Factory setting
bLC-	**[BRAKE LOGIC CONTROL]** Function can only be accessed if [ACCESS LEVEL] (LAC) = [Level 2] (L2) or [Level 3] (L3), page 58. **Note:** This function may be incompatible with other functions (see page 21).		
bLC nO r2 dO	**[Brake assignment]** ☐ [No] (nO): Not assigned ☐ [R2] (r2): Relay R2 ☐ [DO] (dO): Logic output AOC If [Brake assignment] (bLC) is assigned, the [Catch on the fly] (FLr) parameter, page 93, and the [Dec ramp adapt.] (brA) parameter, page 64, are forced to [No] (nO), and the [Output Phase Loss] (OPL) parameter, page 94, is forced to [Yes] (YES). [Brake assignment] (bLC) is forced to [No] (nO) if [Output Phase Loss] (OPL) = [Output cut] (OAC), page 94.		[No] (nO)
brL ★	**[Brake release freq]** Brake release frequency.	0.0 to 10.0 Hz	In accordance with the drive rating
Ibr ★	**[Brake release I FW]** Brake release current threshold for ascending or forward movement.	0 to 1.36 In (1)	In accordance with the drive rating
brt ★	**[Brake Release time]** Brake release time delay.	0 to 5 s	0.5 s
LSP ★	**[Low speed]** Motor frequency at min. reference. This parameter can also be changed in the [SETTINGS] (SEt-) menu, page 33.	0 to HSP (page 33)	0 LSP
bEn ★ nO 0 to LSP	**[Brake engage freq]** ☐ Not set ☐ Adjustment range in Hz If [Brake assignment] (bLC) is assigned and [Brake engage freq] (bEn) remains set to [No] (nO), the drive will lock in [BRAKE CONTROL FAULT] (bLF) mode on the first run command.	nO - 0 to LSP	nO
bEt ★	**[Brake engage time]** Brake engage time (brake response time).	0 to 5 s	0.5 s
bIP nO YES ★	**[Brake impulse]** ☐ [No] (nO): Whilst the brake is releasing, the motor torque direction corresponds to the direction of rotation commanded. ☐ [Yes] (YES): Whilst the brake is releasing, the motor torque direction is forward, regardless of the direction of operation commanded. **Note:** Check that the motor torque direction for "run forward" control corresponds to the upward direction of the load. If necessary, reverse two motor phases.		[No] (nO)

(1) In corresponds to the nominal drive current indicated in the Installation Manual and on the drive nameplate.

★ These parameters only appear if the corresponding function has been selected in another menu. When the parameters can also be accessed and set from within the configuration menu for the corresponding function, their description is detailed in these menus, on the pages indicated, to aid programming.

[APPLICATION FUNCT.] (FUn-) menu

Code	Name/Description	Adjustment range	Factory setting
LC2-	**[CURRENT LIMITATION 2]** Function can only be accessed if [ACCESS LEVEL] (LAC) = [Level 2] (L2) or [Level 3] (L3), page 58.		
LC2	**[Current limit 2]** Selecting the assigned logic input activates the function. nO [No] (nO): Not assigned LI1 [LI1] (LI1): Logic input LI1 LI2 [LI2] (LI2): Logic input LI2 LI3 [LI3] (LI3): Logic input LI3 LI4 [LI4] (LI4): Logic input LI4 LI5 [LI5] (LI5): Logic input LI5 LI6 [LI6] (LI6): Logic input LI6 If [ACCESS LEVEL] (LAC) = [Level 3] (L3), the following assignments are possible: Cd11 [CD11] (CD11): Bit 11 of the control word from a communication network Cd12 [CD12] (CD12): Bit 12 of the control word from a communication network Cd13 [CD13] (CD13): Bit 13 of the control word from a communication network Cd14 [CD14] (CD14): Bit 14 of the control word from a communication network Cd15 [CD15] (CD15): Bit 15 of the control word from a communication network [Current Limitation] (CLI) is enabled when the logic input or control word bit is at state 0 ([SETTINGS] (SEt-) menu, page 38). [I Limit. 2 value] (CL2) is enabled when the logic input or control word bit is at state 1.		[No] (nO)
CL2 ★	**[I Limit. 2 value]** (1) See page 38.	0.25 to 1.5 In (2)	1.5 In (2)

(1) Parameter can also be accessed in the [SETTINGS] (SEt-) menu.
(2) In corresponds to the nominal drive current indicated in the Installation Manual and on the drive nameplate.

★ These parameters only appear if the corresponding function has been selected in another menu. When the parameters can also be accessed and set from within the configuration menu for the corresponding function, their description is detailed in these menus, on the pages indicated, to aid programming.

[APPLICATION FUNCT.] (FUn-) menu

Code	Name/Description	Adjustment range	Factory setting
CHP-	**[SWITCHING MOTOR]** Function can only be accessed if [ACCESS LEVEL] (LAC) = [Level 2] (L2) or [Level 3] (L3), page 58.		
CHP	**[Motor switching]**		[No] (nO)
nO LI1 LI2 LI3 LI4 LI5 LI6	☐ [No] (nO): Not assigned ☐ [LI1] (LI1): Logic input LI1 ☐ [LI2] (LI2): Logic input LI2 ☐ [LI3] (LI3): Logic input LI3 ☐ [LI4] (LI4): Logic input LI4 ☐ [LI5] (LI5): Logic input LI5 ☐ [LI6] (LI6): Logic input LI6		
Cd11 Cd12 Cd13 Cd14 Cd15	If [ACCESS LEVEL] (LAC) = [Level 3] (L3), the following assignments are possible: ☐ [CD11] (CD11): Bit 11 of the control word from a communication network ☐ [CD12] (CD12): Bit 12 of the control word from a communication network ☐ [CD13] (CD13): Bit 13 of the control word from a communication network ☐ [CD14] (CD14): Bit 14 of the control word from a communication network ☐ [CD15] (CD15): Bit 15 of the control word from a communication network		
	LI or bit = 0: Motor 1 LI or bit = 1: Motor 2 **Note:** • If this function is used, the auto-tuning function, page 43, is not active on motor 2. • Changes to parameters are only taken into account when the drive is locked.		
	CAUTION **RISK OF DAMAGE TO MOTOR** The motor switching function disables motor thermal protection. The use of external overload protection is required when using motor switching. **Failure to follow these instructions can result in equipment damage.**		
UnS2 ★	**[Nom. mot. 2 volt.]** ATV312●●●M2: 100 to 240 V ATV312●●●M3: 100 to 240 V ATV312●●●N4: 100 to 500 V ATV312●●●S6: 100 to 600 V	In accordance with the drive rating	In accordance with the drive rating
FrS2 ★	**[Nom. motor 2 freq.]** **Note:** The ratio $\frac{\text{[Rated motor volt.] (UnS) (in volts)}}{\text{[Rated motor freq.] (FrS) (in Hz)}}$ must not exceed the following values: ATV312●●●M2: 7 max. ATV312●●●M3: 7 max. ATV312●●●N4: 14 max. ATV312●●●S6: 17 max. The factory setting is 50 Hz, or preset to 60 Hz if [Standard mot. freq] (bFr) is set to 60 Hz.	10 to 500 Hz	50 Hz

★ These parameters only appear if the corresponding function has been selected in another menu. When the parameters can also be accessed and set from within the configuration menu for the corresponding function, their description is detailed in these menus, on the pages indicated, to aid programming.

[APPLICATION FUNCT.] (FUn-) menu

Code	Name/Description	Adjustment range	Factory setting
CHP-	■ **[SWITCHING MOTOR]** (continued)		
nCr2 ★	❑ **[Nom. mot. 2 current]** Nominal motor 2 current given on the rating plate.	0.25 to 1.5 In (2)	In accordance with the drive rating
nSP2 ★	❑ **[Nom. mot. 2 speed]** 0 to 9,999 rpm then 10.00 to 32.76 krpm If, rather than the nominal speed, the nameplate indicates the synchronous speed and the slip in Hz or as a %, calculate the nominal speed as follows: • Nominal speed = synchronous speed x $\frac{100 - \text{slip as a \%}}{100}$ or • Nominal speed = synchronous speed x $\frac{50 - \text{slip in Hz}}{50}$ (50 Hz motors) or • Nominal speed = synchronous speed x $\frac{60 - \text{slip in Hz}}{60}$ (60 Hz motors)	0 to 32,760 rpm	In accordance with the drive rating
COS2 ★	❑ **[Motor 2 Cosinus Phi]** Cos Phi given on the rating plate of motor 2.	0.5 to 1	In accordance with the drive rating
UFt2 L P n nLd ★	❑ **[U/F mot.2 selected]** ☐ [Cst. torque] (L): Constant torque for motors connected in parallel or special motors ☐ [Var. torque] (P): Variable torque for pump and fan applications ☐ [SVC] (n): Sensorless flux vector control for constant torque applications ☐ [Energy sav.] (nLd): Energy saving, for variable torque applications not requiring high dynamics (behaves in a similar way to the P ratio at no load and the n ratio on load) Voltage 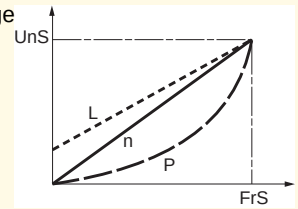 Frequency		[SVC] (n)
UFr2 ★	❑ **[IR compensation 2]** (1) See page 39.	0 to 100%	20%
FLG2 ★	❑ **[FreqLoopGain 2]** (1) See page 39.	1 to 100%	20%
StA2 ★	❑ **[Freq. loop stability 2]** (1) See page 39.	1 to 100%	20%
SLP2 ★	❑ **[Slip compensation 2]** (1) See page 39.	0 to 150%	100%

(1) Parameter can also be accessed in the [SETTINGS] (SEt-) menu.
(2) In corresponds to the nominal drive current indicated in the Installation Manual and on the drive nameplate.

★ These parameters only appear if the corresponding function has been selected in another menu. When the parameters can also be accessed and set from within the configuration menu for the corresponding function, their description is detailed in these menus, on the pages indicated, to aid programming.

[APPLICATION FUNCT.] (FUn-) menu

Management of limit switches

Function can only be accessed if [ACCESS LEVEL] (LAC) = [Level 2] (L2) or [Level 3] (L3), page 58.
This function can be used to manage the operation of one or two series limit switches (non-reversing or reversing).

- Assignment of one or two logic inputs (forward limit switch, reverse limit switch)
- Selection of the stop type (on ramp, fast or freewheel)
  Following a stop, the motor is permitted to restart in the opposite direction only.
- The stop is performed when the input is in state 0. The direction of operation is authorized in state 1.

Restarting after stop caused by a limit switch

- Send a run command in the other direction (when control is via the terminals, if [2/3 wire control] (tCC) = [2 wire] (2C) and [2 wire type] (tCt) = [Transition] (trn), first remove all the run commands).

or

- Invert the reference sign, remove all the run commands then send a run command in the same direction as before the stop caused by a limit switch.

Code	Name/Description	Adjustment range	Factory setting
LSt-	**[LIMIT SWITCHES]** Function can only be accessed if [ACCESS LEVEL] (LAC) = [Level 2] (L2) or [Level 3] (L3), page 58. **Note:** This function is incompatible with the "PI regulator" function (see page 21).		
LAF	**[Stop FW limit sw.]**		[No] (nO)
nO	[No] (nO): Not assigned		
LI1	[LI1] (LI1): Logic input LI1		
LI2	[LI2] (LI2): Logic input LI2		
LI3	[LI3] (LI3): Logic input LI3		
LI4	[LI4] (LI4): Logic input LI4		
LI5	[LI5] (LI5): Logic input LI5		
LI6	[LI6] (LI6): Logic input LI6		
LAr ★	**[Stop RV limit sw.]**		[No] (nO)
nO	[No] (nO): Not assigned		
LI1	[LI1] (LI1): Logic input LI1		
LI2	[LI2] (LI2): Logic input LI2		
LI3	[LI3] (LI3): Logic input LI3		
LI4	[LI4] (LI4): Logic input LI4		
LI5	[LI5] (LI5): Logic input LI5		
LI6	[LI6] (LI6): Logic input LI6		
LAS ★	**[Stop type]** Parameter can be accessed if [Stop FW limit sw.] (LAF), page 89, or [Stop RV limit sw.] (LAr), page 89, is assigned.		[Freewheel] (nSt)
rMP	[Ramp stop] (rMP): On ramp		
FSt	[Fast stop] (FSt): Fast stop		
nSt	[Freewheel] (nSt): Freewheel stop		

★ These parameters only appear if the corresponding function has been selected in another menu. When the parameters can also be accessed and set from within the configuration menu for the corresponding function, their description is detailed in these menus, on the pages indicated, to aid programming.

[APPLICATION FUNCT.] (FUn-) menu

rEF-
SEt-
drC-
I-O-
CtL-
FUn-
FLt-
COM-
SUP-

Code	Name/Description	Adjustment range	Factory setting
ArE nO 31E 31A	❑ **[Select ATV31 conf.]** This parameter is invisible if a communication option is present. It is only used to transfer a configuration via a loader tool or an ATV31 remote terminal. [Select ATV31 conf.] (ArE) can be used during a transfer between an ATV31 and ATV312 to specify the type of ATV31 (ATV31 or ATV31●●●●●●A). See page 105 **Configuration transfer between an ATV31 and an ATV312** for more details about compatible loader tools. Note : The transfer can't be done from an ATV31 to an ATV312 with a communication option board ☐ [No] (nO): Transfer between two ATV312 **Note1**: PowerSuite is only compatible with ATV312 using the standard input/output control board. **Note2**: Transfer between 2 drives is only possible if they have the same communication board. ☐ [ATV31 std] (31E): Transfer from an ATV31 to an ATV312. Set ARE = 31E to download a configuration from a European ATV31. ☐ [ATV31...A] (31A): Transfer from an ATV31●●●●●●A to an ATV312. Set ARE = 31A to download a configuration from an Asian ATV31. Procedure for transferring a configuration: • Set [Select ATV31 conf.] (ArE) to the required value. • Perform the configuration transfer. • Once the transfer is complete, turn the drive off. • Power the drive up again to initialize the configuration. • The parameter is restored to its factory setting.		[No] (nO)
SCS 2 s	❑ **[Saving config.]** See page 45.	(1)	[No] (nO)
CFG 2 s	❑ **[Macro configuration]** See page 45.	(1)	[Factory set.] (Std)
FCS 2 s	❑ **[Restore config.]** See page 46.	(1)	[No] (nO)

(1) [Saving config.] (SCS), [Macro configuration] (CFG), and [Restore config.] (FCS) can be accessed from several configuration menus, but they apply to all menus and parameters.

2 s The jog dial (ENT) needs to be pressed and held down (for 2 s) to change the assignment for this parameter.

[FAULT MANAGEMENT] (FLt-) menu

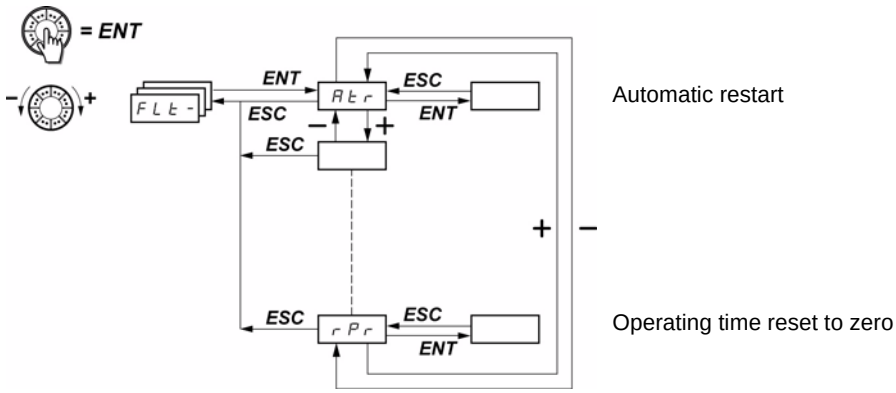

The parameters can only be modified when the drive is stopped and no run command is present.
On the optional remote display terminal, this menu can be accessed with the switch in the 🔓 position.

Code	Description	Adjustment range	Factory setting
Atr	❑ **[Automatic restart]**		[No] (nO)

⚠ DANGER

UNINTENDED EQUIPMENT OPERATION

- The automatic restart can only be used on machines or installations which do not pose any danger to either personnel or equipment.
- If the automatic restart is activated, R1 will only indicate a fault has been detected once the time-out period for the restart sequence has expired.
- The equipment must be used in compliance with national and regional safety regulations.

Failure to follow these instructions will result in death or serious injury.

The motor's automatic restart function will only be active in 2-wire level control ([2/3 wire control] (tCC) = [2 wire] (2C), and [2 wire type] (tCt) = [Level] (LEL) or [Fwd priority] (PFO)).

nO ☐ [No] (nO): Function inactive

YES ☐ [Yes] (YES): Automatic restart if the fault has been cleared and the other operating conditions permit the restart. The restart is performed by a series of automatic attempts separated by increasingly longer waiting periods: 1 s, 5 s, 10 s, then 1 min for subsequent ones.
If the restart has not taken place once the [Max. restart time] (tAr) configurable time has elapsed, the procedure is aborted and the drive remains locked until it is turned off and then on again.
This function is possible with the following conditions:
[NETWORK FAULT] (CnF): Communication detected fault on the communication card
[CANopen com.] (COF): CANopen communication detected fault
[External] (EPF): External fault
[4-20mA] (LFF): 4-20 mA loss
[Overbraking] (ObF): DC bus overvoltage
[Drive overheat] (OHF): Drive overheating
[Motor overload] (OLF): Motor overload
[Mot. phase] (OPF): Motor phase loss
[Mains overvoltage] (OSF): Line supply overvoltage
[Mains phase loss] (PHF): Line phase loss
[MODBUS FAULT] (SLF): Modbus communication

Relay R1 remains activated if this function is active. The speed reference and the operating direction must be maintained.

[FAULT MANAGEMENT] (FLt-) menu

Code	Description	Adjustment range	Factory setting
tAr ★ 5 10 30 1h 2h 3h Ct	❑ **[Max. restart time]** Parameter is only visible if [Automatic restart] (Atr) = [Yes] (YES). It can be used to limit the number of consecutive restarts in the event of a recurrent detected fault. ☐ [5 min] (5): 5 minutes ☐ [10 min] (10): 10 minutes ☐ [30 min] (30): 30 minutes ☐ [1 hour] (1h): 1 hour ☐ [2 hours] (2h): 2 hours ☐ [3 hours] (3h): 3 hours ☐ [Unlimited] (Ct): Unlimited (except for [MOTOR PHASE LOSS] (OPF) and [INPUT PHASE LOSS] (PHF); the max. duration of the restart process is limited to 3 hours)		[5 min] (5)
rSF nO LI1 LI2 LI3 LI4 LI5 LI6	❑ **[Fault reset]** ☐ [No] (nO): Not assigned ☐ [LI1] (LI1): Logic input LI1 ☐ [LI2] (LI2): Logic input LI2 ☐ [LI3] (LI3): Logic input LI3 ☐ [LI4] (LI4): Logic input LI4 ☐ [LI5] (LI5): Logic input LI5 ☐ [LI6] (LI6): Logic input LI6		[No] (nO)

★ These parameters only appear if the corresponding function has been selected in another menu. When the parameters can also be accessed and set from within the configuration menu for the corresponding function, their description is detailed in these menus, on the pages indicated, to aid programming.

[FAULT MANAGEMENT] (FLt-) menu

Code	Description	Adjustment range	Factory setting
FLr	❑ **[Catch on the fly]** Used to enable a smooth restart if the run command is maintained after the following events: - Loss of line supply or simple power off - Reset of current drive or automatic restart - Freewheel stop The speed given by the drive resumes from the estimated speed of the motor at the time of the restart, then follows the ramp to the reference speed. This function requires 2-wire control ([2/3 wire control] (tCC) = [2 wire] (2C)) with [2 wire type] (tCt) = [Level] (LEL) or [Fwd priority] (PFO). nO ☐ [No] (nO): Function inactive YES ☐ [Yes] (YES): Function active When the function is operational, it activates at each run command, resulting in a slight delay (1 second max.). [Catch on the fly] (FLr) is forced to [No] (nO) if brake control [Brake assignment] (bLC) is assigned, page 85.		[No] (nO)
EtF	❑ **[External fault ass.]** nO ☐ [No] (nO): Not assigned LI1 ☐ [LI1] (LI1): Logic input LI1 LI2 ☐ [LI2] (LI2): Logic input LI2 LI3 ☐ [LI3] (LI3): Logic input LI3 LI4 ☐ [LI4] (LI4): Logic input LI4 LI5 ☐ [LI5] (LI5): Logic input LI5 LI6 ☐ [LI6] (LI6): Logic input LI6 If [ACCESS LEVEL] (LAC) = [Level 3] (L3), the following assignments are possible: Cd11 ☐ [CD11] (CD11): Bit 11 of the control word from a communication network Cd12 ☐ [CD12] (CD12): Bit 12 of the control word from a communication network Cd13 ☐ [CD13] (CD13): Bit 13 of the control word from a communication network Cd14 ☐ [CD14] (CD14): Bit 14 of the control word from a communication network Cd15 ☐ [CD15] (CD15): Bit 15 of the control word from a communication network		[No] (nO)
LEt	❑ **[External fault config]** LO ☐ [Active low] (LO): The external fault is detected when the logic input assigned to [External fault ass.] (EtF) changes to state 0. **Note:** In this case, [External fault ass.] (EtF) cannot be assigned to a control word bit from a communication network. HIG ☐ [Active high] (HIG): The external fault is detected when the logic input or the bit assigned to [External fault ass.] (EtF) changes to state 1. **Note:** Where [External fault config] (LEt) = [Active high] (HIG), [External fault ass.] (EtF) is assigned to a control word bit from a communication network, and where there is no [External fault ass.] (EtF) fault detection, switching to [External fault config] (LEt) = [Active low] (LO) triggers [External fault ass.] (EtF) fault detection. In this case, it is necessary to turn the drive off and then back on again.		[Active high] (HIG)
EPL	❑ **[External fault mgt]** nO ☐ [Ignore] (nO): Ignore YES ☐ [Freewheel] (YES): Detected fault management with freewheel stop rMP ☐ [Ramp stop] (rMP): Detected fault management with stop on ramp FSt ☐ [Fast stop] (FSt): Detected fault management with fast stop		[Freewheel] (YES)

[FAULT MANAGEMENT] (FLt-) menu

Code	Description	Adjustment range	Factory setting
OPL	❑ **[Output Phase Loss]**		[Yes] (YES)

⚠ ⚠ DANGER

HAZARD OF ELECTRIC SHOCK, EXPLOSION, OR ARC FLASH

If **[Output Phase Loss] (OPL)** is set to **nO** loss of cable is not detected
- Check this action will not endanger personnel or equipment in any way

Failure to follow these instructions will result in death or serious injury.

- nO ☐ [No] (nO): Function inactive
- YES ☐ [Yes] (YES): Tripping on the [MOTOR PHASE LOSS] (OPF)
- OAC ☐ [Output cut] (OAC): No tripping on a [MOTOR PHASE LOSS] (OPF), but management of the output voltage in order to avoid an overcurrent when the link with the motor is re-established and catch on the fly performed even if [Catch on the fly] (FLr) = [No] (nO). To be used with output contactor.
  [Output Phase Loss] (OPL) is forced to [Yes] (YES) if [Brake assignment] (bLC) is not set to [No] (nO), page 85.

IPL	❑ **[Input phase loss]**		[Yes] (YES)

This parameter is only accessible on 3-phase drives.
- nO ☐ [No] (nO): Ignore
- YES ☐ [Yes] (YES): Detected fault management with fast stop

OHL	❑ **[Overtemp fault mgt]**		[Freewheel] (YES)

CAUTION

RISK OF DAMAGE TO THE MOTOR

Inhibiting drive overheating fault detection results in the drive not being protected. This invalidates the warranty.
- Check that the possible consequences do not present any risk.

Failure to follow these instructions can result in equipment damage.

- nO ☐ [Ignore] (nO): Ignore
- YES ☐ [Freewheel] (YES): Detected fault management with freewheel stop
- rMP ☐ [Ramp stop] (rMP): Detected fault management with stop on ramp
- FSt ☐ [Fast stop] (FSt): Detected fault management with fast stop

OLL	❑ **[Overload fault mgt]**		[Freewheel] (YES)

CAUTION

RISK OF DAMAGE TO THE MOTOR

If **[Overload fault mgt]** is set to **nO**, motor thermal protection is no longuer provided by the drive. Provide an alternative means of thermal protection.

Failure to follow these instructions can result in equipment damage.

- nO ☐ [Ignore] (nO): Ignore
- YES ☐ [Freewheel] (YES): Detected fault management with freewheel stop
- rMP ☐ [Ramp stop] (rMP): Detected fault management with stop on ramp
- FSt ☐ [Fast stop] (FSt): Detected fault management with fast stop

[FAULT MANAGEMENT] (FLt-) menu

Code	Description	Adjustment range	Factory setting
SLL	❑ **[Modbus fault mgt]**		[Fast stop] (FSt)
	⚠ WARNING **LOSS OF CONTROL** If **[Modbus fault mgt] (SLL)** = **[Ignore] (n0)**, communication control will be inhibited. For safety reasons, inhibiting the communication fault detection should be restricted to the debug phase or to special applications. **Failure to follow these instructions can result in death, serious injury, or equipment damage.**		
nO	☐ [Ignore] (nO): Ignore		
YES	☐ [Freewheel] (YES): Detected fault management with freewheel stop		
rMP	☐ [Ramp stop] (rMP): Detected fault management with stop on ramp		
FSt	☐ [Fast stop] (FSt): Detected fault management with fast stop This parameter does not apply to PowerSuite and SoMove software.		
COL	❑ **[CANopen fault mgt]**		[Fast stop] (FSt)
	⚠ WARNING **LOSS OF CONTROL** If **[CANopen fault mgt] (COL)** = **[Ignore] (n0)**, communication control will be inhibited. For safety reasons, inhibiting the communication fault detection should be restricted to the debug phase or to special applications. **Failure to follow these instructions can result in death, serious injury, or equipment damage.**		
nO	☐ [Ignore] (nO): Ignore		
YES	☐ [Freewheel] (YES): Detected fault management with freewheel stop		
rMP	☐ [Ramp stop] (rMP): Detected fault management with stop on ramp		
FSt	☐ [Fast stop] (FSt): Detected fault management with fast stop		
tnL	❑ **[Autotune fault mgt]**		[Yes] (YES)
	This parameter can be used to manage drive behavior in the event that auto-tuning is unsuccessful [AUTO TUNING FAULT] (tnF)		
nO	☐ [No] (nO): Ignored (the drive reverts to the factory settings)		
YES	☐ [Yes] (YES): Detected fault management with drive locked If [Cold stator resist.] (rSC), page 42, is not set to [No] (nO), [Autotune fault mgt] (tnL) is forced to [Yes] (YES).		
LFL	❑ **[4-20mA loss]**		[Freewheel] (YES)
nO	☐ [Ignore] (nO): Ignored (only possible value if [AI3 min. value] (CrL3) ≤ 3 mA, page 48)		
YES	☐ [Freewheel] (YES): Detected fault management with freewheel stop		
LFF	☐ [fallback spd] (LFF): The drive switches to the fallback speed ([fallback spd] (LFF) parameter).		
rLS	☐ [Spd maint.] (rLS): The drive maintains the speed at which it was operating when the loss was detected. This speed is saved and stored as a reference until the fault has disappeared.		
rMP	☐ [Ramp stop] (rMP): Detected fault management with stop on ramp		
FSt	☐ [Fast stop] (FSt): Detected fault management with fast stop **Note:** Before setting [4-20mA loss] (LFL) to [fallback spd] (LFF) check the connection of input AI3. If [4-20mA loss] (LFL) = [fallback spd] (LFF) or [Spd maint.] (rLS), no code is displayed.		
LFF	❑ **[Fallback speed]**	0 to 500 Hz	10 Hz
	Fallback speed setting in the event of a [4-20mA loss] (LFL).		

[FAULT MANAGEMENT] (FLt-) menu

Code	Description	Adjustment range	Factory setting
drn 2 s nO YES	❑ **[Derated operation]**		[No] (nO)
	Lowers the tripping threshold of [Undervoltage] (USF): in order to operate on line supplies with 50% voltage drops. ☐ [No] (nO): Function inactive ☐ [Yes] (YES): Function active In this case, drive performance is derated. **CAUTION** **RISK OF DAMAGE TO DRIVE** When **[Derated operation] (drn)** = **[Yes] (YES)**, use a line choke (see catalog). **Failure to follow these instructions can result in equipment damage.**		
StP nO MMS rMP FSt	❑ **[UnderV. prevention]**		[No] (nO)
	This function can be used to control the type of stop where there is a loss of line supply. ☐ [No] (nO): Locking of the drive and freewheel stopping of the motor ☐ [DC Maintain] (MMS): This stop mode uses the inertia to maintain the drive power supply as long as possible. ☐ [Ramp stop] (rMP): Stop according to the valid ramp ([Deceleration] (dEC) or [Deceleration 2] (dE2)) ☐ [Fast stop] (FSt): Fast stop, the stopping time depends on the inertia and the braking ability of the drive.		
InH 2 s nO LI1 LI2 LI3 LI4 LI5 LI6	❑ **[Fault inhibit assign.]**		[No] (nO)
	⚠ DANGER **LOSS OF PERSONNEL AND EQUIPMENT PROTECTION** • Enabling the fault inhibition parameter **[Fault inhibit assign.] (inH)** will disable the drive controller protection features. • InH should not be enabled for typical applications of this equipment. • InH should be enabled only in extraordinary situations where a thorough risk analysis demonstrates that the presence of adjustable speed drive protection poses a greater risk than personnel injury or equipment damage. **Failure to follow these instructions will result in death or serious injury.** This function disables drive protection for the following detected faults: SLF, CnF, EPF, CrF, LFF, OHF, OBF, OLF, OSF, OPF, PHF, SOF, tnF, COF, bLF ☐ [No] (nO): Not assigned ☐ [LI1] (LI1): Logic input LI1 ☐ [LI2] (LI2): Logic input LI2 ☐ [LI3] (LI3): Logic input LI3 ☐ [LI4] (LI4): Logic input LI4 ☐ [LI5] (LI5): Logic input LI5 ☐ [LI6] (LI6): Logic input LI6 The logic inputs are active in the high state.		

2 s The jog dial (ENT) needs to be pressed and held down (for 2 s) to change the assignment for this parameter.

[FAULT MANAGEMENT] (FLt-) menu

Code	Description	Adjustment range	Factory setting
rPr nO rtH	❑ **[Operating t. reset]** ☐ [No] (nO): No ☐ [rst. runtime] (rtH): Operating time reset to zero The [Operating t. reset] (rPr) parameter automatically returns to [No] (nO) after resetting to 0.		[No] (nO)
rP 2 s nO YES	❑ **[Product reset]** **⚠ DANGER** **UNINTENDED EQUIPMENT OPERATION** You are going to reset the drive. • Check this action will not endanger personnel or equipment in any way. **Failure to follow these instructions will result in death or serious injury.** ☐ [No] (nO): No ☐ [Yes] (YES): Yes		[No] (nO)

2 s The jog dial (ENT) needs to be pressed and held down (for 2 s) to change the assignment for this parameter.

[COMMUNICATION] (COM-) menu

efesotomasyon.com

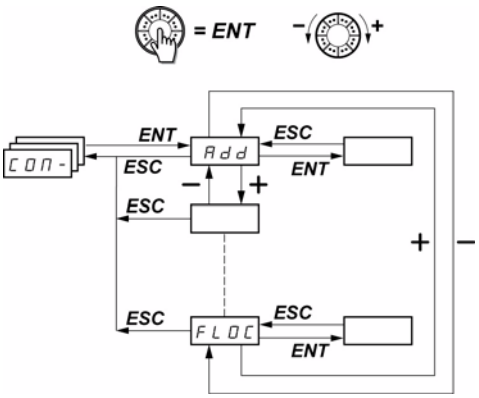

The parameters can only be modified when the drive is stopped and no run command is present. Modifications to the [Modbus Address] (Add), [Modbus baud rate] (tbr), [Modbus format] (tFO), [CANopen address] (AdCO), and [CANopen bit rate] (bdCO) parameters are not taken into account until the drive has been switched off and back on again.
On the optional ATV31 remote display terminal, this menu can be accessed with the switch in the position.

Code	Description	Adjustment range	Factory setting
Add	❑ **[Modbus Address]** Modbus address for the drive.	1 to 247	1
tbr	❑ **[Modbus baud rate]** Modbus transmission speed 4.8 ☐ [4.8 Kbps] (4.8): 4,800 bits/second 9.6 ☐ [9.6 Kbps] (9.6): 9,600 bits/second 19.2 ☐ [19.2 Kbps] (19.2): 19,200 bits/second (**Note:** This is the only value which supports the use of the remote display terminal.)		19,200 bps
tFO	❑ **[Modbus format]** 8O1 ☐ [8-O-1] (8O1): 8 data bits, odd parity, 1 stop bit 8E1 ☐ [8-E-1] (8E1): 8 data bits, even parity, 1 stop bit (**Note:** This is the only value which supports the use of the remote display terminal.) 8n1 ☐ [8-N-1] (8n2): 8 data bits, no parity, 1 stop bit 8n2 ☐ [8-N-2] (8n2): 8 data bits, no parity, 2 stop bits		[8-E-1] (8E1)
ttO	❑ **[Modbus time out]**	0.1 to 30 s	10 s
AdCO	❑ **[CANopen address]** CANopen address for the drive.	0 to 127	0
bdCO	❑ **[CANopen bit rate]** Modbus transmission speed 10.0 ☐ [10 kbps] (10.0): 10 kbps 20.0 ☐ [20 kbps] (20.0): 20 kbps 50.0 ☐ [50 kbps] (50.0): 50 kbps 125.0 ☐ [125 kbps] (125.0): 125 kbps 250.0 ☐ [250 kbps] (250.0): 250 kbps 500.0 ☐ [500 kbps] (500.0): 500 kbps 1000 ☐ [1 Mbps] (1000): 1000 kbps		125 bps
ErCO	❑ **[Error code]** 0 ☐ No error 1 ☐ Bus off 2 ☐ Life time 3 ☐ CAN overrun 4 ☐ Heartbeat		-

[COMMUNICATION] (COM-) menu

Code	Description	Adjustment range	Factory setting
FLO nO LI1 LI2 LI3 LI4 LI5 LI6	❑ **[Forced local assign.]** ☐ [No] (nO): Not assigned ☐ [LI1] (LI1): Logic input LI1 ☐ [LI2] (LI2): Logic input LI2 ☐ [LI3] (LI3): Logic input LI3 ☐ [LI4] (LI4): Logic input LI4 ☐ [LI5] (LI5): Logic input LI5 ☐ [LI6] (LI6): Logic input LI6 In forced local mode, the terminals and the display terminal regain control of the drive.		[No] (nO)
FLOC ★ AI1 AI2 AI3 AIU1 LCC	❑ **[Forced local Ref.]** Parameter can only be accessed if [ACCESS LEVEL] (LAC) = [Level 3] (L3), page 58. In forced local mode, only the speed reference is taken into account. PI functions, summing inputs, etc. are not active. See the diagrams on pages 55 to 57. ☐ [AI1] (AI1): Analog input AI1, logic inputs LI ☐ [AI2] (AI2): Analog input AI2, logic inputs LI ☐ [AI3] (AI3): Analog input AI3, logic inputs LI ☐ [AI Virtual 1] (AIV1): Jog dial, RUN/STOP buttons ☐ [HMI] (HMI): Remote display terminal: [HMI Frequency ref.] (LFr) reference, page 32, RUN/STOP/FWD/REV buttons		[AI1] (AI1)

★ These parameters only appear if the corresponding function has been selected in another menu. When the parameters can also be accessed and set from within the configuration menu for the corresponding function, their description is detailed in these menus, on the pages indicated, to aid programming.

[MONITORING] (SUP-) menu

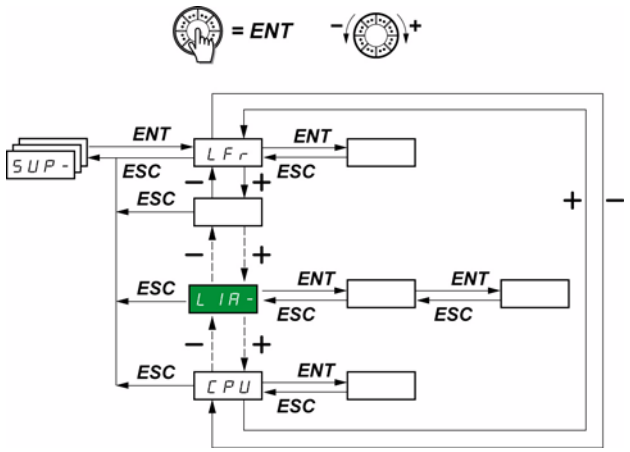

The parameters can be accessed with the drive running or stopped.
On the optional remote display terminal, this menu can be accessed with the switch in any position.

Some functions have numerous parameters. In order to clarify programming and avoid having to scroll through endless parameters, these functions have been grouped in submenus.
Like menus, submenus are identified by a dash after their code: LIA- for example.

When the drive is running, the value displayed is that of one of the monitoring parameters. By default, the value displayed is the output frequency applied to the motor ([Output frequency] (rFr) parameter).
While the value of the new monitoring parameter required is being displayed, press and hold down the jog dial (ENT) again (for 2 seconds) to confirm the change of monitoring parameter and store it. From then on, it is the value of this parameter that will be displayed during operation (even after powering down).
"Unless the new choice is confirmed by pressing and holding down ENT again, the display will revert to the previous parameter after powering down.

Note: After the drive has been turned off or following a loss of line supply, the parameter displayed is the drive status ([Ready] (rdY), for example).
The selected parameter is displayed following a run command.

[MONITORING] (SUP-) menu

Code	Description	Variation range
LFr ★	❑ **[HMI Frequency ref.]** Frequency reference for control via built-in display terminal or remote display terminal.	0 to 500 Hz
rPI ★	❑ **[Internal PID ref.]** Internal PID reference Parameter is only visible if [PID feedback ass.] (PIF) is not set to [No] (nO), page 81.	0 to 100%
FrH	❑ **[Frequency ref.]** Frequency reference before ramp (absolute value).	0 to 500 Hz
rFr	❑ **[Output frequency]** This parameter is also used for the +/- speed function using the jog dial on the keypad or display terminal. It displays and validates operation (see page 58). In the event of a loss of line supply, [Output frequency] (rFr) is not stored and the +/- speed function must be re-enabled in [MONITORING] (SUP-) and [Output frequency] (rFr).	- 500 Hz to + 500 Hz
SPd1 or SPd2 or SPd3	❑ **[Cust. output value]** [Cust. output value] (SPd1), [Cust. output value] (SPd2) or [Cust. output value] (SPd3) depending on the [Scale factor display] (SdS) parameter, page 40 ([Cust. output value] (SPd3) in the factory setting)	
LCr	❑ **[Motor current]** Estimation of current in the motor	
OPr	❑ **[Motor power]** 100% = nominal motor power, calculated using the parameters entered in the [MOTOR CONTROL] (drC-) menu	
ULn	❑ **[Mains voltage]** This parameter gives the line voltage via the DC bus, both in motor mode or when the motor is stopped.	
tHr	❑ **[Motor thermal state]** 100% = nominal thermal state 118% = "OLF" threshold (drive overload)	
tHd	❑ **[Drv. Therm att.]** 100% = nominal thermal state 118% = "OHF" threshold (drive overheating)	

★ These parameters only appear if the corresponding function has been selected in another menu. When the parameters can also be accessed and set from within the configuration menu for the corresponding function, their description is detailed in these menus, on the pages indicated, to aid programming.

[MONITORING] (SUP-) menu

Code	Description	Variation range
LFt	❑ **[Last fault occurred]** ☐ [Brake control] (bLF): Brake control detected fault ☐ [Incorrect config.] (CFF): Incorrect configuration (parameters) ☐ [Invalid config.] (CFI): Invalid configuration (parameters) ☐ [NETWORK FAULT] (CnF): Communication detected fault on the communication card ☐ [CANopen com.] (COF): Communication detected fault line 2 (CANopen) ☐ [Capa.charg] (CrF): Capacitor precharge detected fault ☐ [EEPROM] (EEF): EEPROM memory detected fault ☐ [External] (EPF): External fault ☐ [INTERNAL FAULT] (IF1): Unknown rating ☐ [INTERNAL FAULT] (IF2): HMI card not recognized or incompatible/display absent ☐ [INTERNAL FAULT] (IF3): EEPROM detected fault ☐ [INTERNAL FAULT] (IF4): Industrial EEPROM detected fault ☐ [4-20mA] (LFF): 4-20 mA loss ☐ [No fault] (nOF): No fault code saved ☐ [Overbraking] (ObF): DC bus overvoltage ☐ [Overcurrent] (OCF): Overcurrent ☐ [Drive overheat] (OHF): Drive overheating ☐ [Motor overload] (OLF): Motor overload ☐ [Mot. phase] (OPF): Motor phase loss ☐ [Mains overvoltage] (OSF): Line supply overvoltage ☐ [Mains phase loss] (PHF): Line phase loss ☐ [Mot. short circuit] (SCF): Motor short-circuit (phase, ground) ☐ [Modbus] (SLF): Modbus communication detected fault ☐ [Overspeed] (SOF): Motor overspeed ☐ [Auto-tuning] (tnF): Auto-tuning detected fault ☐ [Undervoltage] (USF): Line supply undervoltage	
Otr	❑ **[Motor torque]** 100% = nominal motor torque, calculated using the parameters entered in the [MOTOR CONTROL] (drC-) menu.	
rtH	❑ **[Run time]** Total time the motor has been powered up: 0 to 9,999 (hours), then 10.00 to 65.53 (kilo-hours). Can be reset to zero by the [Operating t. reset] (rPr) parameter in the [FAULT MANAGEMENT] (FLt-) menu, page 97.	0 to 65,530 hours

[MONITORING] (SUP-) menu

Code	Description	Variation range
COd	❑ **[PIN code 1]** Enables the drive configuration to be protected using an access code. When access is locked by means of a code, only the parameters in the [MONITORING] (SUP-) and [SPEED REFERENCE] (rEF-) menus can be accessed. The MODE button can be used to switch between menus. **Note: Before entering a code, do not forget to make a careful note of it.** OFF ☐ [OFF] (OFF): No access locking codes • To lock access, enter a code (2 to 9,999). The display can be incremented using the jog dial. Then press ENT. [ON] (On) appears on the screen to indicate that access has been locked. On ☐ [ON] (On): A code is locking access (2 to 9,999). • **To unlock access**, enter the code (incrementing the display using the jog dial) and press ENT. The code remains on the display and access is unlocked until the next time the drive is turned off. Access will be locked again the next time the drive is turned on. • **If an incorrect code is entered**, the display changes to [ON] (On), and access remains locked. 8888 ☐ Access is unlocked (the code remains on the screen). • **To reactivate locking with the same code** when access has been unlocked, return to [ON] (On) using the jog dial and then press ENT. [ON] (On) remains on the screen to indicate that access has been locked. • **To lock access with a new code** when access has been unlocked, enter the new code (increment the display using the jog dial) and then press ENT. On appears on the screen to indicate that access has been locked. • **To clear locking** when access has been unlocked, return to [OFF] (OFF) using the jog dial and then press ENT. [OFF] (OFF) remains on the display. Access is unlocked and will remain so until the next restart.	
tUS	❑ **[Auto tuning state]** tAb ☐ [Not done] (tAb): The default stator resistance value is used to control the motor. PEnd ☐ [Pending] (PEnd): Auto-tuning has been requested but not yet performed. PrOG ☐ [In Progress] (PrOG): Auto-tuning in progress. FAIL ☐ [Failed] (FAIL): Auto-tuning was unsuccessful. dOnE ☐ [Done] (dOnE): The stator resistance measured by the auto-tuning function is used to control the motor. Strd ☐ [Entered R1] (Strd): The cold state stator resistance ([Cold stator resist.] (rSC) which is not set to [No] (nO)) is used to control the motor.	
UdP	❑ **[Drv.Soft.Ver]** This parameter gives the software version for the drive. Example: 1102 = V1.1 IE02	
OICt	❑ **[OPT1 card type]** This parameter is only visible if an option card is present. It is used to visualize the name of the option currently present. nO No card, CANopen card or DaisyChain card (these cards are unable to send their names to the ATV312) dnt DeviceNet card PbS Profibus card	
CnF	❑ **[Network fault]** Option card fault code This parameter is read-only and is only visible if an option card is present. The fault code remains saved in the parameter, even if the cause disappears. The parameter is reset after the drive is disconnected and then reconnected. The values of this parameter depend on the network card. Consult the manual for the corresponding card.	

[MONITORING] (SUP-) menu

Code	Name/Description	Adjustment range	Factory setting
LIA-	**[LOGIC INPUT CONF.]**		
LI1A LI2A LI3A LI4A LI5A LI6A	Can be used to display the functions assigned to each input. If no functions have been assigned, [No] (nO) is displayed. The jog dial can be used to scroll through all the functions. If a number of functions have been assigned to the same input, check that they are compatible.		
LIS	Can be used to display the state of logic inputs (display segment assignment: high = 1, low = 0) State 1 State 0 LI1 LI2 LI3 LI4 LI5 LI6 Example above: LI1 and LI6 are at 1; LI2 to LI5 are at 0.		
AIA-	**[ANALOG INPUTS IMAGE]**		
AI1A AI2A AI3A	Can be used to display the functions assigned to each input. If no functions have been assigned, [No] (nO) is displayed. The jog dial can be used to scroll through all the functions. If a number of functions have been assigned to the same input, check that they are compatible.		

Migration ATV31 - ATV312

efesotomasyon.com

The ATV312 is compatible with the ATV31.
To retrieve the configuration of the ATV31, simply transfer the configuration from the ATV31 to the ATV312. See below **Configuration transfer between an ATV31 and an ATV312**

Dimensions

For all sizes, the ATV312 is 6 mm less deep than the ATV31●●●●●●A.

Replacing an ATV31●●●●●●A with an ATV312

Note: Position of the logic input switch
On the ATV31●●●●●●A, the logic input switch was set to "**Sink**" in the factory setting.
On the ATV312, it is set to "**Source**" in the factory setting.
Set the switch to match the setting on the product being replaced. For more information, see the "Control terminals" chapter in the Installation Manual.

Note: Position of the IT jumper
There was no integrated EMC filter on the ATV31●●●●●●A. For details on how to deactivate the integrated EMC filter on the ATV312, see the "Operation with IT connection" chapter in the Installation Manual.

ATV312 used in LOCAL configuration (see page 27) uses the Jog Dial as a potentiometer and RUN button is activated. This is a similar way of working than ATV31●●●●●●A. When the drive is powered up for the first time, the two parameters shown below appear after [Standard mot. freq] (bFr). They need to be set as follows:
[Ref.1 channel] (Fr1), page 29, to [AI Virtual 1] (AIV1)
[2/3 wire control] (tCC), page 30, to [Local] (LOC)

The following parameters can be used subsequently to return to the other HMI version:
[Ref.1 channel] (Fr1) in the [COMMAND] (CtL-) menu
[2/3 wire control] (tCC) in the [INPUTS / OUTPUTS CFG] (I-O-) menu

Factory settings
As well as the differences in terms of control by potentiometer, the following differences apply between the factory settings for the ATV31●●●●●●A and those of the ATV312:

Parameter	ATV31●●●●●●A	ATV312
[2/3 wire control] (tCC)	Local control LOC	[2 wire] (2C)
[Ref.1 channel] (Fr1)	Analog input AIP	AI1
[Cmd channel 1] (Cd1)	Local control LOC	tEr
[Reverse assign.] (rrS)	[No] (nO) (if [2/3 wire control] (tCC) = [Local] (LOC))	LI2
[Forced local Ref.] (FLOC)	AIP jog dial	AIU1
[Select ATV31 conf.] (ArE)	Parameter does not exist on the ATV31	[No] (nO)

Configuration transfer between an ATV31 and an ATV312 (using the ATV31 remote terminal or a loader tool)

Compatible loader tools are :
- Multi-Loader V1.10 and higher,
- Simple-Loader V1.3 and higher,
- SoMove V1.1.11.1 and higher,
- SoMove Mobile V2.0 and higher,
- PowerSuite 2.6 Patch1 and higher.

Note: The transfer can't be done from an ATV31 to an ATV312 with a communication option board.

A new [Select ATV31 conf.] (ArE) parameter has been added to the [APPLICATION FUNCT.] (FUn-) menu.
It can be used to specify the ATV31 type (ATV31 or ATV31●●●●●●A) during transfers between an ATV31 and ATV312.

Values of the [Select ATV31 conf.] (ArE) parameter:
- [No] (nO), factory setting, transfer between two ATV312
- [ATV31...A] (31A), transfer from ATV31●●●●●●A to ATV312
- [ATV31 std] (31E), transfer from ATV31 to ATV312

To perform a configuration transfer, see the procedure on page 90.

Diagnostics and troubleshooting

Drive does not start, no code displayed

- If the display does not light up, check the power supply to the drive and check the wiring of inputs AI1 and AI2 and the connection to the RJ45 connector.
- The assignment of the "Fast stop" or "Freewheel stop" functions will prevent the drive from starting if the corresponding logic inputs are not powered up. The ATV312 then displays [Freewheel stop] (nSt) or [Fast stop] (FSt). This is normal since these functions are active at zero so that the drive will be stopped if there is a wire break.
- Check that the run command input(s) have been actuated in accordance with the chosen control mode (the [2/3 wire control] (tCC) parameter in the [INPUTS / OUTPUTS CFG] (I-O-) menu, page 47).
- If an input is assigned to the limit switch function and this input is at zero, the drive can only be started up by sending a command for the opposite direction (see page 89).
- If the reference channel (page 53) or the control channel (page 54) is assigned to a communication network, when the power supply is connected, the drive will display [Freewheel stop] (nSt) and remain in stop mode until the communication bus sends a command.
- If the LED on the DC bus is lit and nothing appears on the display, check that there is no short-circuit on the 10 V power supply.
- If the drive displays [Ready] (rdy) and refuses to start, check that there is no short-circuit on the 10 V power supply and check the wiring of inputs AI1 and AI2 and the connection to the RJ45 connector.
- In the factory setting, the "RUN" button is inactive. Set the [Ref.1 channel] (Fr1) parameter, page 29 , and the [Cmd channel 1] (Cd1) parameter, page 59, to control the drive locally.

Fault detection codes which require a power reset after the fault is cleared

The cause of the fault must be removed before resetting by cycling power to the drive.
[PRECHARGE FAULT] (CrF), [OVERSPEED] (SOF), [AUTO-TUNING FAULT] (tnF), and [BRAKE CONTROL FAULT] (bLF) can also be reset remotely using a logic input (the [Fault reset] (rSF) parameter in the [FAULT MANAGEMENT] (FLt-) menu, page 92).

Code	Name	Probable cause	Remedy
bLF	[BRAKE CONTROL FAULT]	• Brake release current not reached • Brake engage frequency threshold [Brake engage freq] (bEn) = [No] (nO) (not set) whereas the brake control [Brake assignment] (bLC) is assigned	• Check the drive/motor connection. • Check the motor windings. • Check the [Brake release I FW] (Ibr) setting in the [APPLICATION FUNCT.] (FUn-) menu, page 85. • Apply the recommended settings for [Brake engage freq] (bEn), pages 84 and 85.
CrF	[PRECHARGE FAULT]	• Precharge relay control or damaged precharge resistor	• Replace the drive.
EEF	[EEPROM FAULT]	• Internal memory	• Check the environment (electromagnetic compatibility) • Replace the drive.
IF1	[INTERNAL FAULT]	• Unknown rating	• Replace the drive. • Restart the drive. • Contact a Schneider Electric representative.
IF2	[INTERNAL FAULT]	• HMI card not recognized • HMI card incompatible • No display present	
IF3	[INTERNAL FAULT]	• EEPROM	
IF4	[INTERNAL FAULT]	• Industrial EEPROM	

Diagnostics and troubleshooting (continued)

Fault detection codes which require a power reset after the fault is cleared (continued)

Code	Name	Probable cause	Remedy
OCF	[OVERCURRENT]	• Parameters in the [SETTINGS] (SEt-) and [MOTOR CONTROL] (drC-) menus are incorrect. • Inertia or load too high • Mechanical locking	• Check the parameters in [SETTINGS] (SEt-) , page 32, and [MOTOR CONTROL] (drC-) page 41. • Check the size of the motor/drive/load. • Check the state of the mechanism.
SCF	[MOTOR SHORT CIRCUIT]	• Short-circuit or grounding at the drive output • Significant ground leakage current at the drive output if several motors are connected in parallel	• Check the cables connecting the drive to the motor, and the motor insulation. • Reduce the switching frequency • Connect chokes in series with the motor
SOF	[OVERSPEED]	• Instability or • Driving load too high	• Check the motor, gain and stability parameters • Add a braking resistor • Check the size of the motor/drive/load.
tnF	[AUTO TUNING FAULT]	• Special motor or motor whose power is not suitable for the drive • Motor not connected to the drive	• Use the L ratio or the [Var. torque] (P) ratio (see [U/F mot 1 selected] (UFt), page 44). • Check that the motor is present during auto-tuning. • If an output contactor is being used, close it during auto-tuning.

Fault detection codes that can be reset with the automatic restart function after the cause has disappeared

See the [Automatic restart] (Atr) function, page 91.
These detected faults can also be reset by turning the drive off then on again or by means of a logic input (the [Fault reset] (rSF) parameter, page 92, in the [FAULT MANAGEMENT] (FLt-) menu, page 91).

Code	Name	Probable cause	Remedy
CnF	[NETWORK FAULT]	• Communication detected fault on the communication card	• Check the environment (electromagnetic compatibility) • Check the wiring. • Check the time out. • Replace the option card. • See the [CANopen fault mgt] (COL) parameter page 95 to define the stop mode with a (CnF).
COF	[CANopen FAULT]	• Interruption in communication on the CANopen bus	• Check the communication bus • Refer to the relevant product documentation.
EPF	[EXTERNAL FAULT]	• Depending on user	• Depending on user
LFF	[4-20mA LOSS]	• Loss of the 4-20 mA reference on input AI3	• Check the connection on input AI3.
ObF	[OVERBRAKING]	• Braking too sudden or driving load	• Increase the deceleration time • Install a braking resistor if necessary. • Activate the [Dec ramp adapt.] (bra) function, page 64, if it is compatible with the application.
OHF	[DRIVE OVERHEAT]	• Drive temperature too high	• Check the motor load, the drive ventilation and the environment. Wait for the drive to cool before restarting.

Diagnostics and troubleshooting (continued)

Fault detection codes that can be reset with the automatic restart function after the cause has disappeared (continued)

Code	Name	Probable cause	Remedy
OLF	[MOTOR OVERLOAD]	• Triggered by excessive motor current • [Cold stator resist.] (rSC) parameter value incorrect	• Check the [Mot. therm. current] (ItH) setting, page 33, of the motor thermal protection, check the motor load. Wait for the drive to cool before restarting. • Remeasure [Cold stator resist.] (rSC), page 42.
OPF	[MOTOR PHASE LOSS]	• Loss of one phase at drive output • Output contactor open • Motor not connected or motor power too low • Instantaneous instability in the motor current	• Check the connections from the drive to the motor. • If an output contactor is being used, set [Output Phase Loss] (OPL) to [Output cut] (OAC) ([FAULT MANAGEMENT] (FLt-) menu, page 94). • Test on a low-power motor or without a motor: In factory settings mode, motor output phase loss detection is active ([Output Phase Loss] (OPL) = [Yes] (YES)). To check the drive in a test or maintenance environment without having to switch to a motor with the same rating as the drive (particularly useful in the case of high-power drives), deactivate motor phase loss detection ([Output Phase Loss] (OPL) = [No] (nO)). • Check and optimize the [IR compensation] (UFr), [Rated motor volt.] (UnS), and [Rated mot. current] (nCr) parameters, and perform an [Auto tuning] (tUn) operation, page 43.
OSF	[MAINS OVERVOLTAGE]	• Line voltage is too high. • Disturbed line supply	• Check the line voltage.
PHF	[INPUT PHASE LOSS]	• Drive incorrectly supplied or a fuse blown • Failure of one phase • Three-phase ATV312 used on a single-phase line supply • Unbalanced load This protection only operates with the drive on load	• Check the power connection and the fuses. • Reset • Use a three-phase line supply. • Disable the detection by setting [Input phase loss] (IPL) = [No] (nO) ([FAULT MANAGEMENT] (FLt-) menu, page 94).
SLF	[MODBUS FAULT]	• Interruption in communication on the Modbus bus • Remote display terminal enabled ([HMI command] (LCC) = [Yes] (YES), page 61) and terminal disconnected.	• Check the communication bus • Refer to the relevant product documentation. • Check the link with the remote display terminal.

Diagnostics and troubleshooting (continued)

Fault detection codes that are reset as soon as their cause disappears

Code	Name	Probable cause	Remedy
CFF	[INCORRECT CONFIG.]	• The current configuration is inconsistent. • Addition or removal of an option	• Return to factory settings or retrieve the backup configuration, if it is valid. See the [Restore config.] (FCS) parameter, page 46.
CFI	[INVALID CONFIG]	• Invalid configuration The configuration loaded in the drive via the serial link is inconsistent	• Check the configuration loaded previously. • Load a consistent configuration.
USF	[UNDERVOLTAGE]	• Insufficient line supply • Transient voltage dip • Damaged precharge resistor	• Check the voltage and the voltage parameter. Tripping threshold in [UNDERVOLTAGE] (USF) ATV312●●●●M2: 160 V ATV312●●●●M3: 160 V ATV312●●●●N4: 300 V ATV312●●●●S6: 430 V • Replace the drive.

Diagnostics and troubleshooting (continued)

Fault detection codes displayed on the ATV12 remote display terminal

Code	Name	Description
In It:	Initialization in progress	• The microcontroller is initializing. • Search underway for communication configuration
CON. E (1)	Communication error	• Time out detected fault (50 ms) • This message is displayed after 20 attempts at communication.
A - 17 (1)	Alarm button	• A button has been held down for more than 10 seconds. • The keypad is disconnected. • The "keypad" wakes up when a button is pressed.
cLr (1)	Confirmation of detected fault reset	• This is displayed when the STOP button is pressed once during a remote terminal detected fault.
dEU. E (1)	Drive disparity	• The drive brand does not match that of the remote terminal.
rOM. E (1)	ROM anomaly	• The remote terminal detects a ROM anomaly on the basis of checksum calculation.
rAM. E (1)	RAM anomaly	• The remote terminal detects a RAM anomaly.
CPU. E (1)	Other detected faults	• Other detected faults

(1) Flashing

Index of functions

efesotomasyon.com

[+/- SPEED]	77
[2/3 wire control]	47
[ACCESS LEVEL]	58
[Analog./logic output]	48
[Auto DC injection]	69
[Automatic restart]	91
[Auto tuning]	43
Brake control	84
[CANopen address]	98
[Catch on the fly]	93
[Cmd switching]	60
Control and reference channels	50
[Current limit 2]	86
[Current Limitation]	38
[DC injection assign.]	67
[Dec ramp adapt.]	64
Drive thermal protection	12
Drive ventilation	12
[Fast stop]	66
[Fault reset]	92
[Forced local assign.]	99
[Freewheel stop ass.]	68
[JOG]	76
Management of limit switches	89
[Modbus Address]	98
[Mot. therm. current]	33
Motor thermal protection	13
PI regulator	79
Preset speeds	72
[R1 Assignment]	49
[R2 Assignment]	49
[RAMPS]	62
[Ramp switch ass.]	64
[Ref. 2 switching]	59
Return to factory settings/Restore configuration	46
Saving the configuration	45
[Skip Frequency]	36
[STOP MODES](continued)	66
[SUMMING INPUTS]	71
[Switching freq.]	40
[SWITCHING MOTOR]	87
[U/F mot 1 selected]	44

Index of parameter codes and customer settings

Code	Page	Name	Unit	Value/Possible function		Factory setting	Customer setting
AC2	32 64	[Acceleration 2]	s	In accordance with Inr	-	5	
ACC	32 63	[Acceleration]	s	In accordance with Inr	-	3	
AdC	69	[Auto DC injection]	-	nO YES Ct	[No]: No injection [Yes]: Standstill injection for adjustable period [Continuous]: Continuous standstill injection	YES	
AdCO	98	[CANopen address]	-	0 to 127	-	0	
Add	98	[Modbus Address]	-	1 to 247	-	1	
AI1A	104	[AI1 assignment]	-	-	-	-	
AI2A	104	[AI2 assignment]	-	-	-	-	
AI3A	104	[AI3 assignment]	-	-	-	-	
AIU1	31	[Image input AIV1]	%	0 to 100	-	-	
AO1t	48	[AO1 Type]	-	0A 4A 10U	[Current]: Configuration 0 - 20 mA [Cur. 4-20]: Configuration 4 - 20 mA [Voltage]: Configuration 0 - 10 V	0	
ArE	90	[Select ATV31 conf.]		nO 31A 31E	[No]: Transfer between two ATV312 [ATV31...A]: Transfer from an ATV31●●●●●●A to an ATV312 [ATV31 std] : Transfer from an ATV31 to an ATV312	nO	
Atr	91	[Automatic restart]	-	nO YES	[No]: Function inactive [Yes]: Automatic restart	nO	
bdCO	98	[CANopen bit rate]	kbps	10.0 20.0 50.0 125.0 250.0 500.0 1000	[10 kbps]: 10 kbps [20 kbps]: 20 kbps [50 kbps]: 50 kbps [125 kbps]: 125 kbps [250 kbps]: 250 kbps [500 kbps]: 500 kbps [1 Mbps]: 1000 kbps	125.0	
bEn	85	[Brake engage freq]	-	nO 0 to LSP	Not set Adjustment range in Hz	nO	
bEt	85	[Brake engage time]	s	0 to 5	-	0.5	
bFr	29 41	[Standard mot. freq]	Hz	50 60	[50Hz IEC] [60Hz NEMA]	50	
bIP	85	[Brake impulse]	-	nO YES	[No]: Motor torque during brake release in the direction of rotation requested [Yes]: Motor torque during brake release in forward rotation	nO	
bLC	85	[Brake assignment]	-	nO r2 dO	[No]: Not assigned [R2]: Relay R2 [DO]: Logic output AOC	nO	
brA	64	[Dec ramp adapt.]	-	nO YES	[No]: Function inactive [Yes]: Function active	YES	
brL	85	[Brake release freq]	Hz	0.0 to 10.0	-	In accordance with the drive rating	
brt	85	[Brake Release time]	s	0 to 5	-	0.5	

Index of parameter codes and customer settings

Code	Page	Name	Unit	Value/Possible function		Factory setting	Customer setting
CCS	60	[Cmd switching]	-	Cd1 Cd2 LI1 LI2 LI3 LI4 LI5 LI6 C111 C112 C113 C114 C115 C211 C212 C213 C214 C215	[ch1 active] : Control channel = channel 1 [ch2 active] : Control channel = channel 2 [LI1]: Logic input LI1 [LI2]: Logic input LI2 [LI3]: Logic input LI3 [LI4]: Logic input LI4 [LI5]: Logic input LI5 [LI6]: Logic input LI6 [C111]: Bit 11 of Modbus control word [C112]: Bit 12 of Modbus control word [C113]: Bit 13 of Modbus control word [C114]: Bit 14 of Modbus control word [C115]: Bit 15 of Modbus control word [C211]: Bit 11 of network control word [C212]: Bit 12 of network control word [C213]: Bit 13 of network control word [C214]: Bit 14 of network control word [C215]: Bit 15 of network control word	Cd1	
Cd1	59	[Cmd channel 1]	-	tEr LOC LCC Mdb nEt	[Terminal]: Control via terminals [Local]: Control via keypad [Remot. HMI]: Control via remote display terminal [Modbus]: Control via Modbus [Network]: Control via the network	tEr	
Cd2	60	[Cmd channel 2]	-	tEr LOC LCC Mdb nEt	[Terminal]: Control via terminals [Local]: Control via keypad [Remot. HMI]: Control via remote display terminal [Modbus]: Control via Modbus [Network]: Control via the network	Mdb	
CFG	45 49 61 90	[Macro configuration]	-	StS Std	[Start/Stop]: Start/stop configuration [Factory set.]: Factory configuration	Std	
CHCF	59	[Profile]	-	SIM SEP	[Not separ.]: Combined [Separate]: Separate	SIM	
CHP	87	[Motor switching]	-	nO LI1 LI2 LI3 LI4 LI5 LI6 Cd11 Cd12 Cd13 Cd14 Cd15	[No]: Not assigned [LI1]: Logic input LI1 [LI2]: Logic input LI2 [LI3]: Logic input LI3 [LI4]: Logic input LI4 [LI5]: Logic input LI5 [LI6]: Logic input LI6 [CD11]: Bit 11 of the control word from a communication network [CD12]: Bit 12 of the control word from a communication network [CD13]: Bit 13 of the control word from a communication network [CD14]: Bit 14 of the control word from a communication network [CD15]: Bit 15 of the control word from a communication network	nO	
CL1	38	[Current Limitation]	In	0.25 to 1.5	-	1.5	
CL2	38 86	[I Limit. 2 value]	In	0.25 to 1.5	-	1.5	
CnF	103	[Network fault]	-	-	-	-	
COd	103	[PIN code 1]	-	OFF On 8888	[OFF]: No code is locking access [ON]: A code is locking access. Access is unlocked.	-	

Index of parameter codes and customer settings

Code	Page	Name	Unit	Value/Possible function		Factory setting	Customer setting
COL	95	[CANopen fault mgt]	-	nO YES rMP FSt	[Ignore]: Ignore [Freewheel]: Detected fault management with freewheel stop [Ramp stop]: Detected fault management with stop on ramp [Fast stop]: Detected fault management with fast stop	YES	
COP	60	[Copy channel 1<>2]	-	nO SP Cd ALL	[No]: No copy [Reference]: Copy reference [Command]: Copy command [Cmd + ref.] : Copy command and reference	nO	
COS	42	[Motor 1 Cosinus Phi]	-	0.5 to 1	-	In accordance with the drive rating	
COS2	88	[Motor 2 Cosinus Phi]	-	0.5 to 1	-	In accordance with the drive rating	
CrH3	48	[AI3 max. value]	mA	4 to 20	-	20	
CrL3	48	[AI3 min. value]	mA	0 to 20	-	4	
Ctd	39	[Current threshold]	In	0 to 1.5	-	1	
dCF	66	[Differential current fault]	-	0 to 10	-	4	
dCI	67	[DC injection assign.]	-	nO LI1 LI2 LI3 LI4 LI5 LI6 Cd11 Cd12 Cd13 Cd14 Cd15	[No]: Not assigned [LI1]: Logic input LI1 [LI2]: Logic input LI2 [LI3]: Logic input LI3 [LI4]: Logic input LI4 [LI5]: Logic input LI5 [LI6]: Logic input LI6 [CD11]: Bit 11 of the control word from a communication network [CD12]: Bit 12 of the control word from a communication network [CD13]: Bit 13 of the control word from a communication network [CD14]: Bit 14 of the control word from a communication network [CD15]: Bit 15 of the control word from a communication network	nO	
dE2	32 64	[Deceleration 2]	s	In accordance with Inr	-	5	
dEC	32 63	[[Deceleration]	s	In accordance with Inr	-	3	
dO	48	[Analog./logic output]	-	nO OCr OFr Otr OPr FLt rUn FtA FLA CtA SrA tSA bLC APL	[No]: Not assigned [I motor]: Motor current [Motor freq.]: Motor frequency [Motor torq.]: Motor torque [P. supplied]: Power supplied by the drive [Drive fault]: Detected fault. [Drv running]: Drive running [Freq. limit]: Frequency threshold reached [HSP limit]: High speed reached [Brake seq.]: Current threshold reached [Freq. ref.]: Frequency reference reached [Drv thermal]: Motor thermal threshold reached [Brake seq.]: Brake sequence [No 4-20mA]: Loss of 4-20 mA signal	nO	
drn	96	[Derated operation]	-	nO YES	[No]: Function inactive [Yes]: Function active	nO	

Index of parameter codes and customer settings

Code	Page	Name	Unit	Value/Possible function		Factory setting	Customer setting
dSP	78	[-Speed assignment]	-	nO LI1 LI2 LI3 LI4 LI5 LI6	[No]: Not assigned [LI1]: Logic input LI1 [LI2]: Logic input LI2 [LI3]: Logic input LI3 [LI4]: Logic input LI4 [LI5]: Logic input LI5 [LI6]: Logic input LI6	nO	
EPL	93	[External fault mgt]	-	nO YES rMP FSt	[Ignore]: Ignore [Freewheel]: Detected fault management with freewheel stop [Ramp stop]]: Detected fault management with stop on ramp [Fast stop]: Detected fault management with fast stop	YES	
ErCO	98	[Error code]	-	0 1 2 3 4	No error Bus off Life time CAN overrun Heartbeat	-	
EtF	93	[External fault ass.]	-	nO LI1 LI2 LI3 LI4 LI5 LI6 Cd11 Cd12 Cd13 Cd14 Cd15	[No]: Not assigned [LI1]: Logic input LI1 [LI2]: Logic input LI2 [LI3]: Logic input LI3 [LI4]: Logic input LI4 [LI5]: Logic input LI5 [LI6]: Logic input LI6 [CD11]: Bit 11 of the control word from a communication network [CD12]: Bit 12 of the control word from a communication network [CD13]: Bit 13 of the control word from a communication network [CD14]: Bit 14 of the control word from a communication network [CD15]: Bit 15 of the control word from a communication network	nO	
FbS	36 81	[PID fbk scale factor]	-	0.1 to 100	-	1	
FCS	46 49 61 90	[Restore config.]	-	nO rEC1 In1	[NO]: Function inactive [Internal]: The current configuration becomes identical to the backup configuration previously saved by SCS = Str1. [Factory Set.]: Current configuration replaced by the configuration selected by the CFG parameter.	nO	
FLG	33	[FreqLoopGain]	%	1 to 100	-	20	
FLG2	39 88	[FreqLoopGain 2]	%	1 to 100	-	20	
FLO	99	[Forced local assign.]	-	nO LI1 LI2 LI3 LI4 LI5 LI6	[No]: Not assigned [LI1]: Logic input LI1 [LI2]: Logic input LI2 [LI3]: Logic input LI3 [LI4]: Logic input LI4 [LI5]: Logic input LI5 [LI6]: Logic input LI6	nO	
FLOC	99	[Forced local Ref.]	-	AI1 AI2 AI3 AIU1 LCC	[AI1]: Analog input AI1, logic inputs LI [AI2]: Analog input AI2, logic inputs LI [AI3]: Analog input AI3, logic inputs LI [Network AI]: Jog dial, RUN/STOP buttons [HMI]: Remote display terminal, RUN/STOP/FWD/REV buttons	AI1	
FLr	93	[Catch on the fly]	-	nO YES	[No]: Function inactive [Yes]: Function active	nO	

Index of parameter codes and customer settings

Code	Page	Name	Unit	Value/Possible function		Factory setting	Customer setting
Fr1	29 58	[Ref.1 channel]	-	AI1 AI2 AI3 AIU1 UPdt UPdH LCC Mdb nEt	[AI1]: Analog input AI1 [AI2]: Analog input AI2 [AI3]: Analog input AI3 [Network AI]: Jog dial [+/-Speed]: +/- speed reference via L1 [+/-spd HMI]: +/- speed reference using the jog dial on the ATV312 keypad [HMI]: Reference via the remote display terminal [Modbus]: Reference via Modbus [Network]: Reference via network	AI1	
Fr2	58	[Ref.2 channel]	-	nO AI1 AI2 AI3 AIU1 UPdt UPdH LCC Mdb nEt	[No]: Not assigned [AI1]: Analog input AI1 [AI2]: Analog input AI2 [AI3]: Analog input AI3 [Network AI]: Jog dial [+/-Speed]: +/- speed reference via L1 [+/-spd HMI]: +/- speed reference using the jog dial on the ATV312 keypad [HMI]: Reference via the remote display terminal [Modbus]: Reference via Modbus [Network]: Reference via network	nO	
FrH	101	[Frequency ref.]	Hz	0 to 500	-	-	
FrS	41	[Rated motor freq.]	Hz	10 to 500	-	50	
FrS2	87	[Nom. motor 2 freq.]	Hz	10 to 500	-	50	
Frt	64	[Ramp 2 threshold]	Hz	0 to 500	-	0	
FSt	66	[Fast stop]	-	nO LI1 LI2 LI3 LI4 LI5 LI6 Cd11 Cd12 Cd13 Cd14 Cd15	[No]: Not assigned [LI1]: Logic input LI1 [LI2]: Logic input LI2 [LI3]: Logic input LI3 [LI4]: Logic input LI4 [LI5]: Logic input LI5 [LI6]: Logic input LI6 [CD11]: Bit 11 of the control word from a communication network [CD12]: Bit 12 of the control word from a communication network [CD13]: Bit 13 of the control word from a communication network [CD14]: Bit 14 of the control word from a communication network [CD15]: Bit 15 of the control word from a communication network	nO	
Ftd	39	[Freq. threshold]	Hz	0 to 500	-	bFr	
HSP	33	[High speed]	Hz	LSP to tFr	-	bFr	
Ibr	85	[Brake release I FW]	In	0 to 1.36	-	In accordance with the drive rating	
IdC	34 67	[DC inject. level 1]	In	0 to In	-	0.7	
InH	96	[Fault inhibit assign.]	-	nO LI1 LI2 LI3 LI4 LI5 LI6	[No]: Not assigned [LI1]: Logic input LI1 [LI2]: Logic input LI2 [LI3]: Logic input LI3 [LI4]: Logic input LI4 [LI5]: Logic input LI5 [LI6]: Logic input LI6	nO	

Index of parameter codes and customer settings

Code	Page	Name	Unit	Value/Possible function		Factory setting	Customer setting
Inr	63	[Ramp increment]	-	0.01 0.1 1	[0.01]: Ramp can be set between 0.05 s and 327.6 s. [0.1]: Ramp can be set between 0.1 s and 3,276 s. [1]: Ramp can be set between 1 s and 32,760 s.	0.1	
IPL	94	[Input phase loss]	-	nO YES	[No]: Ignore [Yes]: Detected fault management with fast stop	YES	
ItH	33	[Mot. therm. current]	In	0.2 to 1.5	-	In accordance with the drive rating	
JF2	36	[Skip Frequency 2]	Hz	1 to 500	-	0	
JGF	36 76	[Jog frequency]	Hz	0 to 10	-	10	
JOG	76	[JOG]	-	nO LI1 LI2 LI3 LI4 LI5 LI6	[No]: Not assigned [LI1]: Logic input LI1 [LI2]: Logic input LI2 [LI3]: Logic input LI3 [LI4]: Logic input LI4 [LI5]: Logic input LI5 [LI6]: Logic input LI6	nO	
JPF	36	[Skip Frequency]	Hz	0 to 500	-	0	
LAC	58	[ACCESS LEVEL]	-	L1 L2 L3	[Level 1]: Access to standard functions [Level 2]: Access to advanced functions in the FUn- menu [Level 3]: Access to advanced functions and management of mixed control modes	L1	
LAF	89	[Stop FW limit sw.]	-	nO LI1 LI2 LI3 LI4 LI5 LI6	[No]: Not assigned [LI1]: Logic input LI1 [LI2]: Logic input LI2 [LI3]: Logic input LI3 [LI4]: Logic input LI4 [LI5]: Logic input LI5 [LI6]: Logic input LI6	nO	
LAr	89	[Stop RV limit sw.]	-	nO LI1 LI2 LI3 LI4 LI5 LI6	[No]: Not assigned [LI1]: Logic input LI1 [LI2]: Logic input LI2 [LI3]: Logic input LI3 [LI4]: Logic input LI4 [LI5]: Logic input LI5 [LI6]: Logic input LI6	nO	
LAS	89	[Stop type]	-	rMP FSt nSt	[Ramp stop]: On ramp [Fast stop]: Fast stop [Freewheel]: Freewheel stop	nSt	
LC2	86	[Current limit 2]	-	nO LI1 LI2 LI3 LI4 LI5 LI6 Cd11 Cd12 Cd13 Cd14 Cd15	[No]: Not assigned [LI1]: Logic input LI1 [LI2]: Logic input LI2 [LI3]: Logic input LI3 [LI4]: Logic input LI4 [LI5]: Logic input LI5 [LI6]: Logic input LI6 [CD11]: Bit 11 of the control word from a communication network [CD12]: Bit 12 of the control word from a communication network [CD13]: Bit 13 of the control word from a communication network [CD14]: Bit 14 of the control word from a communication network [CD15]: Bit 15 of the control word from a communication network	nO	
LCC	61	[HMI command]	-	nO YES	[No]: Function inactive [Yes]: Enables control of the drive using the STOP/RESET, RUN and FWD/REV buttons on the display terminal	nO	
LCr	101	[Motor current]	A	-	-	-	

Index of parameter codes and customer settings

Code	Page	Name	Unit	Value/Possible function		Factory setting	Customer setting
LEt	93	[External fault config]	-	LO HIG	[Active low]: The external fault is detected when the logic input assigned to EtF changes to state 0. [Active high]: The external fault is detected when the logic input or bit assigned to EtF changes to state 1.	HIG	
LFF	95	[Fallback speed]	Hz	0 to 500	-	10	
LFL	95	[4-20mA loss]	-	nO YES LFF rLS rMP FSt	[Ignore]: Ignore [Freewheel]: Detected fault management with freewheel stop [fallback spd]: The drive switches to the fallback speed. [Spd maint.]: The drive maintains the speed at which it was operating when the fault occurred. [Ramp stop]: Detected fault management with stop on ramp [Fast stop] : Detected fault management with fast stop	YES	
LFr	32 101	[HMI Frequency ref.]	-	0 to HSP	-	-	
LFt	102	[Last fault occurred]	-	bLF CFF CFI CnF COF CrF EEF EPF IF1 IF2 IF3 IF4 LFF nOF ObF OCF OHF OLF OPF OSF PHF SCF SLF SOF tnF USF	[Brake control]: Brake control detected fault [Incorrect config.]: Incorrect configuration [Invalid config.]: Invalid configuration [NETWORK FAULT]: Communication detected fault on the communication card [CANopen com.]: Communication detected fault line 2 (CANopen) [Capa.charg]: Capacitor precharge detected fault [EEPROM]: EEPROM memory detected fault [External]: External fault [INTERNAL FAULT]: Unknown rating [INTERNAL FAULT]: HMI card not recognized or incompatible/display absent [INTERNAL FAULT]: EEPROM detected fault [INTERNAL FAULT]: Industrial EEPROM detected fault [4-20mA]: 4-20 mA loss [No fault]: No fault code saved [Overbraking]: DC bus overvoltage [Overcurrent]: Overcurrent [Drive overheat]: Drive overheating [Motor overload]: Motor overload [Mot. phase]: Motor phase loss [Mains overvoltage]: Line supply overvoltage [Mains phase loss]: Line phase loss [Mot. short circuit]: Motor short-circuit (phase, ground) [Modbus]: Modbus communication detected fault [Overspeed]: Motor overspeed [Auto-tuning]: Auto-tuning detected fault [Undervoltage]: Line supply undervoltage		
LI1A	104	[Config.LI1]	-	-			
LI2A	104	[Config.LI2]	-	-			
LI3A	104	[Config.LI3]	-	-			
LI4A	104	[Config.LI4]	-	-			
LI5A	104	[Config.LI5]	-	-			
LI6A	104	[Config.LI6]	-	-			
LSP	33 85	[Low speed]	Hz	0 to HSP	-	0	
nCr	41	[Rated mot. current]	In	0.25 to 1.5	-	In accordance with the drive rating	
nCr2	88	[Nom. mot. 2 current]	In	0.25 to 1.5	-	In accordance with the drive rating	
nrd	44	[Noise reduction]	-	YES nO	[Yes]: Frequency with random modulation [No]: Fixed frequency	YES	

Index of parameter codes and customer settings

Code	Page	Name	Unit	Value/Possible function		Factory setting	Customer setting
nSP	42	[Rated motor speed]	rpm	0 to 32,760	-	In accordance with the drive rating	
nSP2	88	[Nom. mot. 2 speed]	rpm	0 to 32,760	-	In accordance with the drive rating	
nSt	68	[Freewheel stop ass.]	-	nO LI1 LI2 LI3 LI4 LI5 LI6	[No]: Not assigned [LI1]: Logic input LI1 [LI2]: Logic input LI2 [LI3]: Logic input LI3 [LI4]: Logic input LI4 [LI5]: Logic input LI5 [LI6]: Logic input LI6	nO	
OICt	103	[OPT1 card type]	-			YES	
OHL	94	[Overtemp fault mgt]	-	nO YES rMP FSt	[Ignore]: Ignore [Freewheel]: Detected fault management with freewheel stop [Ramp stop]: Detected fault management with stop on ramp [Fast stop]: Detected fault management with fast stop	YES	
OLL	94	[Overload fault mgt]	-	nO YES rMP FSt	[Ignore]: Ignore [Freewheel]: Detected fault management with freewheel stop [Ramp stop]: Detected fault management with stop on ramp [Fast stop]: Detected fault management with fast stop	YES	
OPL	94	[Output Phase Loss]	-	nO YES OAC	[No]: Function inactive [Yes]: Tripping on OPF [Output cut]: No tripping on [MOTOR PHASE LOSS] (OPF), but output voltage is managed	YES	
OPr	101	[Motor power]	%	-	-	-	
Otr	102	[Motor torque]	%	-	-	-	
PIC	36 81	[PID correct. reverse]	-	nO YES	[No]: Normal [Yes]: Reverse	nO	
PIF	81	[PID feedback ass.]	-	nO AI1 AI2 AI3	[No]: Not assigned [AI1]: Analog input AI1 [AI2]: Analog input AI2 [AI3]: Analog input AI3	nO	
PII	83	[Act. internal PID ref.]	-	nO YES	[No]: The reference for the PI regulator is Fr1, except for UPdH and UPdt. [Yes]: The reference for the PI regulator is provided internally via the rPI parameter.	nO	
Pr2	81	[2 preset PID ref.]	-	nO LI1 LI2 LI3 LI4 LI5 LI6 Cd11 Cd12 Cd13 Cd14 Cd15	[No]: Not assigned [LI1]: Logic input LI1 [LI2]: Logic input LI2 [LI3]: Logic input LI3 [LI4]: Logic input LI4 [LI5]: Logic input LI5 [LI6]: Logic input LI6 [CD11]: Bit 11 of the control word from a communication network [CD12]: Bit 12 of the control word from a communication network [CD13]: Bit 13 of the control word from a communication network [CD14]: Bit 14 of the control word from a communication network [CD15]: Bit 15 of the control word from a communication network	nO	

Index of parameter codes and customer settings

Code	Page	Name	Unit	Value/Possible function		Factory setting	Customer setting
Pr4	82	[4 preset PID ref.]	-	nO LI1 LI2 LI3 LI4 LI5 LI6 Cd11 Cd12 Cd13 Cd14 Cd15	[No]: Not assigned [LI1]: Logic input LI1 [LI2]: Logic input LI2 [LI3]: Logic input LI3 [LI4]: Logic input LI4 [LI5]: Logic input LI5 [LI6]: Logic input LI6 [CD11]: Bit 11 of the control word from a communication network [CD12]: Bit 12 of the control word from a communication network [CD13]: Bit 13 of the control word from a communication network [CD14]: Bit 14 of the control word from a communication network [CD15]: Bit 15 of the control word from a communication network	nO	
PS16	74	[16 preset speeds]	-	nO LI1 LI2 LI3 LI4 LI5 LI6 Cd11 Cd12 Cd13 Cd14 Cd15	[No]: Not assigned [LI1]: Logic input LI1 [LI2]: Logic input LI2 [LI3]: Logic input LI3 [LI4]: Logic input LI4 [LI5]: Logic input LI5 [LI6]: Logic input LI6 [CD11]: Bit 11 of the control word from a communication network [CD12]: Bit 12 of the control word from a communication network [CD13]: Bit 13 of the control word from a communication network [CD14]: Bit 14 of the control word from a communication network [CD15]: Bit 15 of the control word from a communication network	nO	
PS2	73	[2 preset speeds]	-	nO LI1 LI2 LI3 LI4 LI5 LI6 Cd11 Cd12 Cd13 Cd14 Cd15	[No]: Not assigned [LI1]: Logic input LI1 [LI2]: Logic input LI2 [LI3]: Logic input LI3 [LI4]: Logic input LI4 [LI5]: Logic input LI5 [LI6]: Logic input LI6 [CD11]: Bit 11 of the control word from a communication network [CD12]: Bit 12 of the control word from a communication network [CD13]: Bit 13 of the control word from a communication network [CD14]: Bit 14 of the control word from a communication network [CD15]: Bit 15 of the control word from a communication network	LI3	
PS4	73	[4 preset speeds]	-	nO LI1 LI2 LI3 LI4 LI5 LI6 Cd11 Cd12 Cd13 Cd14 Cd15	[No]: Not assigned [LI1]: Logic input LI1 [LI2]: Logic input LI2 [LI3]: Logic input LI3 [LI4]: Logic input LI4 [LI5]: Logic input LI5 [LI6]: Logic input LI6 [CD11]: Bit 11 of the control word from a communication network [CD12]: Bit 12 of the control word from a communication network [CD13]: Bit 13 of the control word from a communication network [CD14]: Bit 14 of the control word from a communication network [CD15]: Bit 15 of the control word from a communication network	LI4	
PS8	73	[8 preset speeds]	-	nO LI1 LI2 LI3 LI4 LI5 LI6 Cd11 Cd12 Cd13 Cd14 Cd15	[No]: Not assigned [LI1]: Logic input LI1 [LI2]: Logic input LI2 [LI3]: Logic input LI3 [LI4]: Logic input LI4 [LI5]: Logic input LI5 [LI6]: Logic input LI6 [CD11]: Bit 11 of the control word from a communication network [CD12]: Bit 12 of the control word from a communication network [CD13]: Bit 13 of the control word from a communication network [CD14]: Bit 14 of the control word from a communication network [CD15]: Bit 15 of the control word from a communication network	nO	
PSt	61	[[Stop Key priority]]	-	nO YES	[No]: Function inactive [Yes]: STOP key priority	YES	

Index of parameter codes and customer settings

Code	Page	Name	Unit	Value/Possible function		Factory setting	Customer setting
r1	49	[R1 Assignment]	-	nO FLt rUn FtA FLA CtA SrA tSA APL LI1 to LI6	[No]: Not assigned [No drive flt]: No drive detected fault [Drv running] : Drive running [Freq.Th.att.]: Frequency threshold reached [HSP attain.] : High speed reached [I attained] : Current threshold reached [Freq.ref.att]: Frequency reference reached [Th.mot. att.]: Motor thermal threshold reached [4-20mA]: Loss of 4-20 mA signal [LI1] to [LI6]: Returns the value of the selected logic input	FLt	
r2	49	[R2 Assignment]		nO FLt rUn FtA FLA CtA SrA tSA bLC APL LI1 to LI6	[No]: Not assigned [No drive flt]: No drive detected fault [Drv running] : Drive running [Freq.Th.att.]: Frequency threshold reached [HSP attain.] : High speed reached [I attained] : Current threshold reached [Freq.ref.att]: Frequency reference reached [Th.mot. att.]: Motor thermal threshold reached [Brk control]: Brake sequence [4-20mA]: Loss of 4-20 mA signal [LI1] to [LI6]: Returns the value of the selected logic input	nO	
rFC	59	[Ref. 2 switching]	-	Fr1 Fr2 LI1 LI2 LI3 LI4 LI5 LI6 C111 C112 C113 C114 C115 C211 C212 C213 C214 C215	[ch1 active] : Reference 1 [ch2 active] : Reference 2 [LI1]: Logic input LI1 [LI2]: Logic input LI2 [LI3]: Logic input LI3 [LI4]: Logic input LI4 [LI5]: Logic input LI5 [LI6]: Logic input LI6 [C111]: Bit 11 of Modbus control word [C112]: Bit 12 of Modbus control word [C113]: Bit 13 of Modbus control word [C114]: Bit 14 of Modbus control word [C115]: Bit 15 of Modbus control word [C211]: Bit 11 of network control word [C212]: Bit 12 of network control word [C213]: Bit 13 of network control word [C214]: Bit 14 of network control word [C215]: Bit 15 of network control word	Fr1	
rFr	101	[Output frequency]	Hz	-500 to +500	-	-	
rIG	36 81	[PID integral gain]	-	0.01 to 100	-	1	
rOt	61	[Rotating direction]	-	dFr drS bOt	[Forward]: Forward [Reverse]: Reverse [Both]: Both directions are authorized.	dFr	
rP	97	[Product reset]	-	nO YES	[No]: No [Yes]: Yes	nO	
rP2	36 82	[Preset ref. PID 2]	%	0 to 100	-	30	
rP3	36 82	[Preset ref. PID 3]	%	0 to 100	-	60	
rP4	36 82	[Preset ref. PID 4]	%	0 to 100	-	90	
rPG	36 81	[PID prop. gain]	-	0.01 to 100	-	1	
rPI	32 83 101	[Internal PID ref.]	%	0 to 100	-	0	
rPr	97	[Operating t. reset]	-	nO rtH	[No]: No [rst. runtime]: Operating time reset to zero	nO	

Index of parameter codes and customer settings

Code	Page	Name	Unit	Value/Possible function		Factory setting	Customer setting
rPS	64	[Ramp switch ass.]	-	nO LI1 LI2 LI3 LI4 LI5 LI6 Cd11 Cd12 Cd13 Cd14 Cd15	[No]: Not assigned [LI1]: Logic input LI1 [LI2]: Logic input LI2 [LI3]: Logic input LI3 [LI4]: Logic input LI4 [LI5]: Logic input LI5 [LI6]: Logic input LI6 [CD11]: Bit 11 of the control word from a communication network [CD12]: Bit 12 of the control word from a communication network [CD13]: Bit 13 of the control word from a communication network [CD14]: Bit 14 of the control word from a communication network [CD15]: Bit 15 of the control word from a communication network	nO	
rPt	62	[Ramp type]	-	LIn S U CUS	[Linear]: Linear [S ramp]: S ramp [U ramp]: U ramp [Customized]: Customized	LIn	
rrS	48	[Reverse assign.]	-	nO LI1 LI2 LI3 LI4 LI5 LI6	[No]: Not assigned [LI1]: Logic input LI1 [LI2]: Logic input LI2 can be accessed if tCC = 2C. [LI3]: Logic input LI3 [LI4]: Logic input LI4 [LI5]: Logic input LI5 [LI6]: Logic input LI6	LI2	
rSC	42	[Cold stator resist.]	-	nO InIt 8888	[NO]: Function inactive [Init]: Activates the function Value of cold state stator resistance used	nO	
rSF	92	[Fault reset]	-	nO LI1 LI2 LI3 LI4 LI5 LI6	[No]: Not assigned [LI1]: Logic input LI1 [LI2]: Logic input LI2 [LI3]: Logic input LI3 [LI4]: Logic input LI4 [LI5]: Logic input LI5 [LI6]: Logic input LI6	nO	
rSL	38 83	[PID wake up thresh.]	%	0 to 100	-	0	
rtH	102	[Run time]	Time	-	-	-	
SA2	71	[Summing ref. 2]	-	nO AI1 AI2 AI3 AIU1 LCC Mdb nEt	[No]: Not assigned [AI1]: Analog input AI1 [AI2]: Analog input AI2 [AI3]: Analog input AI3 [Network AI]: Jog dial [HMI]: Reference via the remote display terminal [Modbus]: Reference via Modbus [Network]: Reference via network	AI2	
SA3	71	[Summing ref. 3]	-	nO AI1 AI2 AI3 AIU1 LCC Mdb nEt	[No]: Not assigned [AI1]: Analog input AI1 [AI2]: Analog input AI2 [AI3]: Analog input AI3 [Network AI]: Jog dial [HMI]: Reference via the remote display terminal [Modbus]: Reference via Modbus [Network]: Reference via network	nO	
SCS	45 49 61 90	[Saving config.]	-	nO Str1	[No]: Function inactive [Config 1] : Saves the current configuration to EEPROM	nO	
SdC1	35 69	[Auto DC inj. level 1]	In	0 to 1.2	-	0.7	
SdC2	35 70	[Auto DC inj. level 2]	In	0 to 1.2	-	0.5	
SdS	40	[Scale factor display]	-	0.1 to 200	-	30	

Index of parameter codes and customer settings

Code	Page	Name	Unit	Value/Possible function		Factory setting	Customer setting
SFr	40 44	[Switching freq.]	kHz	2. 0 to 16	-	4	
SLL	95	[Modbus fault mgt]	-	nO YES rMP FSt	[Ignore]: Ignore [Freewheel]: Detected fault management with freewheel stop. [Ramp stop]: Detected fault management with stop on ramp [Fast stop]: Detected fault management with fast stop	YES	
SLP	34	[Slip compensation]	%	0 to 150	-	100	
SLP2	39 88	[Slip compensation 2]	%	0 to 150	-	100	
SP10	37 74	[Preset speed 10]	Hz	0 to 500	-	50	
SP11	37 75	[Preset speed 11]	Hz	0 to 500	-	55	
SP12	37 75	[Preset speed 12]	Hz	0 to 500	-	60	
SP13	37 75	[Preset speed 13]	Hz	0 to 500	-	70	
SP14	37 75	[Preset speed 14]	Hz	0 to 500	-	80	
SP15	37 75	[Preset speed 15]	Hz	0 to 500	-	90	
SP16	37 75	[Preset speed 16]	Hz	0 to 500	-	100	
SP2	36 74	[Preset speed 2]	Hz	0 to 500	-	10	
SP3	37 74	[Preset speed 3]	Hz	0 to 500	-	15	
SP4	37 74	[Preset speed 4]	Hz	0 to 500	-	20	
SP5	37 74	[Preset speed 5]	Hz	0 to 500	-	25	
SP6	37 74	[Preset speed 6]	Hz	0 to 500	-	30	
SP7	37 74	[Preset speed 7]	Hz	0 to 500	-	35	
SP8	37 74	[Preset speed 8]	Hz	0 to 500	-	40	
SP9	37 74	[Preset speed 9]	Hz	0 to 500	-	45	
SPd1	101	[Cust. output value]	-	-	-	-	
SPd2	101	[Cust. output value]	-	-	-	-	
SPd3	101	[Cust. output value]	-	-	-	-	
SrF	44	[Speed loop filter]	-	nO YES	[No]: Filter remains active [Yes]: Filter suppressed	nO	
StA	34	[Fr.Loop.Stab]	%	1 to 100	-	20	
StA2	39 88	[Freq. loop stability 2]	%	0 to 100	-	20	

Index of parameter codes and customer settings

Code	Page	Name	Unit	Value/Possible function		Factory setting	Customer setting
StP	96	[UnderV. prevention]	-	nO MMS rMP FSt	[No]: Locking of the drive and freewheel stopping of the motor [DC Maintain]: Stop mode using inertia to maintain the drive power supply as long as possible [Ramp stop]: Stop according to the valid ramp [Fast stop]: Fast stop	nO	
Str	78	[Reference saved]	-	nO rAM EEP	[No]: No saving [RAM]: Saving in RAM [EEprom]: Saving in EEPROM	nO	
Stt	66	[Type of stop]	-	rMP FSt nSt dC1	[Ramp stop]: On ramp [Fast stop]: Fast stop [Freewheel]: Freewheel stop [DC injection]: DC injection stop	rMP	
tA1	33 63	[Begin Acc round]	%	0 to 100	-	10	
tA2	33 63	[End Acc round]	%	0 to (100 - tA1)	-	10	
tA3	33 63	[Begin Dec round]	%	0 to 100	-	10	
tA4	33 63	[End Dec round]	%	0 to (100 - tA3)	-	10	
tAr	92	[Max. restart time]	-	5 10 30 1h 2h 3h Ct	[5 minutes]: 5 minutes [10 minutes]: 10 minutes [30 minutes]: 30 minutes [1 hour]: 1 hour [2 hours]: 2 hours [3 hours]: 3 hours [Unlimited]: Unlimited	5	
tbr	98	[Modbus baud rate]	bps	4.8 9.6 19.2	[4.8 Kbps]: 4,800 bits/second [9.6 Kbps]: 9600 bits/second [19.2 Kbps]: 19,200 bits/second	19.2	
tCC	30 47	[2/3 wire control]	-	2C 3C LOC	[2 wire]: 2-wire control [3 wire]: 3-wire control [Local]: Local control (drive RUN/STOP/RESET)	2C	
tCt	47	[2 wire type]	-	LEL trn PFO	[Level]: State 0 or 1 [Transition]: Change of state (transition or edge) [Fwd priority]: State 0 or 1, "forward" input takes priority over the "reverse" input	trn	
tdC	34 68	[DC injection time 2]	s	0.1 to 30	-	0.5	
tdC1	34 69	[Auto DC inj. time 1]	s	0.1 to 30	-	0.5	
tdC2	35 70	[Auto DC inj. time 2]	s	0 to 30	-	0	
tFO	98	[Modbus format]	-	8O1 8E1 8n1 8n2	[8-O-1]: 8 data bits, odd parity, 1 stop bit [8-E-1]: 8 data bits, even parity, 1 stop bit [8-N-1]: 8 data bits, no parity, 1 stop bit [8-N-2]: 8 data bits, no parity, 2 stop bits	8E1	
tFr	44	[Max frequency]	Hz	10 to 500	-	60	
tHd	101	[Drv. Therm att.]	-	-	-	-	
tHr	101	[Motor thermal state]	-	-	-	-	
tLS	38	[Low speed time out]	s	0 to 999.9	-	0	

Index of parameter codes and customer settings

Code	Page	Name	Unit	Value/Possible function		Factory setting	Customer setting
tnL	95	[Autotune fault mgt]	-	nO YES	[No]: Ignore [Yes]: Detected fault management with drive locked	YES	
ttd	39	[Motor therm. level]	%	1 to 118	-	100	
ttO	98	[Modbus time out]	s	0. 1 to 30	-	10	
tUn	43	[Auto tuning]	-	nO YES dOnE rUn POn LI1 to LI6	[No]: Auto-tuning not performed [Yes]: Auto-tuning performed as soon as possible [Done]: Use of the values given the last time auto-tuning was performed [Drv running]: Auto-tuning performed every time a run command is sent [Power on]: Auto-tuning performed on every power-up [LI1] to [LI6]: Auto-tuning performed on the transition from 0 ➜ 1 of a logic input assigned to this function	nO	
tUS	43 103	[Auto tuning state]	-	tAb PEnd PrOG FAIL dOnE Strd	[Not done]: Default stator resistance value used to control the motor [Pending]: Auto-tuning requested but not yet performed [In progress]: Auto-tuning in progress [Failed]: Auto-tuning failed [Done]: Stator resistance measured by the auto-tuning function used to control the motor [Entered R1]: Cold state stator resistance used to control the motor	tAb	
UdP	103	[Drv.Soft.Ver]	-	-	-	-	
UFr	33	[IR compensation]	%	0 to 100	-	20	
UFr2	39 88	[IR compensation 2]	%	0 to 100	-	20	
UFt	44	[U/F mot 1 selected]	-	L P n nLd	[Cst. torque]: Constant torque [Var. torque] : Variable torque [SVC]: Flux vector control [Energy sav.]: Energy saving	n	
UFt2	88	[U/F mot.2 selected]	-	L P n nLd	[Cst. torque]: Constant torque [Var. torque] : Variable torque [SVC]: Flux vector control [Energy sav.]: Energy saving	n	
ULn	101	[Mains voltage]	V	-	-	-	
UnS	41	[Rated motor volt.]	V	-	-	In accordance with the drive rating	
UnS2	87	[Nom. mot. 2 volt.]	V	-	-	In accordance with the drive rating	

efesotomasyon - telemecanique inverter