Changes for the Better

MITSUBISHI ELECTRIC

SPLIT-TYPE, HEAT PUMP AIR CONDITIONER

Revision:
- MXZ-24UV -E2 has been added.
- Please void OB287.

No. OB287
REVISED EDITION-A

SERVICE MANUAL

Inverter-controlled multi system
Model

MXZ-24UV -E1
MXZ-24UV -E2

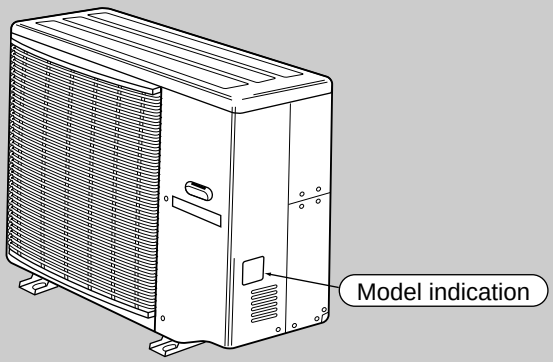

CONTENTS

This manual describes technical data of the outdoor unit.
For the indoor unit refer to the service manuals No. OB229, OB227 REVISED EDITION-B, OB252, OB212, OB239 and OC165 of corresponding models.

1 TECHNICAL CHANGES

MXZ-24UV -E1 → MXZ-24UV -E2

1. Combinations of the connectable indoor units have increased.
2. Noise filter P.C. board has changed to improve the capacity for protecting the inverter-controlled circuit when the voltage higher than the rated one is aupplied with the inverter-controlled circuit.
3. Noise filter P.C. board for “E1” and “E2” are not interchangeable.
4. Service parts have been changed as follows according to above change;
   - The value of R(resistor)has changed. 10Ω → 20Ω
   - TB6(terminal block) has been removed.

2 PART NAMES AND FUNCTIONS

OUTDOOR UNIT

MXZ-24UV-E1
MXZ-24UV-E2

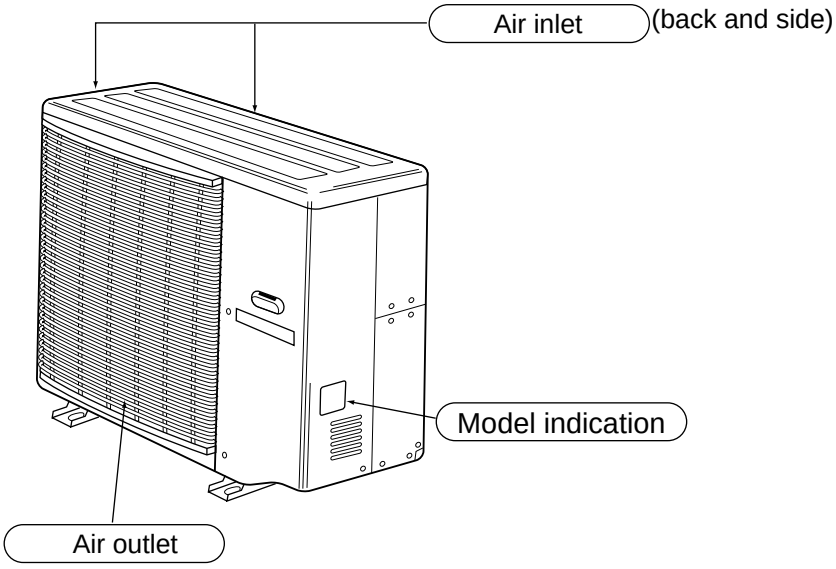

3 INDOOR / OUTDOOR CORRESPONDENCE TABLE

NOTE: SLH-1AR is equivalent to class 09 (9000BTU).
MCFH-13NV, SEH-1.6AR, SLH-1.6AR is equivalent to class 12 (12000BTU).
MCFH-18NV, SEH-2AR,SLH-2AR is equivalent to class 18 (18000BTU).

	OUTDOOR UNIT
	MXZ-24UV-E1 , MXZ-24UV-E2
Combination of the connectable indoor units	07+07
	07+09
	07+12
	07+18
	09+09
	09+12
	09+18
	12+12
	12+18
	18+18
	07+07+07
	07+07+09
	07+07+12
	07+07+18
	07+09+09
	07+09+12
	07+09+18
	09+09+09
	09+09+12

❋There is no combination other than this table.

4 INDOOR UNITS COMBINATION

MXZ-24UV - E1 , MXZ-24UV - E2

NOTE: Electrical data is for outdoor unit only.

Indoor units combination	Cooling capacity (kW)				Outdoor unit power consumption (W)	Current (A)	Power factor (%)
	Unit A	Unit B	Unit C	Total			
07	2.2	—	—	2.2 (0.9-2.7)	750 (260-930)	3.62	90
09	2.8	—	—	2.8 (0.9-3.2)	900 (260-1040)	4.35	90
12	4.0	—	—	4.0 (0.9-4.5)	1440 (260-1700)	6.96	90
18	5.0	—	—	5.0 (0.9-5.4)	2300 (260-2980)	11.11	90
07+07	2.2	2.2	—	4.4 (1.8-5.4)	1540 (580-1960)	7.44	90
07+09	2.2	2.8	—	5.0 (1.8-5.8)	1620 (580-2050)	7.83	90
07+12	2.2	4.0	—	6.2 (1.8-6.7)	2280 (580-2540)	11.01	90
07+18	2.15	4.95	—	7.1 (1.8-7.6)	2980 (580-3450)	14.40	90
09+09	2.8	2.8	—	5.6 (1.8-6.2)	1900 (580-2180)	9.18	90
09+12	2.8	4.0	—	6.8 (1.8-7.4)	2730 (580-3230)	13.19	90
09+18	2.55	4.55	—	7.1 (1.8-7.6)	2980 (580-3450)	14.40	90
12+12	3.55	3.55	—	7.1 (1.8-7.6)	2980 (580-3450)	14.40	90
12+18	3.15	3.95	—	7.1 (1.8-7.6)	2980 (580-3450)	14.40	90
18+18	3.55	3.55	—	7.1 (1.8-7.6)	2980 (580-3450)	14.40	90
07+07+07	2.2	2.2	2.2	6.6 (2.4-8.1)	1850 (700-3650)	8.94	90
07+07+09	2.15	2.15	2.8	7.1 (2.4-8.5)	2080 (700-4070)	10.05	90
07+07+12	1.85	1.85	3.4	7.1 (2.4-8.5)	2080 (700-4070)	10.05	90
07+07+18	1.65	1.65	3.8	7.1 (2.4-8.5)	2080 (700-4070)	10.05	90
07+09+09	2.0	2.55	2.55	7.1 (2.4-8.5)	2080 (700-4070)	10.05	90
07+09+12	1.75	2.2	3.15	7.1 (2.4-8.5)	2080 (700-4070)	10.05	90
07+09+18	1.55	2.0	3.55	7.1 (2.4-8.5)	2080 (700-4070)	10.05	90
09+09+09	2.37	2.37	2.37	7.1 (2.4-8.5)	2080 (700-4070)	10.05	90
09+09+12	2.05	2.05	3.0	7.1 (2.4-8.5)	2080 (700-4070)	10.05	90

NOTE: SLH-1AR is equivalent to class 09 (9000BTU).
MCFH-13NV, SEH-1.6AR, SLH-1.6AR is equivalent to class 12 (12000BTU).
MCFH-18NV, SEH-2AR,SLH-2AR is equivalent to class 18 (18000BTU).

NOTE: Electrical data is for outdoor unit only.

Indoor units combination	Heating capacity (kW)				Outdoor unit power consumption (W)	Current (A)	Power factor (%)
	Unit A	Unit B	Unit C	Total			
07	3.2	—	—	3.2 (0.9-4.1)	1130 (270-1600)	5.46	90
09	4.0	—	—	4.0 (0.9-4.8)	1320 (270-1700)	6.38	90
12	6.0	—	—	6.0 (0.9-7.2)	1900 (270-2570)	9.23	90
18	7.1	—	—	7.1 (0.9-7.8)	2300 (270-2830)	11.11	90
07+07	3.2	3.2	—	6.4 (1.8-7.2)	1930 (470-2300)	9.32	90
07+09	3.2	4.0	—	7.2 (1.8-8.7)	2050 (470-2680)	9.90	90
07+12	3.2	5.4	—	8.6 (1.8-10.6)	2550 (470-3800)	12.32	90
07+18	2.8	6.2	—	9.0 (1.8-10.9)	2730 (470-3880)	13.19	90
09+09	4.0	4.0	—	8.0 (1.8-10.1)	2350 (470-3560)	11.35	90
09+12	3.5	5.3	—	8.8 (1.8-10.8)	2640 (470-3850)	12.75	90
09+18	3.25	5.75	—	9.0 (1.8-10.9)	2730 (470-3880)	13.19	90
12+12	4.5	4.5	—	9.0 (1.8-10.9)	2730 (470-3880)	13.19	90
12+18	4.1	4.9	—	9.0 (1.8-10.9)	2730 (470-3880)	13.19	90
18+18	4.5	4.5	—	9.0 (1.8-10.9)	2730 (470-3880)	13.19	90
07+07+07	2.87	2.87	2.87	8.6 (2.1-10.6)	2420 (520-3000)	11.69	90
07+07+09	2.75	2.75	3.5	9.0 (2.1-10.9)	2500 (520-3180)	12.08	90
07+07+12	2.3	2.3	4.4	9.0 (2.1-10.9)	2500 (520-3180)	12.08	90
07+07+18	2.15	2.15	4.7	9.0 (2.1-10.9)	2500 (520-3180)	12.08	90
07+09+09	2.6	3.2	3.2	9.0 (2.1-10.9)	2500 (520-3180)	12.08	90
07+09+12	2.2	2.7	4.1	9.0 (2.1-10.9)	2500 (520-3180)	12.08	90
07+09+18	2.0	2.5	4.5	9.0 (2.1-10.9)	2500 (520-3180)	12.08	90
09+09+09	3.0	3.0	3.0	9.0 (2.1-10.9)	2500 (520-3180)	12.08	90
09+09+12	2.55	2.55	3.9	9.0 (2.1-10.9)	2500 (520-3180)	12.08	90

NOTE: SLH-1AR is equivalent to class 09 (9000BTU).
MCFH-13NV, SEH-1.6AR, SLH-1.6AR is equivalent to class 12 (12000BTU).
MCFH-18NV, SEH-2AR,SLH-2AR is equivalent to class 18 (18000BTU).

5 SPECIFICATION

	Outdoor model		**MXZ-24UV - E1 , MXZ-24UV - E2**	
	Outdoor unit power supply		Single phase 230V,50Hz	
System	Indoor units number		2 to 3	
	Indoor units total capacity (Connectable)		✻2 Total model name 34 (3 indoor units) / 36 (2 indoor units)	
	Indoor units total capacity (Simultaneous operation)		✻2 Total model name 34 (3 indoor units) / 36 (2 indoor units)	
	Piping total length		Max. 50	
	Connecting pipe length		Max. 25	
	Height difference (Indoor ~ Outdoor)		10	
	Height difference (Indoor ~ Indoor)		10	
	Function		Cooling	Heating
Capacity	Capacity	kW	7.1 (0.9~8.5)	9.0 (0.9~10.9)
	Dehumidification	ℓ /h	—	—
	Outdoor air flow	m³ /h	2520	
Electrical data	Power outlet	A	25	
	Running current	A	10.05	12.08
	Power input	W	2080 (260~4070)	2500 (270~3180)
	Auxiliary heater	A(kW)	—	
	Crankcase heater	W	—	
	Power factor	%	90.0	
	Starting current	A	12.08	
	Compressor motor current	A	8.7	9.1
	Fan motor current	A	0.6	
	Coefficient of performance(C.O.P)		2.68	3.35
Compressor	Model		THV247FBA (ROTARY)	
	Output	W	2000	
	Winding resistance(at20℃)	Ω	U-V 0.61 V-W 0.61 W-U 0.61	
Fan motor	Model		RA6V60-BA	
	Winding resistance(at20℃)	Ω	WHT-BLK 78.7 BLK-YLW 26.9 YLW-BLU 11.7 BLU-RED 83.6	
	Dimensions W×H×D	mm	900×900×320 (+35)	
	Weight	kg	78	
Special remarks	Sound level (High)	dB	46	47
	Fan speed (High)	rpm	550	
	Fan speed regulator		3	
	Refrigerant filling capacity(R22)	kg	3.9	
	Refrigerating oil (Model)	cc	870 (MS-56)	
	Thermistor RT61	kΩ	13.4 (at 100℃)	
	Thermistor RT62	kΩ	10.0 (at 25℃)	
	Thermistor RT63	kΩ	10.0 (at 25℃)	
	Thermistor RT65	kΩ	17.0 (at 50℃)	
	Thermistor RT66,67	kΩ	10.0 (at 25℃)	
	Thermistor RT68	kΩ	10.0 (at 25℃)	

NOTE: Test conditions are based on ISO5151 (Refrigerant piping length (one way): 5m)

✻1 Electrical data is for only outdoor unit.
✻2 However, please refer to “INDOOR/OUTDOOR CORRESPONDENCE TABLE” of page 3 for the combination.

TEST CONDITIONS COOLING INDOOR DB27.0°C WB19.0°C
OUTDOOR DB35.0°C WB24.0°C
HEATING INDOOR DB20.0°C
OUTDOOR DB 7.0°C WB 6.0°C

6 NOISE CRITERIA CURVES

NOTCH	SPL(dB(A))	LINE
COOL	46	●——●
HEAT	47	▲——▲

MXZ-24UV - E1
MXZ-24UV - E2

Test conditions.
Cooling :DB35℃ WB24℃
Heating :DB 7℃ WB 6℃

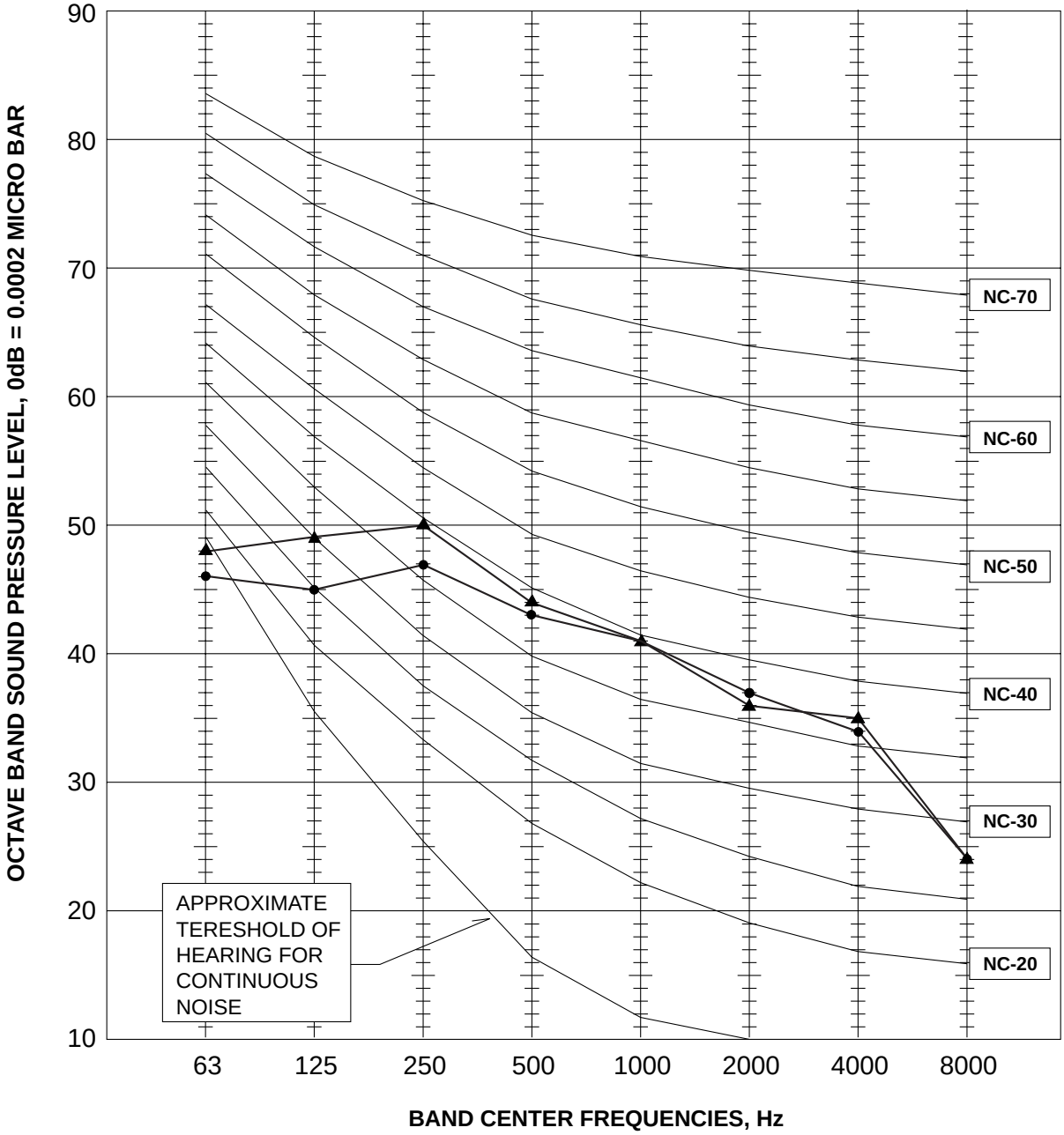

7 OUTLINES AND DIMENSIONS

OUTDOOR UNIT

Unit: mm

MXZ-24UV - E1
MXZ-24UV - E2

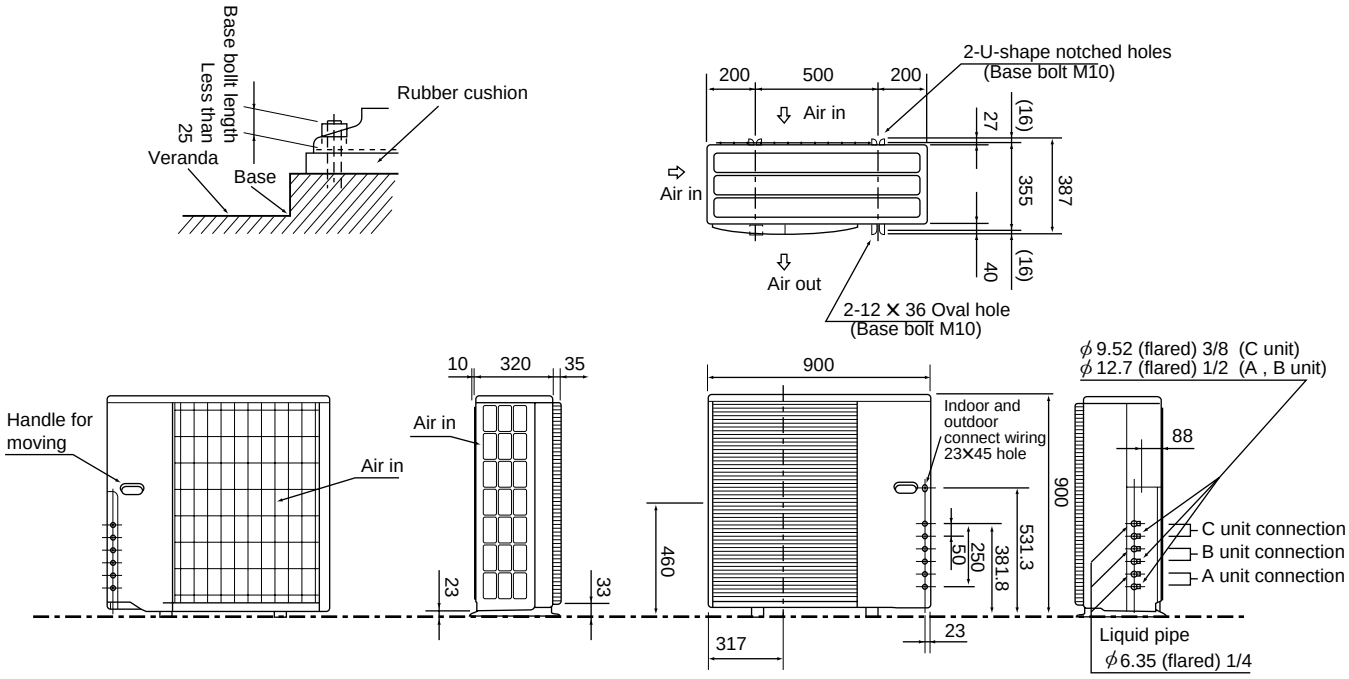

1.Installation space

Note : Leave front and both sides clearance fully.

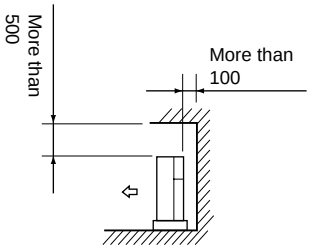

Note : Obsacle on front and rear sid only.
The unit can be used by attaching an optional outdoor outlet guide (MAC-855SG)
(but both sides and the top are opend.)

Note : Leave front and overhead clearance fully.

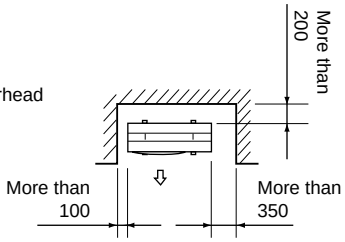

Note : Leave front, overhead and both clearance fully.

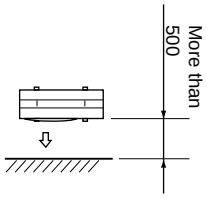

2.Service space

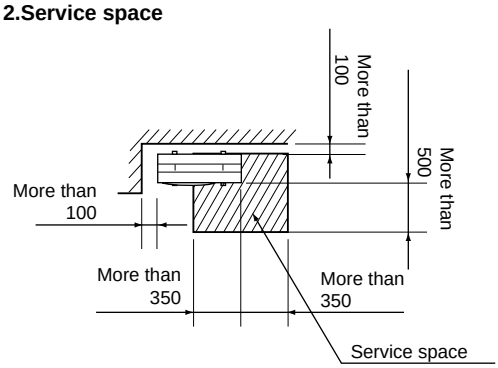

8 WIRING DIAGRAM

OUTDOOR UNIT

MODELS MXZ-24UV- E1

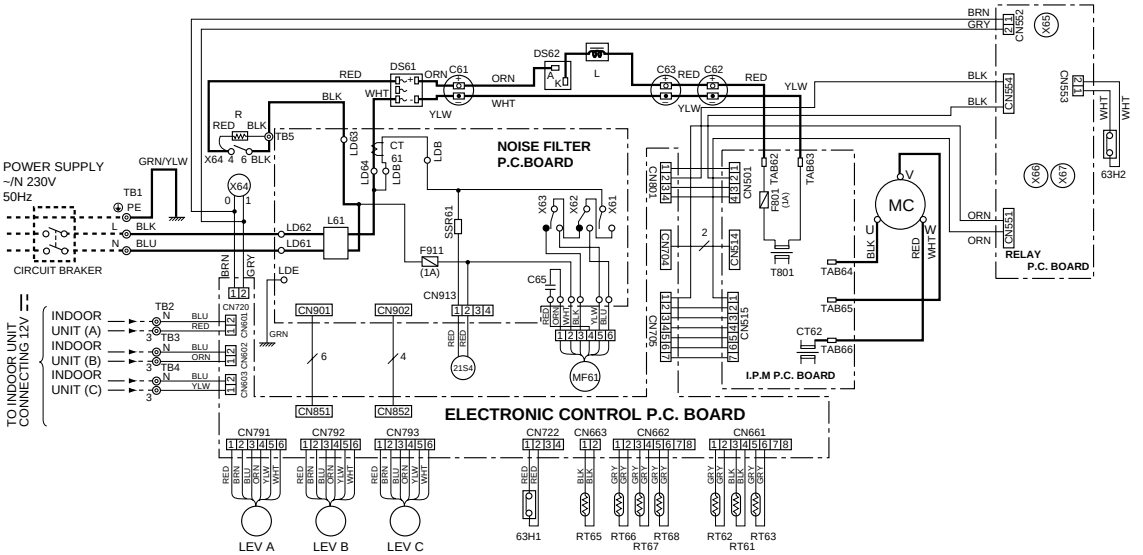

SYMBOL	NAME	SYMBOL	NAME	SYMBOL	NAME
C61	POWER FACTOR CAPACITOR	LEV A~C	EXPANSION VALVE	SSR61	SOLENOID COIL RELAY
C62,63	SMOOTHING CAPACITOR	MC	COMPRESSOR	T801	TRANSFORMER
C65	OUTDOOR FAN CAPACITOR	MF61	FAN MOTOR (INNER PROTECTOR)	TB1,2,3,4,5	TERMINAL BLOCK
CT61,62	CURRENT TRANSFORMER	R	RESISTOR	X61,62,63	FAN MOTOR RELAY
DS61	DIODE MODULE	RT61	DISCHARGE TEMPERATURE THERMISTOR	X64,65	RELAY
DS62	DIODE STACK	RT62	DEFROST TEMPERATURE THERMISTOR	X66,67	RELAY
F801	FUSE (1A)	RT63	EVAPORATION TEMPERATURE THERMISTOR	21S4	R.V. COIL
F911	FUSE (1A)	RT65	FIN TEMPERATURE THERMISTOR	63H1	HIGH PRESSURE SWITCH
L	REACTOR	RT66,67	GUS PIPE TEMPERATURE THERMISTOR	63H2	HIGH PRESSURE SWITCH
L61	COMMON MODE CHOKE COIL	RT68	GUS PIPE TEMPERATURE THERMISTOR		

NOTE: 1. About the indoor side electric wiring refer to the indoor unit electric wiring diagram for servicing.
2.Use copper conductors only. (For field wiring)
3.Symboles below indicate. ◎: Terminal block ☐☐☐☐: Connector

SG79A845H01

MODELS MXZ-24UV- E2

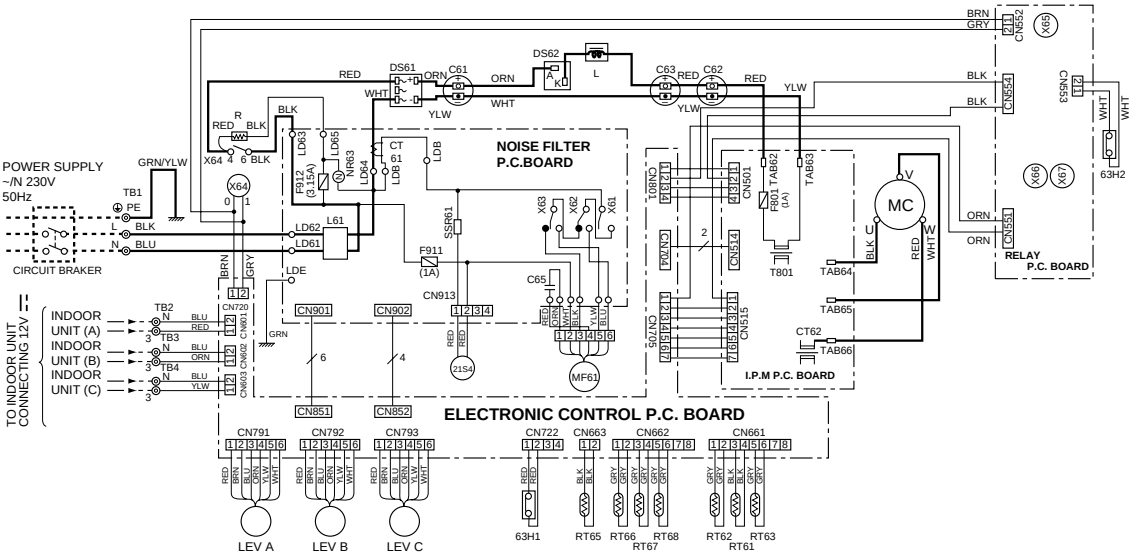

SYMBOL	NAME	SYMBOL	NAME	SYMBOL	NAME
C61	POWER FACTOR CAPACITOR	MC	COMPRESSOR	TB1,2,3,4,5	TERMINAL BLOCK
C62,63	SMOOTHING CAPACITOR	MF61	FAN MOTOR (INNER PROTECTOR)	X61,62,63	FAN MOTOR RELAY
C65	OUTDOOR FAN CAPACITOR	R	RESISTOR	X64,65	RELAY
CT61,62	CURRENT TRANSFORMER	RT61	DISCHARGE TEMPERATURE THERMISTOR	X66,67	RELAY
DS61	DIODE MODULE	RT62	DEFROST TEMPERATURE THERMISTOR	21S4	R.V. COIL
DS62	DIODE STACK	RT63	EVAPORATION TEMPERATURE THERMISTOR	63H1	HIGH PRESSURE SWITCH
F801	FUSE (1A)	RT65	FIN TEMPERATURE THERMISTOR	63H2	HIGH PRESSURE SWITCH
F911	FUSE (1A)	RT66,67	GUS PIPE TEMPERATURE THERMISTOR	F912	FUSE (3.15A)
L	REACTOR	RT68	GUS PIPE TEMPERATURE THERMISTOR	NR63	VARISTOR
L61	COMMON MODE CHOKE COIL	SSR61	SOLENOID COIL RELAY		
LEV A~C	EXPANSION VALVE	T801	TRANSFORMER		

NOTE: 1. About the indoor side electric wiring refer to the indoor unit electric wiring diagram for servicing.
2.Use copper conductors only. (For field wiring)
3.Symboles below indicate. ◎: Terminal block ☐☐☐☐: Connector

SG79Y088H01

9 REFRIGERANT SYSTEM DIAGRAM

MXZ-24UV - E1
MXZ-24UV - E2

Unit:mm

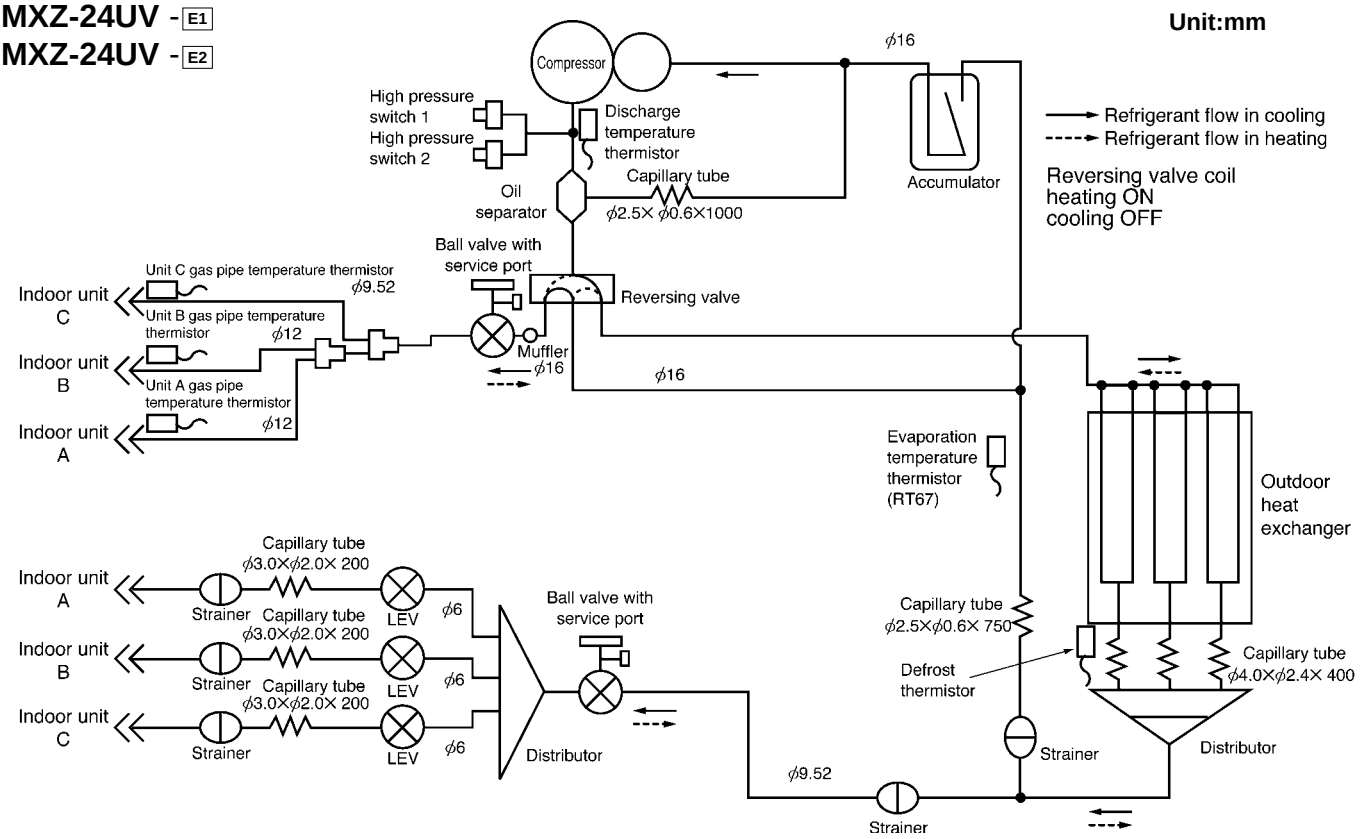

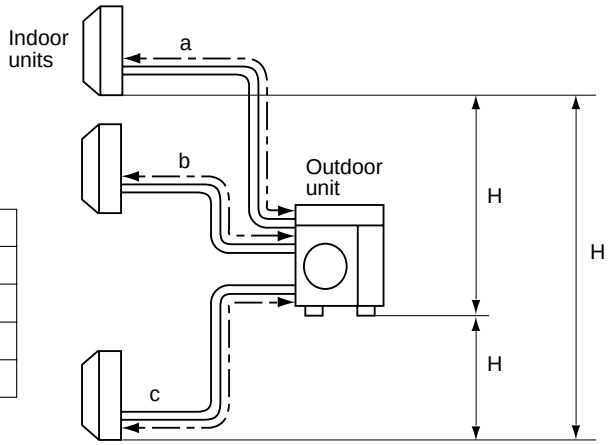

Piping length each indoor unit (a, b, c)	25m
Total piping length (a+b+c)	50m
Height difference between units (H)	10m
Bending point for each unit	25
Total bending point	50

✻It does not matter which unit is higher.

- Refrigerant pipe diameter is different according to indoor unit to be connected. When using extension pipes,refer to the tables below.
- When diameter of refrigerant pipe is different from that of outdoor unit union, use optional Different-diameter pipe.
  For further information on Different-diameter pipe,see page BACK COVER.

Unit : mm (inch)

Indoor unit			Extension pipe diameter	
class	Pipe diameter			
07/09	Liquid	6.35(1/4)	Liquid	6.35(1/4)
	Gas	9.52(3/8)	Gas	9.52(3/8)
12	Liquid	6.35(1/4)	Liquid	6.35(1/4)
	Gas	12.7(1/2)	Gas	12.7(1/2)
18	Liquid	6.35(1/4)	Liquid	6.35(1/4)
	Gas	15.88(5/8)	Gas	15.88(5/8)

Outdoor unit union diameter		
For		
Indoor unit A	Liquid	6.35(1/4)
	Gas	12.7(1/2)
Indoor unit B	Liquid	6.35(1/4)
	Gas	12.7(1/2)
Indoor unit C	Liquid	6.35(1/4)
	Gas	9.52(3/8)

10 PERFORMANCE CURVES

The standard data contained in these specifications apply only to the operation of the air conditioner under normal conditions, since operating conditions vary according to the areas where these units are installed. The following information has been provided to clarify the operating characteristics of the air conditioner under the conditions indicated by the performance curve.

(1) GUARANTEED VOLTAGE

198 ~ 264V

(2) AIR FLOW

Air flow should be set at MAX.

(3) MAIN READINGS

(1) Indoor intake air wet-bulb temperature :	°CWB	Cooling
(2) Indoor outlet air wet-bulb temperature :	°CWB	Cooling
(3) Outdoor intake air dry-bulb temperature :	°CDB	Cooling
(4) Total input:	W	
(5) Indoor intake air dry-bulb temperature :	°CDB	Heating
(6) Outdoor intake air wet-bulb temperature :	°CWB	Heating
(7) Total input :	W	Heating

Indoor air wet/dry-bulb temperature difference on the left side of the chart on page 14 and 15 shows the difference between the indoor intake air wet/dry-bulb temperature and the indoor outlet air wet/dry-bulb temperature for your reference at service.

How to measure the indoor air wet-bulb/dry-bulb temperature difference

1. Attach at least 2 sets of wet-and dry-bulb thermometers to the indoor air intake as shown in the figure, and at least 2 sets of wet-and dry-bulb thermometers to the indoor air outlet. The thermometers must be attached to the position where air speed is high.
2. Attach at least 2 sets of wet-and dry-bulb thermometers to the outdoor air intake.
   Cover the thermometers to prevent direct rays of the sun.
3. Check that the air filter is cleaned.
4. Open windows and doors of room.
5. Press the EMERGENCY OPERATION switch once(twice) to start the EMERGENCY COOL(HEAT) MODE.
6. When system stabilizes after more than 15 minutes, measure temperature and take an average temperature.
7. 10 minutes later, measure temperature again and check that the temperature does not change.

INDOOR UNIT

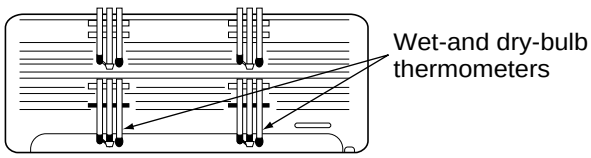

FRONT VIEW

OUTDOOR UNIT

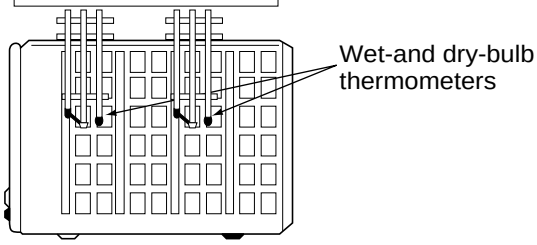

BACK VIEW

10-1.CAPACITY AND THE INPUT CURVES

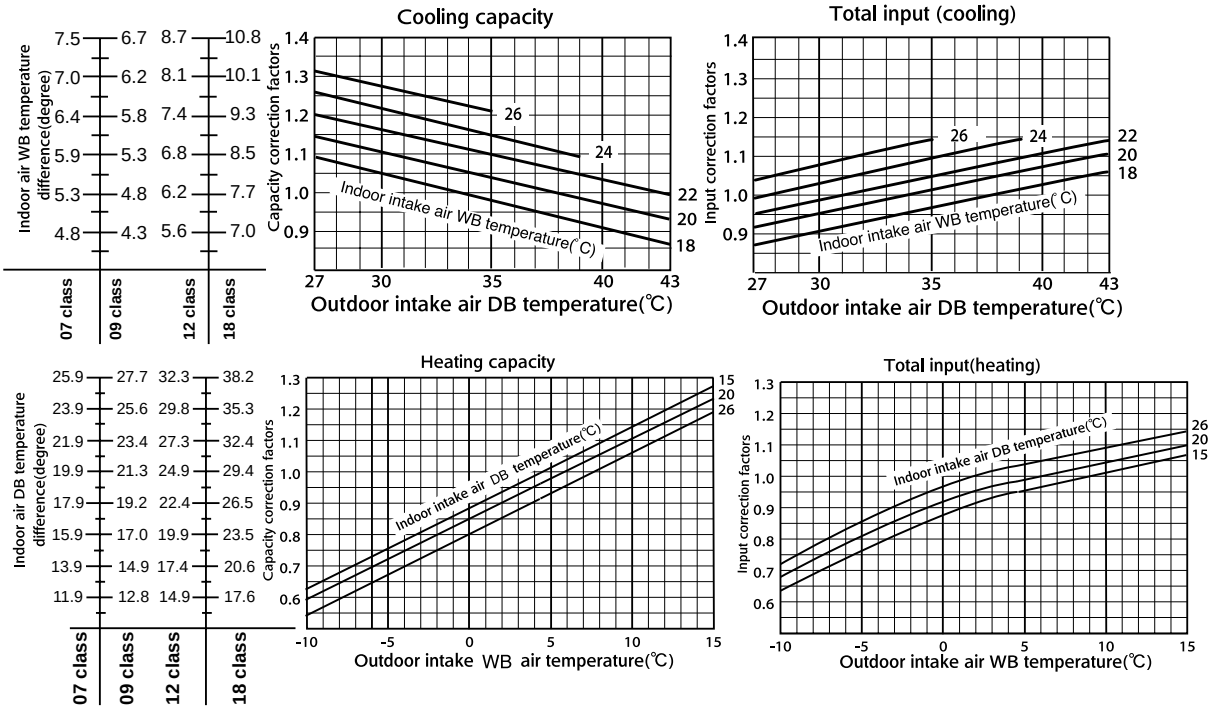

10-2.Capacity and input correction by inverter output frequency

(OUTDOOR UNIT:MXZ-24UV)

NOTE 1 : The dotted line on graphs connects the frequency range in normal operation shown by the full line and the frequency in test run shown by the point.

1. 07-class unit in single operation

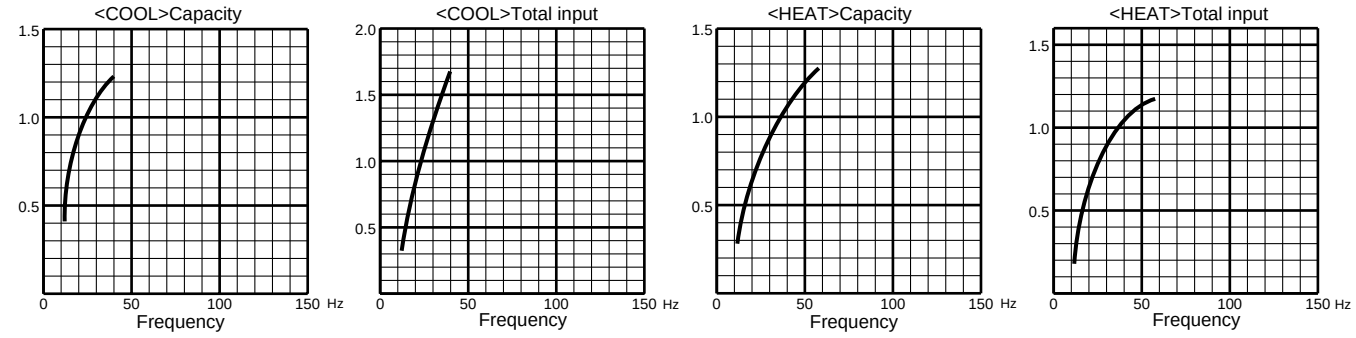

2. 09-class unit in single operation

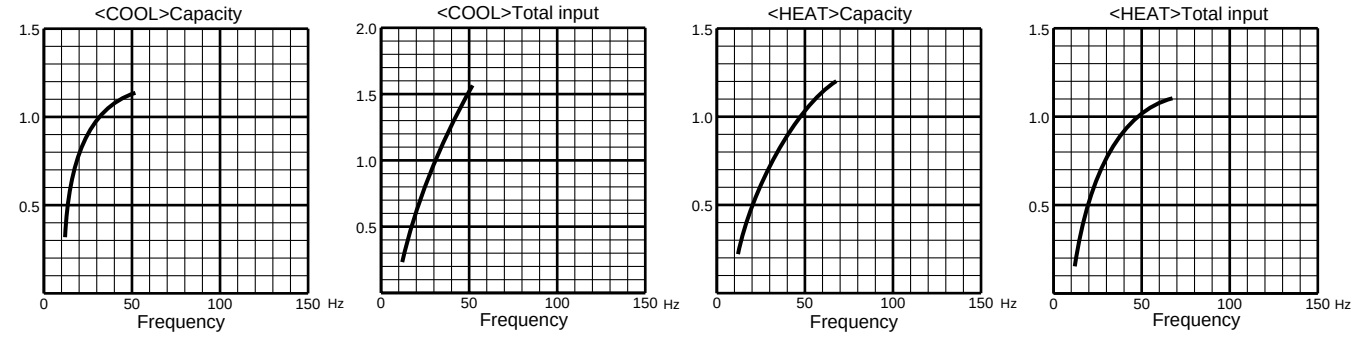

3. 12-class unit in single operation

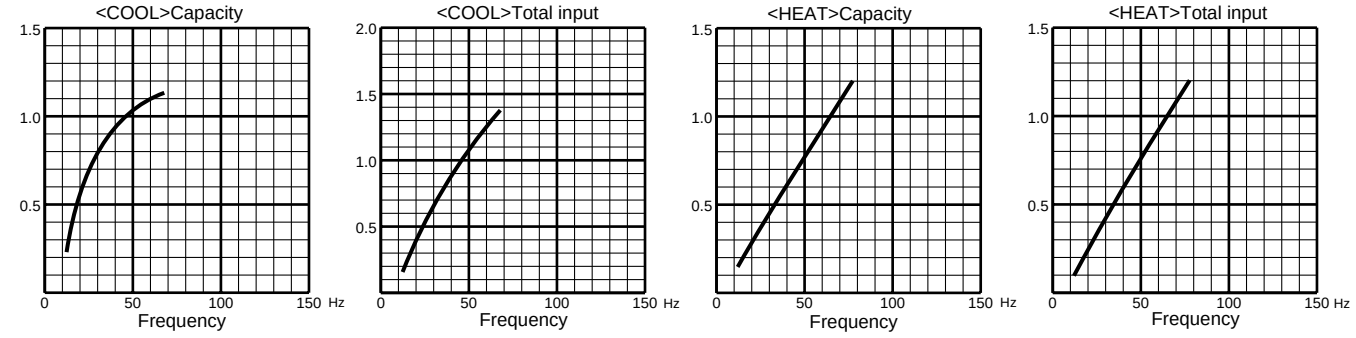

4. 18-class unit in single operation

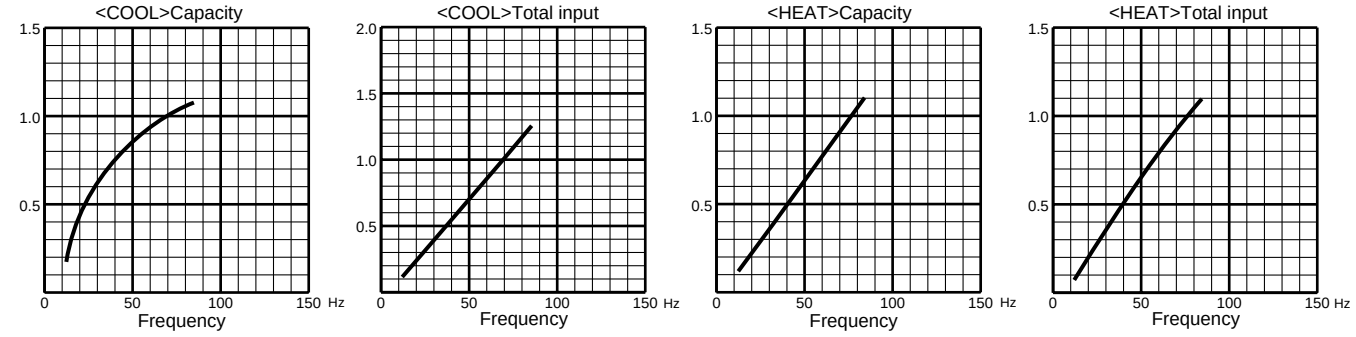

10-3.Outdoor low pressure and outdoor unit current

1. 07-class unit in single operation

NOTE: The unit of pressure has been changed to MPa on the international system of units(SI unit system).
The converted score against the traditional unit system can be gotten according to the formula below.

1(MPa • G) =10.2(kgf/㎠ • G)

(1) COOL operation

①Both indoor and outdoor units are under the same temperature/humidity condition.

Dry-bulb temperature(°C)	Relative humidity(%)
20	50
25	60
30	70

②Air flow speed : HI
③Inverter output frequency : 33Hz

<How to work fixed-frequency operation>
1.Set emergency switch to COOL or HEAT.The switch is located on indoor unit.
2.Press emergency run ON/OFF button.
3.Compressor starts running at rated frequency.
4.Indoor fan runs at HI speed and continues for 30 minutes.
5.To cancel this operation,press emergency run ON/OFF button or any button on remote controller.

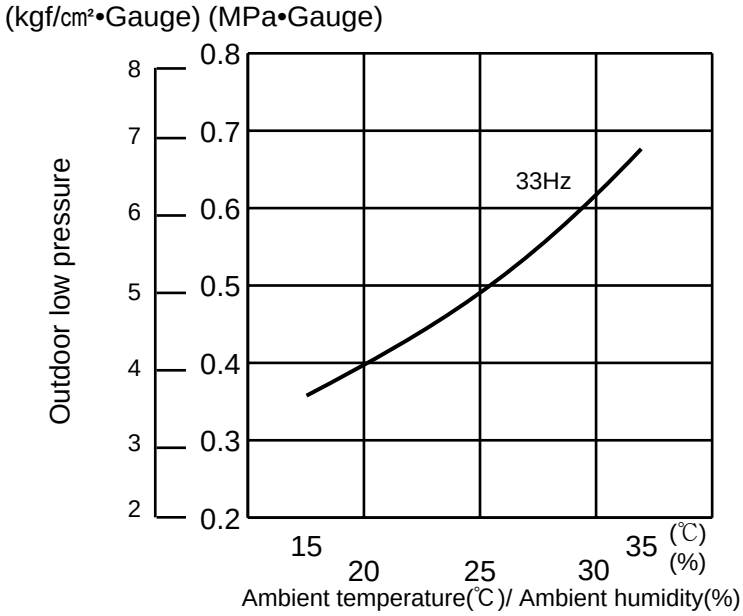

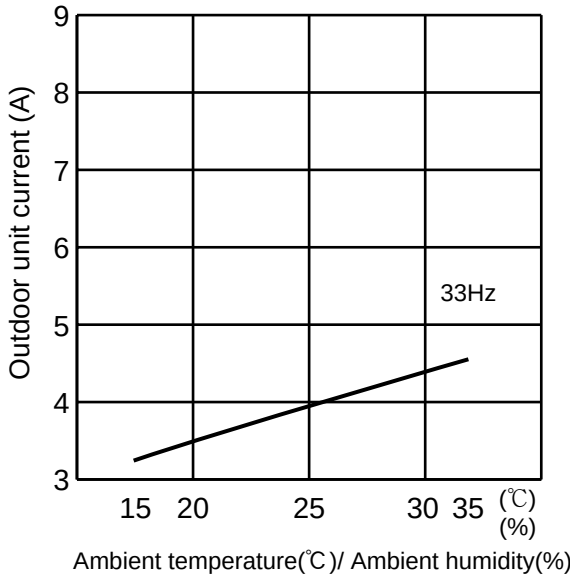

(2) HEAT operation

① Indoor

DB(°C)	20.0
WB(°C)	14.5

Outdoor

DB(°C)	2	7	15	20.0
WB(°C)	1	6	12	14.5

② Set air flow to Hi speed.
③ Inverter output frequency is 45Hz.

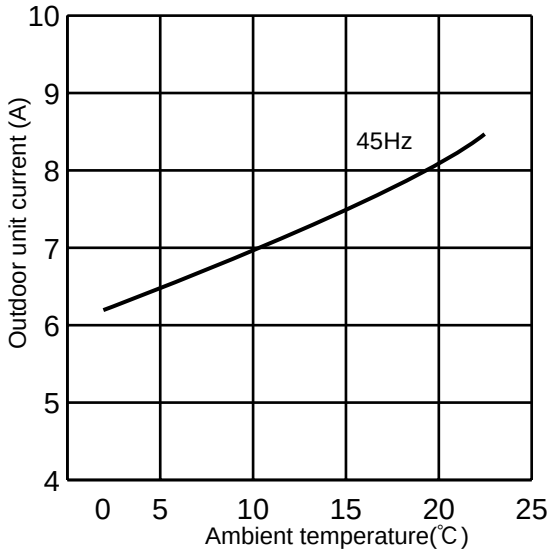

2. 09-class unit in single operation

NOTE: The unit of pressure has been changed to MPa on the international system of units(SI unit system).
The converted score against the traditional unit system can be gotten according to the formula below.

1(MPa • G) =10.2(kgf/㎠ • G)

(1) COOL operation

①Both indoor and outdoor units are under the same temperature/humidity condition.

Dry-bulb temperature(°C)	Relative humidity(%)
20	50
25	60
30	70

②Air flow speed : HI
③Inverter output frequency : 33Hz

<How to work fixed-frequency operation>
1.Set emergency switch to COOL or HEAT.The switch is located on indoor unit.
2.Press emergency run ON/OFF button.
3.Compressor starts running at rated frequency.
4.Indoor fan runs at HI speed and continues for 30 minutes.
5.To cancel this operation,press emergency run ON/OFF button or any button on remote controller.

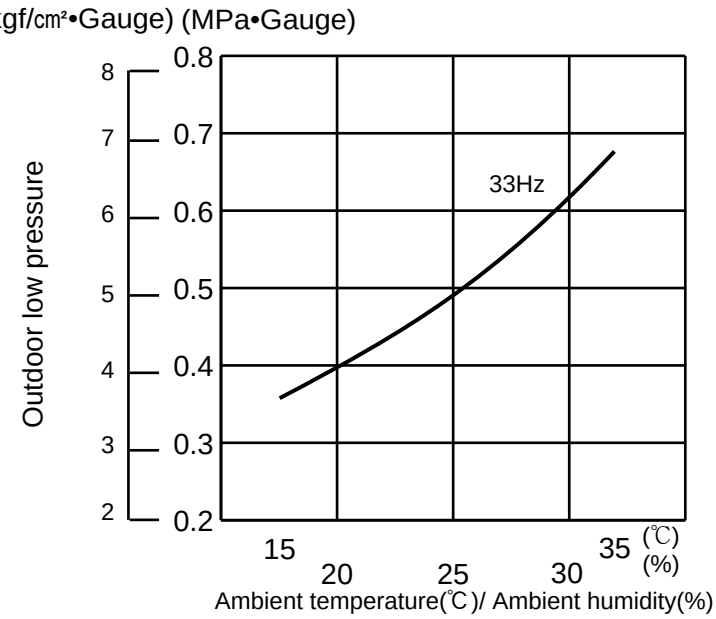

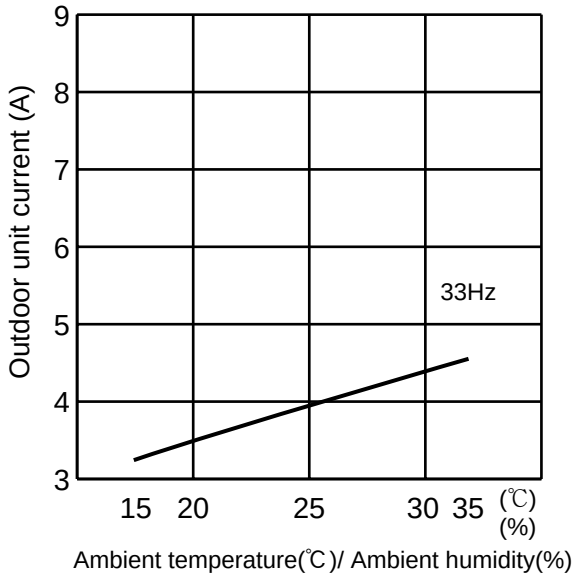

(2) HEAT operation

① Indoor

DB(°C)	20.0
WB(°C)	14.5

Outdoor

DB(°C)	2	7	15	20.0
WB(°C)	1	6	12	14.5

② Set air flow to Hi speed.
③ Inverter output frequency is 45Hz.

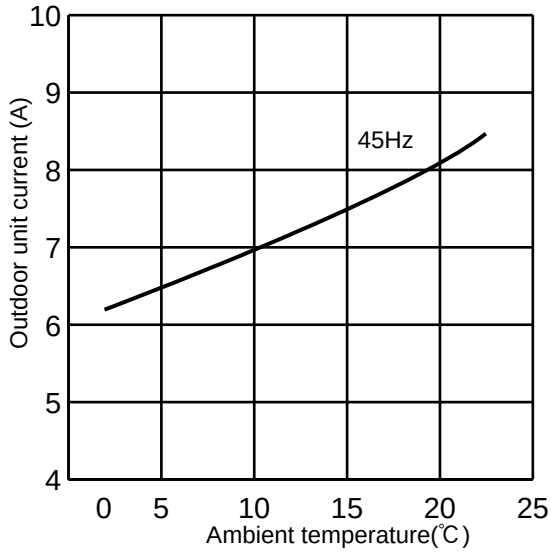

3. 12-class unit in single operation

NOTE: The unit of pressure has been changed to MPa on the international system of units(SI unit system).
The converted score against the traditional unit system can be gotten according to the formula below.

1(MPa • G) =10.2(kgf/㎠ • G)

(1) COOL operation

①Both indoor and outdoor units are under the same temperature/humidity condition.

Dry-bulb temperature(°C)	Relative humidity(%)
20	50
25	60
30	70

②Air flow speed : HI
③Inverter output frequency : 33Hz

<How to work fixed-frequency operation>
1.Set emergency switch to COOL or HEAT.The switch is located on indoor unit.
2.Press emergency run ON/OFF button.
3.Compressor starts running at rated frequency.
4.Indoor fan runs at HI speed and continues for 30 minutes.
5.To cancel this operation,press emergency run ON/OFF button or any button on remote controller.

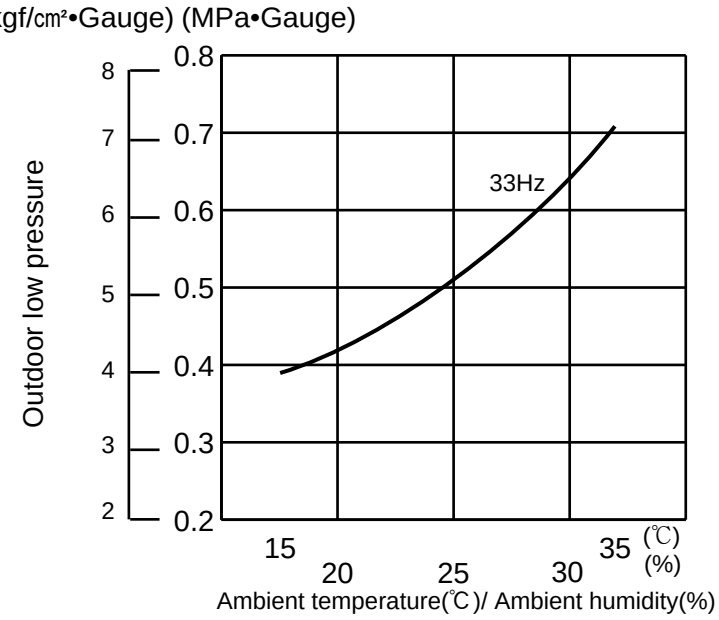

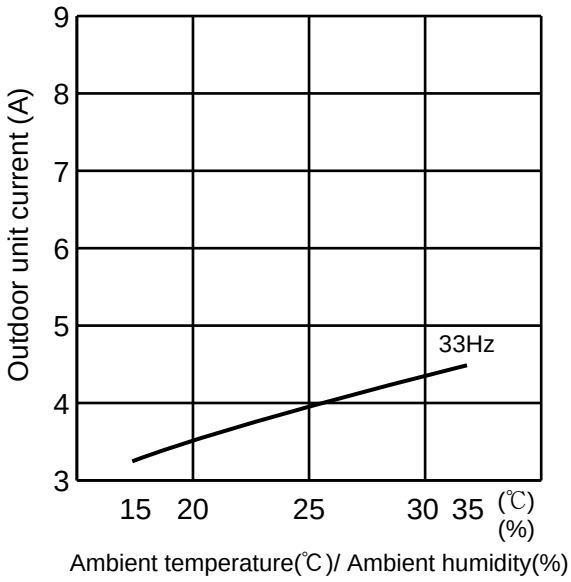

(2) HEAT operation

① Indoor

DB(°C)	20.0
WB(°C)	14.5

Outdoor

DB(°C)	2	7	15	20.0
WB(°C)	1	6	12	14.5

② Set air flow to Hi speed.
③ Inverter output frequency is 45Hz.

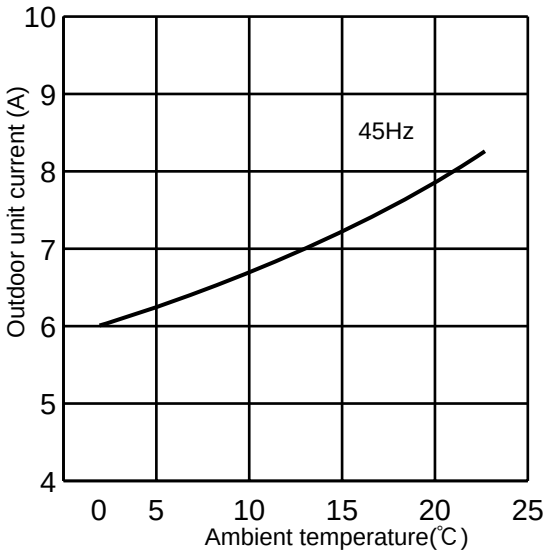

4. 18-class unit in single operation

NOTE: The unit of pressure has been changed to MPa on the international system of units(SI unit system).
The converted score against the traditional unit system can be gotten according to the formula below.

1(MPa • G) =10.2(kgf/㎠ • G)

(1) COOL operation

① Both indoor and outdoor units are under the same temperature/humidity condition.

Dry-bulb temperature(°C)	Relative humidity(%)
20	50
25	60
30	70

② Air flow speed : HI
③ Inverter output frequency : 33Hz

<How to work fixed-frequency operation>
1. Set emergency switch to COOL or HEAT.The switch is located on indoor unit.
2. Press emergency run ON/OFF button.
3. Compressor starts running at rated frequency.
4. Indoor fan runs at HI speed.
5. To cancel this operation,press emergency run ON/OFF button or any button on remote controller.

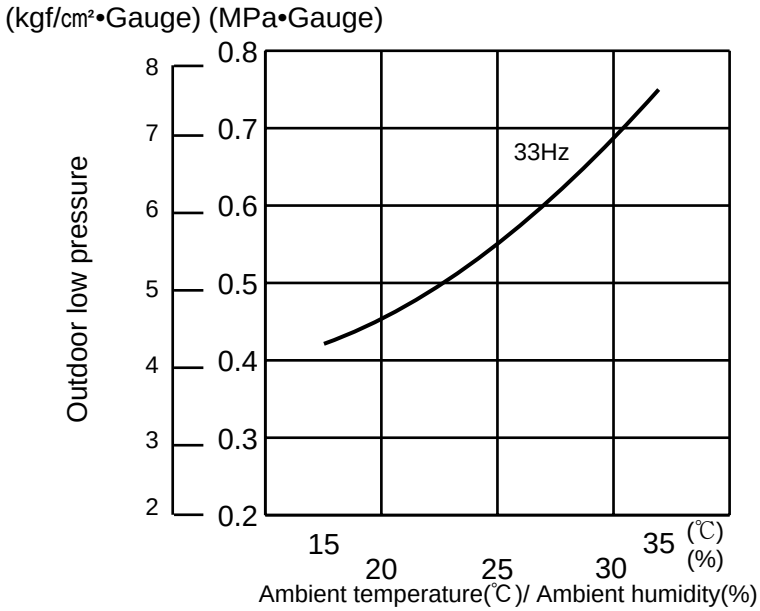

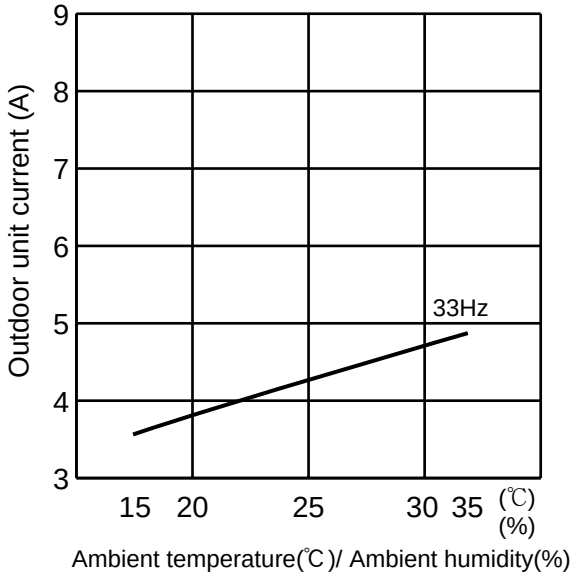

(2) HEAT operation

① Indoor

DB(°C)	20.0
WB(°C)	14.5

Outdoor

DB(°C)	2	7	15	20.0
WB(°C)	1	6	12	14.5

② Set air flow to Hi speed.
③ Inverter output frequency is 45Hz.

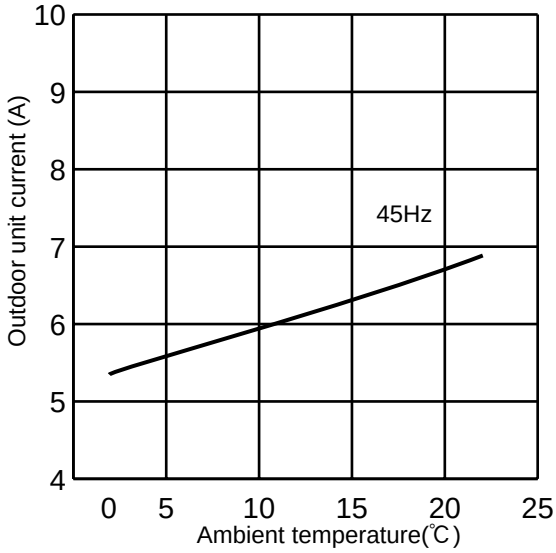

11 MICROPROCESSOR CONTROL

INVERTER MULTI SYSTEM CONTROL

MXZ-24UV -E1
MXZ-24UV -E2

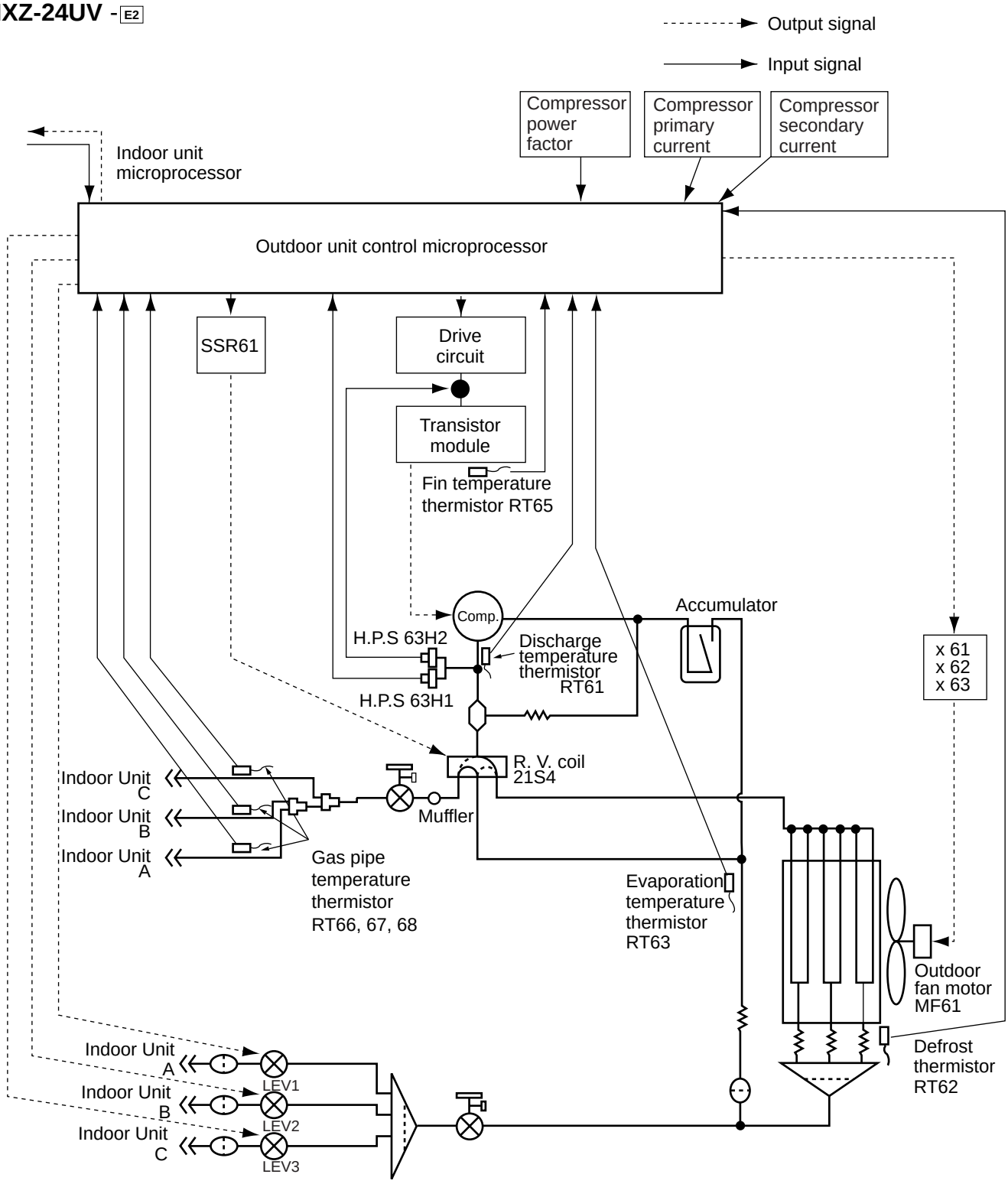

11-1.LEV control

Linear expansion valve (LEV) is controlled by "Thermostat ON" commands given from each unit.

Indoor unit status	LEV opening
Stop of all indoor unit	Opening before stop → 500 pulse in 15 minutes
When outdoor unit is operating, some indoor unit stops and some operates.	COOL : 5 pulse (full closed) HEAT : 59 pulse (slightly opened)
Thermostat OFF in COOL or DRY mode	When the outdoor unit operation (When the other indoor unit operate): 5 pulse. When outdoor unit stops. (When the other indoor unit stops or thermo off): Maintain LEV opening before stop → 500 pulse in 15 minutes
Thermostat ON in COOL or DRY mode	• LEV opening for each indoor unit is determined by adding adjustment in accordance with the number of operating unit and the capacity class to standard opening, based on the operation frequency: Ex.) Opening 130 pulse in standard opening 1 → Minimum 80 pulse, Maximum 205 pulse. (Capacity code 4 at 1 unit operation) (Capacity code 1 at 4 unit operation) • After starting operation, adjustment in accordance with intake super heat, discharge temperature is included in standard opening. ※1 Note: LEV opening in each frequency at DRY operation and COOL operation is the same. However, velocity and compressor operation frequency controls are different. See 10-2 Operational frequency range (As far as the indoor unit velocity control goes, refer to DRY operation in MICROPROCESSOR CONTROL in the indoor unit service manual.)
Thermostat OFF in HEAT mode	• When the outdoor unit operates. (When the other indoor unit operates): 59 pulse • When the outdoor unit stops. (When the other indoor unit stops or thermo off): Maintain LEV opening before stop → 500 pulse in 15 minutes.
Thermostat ON in HEAT mode	• LEV opening for each indoor unit is determined by adding adjustment in accordance with the number of operating unit and the capacity class to standard opening, based on the operation frequency: Ex.) Opening 120 pulse in standard opening 1 → Minimum 70 pulse, Maximum 165 pulse. (Capacity code 4 at 1 unit operation) (Capacity code 1 at 4 unit operation) • After starting operation, opening becomes the one that adjustment in accordance with discharge temperature was added to basic opening. ※1

※1 LEV opening when the outdoor unit operating: Upper limit 500, Lower limit 59

Determination of LEV standard opening in each indoor unit

- The standard opening is on the straight line, which connects an each standard point in the section where divided into seven according to the operation frequency of compressor as shown in the figure below.
  (LEV opening is controlled in proportion to the operation frequency.)

Note: Opening is adjusted at the standard opening according to the indoor unit conditions.
However, inclination of standard opening in each point of opening does not change with the original curve.

- Add opening provided in Difference in Capacity in the table below to the standard opening from 1 to 8, when capacity of the indoor unit is excluding code 1.
- Add opening provided in Difference in Operation number in the table below to determined LEV opening for each indoor unit, when 2 or 3 indoor units are operated at the same time.

Note: Even when the adjusted standard opening exceeds the driving range from 59 to 500 pulse, actual driving output opening is in a range from 59 to 500 pulse.

< Calculation example of LEV opening >

Cool operation: Compressor frequency 70Hz: 2 unit ON: 18class

(170-150)÷(80-60)×(70-60)+150+75-30=205 pulse

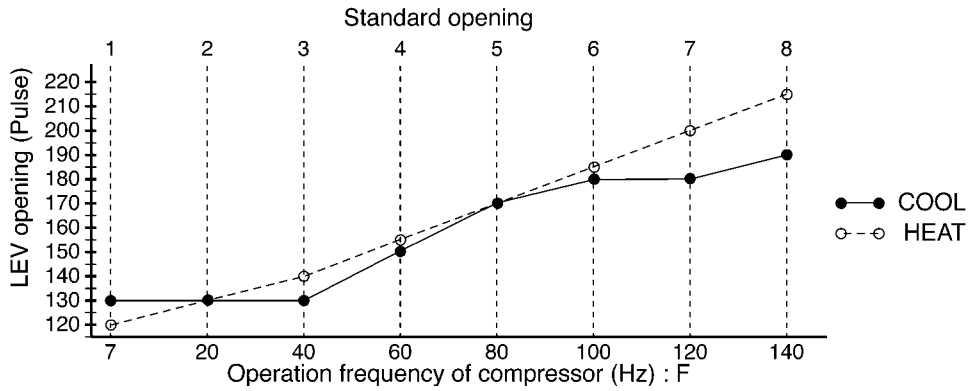

	Standard opening								Difference in capacity			Difference in operation number		
	1	2	3	4	5	6	7	8	Code2	Code3	Code4	2	3	4
COOL	130	130	130	150	170	180	180	190	25	50	75	-30	-40	-50
HEAT	120	130	140	155	170	185	200	215	15	30	45	-10	-40	-50

Capacity code	1	2	3	4
Indoor unit	07	09	12	18

<Correction>

	COOL	DRY	HEAT
① Suction super heat (MIN gas pipe temperature thermistor - Evaporation temperature thermistor)	●	●	—
② Each correction ※ 1 • (Each gas pipe temperature thermistor - Evaporation temperature thermistor) • (Main pipe temperature thermistor - sub pipe temperature thermistor)			
③ Discharge temperature	● ※ 2	● ※ 2	●

※ 1 Perform this, when number of operation units is 2units or more
※ 2 When the correction opening of suction super heat is 0, correct the LEV opening by dischaege temperature.

(1) LEV opening correction by suction super heat (COOL, DRY)
(Suction super heat) = (Minimum gas pipe temperature) - (Evaporation temperature)
When COOL and DRY , correct the LEV openings corrected from the table below

Suction superheat (S.H.)	LEV opening correction (pulse)
more than 12	6
10 to12	4
8 to 10	3
6 to 8	2
6 or less	0

(2) Separate correction (COOL,DRY)
(When number of operation unit is 2 units or more)
(a) Correction by the separate super heat
Correct the LEV separately by temperature difference between each gas pipe temperature thermistor and evaporator temperature thermistor.
① Calculate each super heat of the unit from the expression below;
(Super heat) = (Gas pipe temperature thermistor) - (Evaporation temperature thermistor)
② Select a minimum super heat from among them.
③ Correct an each LEV is corrected opening is corrected by difference between each super heat and minimum super heat.

Difference of superheat	LEV opening correction (pulse)
more than 9	8
6 to9	6
3to 6	2
6 or less	0

(3) LEV opening correction by discharge temperature

When LEV correction output is 0 pulse by the suction super heat at cool or dry operation, or dry operating, correct LEV is corrected according to the following table.

The target discharge temperature is determined according to frequency zone and number of operation unit of the compressor.

Operation frequency of compressor	COOL, DRY				HEAT			
	Number of operating unit.				Number of operating unit.			
	Single	Double	Triple	Quadruple	Single	Double	Triple	Quadruple
Minimum ~ 20	51	60	62	64	55	49	48	47
21 ~ 30	57	64	66	68	58	52	51	50
31 ~ 40	65	68	73	75	63	55	54	53
41 ~ 55	67	72	79	81	70	58	57	56
56 ~ 70	70	77	86	88	80	63	62	61
71 ~ 90	72	83	90	90	85	69	68	67
91 ~ maximum	74	84	90	90	85	74	73	72

Correct the LEV opening according to difference between the target discharge temperature and discharge temperature.

Discharge temperature (℃)	LEV opening correction (pulse)	
	COOL	HEAT
more than Target discharge temperature+11	10	7
Target discharge temperature+11 to Target discharge temperature+8	4	6
Target discharge temperature+8 to Target discharge temperature+5	2	3
Target discharge temperature+5 to Target discharge temperature+2	1	2
Target discharge temperature+2 to Target discharge temperature-2	0	0
Target discharge temperature-2 to Target discharge temperature-5	-1	-1
Target discharge temperature-5 to Target discharge temperature-8	-2	-1
Target discharge temperature-8 to Target discharge temperature-11	-5	-3
Target discharge temperature-11 or less	-8	-7

11-2.Operational frequency range

Number of operating unit	capacity cord	COOL			DRY	HEAT		
		Min.	Max.	Rated		Min.	Max.	Rated
1	1	18	40	32	25	18	62	36
	2		52	40			70	49
	3		68	46			80	65
	4		85	73			86	80
2	2 3	20	80	70	40	22	95	80
	4 5		105	80			105	88
	6 7 8		110	90			115	100
3	3 4 5 6 7 8 9	30	115	71	58	26	120	102

Note: When the fan speed of indoor unit is totally Lo notch, restrict the maximum frequency is restricted in 6/7 of the rated frequency.

DRY	COOL	Maximum frequency
1	1	8/10 of maximum frequency
2	2	
1	2	9/10 of maximum frequency
1	3	
2	1	7/10 of maximum frequency
3	1	

11-3.Heat defrosting control

(1) Conditions to enter defrosting mode
①. When temperature of defrosting thermistor is -3℃ or less.
②.When specified non-defrosting time, is counted in the control p.c.board is satisfied.
(Total time of compressor operating)
Going to defrosting mode at both condition of ① and ②.

(2) Defrosting operation
①. Compressor stops for 50 seconds, Indoor fan is off, Defrosting lamp lights
②.4-way valve reverses flow, Compressor operates by the frequency in heat defrosting control.
③. After compressor stops for 35 seconds, 4-way valve reverses flow, then defrosting finishes.

(3) Conditions to finish defrosting mode
①. When the defrosting thermistor temperature is 8℃ or more.
②. When it has spent 10 minutes for defrosting.
Defrosting finishes at condition of ① or ②.

11-4.High pressure protection

(1) High pressure protection control on heat mode
Temperature of the main pipe temp. thermistor in the indoor unit controls the operation frequency.
When temperature of the main pipe temp. thermistor is approx. 49℃, the operation frequency is set at the current level.
When temperature of the main pipe temp. thermistor is approx. 52℃ the protection control decreases the frequency at the speed of 3Hz a minutes.
When temperature of the main pipe temp. thermistor is approx. 57℃ the protection decreases the frequency at the speed of 4Hz a minute and changes the outdoor fan to Low.
Note: Temperature of the pipe temp. thermistor is different depending on the indoor unit.
Temperature of the pipe temp. thermistor is 45℃ or less, the protection control is Released.

(2) High pressure protection control by high pressure switch (H.P.S)
High-pressure switch controls the operation frequency and outdoor fan motor.
<Control status>
When high-pressure switch is ON.
(When discharge pipe pressure is 2.75 MPa or more.)
<Control details>
(a) When cooling or drying
The protection control decreases the compressor frequency at the speed of 10Hz a minute.
(The compressor operates continuously in min. frequency according to a command to decrease more than the min. level.)
(b) When heating
The protection control decreases the compressor frequency at the speed of 10Hz a minute.
The protection control changes the outdoor fan to Low.
<Release status>
When high-pressure switch is OFF. (When discharge pipe pressure is 2.35 MPa or more.)
Or, the compressor stops.

11-5.Discharge temperature protection control

This protection controls the compressor ON/OFF and operation frequency according to temperature of the discharge temp. thermistor.

(1) Compressor ON/OFF
When temperature of the discharge temp. thermistor exceeds 116℃, the control stops the compressor.
When temperature of the discharge temp. thermistor is 80℃ or less, the controls starts the compressor.

(2) Compressor operation frequency
When temperature of the discharge temp. thermistor is expected to be higher than 116℃, the control decreases 12Hz from the current frequency.
When temperature of the discharge temp. thermistor is expected to be higher than 111℃ and less than 116℃, the control decreases 6Hz from the current frequency.
When temperature of the discharge temp. thermistor is expected to be higher than 104℃ and less than 111℃, the control is set at the current frequency.

11-6.Refrigerant recovery control on heating

<Control status>

The control performs when the following status are satisfied everything;

- When there is 1 unit or more not operating indoor unit on heat operation. (Excluding thermo OFF)
- When discharge temperature becomes 107℃ or more.
- When it passed 60 minutes or more since the operation has started or the last refrigerant recovery has controlled.

<Control details>

LEV opening, which adjusts to not operating indoor unit, is considered to be 80 pulse.

<Control finish status>

The control finishes either as follows. However, the LEV opening is considered to be 59 pulse.

- When it passed 60 seconds since the control has started.
- When the discharge temperature is 90℃ or less.

11-7.Outdoor fan control

Fan speed is switched according to a number of operating indoor unit and the compressor frequency.

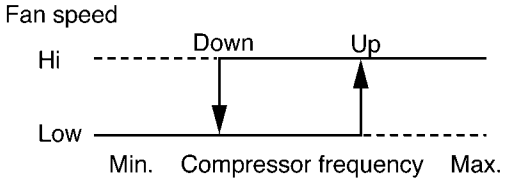

<Relation between compressor frequency and fan speed.>

Mode	Fan speed	Indoor unit operation		
		Single	Double	Triple
COOL	Up	55 Hz	50Hz	50 Hz
	Down	45 Hz	45 Hz	45 Hz
HEAT	Up	60 Hz	45 Hz	40 Hz
	Down	50 Hz	40 Hz	35 Hz

Note

- When operation, fan speed of Hi/ Low mode changes to VHi/ Hi mode by promoting those fan speeds respectively by 1 step after defrosting is operated. This control is cleared, when the compressor off.
- When overheat protection of P.C. board temperature or fin temperature operates, the outdoor fan speed is fixed to VHi mode regardless of compressor frequency. Also, when the overheat protection is cleared, the fan speed is back to normal
- When the indoor coil thermistor is 57℃ or more on HEAT operation, fan speed is fixed to Low notch . Or, the indoor coil thermistor is 45℃ or less on HEAT operation, fan speed is back to normal.

11-8.Relation between main sensor and actuator

Relation between main sensor and actuator.

Sensor	Purpose	Actuator			
		Compressor	LEV	Outdoor fan motor	Reversing valve
Discharge temperature thermistor	Protection	○	○		
Indoor pipe temperature thermistor	Defrosting Protection	○	○	○	
Defrost thermistor	Defrosting	○	○		○
Evaporation temperature thermistor	Control		○		
Gas pipe temperature thermistor	Control		○		
High pressure switch	Protection	○		○	
Fin temperature thermistor	Protection	○		○	
Capacity code	Control	○	○	○	

12 TROUBLESHOOTING

12-1. Cautions on troubleshooting

1. Before troubleshooting, check the following:

1) Check the power supply voltage.
2) Check the indoor/outdoor connecting wire for mis-wiring.

2. Take care the following during servicing.

1) Before servicing the air conditioner, be sure to first turn off the remote controller to stop the unit, and then after confirming the horizontal vane is closed, turn off the breaker and / or disconnect the power plug.
2) Be sure to unplug the power cord before removing the front panel, the cabinet, the top panel, and the electronic control P.C. board.
3) When removing the electronic control P.C. board, hold the edge of the board with care NOT to apply stress on the components.
4) When connecting or disconnecting the connectors, hold the housing of the connector. DO NOT pull the lead wires.

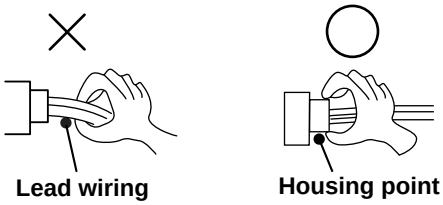

3. Troubleshooting procedure

1) First, check if the OPERATION INDICATOR lamp on the indoor unit is flashing on and off to indicate an abnormality. To make sure, check how many times the abnormality indication is flashing on and off before starting service work.
2) If the electronic control P.C. board is supposed to be defective, check the copper foil pattern for disconnection and the components for bursting and discoloration.
3) When troubleshooting, refer to the flow chart on this page and the check table on page 25, 26.

12-2. Instruction of troubleshooting

- Check the indoor unit with referring to the indoor unit service manual, and confirm that there is any problem in the indoor unit. Then, check the outdoor unit with referring to this page.

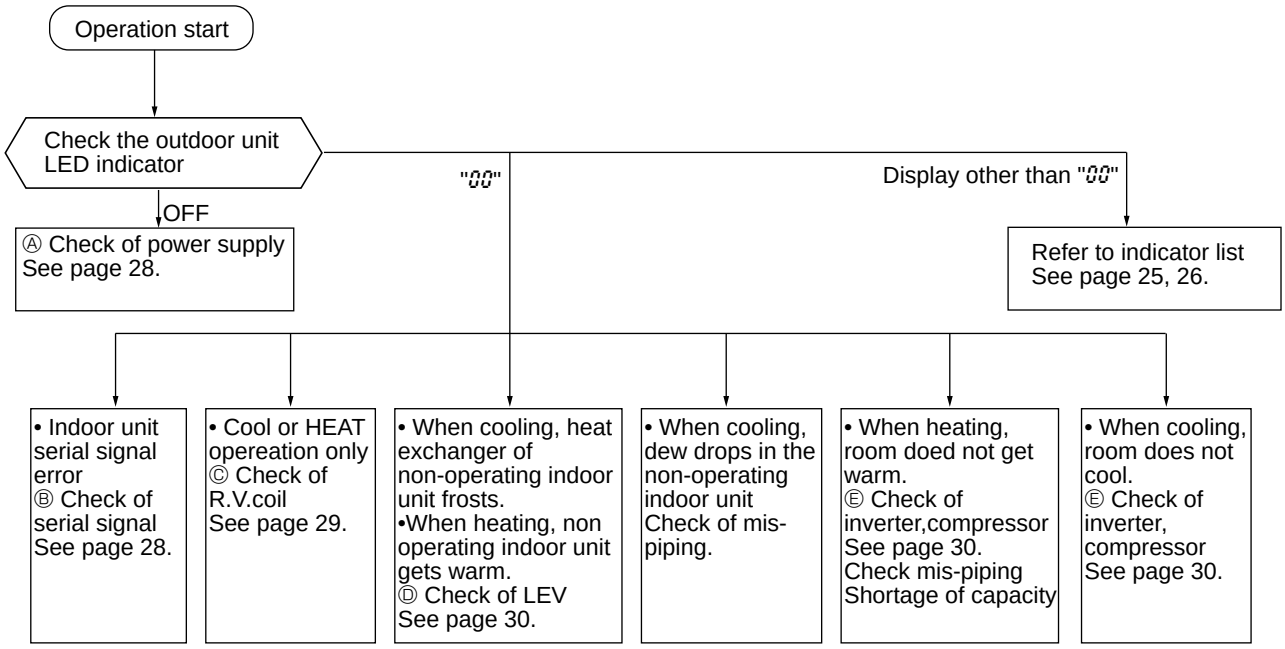

12-3. Troubleshooting check table

Note . LED indicates "00" in the normal status.

7-segment LED display	Error mode
00	Normal

✺ If there is defect in the following parts(electronic control P.C. board, relay P.C. board, high pressure switches(63H1,63H2),indoor /outdoor fan motor , or indoor coil thermistor), the compressor may stop even with the display remained at " 00 ".In any case, reset the breaker and check the above-stated parts.

Symptom	Outdoor unit does not operate.		
Display	Detecting method	Detecting method	Check points
A4 (A4)	Outdoor power system abnormality	When the compressor operation has been interrupted by overcurrent protection continuously three times within 1 minute after start-up, the compressor stops operation.	• Inverter output • Compressor
A3 (A3)	Outdoor electronic control P.C. board abnormality	When the nonvolatile memory data cannot be read properly on the outdoor controller board	• Outdoor electronic control P.C. board
P1 (P1)	Indoor unit and LEV abnormality	When the drain abnormality is detected in the indoor unit and the indoor main coil temperature is too low, or when any abnormality is detected in the components of indoor unit	• Check the abnormality indication on the indoor unit. • LEV

Symptom	Outdoor unit stops and restarts every 3 minutes.		
Display	Detecting method	Detecting method	Check points
E9 (E9)	Evaporation temperature thermistor abnormality	The compressor stops when a short or open circuit occurs in the evaporation temperature thermistor during compressor running.	• Check the characteristic of the evaporation temperature thermistor. Refer to Ⓕ on page 31. • Check the contact of P. C. board connectors.
E6 (E6)	Discharge temperature thermistor abnormality	The compressor stops when a short or open circuit occurs in the discharge temperature thermistor during compressor running.	• Check the characteristic of the discharge temperature thermistor. Refer to Ⓕ on page 31. • Check the contact of P. C. board connectors.
F8 (F8)	Fin temperature thermistor abnormality	The compressor stops when a short or open circuit occurs in the fin temperature thermistor during compressor running.	• Check the characteristic of the fin temperature thermistor. Refer to Ⓕ on page 31. • Check the contact of P.C. board connectors.
A8 (A8)	Overcurrent protection	When over current is applied to the power module, the compressor stops and restarts in 3 minutes.	• Check the inverter and compressor. Refer to Ⓔ on page 30. • Check the amount of gas. • Check the indoor/outdoor air flow for short cycle. • Check the indoor unit air filter for clogging.
d6 (d6)	Discharge temperature overheat protection	When the discharge temperature thermistor detects 116˚C or above, the compressor stops and restarts operation in 3 minutes. (Protection will be released at 100℃ or below.)	• Check the amount of gas and the refrigerant cycle. • Check the outdoor unit air passage.
d4 (d4)	Fin temperature overheat protection	When the fin temperature thermistor detects 89˚C or above, the compressor stops and restarts operation in 3 minutes.	• Check the outdoor unit air passage. • Check the power module. • Check the outdoor fan motor. Refer to Ⓖ on page 31.
d7 (d7)	High pressure protection	When the compressor starts, primary current or output voltage stops the compressor and restarts in 3 minutes.	• Amount of gas • Outdoor unit air passage. • Check the ball valve.
F5 (F5)	Room-A gas pipe temperature thermistor abnormality	When a short or open circuit occurs in the Room-A gas pipe temperature thermistor.	• Room A gas pipe temperature thermistor characteristic. • Contact of P.C. board connectors.
F6 (F6)	Room-B gas pipe temperature thermistor abnormality	When a short or open circuit occurs in the Room-B gas pipe temperature thermistor.	• Room B gas pipe temperature thermistor characteristic. • Contact of P.C. board connectors.
F7 (F7)	Room-C gas pipe temperature thermistor abnormality	When a short or open circuit occurs in the Room-C gas pipe temperature thermistor.	• Room C gas pipe temperature thermistor characteristic. • Contact of P.C. board connectors.

Symptom	Outdoor unit operates. (The compressor operates at reduced frequency.)		
Display	Detecting method	Detecting method	Check points
d8 (d8)	Frequency drop by current protection	When the outdoor unit input current exceeds 22.5 A, the compressor operates at reduced frequency.	These symptoms do not mean any abnormality of the product, but check the following points. • Air filter clogging. • Amount of gas. • Short cycle of indoor/outdoor air flow.
d9 (d9)	Frequency drop by overload protection	When the compressor load exceeds the specified value, the compressor operates at reduced frequency.	
d7 (d7)	Frequency drop by high pressure protection	When indoor pipe temperature exceeds 55˚C during heating, the compressor operates at reduced frequency.	
	Frequency drop by defrosting in cooling	When the indoor pipe temperature falls to 6˚C or below during cooling, the compressor operates at reduced frequency.	
d6 (d6)	Frequency drop by discharge temperature protection	When the discharge temperature exceeds 110˚C, the compressor operates at reduced frequency.	
d3 (d3)	Frequency drop by high pressure switch protection	When the high pressure exceeds 2.75MPa (28 kgf/cm^2-G), the compressor operates at reduced frequency. In addition, the fan speed changes.	• Amount of gas. • Outdoor unit air passage.
d1 (d1)	Low discharge temperature protection	When the state with low discharge temperature of which 50˚C in COOL and 48.4 or less in HEAT for 20 minutes, the compressor operates continuously.	Check the amount of gas. • Replace the outdoor controller board. • Check the contact of LEV board connectors.

Symptom	Outdoor unit operates.		
Display	Detecting method	Detecting method	Check points
E7 (E7)	Defrost thermistor abnormality	When a short or open circuit occurs in the defrost thermistor during heating * In this case, the compressor continues to operate.	• Defrost thermistor characteristic. • Contact of P. C. board connectors.
h4 (h4)	Power factor detection abnormality	When the compressor power factor cannot be detected * In this case, the compressor keeps running.	• Compressor wiring.

12-4. Trouble criterion of main parts

<table>
<tr><th>Part name</th><th>Check method and criterion</th></tr>
<tr><td>Defrost thermistor
Evaporation / Gas pipe temperature thermistor</td><td>Measure the resistance using a tester.
(Part temperature -10°C ~ 40°C)
<table><tr><th>Normal</th><th>abnormal</th></tr><tr><td>5kΩ ~ 55kΩ</td><td>Opened or short-circuited</td></tr></table></td></tr>
<tr><td>Discharge temperature thermistor</td><td>Measure the resistance using a tester, after warming up the thermistor by holding by hand.
(Part temperature : 20°C ~40°C)
<table><tr><th>Normal</th><th>abnormal</th></tr><tr><td>100kΩ ~ 250kΩ</td><td>Opened or short-circuited</td></tr></table></td></tr>
<tr><td>Compressor
 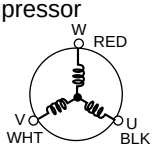
</td><td>Measure the resistance between terminals using a tester.
(Winding temperature : -10°C ~ 40°C)
<table><tr><th>Normal</th><th>abnormal</th></tr><tr><td>1Each phase 0.53Ω ~ 0.66Ω</td><td>Opened or short-circuited</td></tr></table></td></tr>
<tr><td>Outdoor fan motor
 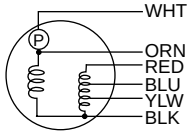

Protector specification
<table><tr><td>Short</td><td>95±15℃</td></tr><tr><td>Open</td><td>135±5℃</td></tr></table></td><td>Measure the resistance between lead wires using a tester.
(Part temperature : -10°C ~ 40°C)
<table><tr><th colspan="2">Normal</th><th>abnormal</th></tr><tr><td>WHT - BLK</td><td>69.0Ω ~ 86.0Ω</td><td rowspan="4">Opened or short-circuited (Not including WHT - ORN)</td></tr><tr><td>BLK - YLW</td><td>23.0Ω ~ 30.0Ω</td></tr><tr><td>YLW - BLU</td><td>10.0Ω ~ 13.0Ω</td></tr><tr><td>RED - BLK</td><td>73.0Ω ~ 91.0Ω</td></tr></table></td></tr>
<tr><td>R. V. coil</td><td>Measure the resistance using a tester. (Part temperature -10°C ~ 40°C)
<table><tr><th>Normal</th><th>abnormal</th></tr><tr><td>1640Ω ~ 2310Ω</td><td>Opened or short-circuited</td></tr></table></td></tr>
<tr><td>Linear expansion valve
 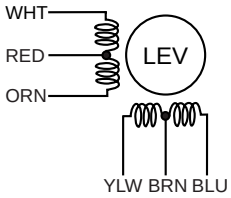
</td><td>Measure the resistance using a tester.(Part temperature -10°C ~ 40°C)
<table><tr><th>Lead wire color</th><th>Normal</th><th>Abnormal</th></tr><tr><td>WHT - RED</td><td rowspan="4">43Ω ~ 52Ω</td><td rowspan="4">Opened or short-circuited</td></tr><tr><td>RED - ORN</td></tr><tr><td>YLW - BRN</td></tr><tr><td>BRN - BLU</td></tr></table></td></tr>
<tr><td>High pressure switch (HPS)</td><td>Measure the resistance using a tester.
(Part temperature -10°C ~ 40°C)
<table><tr><th colspan="2">Pressure</th><th>Normal</th><th>abnormal</th></tr><tr><td colspan="2">Operation OFF</td><td rowspan="3">Short</td><td rowspan="4">Other than those listed at left</td></tr><tr><td>HPS1</td><td>2.35 ± 0.15MPa (24 ± 1.5kg / cm^2)</td></tr><tr><td>HPS2</td><td>2.55 ± 0.2MPa (26 ± 2kg / cm^2)</td></tr><tr><td>HPS1</td><td>$2.75^{+0.05}_{-0.1}$MPa ($28^{+0.5}_{-1.0}$kg / cm^2)</td><td rowspan="2">Open</td></tr><tr><td>HPS2</td><td>$3.43^{+0}_{-0.15}$MPa ($35^{+0}_{-1.5}$kg / cm^2)</td></tr></table></td></tr>
</table>

Ⓟ Inner protector

Outdoor unit does not operate. (LED display: display OFF)

Ⓐ Check of power supply

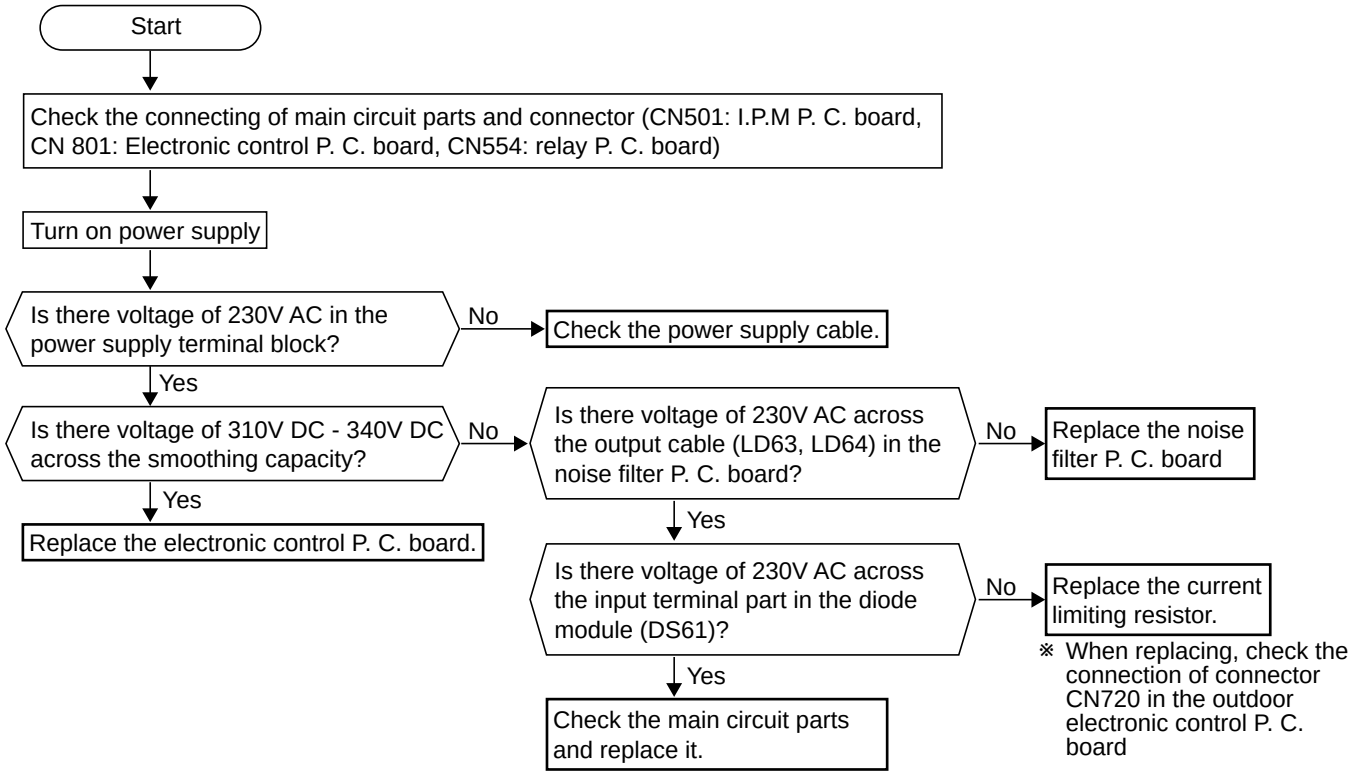

Outdoor unit does not operate. (LED display: 00)

Ⓑ Check of serial signal

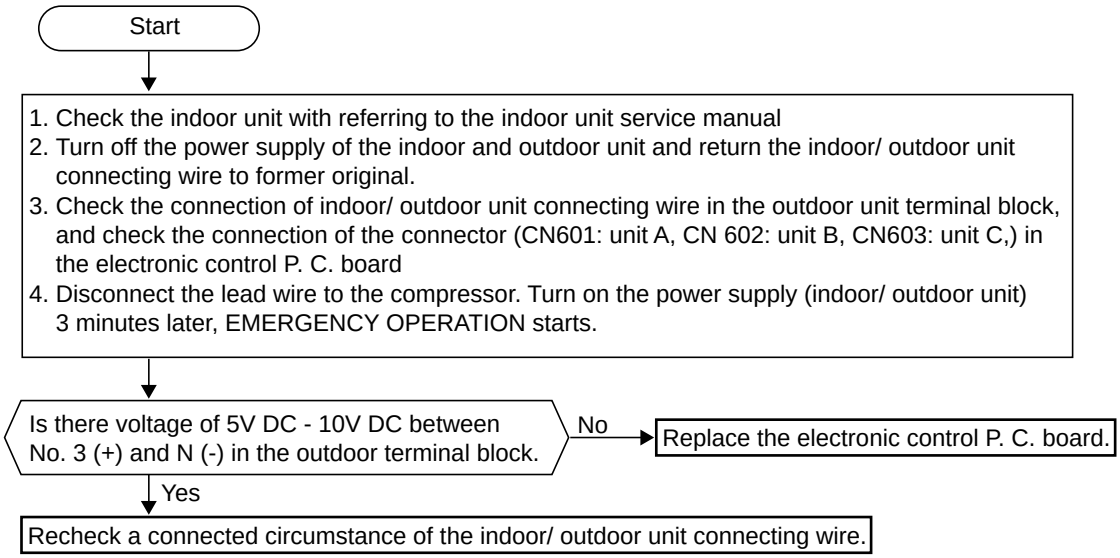

The cooling operation or heating operation does not operate. (LED display: 00)

© Check of R. V. coil

• When heating operation does not work.

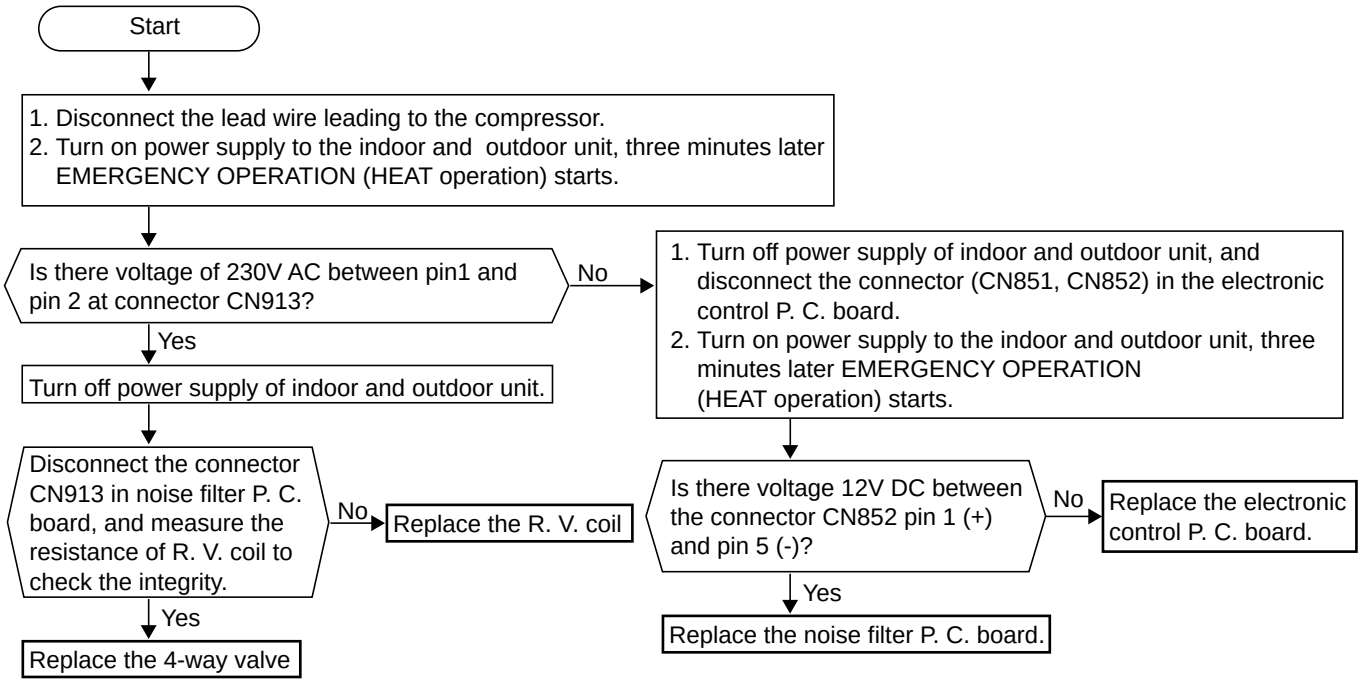

• When cooling operation does not work.

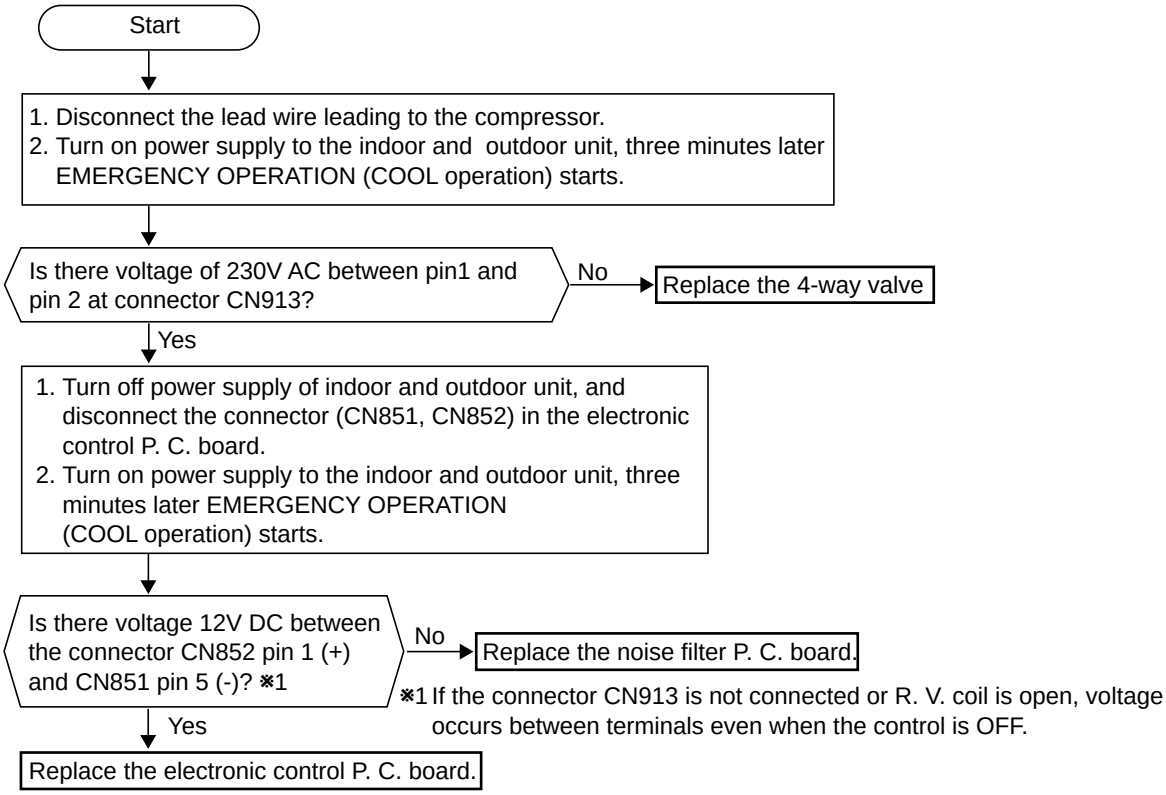

- **When cooling, heat exchanger of non-operating indoor unit frosts.**
- **When heating, non-operating indoor unit get warm.**

(LED display: 00, P1)

Ⓓ Check of LEV

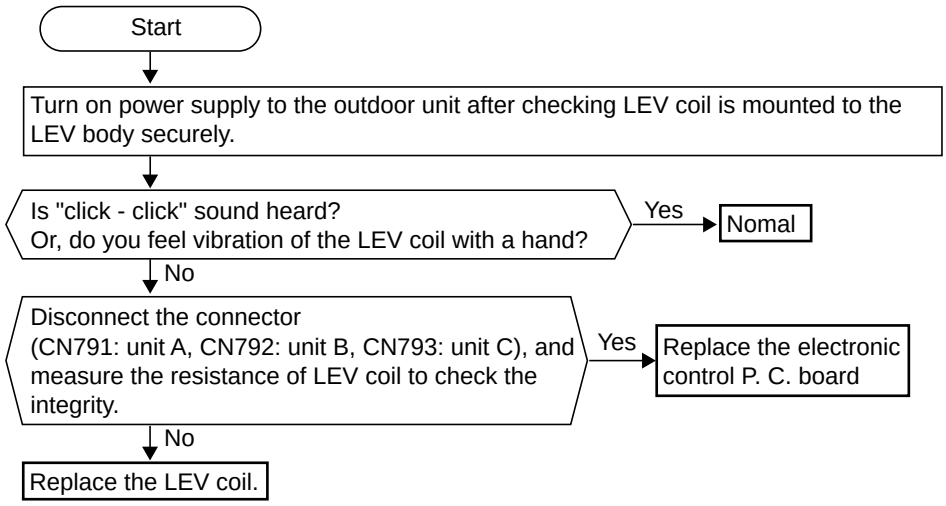

- **When heating, room does not get warm.**
- **When cooling, room does not get cool.**

(LED display: 00, A8)

Ⓔ Check of inverter/ compressor

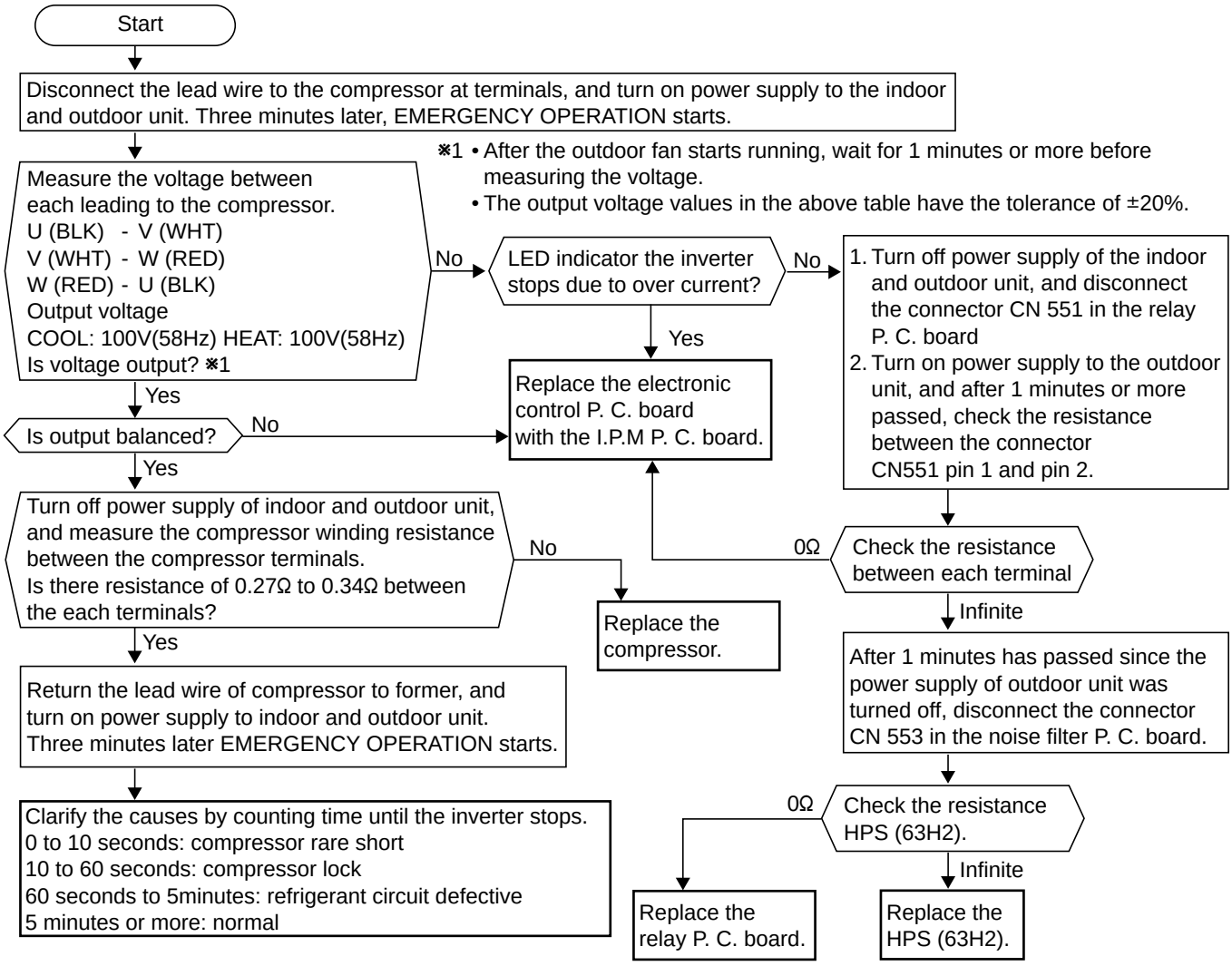

• **When thermistor is abnormal. (When the LED display is a table below.)**

Ⓕ Check of thermistor

LED	Thermistor	Symbol	Connector, Pin No.
E7	Defrost thermistor	RT62	Between CN661 pin1 and pin2
E6	Discharge temperature thermistor	RT61	Between CN661 pin3 and pin4
E9	Evaporation temperature thermistor	RT63	Between CN661 pin5 and pin6
F5	Gas pipe temperature thermistor (Unit A)	RT66	Between CN662 pin1 and pin2
F6	Gas pipe temperature thermistor (Unit B)	RT67	Between CN662 pin3 and pin4
F7	Gas pipe temperature thermistor (Unit C)	RT68	Between CN662 pin5 and pin6
d4	Fin temperature thermistor	RT65	Between CN663 pin1 and pin2

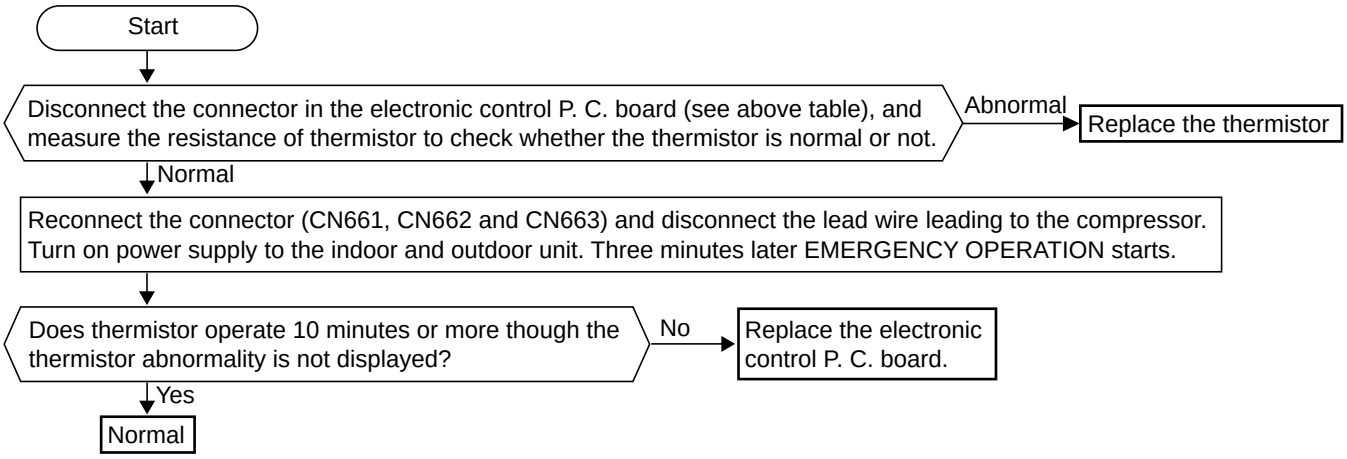

• **Fan motor does not operate. Or, fan motor stops at once' after fan motor operates.**

Ⓖ Check of fan motor

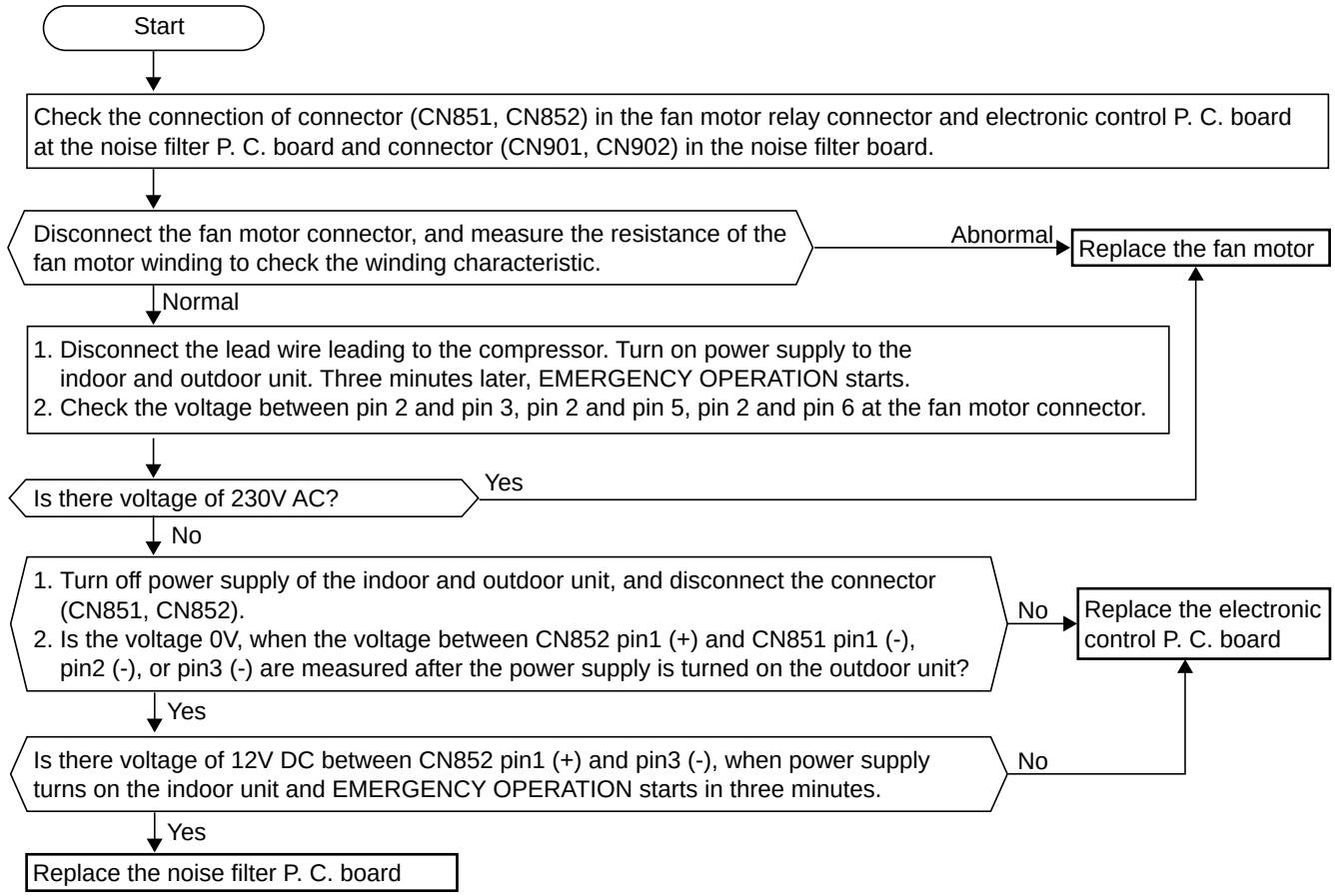

• **When the operation frequency does not go up from lowest frequency.**

Ⓗ Check of HPS

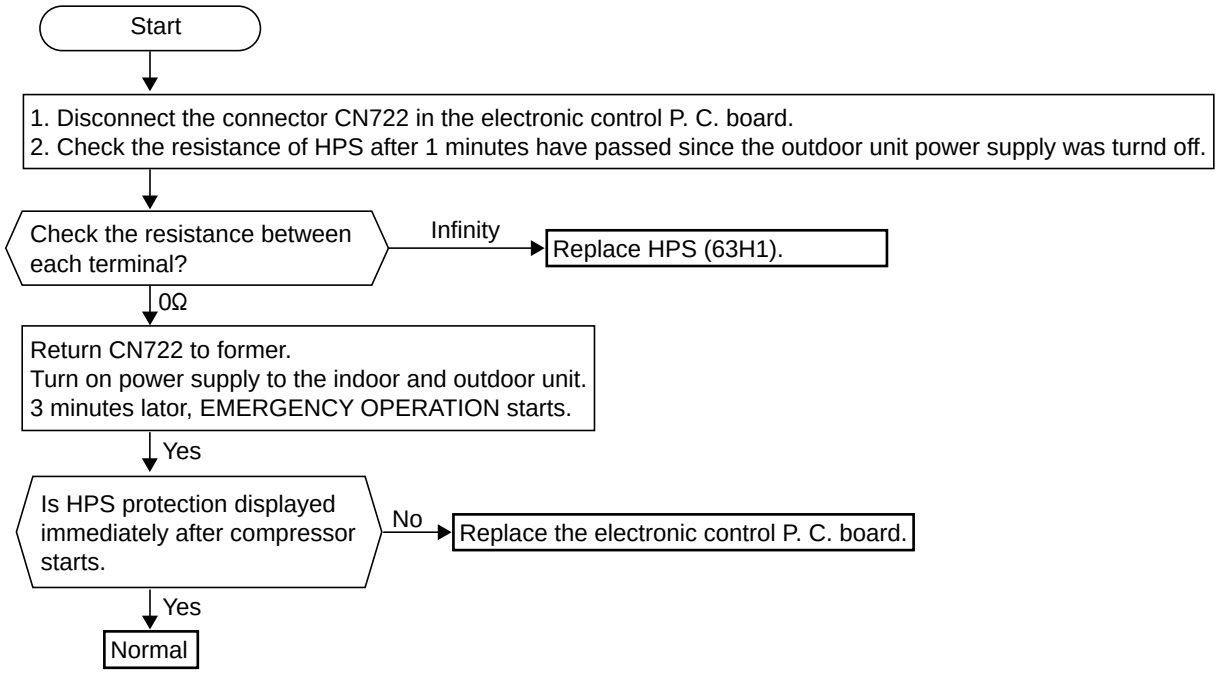

Ⓘ The other cases

① In the case that the indoor fan and outdoor fan operate but the compressor does not operate, it causes that the high pressure switch can be operated once.
First of all, check the high pressure switch can be shorted, turn OFF the power and turn ON again 1 minute later.

② Indoor unit dose not operate. (difference modes)

- When you try to run two indoor unit simultaneously, one for cooling and the other for heating, the unit which transmits signal to the outdoor units earlier decides the operation mode. The other unit indicates as shown in the figure below.
- When the above situation occurs, set all the indoor units to the same mode, turn OFF the indoor units, and then turn them back ON.
- Though the top of the indoor unit sometimes gets warm, this does not mean malfunction. The reason is that the refrigerant gas continuously flows into the indoor unit even while it is not operating.

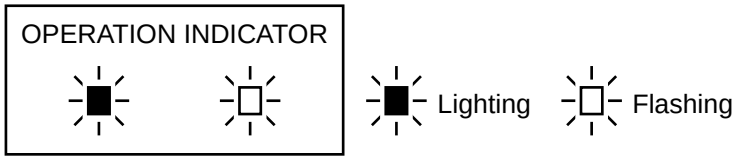

TEST POINT DIAGRAM AND VOLTAGE

MXZ-24UV -E1 , MXZ-24UV -E2

Electronic control P.C.board

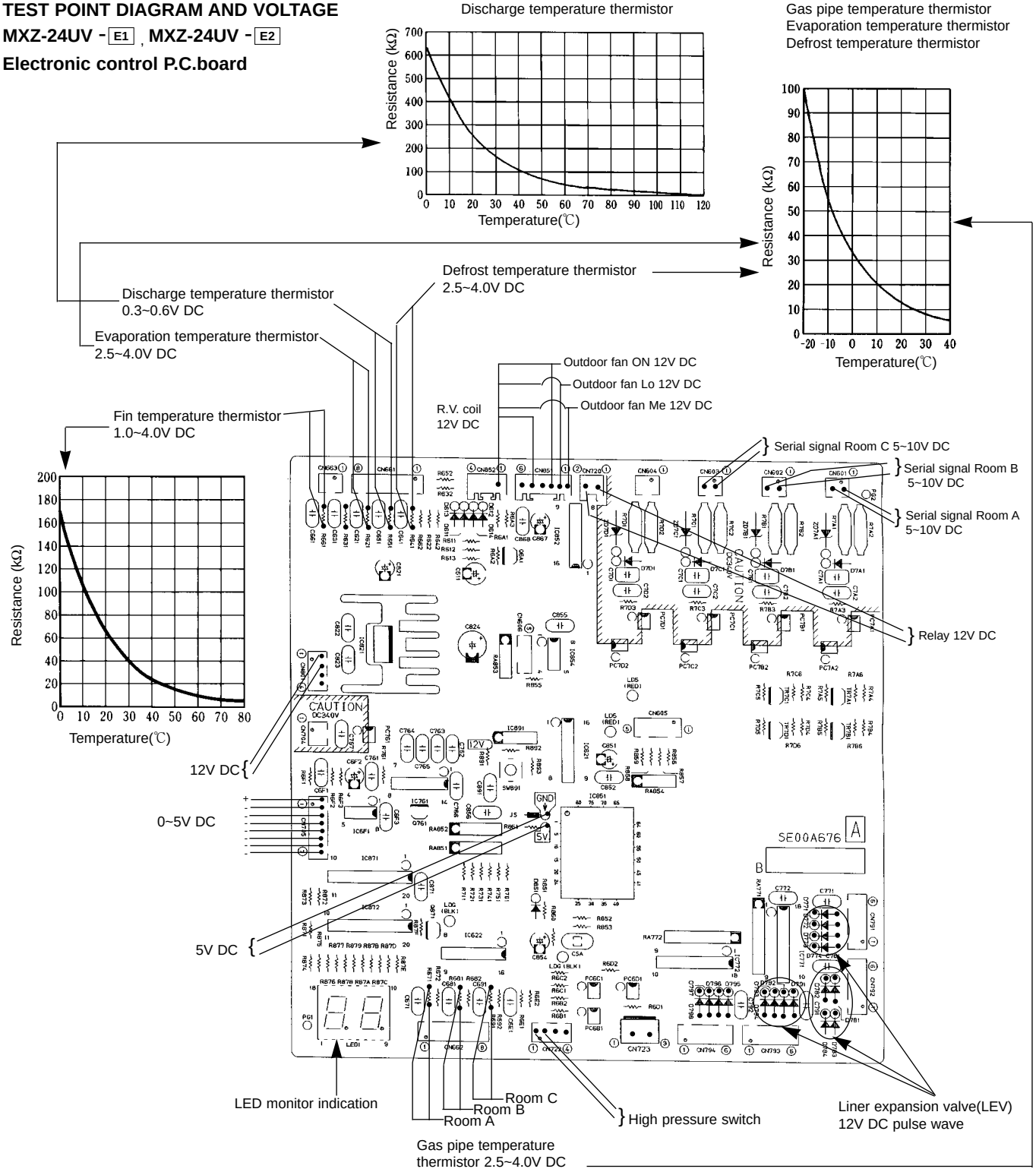

Noise filter P.C.board
MXZ-24UV - E1

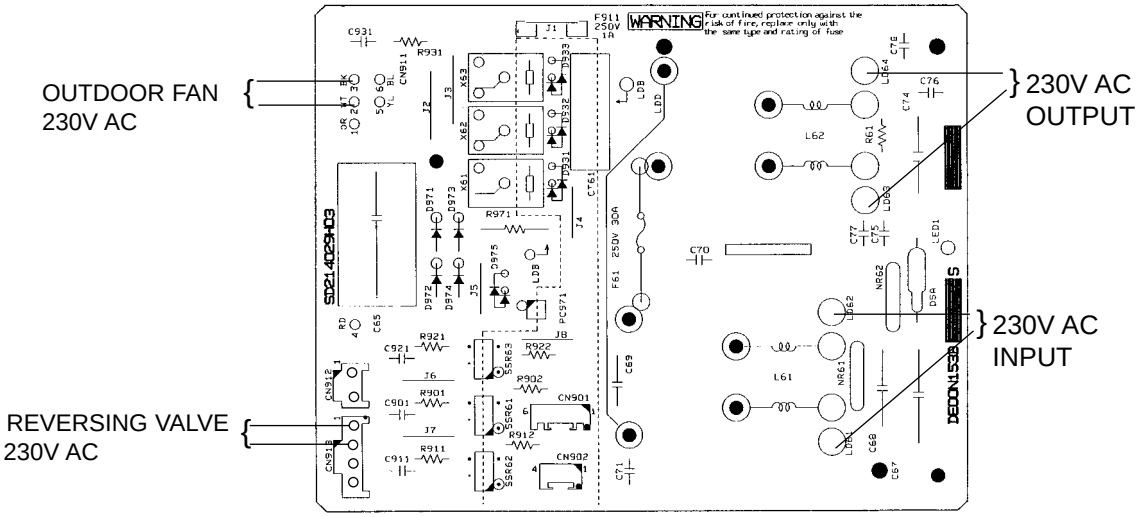

MXZ-24UV - E2

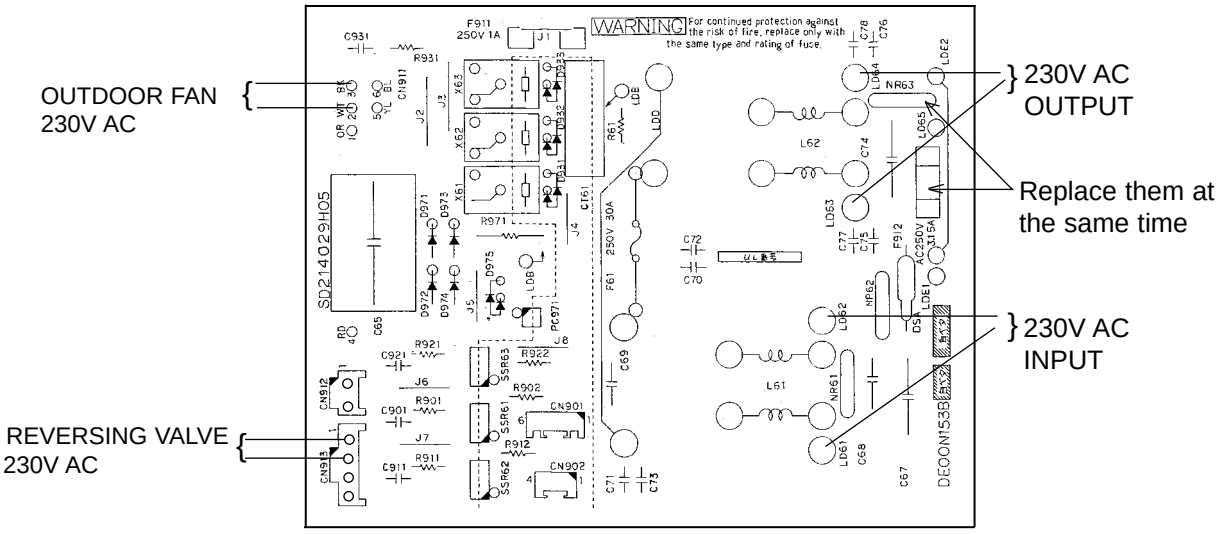

I.P.M P.C.board

MXZ-24UV - E1

MXZ-24UV - E2

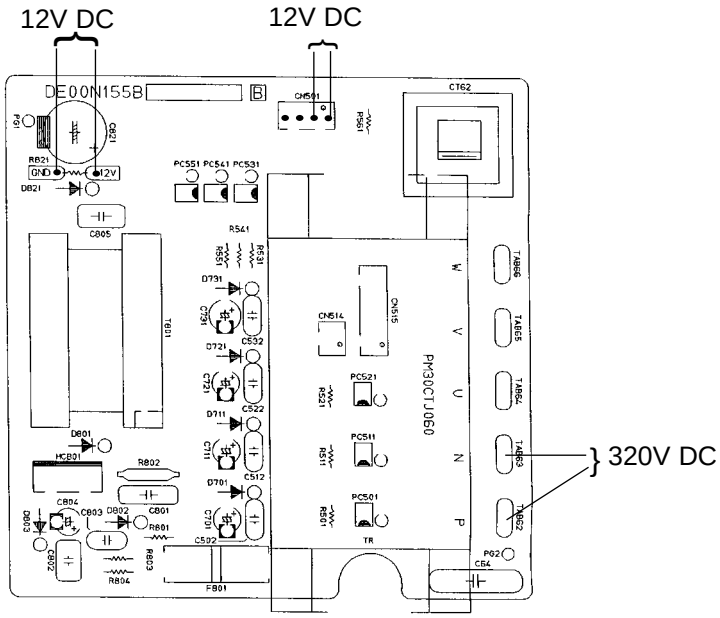

Relay P.C.board

MXZ-24UV - E1

MXZ-24UV - E2

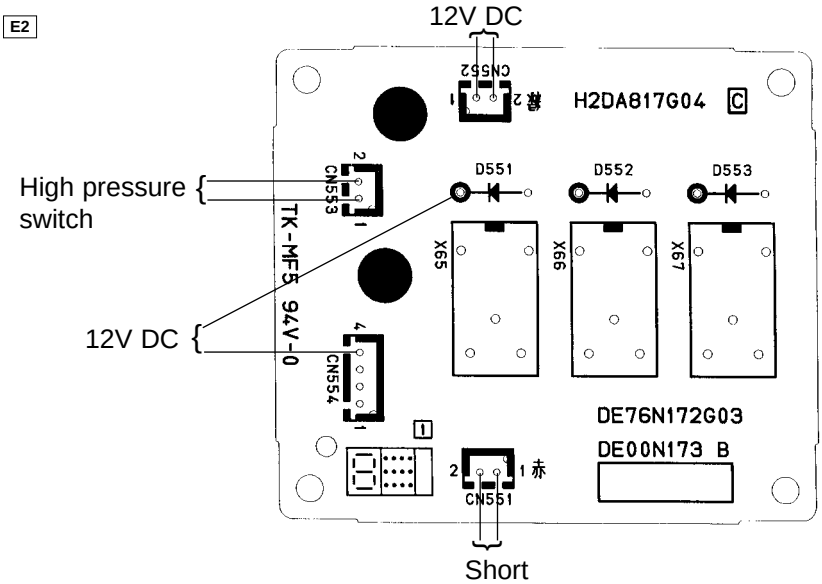

13 DISASSEMBLY INSTRUCTIONS

MXZ-24UV -E1 , MXZ-24UV -E2
OUTDOOR UNIT

OPERATING PROCEDURE	PHOTOS
1.Removing the compressor (1)Remove the screws of the service panel, and remove it. Recover refrigerant gas. (2)Remove the screws of the top panel , and remove it. (3)Remove the screws of the front panel , and remove it. (4)Disconnect the compressor lead wire.(TAB64,TAB65,TAB66) (5)Disconnect the outdoor electronic control P.C. board connectors CN791, CN792, CN793, CN794, CN662, CN722, and CN661.Disconnect the noise filter P.C. board connectors CN913. (6)Remove the four screws of the electrical parts , and remove them. (7)Remove the propeller. (8)Remove the screws of the separator, and remove it. (9)Recover gas from the refrigerant circuit. (10)Detach the brazed joints of the compressor suction and discharge pipes.(See Photo 3.) (11)Remove the three compressor nuts and remove the compressor.	**Photo 1** 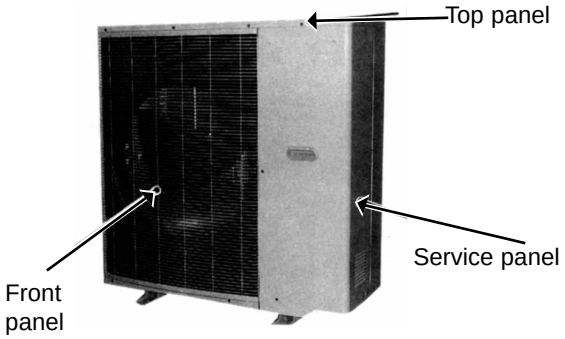 **Photo 2** 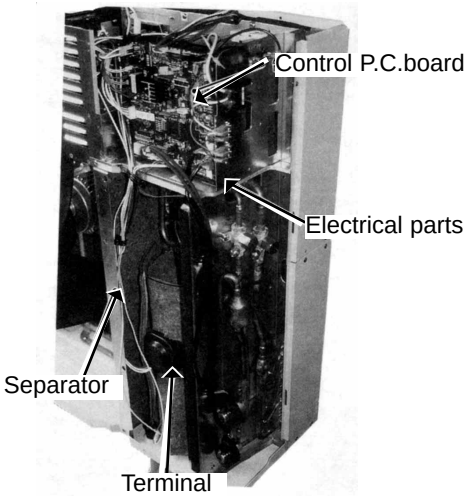 **Photo 3** 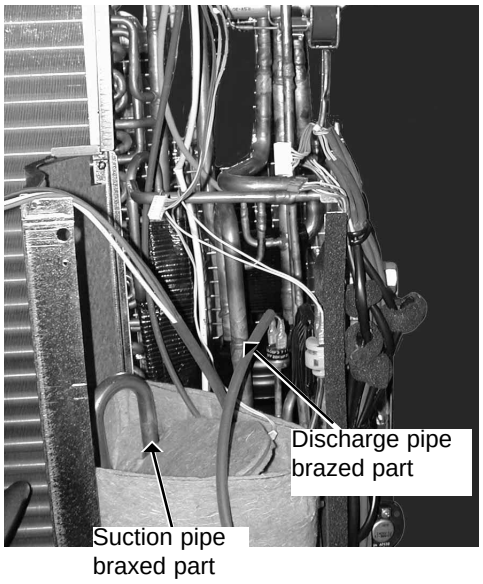

OPERATING PROCEDURE	PHOTOS
2.Removing the fan motor (1)Remove the top panel(five screws),the service panel(four screws),and the front panel (two screws).(See Photo 1.) (2)Disconnect the connector CN911 on the outdoor controller board. (3)Remove the propeller. (4)Remove the fan motor.	
3.Removing the 4-way valve (1)Remove the screws of the top panel , and remove it.(See Photo 1.) (2)Remove the service panel,rear panel,and connect cover panel. Recover refrigerant gas. (3)Remove the electrical parts.(See Photo 2.) (4)Detach the brazed joint of 4-way valve and pipe. (See Photo 4.)	**Photo 4** 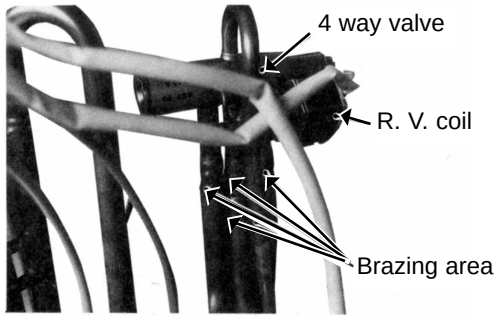
4.Removing the linear expansion valve (1)Remove the service panel.(See Photo 1.) (Gas release is not required if the unit is pumped down.) (2)Remove the coil of linear expansion valve. (3)Detach the brazed joint of linear expansion valve and pipe.	**Photo 5** 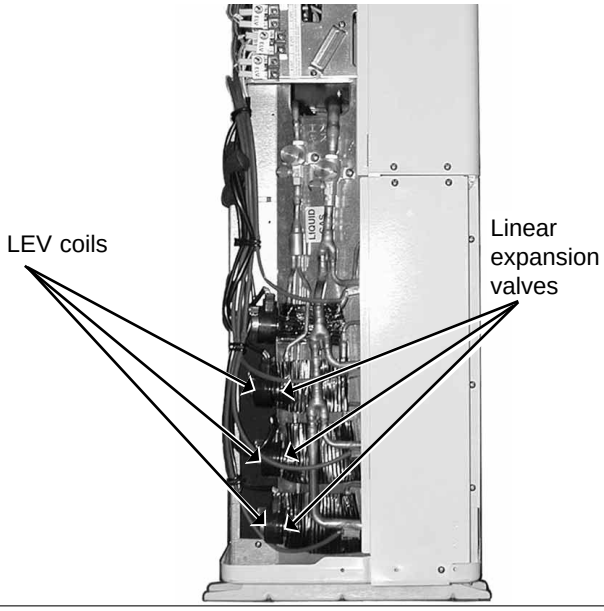

OPERATING PROCEDURE	PHOTOS
5.Removing the reactor (1)Remove the five screws of the top panel , and remove it.(See Photo 1.) (2)Disconnect the reactor lead wire. (3)Remove the two screws of the reactor , and take it out.	**Photo 6** 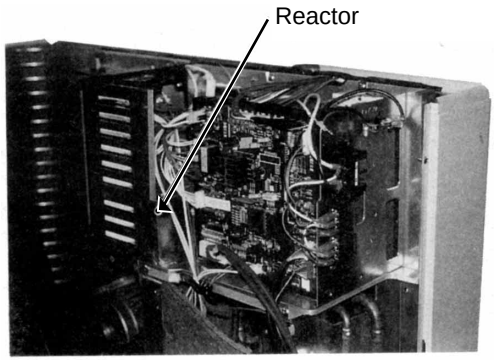

14 PARTS LIST

14-1. OUTDOOR UNIT FUNCTIONAL PARTS

MXZ-24UV -E1
MXZ-24UV -E2

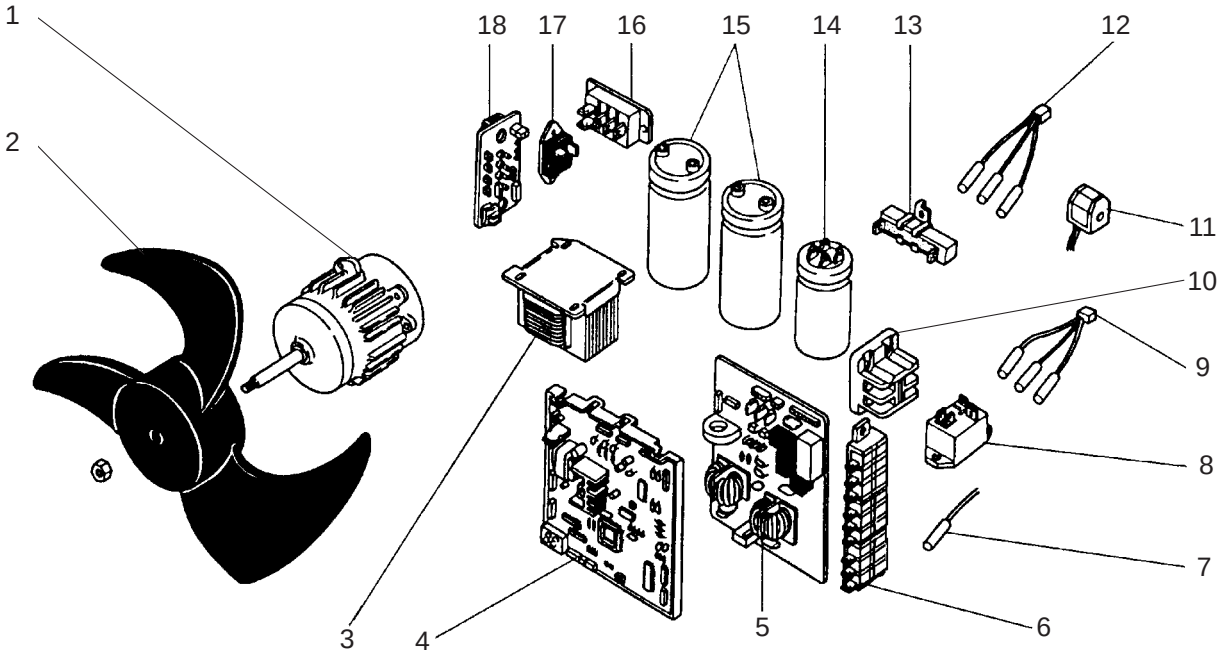

Part numbers that are circled are not shown in the illustration.

No.	Parts No.	Parts Name	Symbol in Wiring Diagram	Q'ty / unit		Remarks
				MXZ-24UV-E1	MXZ-24UV-E2	
1	T2W E40 301	OUTDOOR FAN MOTOR	MF61	1	1	RA6V60 - □□
2	M21 17A 501	PROPELLER FAN		1	1	
3	M21 17E 337	REACTOR	L	1	1	
4	T2W E89 451	ELECTRONIC CONTROL P.C. BOARD		1	1	
5	T2W E79 424	NOISE FILTER P.C. BOARD		1		
	T2W G01 424	NOISE FILTER P.C. BOARD			1	
6	T2W E58 376	TERMINAL BLOCK	TB2, 3, 4	3	3	
7	T2W E70 308	FIN TEMPERATURE THERMISTOR	RT65	1	1	
8	M21 42A 340	RELAY	X64	1	1	
9	M21 42A 308	THERMISTOR SET	RT61, 62, 63	1	1	EVAPORATION DISCHARGE, DEFROST
10	T2W E65 375	TERMINAL BLOCK	TB1	1	1	
11	T2W E70 398	R. V. COIL	21S4	1	1	
12	T2W E88 307	GAS PIPE TEMPERATUR THERMISTOR	RT66,67,68	1	1	A,B,C
13	M21 17A 362	RESISTOR	R	1		10Ω
	T2W G01 362	RESISTOR	R		1	20Ω
14	T2W E40 357	POWER FACTOR CAPACITOR	C61	1	1	220μF 400V
15	T2W E40 356	SMOOTHING CAPACITOR	C62,C63	2	2	2500μF 400V
16	M21 17A 443	DIODE MODULE	DS61	1	1	
17	M21 17A 447	DIODE STACK	DS62	1	1	
18	T2W E40 452	I.P.M P.C. BOARD		1	1	
19	T2W E40 441	RELAY P.C. BOARD		1	1	
20	T2W E66 382	FUSE	F801,F911	2	2	
21	T2W E89 313	FUSE&VARISTOR	F912,NR63		1	3.15A

14-2. OUTDOOR UNIT STRUCTURAL PARTS

MXZ-24UV -E1
MXZ-24UV -E2

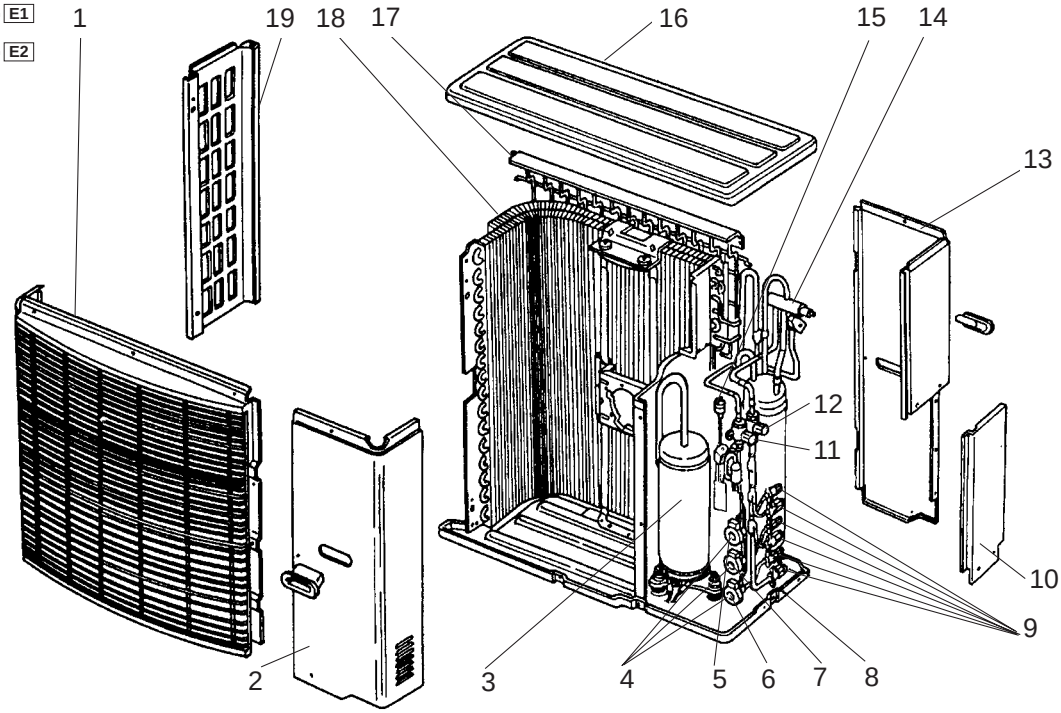

Part numbers that are circled are not shown in the illustration.

No.	Parts No.	Parts Name	Symbol in Wiring Diagram	Q'ty / unit MXZ-24UV- E1 MXZ-24UV- E2	Remarks
1	M21 AS2 232	FRONT PANLE		1	
2	M21 17A 245	SERVICE PANEL		1	
3	T92 500 800	COMPRESSOR	MC	1	THV247FBA
4	M21 90V 646	EXPANSION VALVE		3	
5	T2W E70 653	EXPANSION VALVE COIL	LEV C	1	C room
	T2W E95 653	LEV COIL		1	
	T2W E95 655	EXPANSION VALVE		1	
6	T2W E70 651	EXPANSION VALVE COIL	LEV A	1	A room
	T2W E95 651	LEV COIL		1	
	T2W E95 655	EXPANSION VALVE		1	
7	T2W E70 652	EXPANSION VALVE COIL	LEV B	1	B room
	T2W E95 652	LEV COIL		1	
	T2W E95 655	EXPANSION VALVE		1	
8	T2W E79 290	BASE ASSEMBLY		1	1/2,3/8,1/4 SET
9	M21 42E 644	UNION		1	
10	T2W E40 247	PIPE COVER		1	
11	M21 AN8 667	BALL VALVE 3/8		1	
12	M21 HG1 667	BALL VALVE 5/8		1	
13	T2W E70 248	REAR PANEL		1	
14	M21 48A 961	4-WAY VALVE		1	
15	T2W E79 646	HIGH PRESSURE SWICH	63H1	1	2.75MPa(28kg/cm^2)
16	M21 17A 297	TOP PANEL		1	
17	T2W E40 523	REAR GUARD		1	
18	M21 42E 630	HEAT EXCHANGER		1	
19	M21 17A 249	SIDE PANEL		1	
20	T2W E40 646	HIGH PRESSURE SWICH	63H2	1	3.43MPa(35kg/cm^2)
21	M21 986 936	CAPILLARY TUBE		3	ϕ4.0×ϕ2.4×400
22	M21 LV0 936	CAPILLARY TUBE SET		3	ϕ3.0×ϕ2.0×200 4PCS/SET
23	T2W E59 936	CAPILLARY TUBE		1	ϕ2.5×ϕ0.6×1000
24	T2W E70 936	CAPILLARY TUBE		1	ϕ2.5×ϕ0.6×750

When servicing , cut the tube to the proper length as shown in the REFRIGERANT SYSTEM DIAGRAM.
See page 11.

14-3. ACCESSORY PARTS

MXZ-24UV -E1
MXZ-24UV -E2

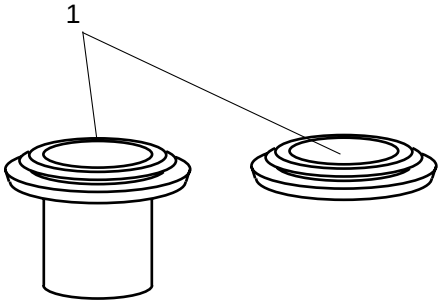

No.	Parts No.	Parts Name	Symbol in Wiring Diagram	Q'ty / unit MXZ-24UV - E1 MXZ-24UV - E2	Remarks
1	T2W E59 704	DRAIN SOCKET ASSEMBLY		1	DRAIN SOCKET ×1 DRAIN CAP ×2

15 OPTIONAL PARTS

15-1. Different-diameter pipe

MXZ-24UV	Model name	Connected pipes diameter (mm)
For different-diameter pipes	MAC-454JP	ϕ9.52 — ϕ12.7 (3/8) (1/2)
	MAC-455JP	ϕ12.7 — ϕ9.52 (1/2) (3/8)
	MAC-456JP	ϕ12.7 — ϕ15.88 (1/2) (5/8)

15-2. Outlet guide

Changes air discharge direction.

Applied unit	Model name	Model code
MXZ-24UV	MAC-855SG	51H-855

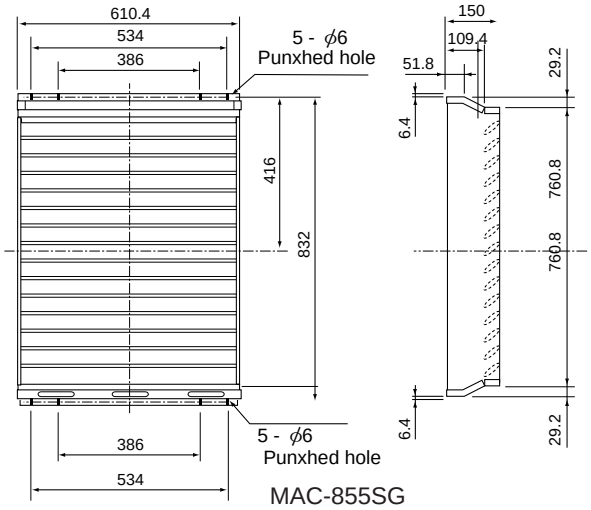

MAC-855SG

MITSUBISHI ELECTRIC CORPORATION

HEAD OFFICE: MITSUBISHI DENKI BLDG., 2-2-3, MARUNOUCHI, CHIYODA-KU, TOKYO100-8310, JAPAN

Distributed in Jan. 2003. No.OB287 REVISED EDITION-A 7
Distributed in Oct. 2001. No.OB287 248
Made in Japan

New publication, effective Jan. 2003
Specifications subject to change without notice.