PSoC Based Blood Pressure Monitor

By

Escares, Jonas T.
Garcia, Arben M.
Geronimo, Edzel P.
Regala, Jerby C.

A Design Report Submitted to the School of Electrical Engineering, Electronics and Communications Engineering, and Computer Engineering in Partial Fulfillment of the Requirements for the Degree

Bachelor of Science in Computer Engineering

Mapua Institute of Technology
April 2009

Approval Sheet

Mapua Institute of Technology
School of EE-ECE-CoE

This is to certify that we have supervised the preparation of and read the design report prepared by **Jonas T. Escares, Arben M. Garcia, Edzel P. Geronimo,** and **Jerby C. Regala** entitled **PSoC Based Blood Pressure Monitor** and that the said report has been submitted for final examination by the Oral Examination Committee.

Prof. Filomena J. Berenguela
Reader

Engr. Cyrel C. Ontimare
Design Adviser

As members of the Oral Examination Committee, we certify that we have examined this design report, presented before the committee on **November 21, 2008,** and hereby recommended that it be accepted as fulfillment of the design requirement for the degree in **Bachelor of Science in Computer Engineering**.

Engr. Jose B. Lazaro Jr.
Panel Member

Engr. Isagani V. Villamor
Panel Member

Engr. Jocelyn F. Villaverde
Chairman

This design report is hereby approved and accepted by the School of Electrical Engineering, Electronics and Communications Engineering, and Computer Engineering as fulfillment of the design requirement for the degree in **COE461D**.

Felicito S Caluyo

Dr. Felicito S. Caluyo
Dean, School of EE-ECE-CoE

ACKNOWLEDGMENT

The group would like to acknowledge and extend their deepest gratitude to the following who have contributed to the development of the project.

First and foremost, our Heavenly Father, for giving them the knowledge, wisdom, and strength to finish the design and other requirements on time;

Engr. Noel B. Linsangan, for allowing them to pursue this study, and giving advice, guidance, and consideration to assure the success of the project design;

Engr. Cyrel C. Ontimare, for sharing her expertise and experience which gave them the confidence and inspiration; and also for spending her time in meetings and consultations which the team needed;

Prof. Filomena J. Berenguela, for guiding them in constructing their paragraphs and checking the grammar of their documents;

And lastly, to their respective parents/guardians' support throughout the development of the design.

TABLE OF CONTENTS

TITLE PAGE		i
APPROVAL SHEET		ii
ACKNOWLEDGEMENT		iii
TABLE OF CONTENTS		iv
LIST OF TABLES		vi
LIST OF FIGURES		vii
ABSTRACT		viii
Chapter 1:	DESIGN BACKGROUND AND INTRODUCTION	1
	Introduction	1
	The Design Setting	3
	Statement of the Problem	4
	The Objective of the Design	5
	The Significance of the Study	5
	Conceptual Framework	6
	The Scope and Delimitation	7
	Definition of Terms	9
Chapter 2:	REVIEW OF RELATED LITERATURE AND RELATED STUDIES	14
Chapter 3:	DESIGN METHODOLOGY AND PROCEDURES	22
	Design Methodology	22
	Design Procedure	22
	Design Procedure for Actual Design	24
	Hardware Design	25
	List of Materials	28
	Hardware Component	29
	Circuit Design	30
	Hardware Implementation	31
	Software Design	31
	Software Component	31
	System Flowchart	32
	Prototype Development	35

Chapter 4: TESTING, PRESENTATION, AND INTERPRETATION OF DATA 36

Testing of Accuracy 36
Testing of Reliability 44

Chapter 5: CONCLUSION AND RECOMMENDATION 47

Conclusion 47
Recommendation 47

BIBLIOGRAPHY 49

APPENDICES 50

Appendix A Circuit/Schematic Diagram 50
Appendix B Source Code 53
Appendix C Actual Photo 71
Appendix D 28Pin CY8C29466 Datasheet 74
Appendix E LM324 Datasheet 82
Appendix F MPS-2000 Pressure Sensor Datasheet 84
Appendix G L78XX Voltage Regulator Datasheet 87
Appendix H User's Manual 93

LIST OF TABLES

Table 3.1:	List of Materials and Cost	28
Table 4.1:	Classifications of Blood Pressure for Adults	38
Table 4.2:	Test Results of Test Subject A	39
Table 4.3:	Test Results of Test Subject B	39
Table 4.4:	Test Results of Test Subject C	41
Table 4.5:	Test Results of Test Subject D	42
Table 4.6:	Computed Average of Test Results	43
Table 4.7:	Computed Percentage Errors for Accuracy	44
Table 4.8:	Test Results for Reliability Testing	45
Table 4.9:	Computed Percentage Errors for Reliability	46

LIST OF FIGURES

Figure 1.1:	Conceptual Framework of the System	6
Figure 2.1:	Indirect Blood Pressure Measurements	15
Figure 2.2:	Hardware Block Diagram of SE-1000	18
Figure 3.1:	Design Procedure Flowchart	23
Figure 3.2:	Block Diagram of Hardware Design	27
Figure 3.3:	Schematic Diagram of the Design	30
Figure 3.4:	System Flowchart of the Design Prototype	34
Figure 3.5:	Actual Photo of the Prototype	35
Figure 6.1:	Schematic Diagram of the Design Prototype	51
Figure 6.2:	PCB Layout with Components of the Design	52
Figure 6.3:	PCB Layout of the Design	52
Figure 6.4:	Internal View of the Prototype	72
Figure 6.5:	Top View of the Prototype	72
Figure 6.6:	Front View of the Prototype	73
Figure 6.7:	Back View of the Prototype	73

ABSTRACT

The design study is all about PSoC based Blood Pressure Monitor. It is developed using a Programmable System on Chip which is being manufactured by Cypress Semiconductor Corporation. The systolic, diastolic and the pulse rate reading are displayed on a Liquid Crystal Display or LCD making it digital. The date and time is present in the display. It can also store the readings with the date and time information included. Also, this prototype has a battery rechargeable function. The purpose of the design is to create a low cost design and to enhance the functionality of the blood pressure meter in the market using the PSoC microcontroller. The design is conducted by gathering related literature and studies which was used in determining the features that is needed in the design. It is followed by creating the circuit diagram, studying the program to be used and developing the design with all the gathered components. After developing the design and did actual testing, the group can say that the accuracy of the design is almost the same with the existing blood pressure monitor in the market. The functionality of the design and all of its features are properly working.

Keywords: Programmable System on Chip, systolic, diastolic, pulse rate, rechargeable

CHAPTER 1

DESIGN BACKGROUND AND INTRODUCTION

Introduction

Hypertension, or commonly referred to as high blood pressure, is one of the most serious conditions our society is facing nowadays. It is dangerous in a sense that it can lead to coronary heart disease, heart failure, stroke, kidney failure, and other health problems. "Blood pressure" is the force of blood pushing against the walls of the arteries as the heart pumps out blood. When this pressure rises and stays high over time, it can damage the body in many ways.

There is a device that monitors the blood pressure condition of a person and that is the blood pressure meter. A blood pressure meter is a device used to measure blood pressure, comprising an inflatable cuff to restrict blood flow, and a mercury or mechanical manometer to measure the pressure. It is always used in conjunction with a means to determine at what pressure blood flow is just starting, and at what pressure it is unimpeded. The device was invented by Samuel Siegfried Karl Ritter von Basch. Scipione Riva-Rocci, an Italian physician, introduced a more easily used version in 1896. Harvey Cushing discovered this device in 1901 and popularized it. This device is also known as sphygmomanometer, which came from the Greek word *sphygmós* or pulse, plus the scientific term manometer which is a pressure meter.

A sphygmomanometer usually consists of an inflatable cuff, a measuring unit, a tube to connect the two, and an inflation bulb also connected by a tube to

the cuff which is commonly found in models that don't inflate automatically. The inflation bulb contains a one-way valve to prevent inadvertent leak of pressure while there is an adjustable screw valve for the operator to allow the pressure in the system to drop in a controlled manner. This device had been improved to different kind of models that include application of modern technology having microcontrollers in it.

Developing a digital blood pressure meter that does the same job as what the analog devices do will have numerous advantages. There are existing digital blood pressure meters but these are expensive because of the microcontrollers and components used in these devices. That is why innovating the existing blood pressure monitor that uses PSoC or the Programmable System on Chip will be very efficient in terms of its functionality, portability and cost effectiveness. It will read and display the pressure through the blood pressure cuff getting its systolic and diastolic pressure. Systolic blood pressure is the pressure when the heart beats while pumping blood. Diastolic blood pressure is the pressure when the heart is at rest between beats. The unit of measurement for blood pressure reading is millimeters of mercury (mmHg). The blood pressure readings can be classified according to the range of systolic and diastolic reading to determine if it is normal, hypotension or hypertension condition (see Table 4.1). The pulse rate reading can be measured and can be classified if the user has bradycardia, tachycardia or has normal pulse rate.

The Design Setting

Developing this PSoC based Blood Pressure Monitor will help avoid high blood pressure condition. It can be used in monitoring the blood pressure status of a person so that they are always aware of their heart condition even when they are at home, office, or anywhere since this design is portable. The design is also easy to use as compared to the usual blood pressure device because it is automatic, meaning there is no need to pump air manually and to be knowledgeable on how to use a stethoscope. By pushing the start button, the design will automatically pump air and display the result in systolic and diastolic reading as well as the pulse rate reading.

The user of the existing blood pressure meter in the market either analog or digital requires them to record the readings that they got so that there is still a record for future comparison of their blood pressure measurements. Doing this design study will make it easier for them to automatically record and view their blood pressure measurements.

In addition, current digital blood pressure meter in the market are quite expensive and uses only a battery to make them work. This design would enhance the usability and reliability of blood pressure meter by making it rechargeable.

Statement of the Problem

High blood pressure is a serious condition that tends to rise with age. A healthy lifestyle can prevent it but there is always a need to monitor our heart's condition. Having a personal blood pressure meter is a good way of monitoring blood pressure.

At present, people spend their money on cheaper products without considering the efficiency and functionality of the product. When it comes to blood pressure meter, an aneroid blood pressure meter is still being used and available at home because of its cheaper price compared to the digital blood pressure meter. This requires a medical knowledge and a stethoscope in using this device, and a companion who will assist you while getting the readings.

Although there is already an existing digital blood pressure meter in the market which is easier to use, the price is not affordable. The company who manufactures this device uses microcontrollers and other components that make it expensive. People who will buy this device will spend more money in maintaining its functionality and usability because it requires a battery to make it work.

Due to the problems that arise, our group needs to create a low cost digital blood pressure monitor that can reassure the user of its accuracy, efficiency and reliability.

The Objective of the Design

The main objective of this design is to create a low-cost digital blood pressure monitor prototype using Programmable System on Chip or PSoC microcontroller. The group considered the following to implement the design project:

1. To be able to store systolic reading, diastolic reading and pulse rate reading.
2. To be able to store the readings into four different memory modules that contain the date and time it was taken.
3. To be able to design a prototype that will work using either a battery supply or a direct power supply as its main power source.
4. To be able to incorporate rechargeability feature through the use of rechargeable battery supply.

The Significance of the Study

Having this design done will be very beneficial to people especially to those who suffer high blood pressure condition. This study promotes health awareness to people and that they can monitor their own blood pressure using this prototype. Using this would be simple and some features were enhanced making it valuable. This was created to minimize the expenses of the people who are using a battery operated blood pressure meter which costs much and not environment friendly. Through this study, the group was able to apply their

technical skills and knowledge learned not just in engineering but also their research in the field of health and science.

The Conceptual Framework

In order to build this design, the group shared and discussed different ideas and principles related to this study. Figure 1.1 shows the conceptualized design of the system. This conceptual framework illustrates the flow of which the device works starting from its input then how it will be processed until it produces an output.

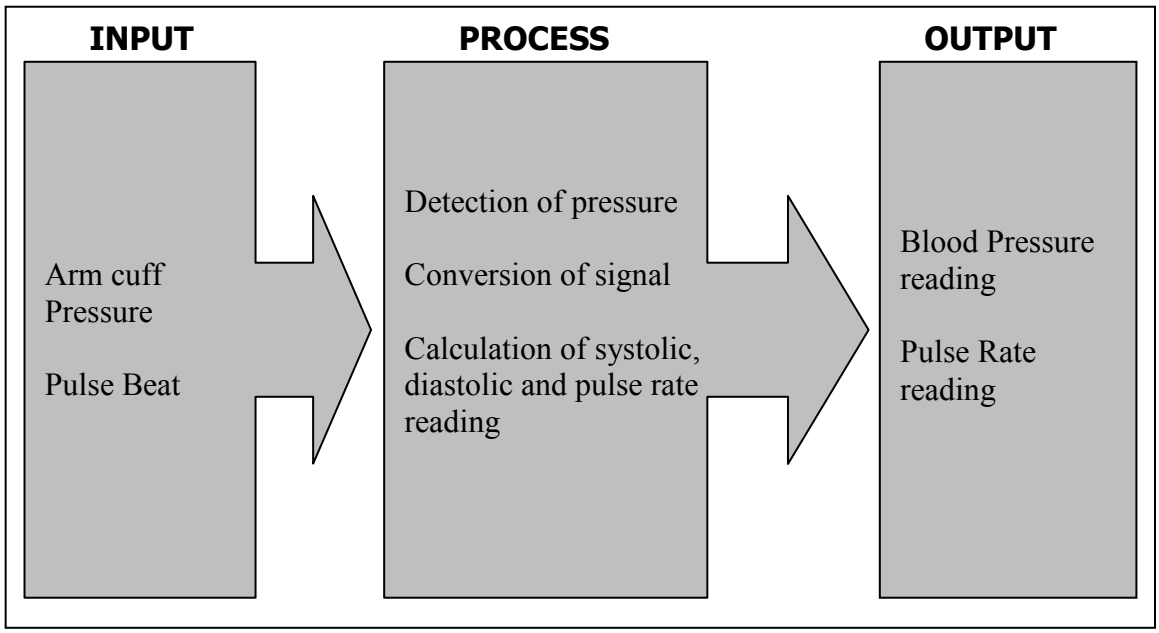

Figure 1.1 Conceptual Framework of the System

Using the conceptual framework Figure 1.1 above, the design shows that the arm cuff pressure and pulse beat are the input of the system. The pulse beat is an independent variable which comes from the user. The arm cuff is pressurized during inflation that will cause a series of pulse beat during deflation. A change in pressure is detected by the pressure sensor which generates a signal

that will pass to the operational amplifier. The process of converting the signal from analog to digital takes place in the microcontroller. The calculation of the systolic, diastolic and pulse rate is also processed in the PSoC microcontroller. The process will continue until deflation is finished. After the systolic, diastolic and pulse rate has been determined, it will be sent to the LCD to display the blood pressure reading and the pulse rate reading.

The Scope and Delimitations

The design will cover innovation and development of the Programmable System on Chip based Blood Pressure Monitor. The group has set the scope and delimitation of the design as follows:

The Scope:

1. The design uses a PSoC microcontroller as a substitute to the usual microcontroller used in the market.
2. The blood pressure monitor works automatically once started.
3. The blood pressure monitor can also determine and display the pulse rate reading.
4. It can record blood pressure reading and pulse rate reading including the date and time it was taken.
5. It can record 30 blood pressure readings on each memory modules.
6. It consists of 4 memory modules which are A, B, C and D.
7. An indicator SA that means save is displayed every after blood pressure reading.

8. An indicator EE that means error is displayed if the reading is out of range.
9. The prototype uses a rechargeable battery and a 6V-12V adaptor.
10. The prototype still works while charging.
11. The date and time can be set manually and updates automatically.
12. There is a light indicator when the prototype is charging.
13. There is a display indicator when the battery is drained or emptied.

Delimitations:

1. The battery should not be emptied so that the records in the memory will not be deleted.
2. The blood pressure monitor can only record up to a maximum of 120 readings.
3. The maximum range of the blood pressure reading is up to 190 mmHg.
4. The time setting in the device uses only 24 hour military time.
5. The arm cuff cannot be detached from the main device.

7. The prototype is unable to determine and display the hypertension classification of the reading.

8. The prototype has a preset of memory locations A, B, C, and D and cannot store names as indicator for each memory module.

9. There is no indicator when the battery is fully charged.

10. There is no display indicator of how much battery charge is remaining.

Definition of Terms

Adaptor is a device connecting electric appliances to a single socket. (Oxford, 2007).

Amplitude is the maximum value of a signal. (Alexander and Sadiku, 2003).

Artery is one of the tube-shaped blood vessels that carries blood away from the heart; these are thick-walled, flexible and muscular. (Brueschke, 1993).

Auscultation is the technical term for listening to the internal sounds of the body using a stethoscope. Auscultation is performed for the purposes of examining the circulatory system and respiratory system (heart sounds and breath sounds), as well as the gastrointestinal system (bowel sounds). (Brueschke, 1993).

Bradycardia occurs when the pulse rate is below 60 per minute. (Brueschke, 1993).

Battery is a device containing electrical cells or cells used as a source of power. (Oxford, 2007).

Brachial Artery is the major blood vessel of the upper arm. (Brueschke, 1993).

Blood Pressure is the pressure blood against the walls of the arteries. (Brueschke, 1993).

Blood Pressure Meter also called as sphygmomanometer; is a device used to measure blood pressure, comprising an inflatable cuff to restrict blood flow, and a mercury or mechanical manometer to measure the pressure. It is always used in conjunction with a means to determine at what pressure blood flow is just

starting, and at what pressure it is unimpeded. Manual sphygmomanometers are used in conjunction with a stethoscope. (Brueschke, 1993).

Blood Vessel is any tube in the body through which blood circulates. The most important vessels in the system are the capillaries, the microscopic vessels which enable the actual exchange of water and chemicals between the blood and the tissues, while the conduit vessels, arteries and veins, carry blood away from the heart and through the capillaries or back towards the heart, respectively. (Brueschke, 1993).

Capacitor is a passive element designed to store energy in its electric field, the most common electrical components. It is consisted of two conducting plates separated by an insulator (or dielectric). (Alexander and Sadiku, 2003).

Deflate means to let out air or gas from an inflatable object with the result that it shrinks or collapses, or lose air or gas. (Encarta, 2007).

Diastole is the normal period of relaxation of the heart muscles. The diastolic blood pressure is the point of least pressure in the arteries, because blood is not being pumped by the heart during this phase. (Brueschke, 1993).

Diode is a semiconductor device with a single pn junction that conducts current in only one direction. (Floyd, 2002).

Fuse is a protective device that burns open when the current exceeds a rated limit. (Floyd, 2002).

Hypertension is a condition in which a person's blood pressure is persistently above normal. (Brueschke, 1993).

Hypotension is a condition in which the blood pressure is reduced or below normal. (Brueschke, 1993).

Inflate means to fill something such as a ball, mattress, tire, or boat with air or gas to bring it to the proper size, shape, and firmness for use, or to become filled with air or gas. (Encarta, 2007).

Korotkoff Method is a non-invasive auscultatory technique for determining both systolic and diastolic blood pressure levels. The method requires a sphygmomanometer and a stethoscope. Due to ease and accuracy, it is considered a "gold standard" for blood pressure measurement. (Brueschke, 1993).

Korotkoff Sounds are the sounds that medical personnel listen for when they are taking blood pressure using non-invasive measurement. (Brueschke, 1993).

LED (Light Emitting Diode) is a type of diode that emits light when there is forward current. (Floyd, 2002).

Manometer could also be referring to a pressure measuring instrument, usually limited to measuring pressures near to atmospheric. The term manometer is often used to refer specifically to liquid column hydrostatic instruments. (Encarta, 2007).

Microcontroller consists of an integrated CPU, memory (a small amount of RAM, program memory, or both) and peripherals capable of input and output. A microcontroller (also MCU) is a functional computer system-on-a-chip. (Ashby, 2005).

Normal Pulse Rate for a healthy adult, while resting, can range from 60 to 100 beats per minute (BPM), although well-conditioned athletes may have a healthy pulse rate lower than 60 BPM. During sleep, the pulse can drop to as low as 40 BPM; during strenuous exercise, it can rise as high as 150–200 BPM. Generally, pulse rates are higher in infants and young children. The resting heart rate for an infant is usually close to an adult's pulse rate during strenuous exercise (average 110 BPM for an infant). (Brueschke, 1993).

Occlusion is an obstruction or a closure of a passageway or vessel. (Brueschke, 1993).

Operational Amplifier which is often called an op-amp is a DC-coupled high-gain electronic voltage amplifier with differential inputs and, usually, a single output. (Floyd, 2002).

Pressure is an expression of the force required to stop a fluid from expanding, and is usually stated in terms of force per unit area. (Encarta, 2007).

Pressure Sensor generates a signal related to the pressure imposed. Typically, such a signal is electrical, but optical, visual, and auditory signals are not uncommon. (Encarta, 2007).

PSoC (Programmable System on Chip) is a device, configurable mixed signal arrays that integrate the microcontroller and related peripheral circuits typically found in an embedded design. (Ashby, 2005).

Pulse is the rhythmical expansion and contraction of an artery that can be felt near the surface of the body. It can be palpated in any place that allows for an

artery to be compressed against a bone, such as at the neck (carotid artery), at the wrist (radial artery), behind the knee (popliteal artery), on the inside of the elbow (brachial artery), and near the ankle joint (posterior tibial artery). The pulse rate can also be measured by measuring the heart beats directly (the apical pulse). (Brueschke, 1993).

Relay is essentially an electromagnetic device used to open or close a switch that controls another circuit. (Alexander and Sadiku, 2003).

Resistor is the simplest passive element. It is a device that has the ability to resist the flow of electric current that is measured in ohms. It is usually made from metallic alloys and carbon compounds. (Alexander and Sadiku, 2003).

Solenoid Valve is an electromechanical valve used for liquid or gas controlled by running or stopping an electric current through the solenoid, which is a coil of wire, thus changing the state of the valve. (Encarta, 2007).

Stethoscope is an instrument for listening to the internal sounds of the body. (Brueschke, 1993).

Systole is the contraction of the heart muscle that causes the forceful ejection of blood into the arterial system. (Brueschke, 1993).

Tachycardia occurs when the pulse rate is above 100 BPM. (Brueschke, 1993).

Transistor is a semiconductor device commonly used for amplification or switching appliances. (Floyd, 2002).

Voltage Regulator is an electrical device that maintains an essentially constant output voltage for a range of input voltage or load values. (Floyd, 2002).

Chapter 2

REVIEW OF RELATED LITERATURE AND RELATED STUDIES

The concept of doing the system of the design was brought up through the ideas of the existing studies and principles from related literatures while conducting the research.

According to the concepts from the book Blood Pressure Measurements by Shyam Rithalia, et al. in 2000 stated that indirect measurement is often called as non-invasive blood pressure measurement. The upper arm, containing the brachial artery, is the common site for indirect measurement because of its closeness to the heart and convenience of measurement, although many other sites may have been used such as forearm or radial artery, finger etc. Distal sites such as the wrist may give much higher systolic pressure than brachial or central sites as the result of the phenomena of impedance mismatch or reflective waves (Saul, 1995). A cuff is normally placed over the upper arm and is inflated to a pressure greater than the systolic blood pressure. The cuff is then gradually deflated, while a detector system simultaneously employed determines the point at which the blood flow restored to the limb.

The author explained non-invasive blood pressure measurement as well the comparison of upper arm and wrist in getting blood pressure. These concepts were used and gave the group an idea of implementing the design using the upper arm as the source of indirect blood pressure measurement.

There are two common methods of indirect blood pressure measurement that we have learned based from the Blood Pressure Measurements book. These methods were analyzed and studied by the group to determine the method that is applicable to our design.

Auscultatory method uses sphygmomanometer, a cuff and a stethoscope. The stethoscope is placed over the blood vessel for auscultation of the Korotkoff sounds, which defines the systolic pressure and diastolic pressure. The Korotkoff sounds are mainly generated by the pulse wave propagating through the brachial artery. The Korotkoff sounds consist of five phases. The onset Phase I Korotkoff sounds (first appearance of clear, repetitive tapping sounds) signifies systolic pressure and the onset of Phase V Korotkoff sounds (sounds disappear completely) often defines diastolic pressure.

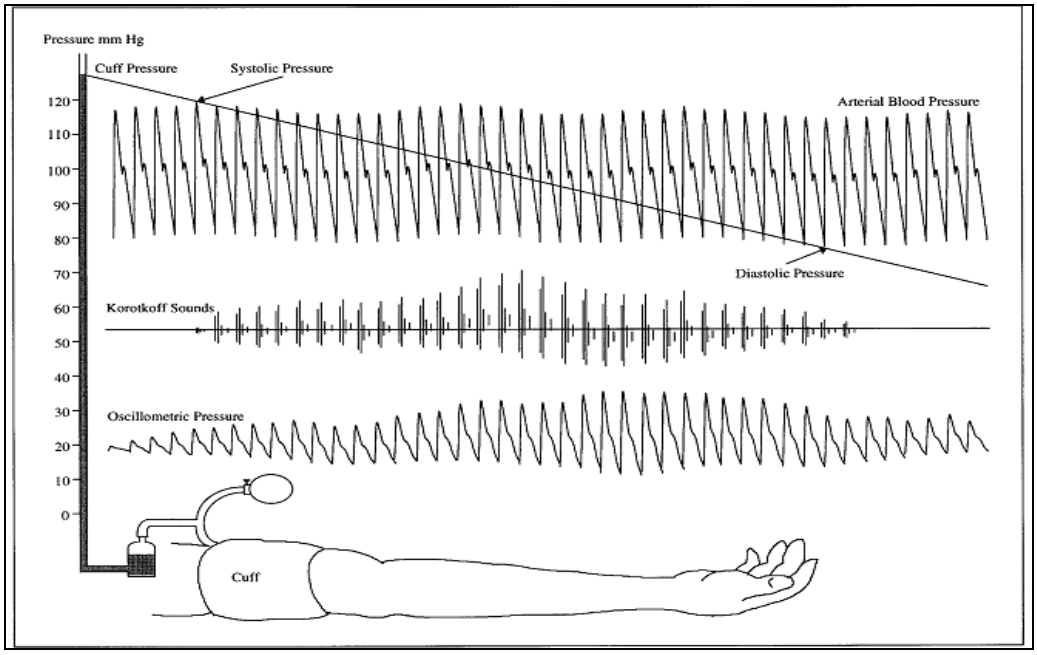

Figure 2.1 Indirect Blood Pressure Measurements

The Figure 2.1 illustrates the methods for indirect blood pressure measurements. It shows how the pressure wave or sound wave moves during the process of detecting the blood pressure. The information illustrated was used in the study to understand the behavior of the signal from the pressure in the arm cuff during the deflation period at a given pressure.

In recent years, electronic pressure and pulse monitors based on oscillometry have become popular for their simplicity of use and reliability. The measurement principle of the Oscillometric Method is a measurement of the amplitude of the pressure change in the cuff as it is inflated from above the systolic pressure. The amplitude suddenly grows larger as the pulse breaks to the occlusion. This is very close to systolic pressure. As the cuff pressure is further reduced, the pulsation increase in amplitude reaches a maximum and then diminishes rapidly. The index of the diastolic pressure is taken where this rapid transition begins. Therefore, the systolic blood pressure and diastolic blood pressure is obtained by identifying the region where there is a rapid increase then decrease in the amplitude of the pulses respectively. An approach using this technique could start with a cuff placed around the upper arm and rapidly inflated to about 30 mmHg above the systolic blood pressure, occluding blood flow to the brachial artery (Rithalia et al., 2000).

It is important to know on how blood pressure is measured using those two techniques. The oscillometric method is the technique which was used to the design because of its simplicity to use. There is no need for a small improvised

stethoscope to determine which Korotkoff sound is the systolic and diastolic but instead a pressure sensor will be used in the arm cuff of the design to determine the amplitude of the pressure during deflation. This information helped the group to understand the principles in getting the blood pressure measurements automatically.

A study entitled "Development of Automatic Blood Pressure Meter at Home" by Nan H. Kim, et al. published in Annual International Conference of the IEEE Engineering in Medicine and Biology Society (1990), it is stated that most clinical measurements of arterial blood pressure are made by sphygmomanometer. Automated blood pressure meter has been developed as a substitute for the manual sphygmomanometer. The design in this study is named SE-1000 which has been manufactured by Sein Electronic Co. in Korea.

Using oscillometric method and a microcomputer MN175451 the digital blood pressure meter was developed to measure blood pressure automatically and the composition of this equipment is divided into three parts such as hardware, software and specifications how the blood pressure meter is developed.

Using this article, it helped the group to bring out an idea on how the design will be developed as shown in Figure 2.2 on page 18.

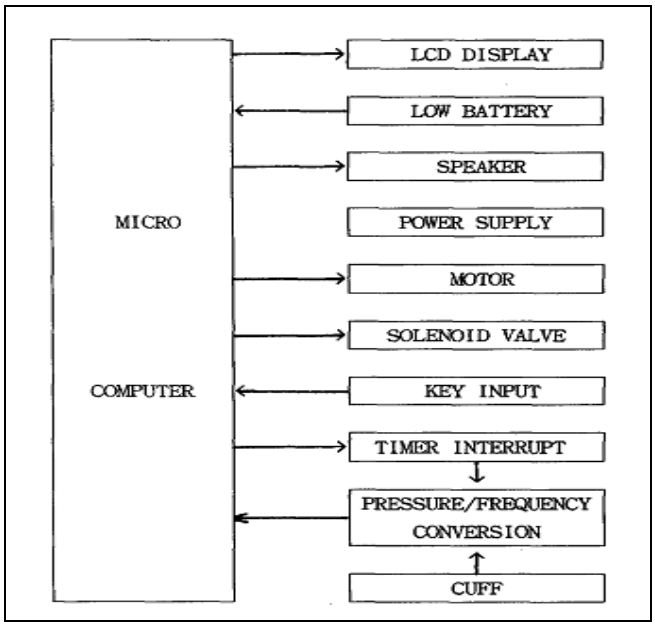

Figure 2.2 Hardware Block Diagram of SE-1000

The figure above gave the idea about the components that are going to use for the design. It shows the different components used in SE-1000 such as micro computer, LCD display, battery, speaker, power supply, motor, solenoid valve, timer, pressure/frequency converter and cuff. It shows the interaction between the components and the micro computer that was used. Some of the components here were applied in the hardware construction of the design.

The software part in the article explains the controls on the hardware and processes the input signal. These are the functions of the software of SE-1000 written in the article such as auto zeroing, auto power off, removal of artifacts, display of the blood pressure and pulse rate readings. These functions that were stated in the article are used to conceptualize the process and form the programming part of the design.

The article also gave us the concept of improving the functions of this study, and helped us to plan on how to record the measurements displayed from the design. The function of SE-1000 is only to display the readings.

In the article "Oscillometric Blood Pressure Monitor Identification" published in the journal 30th Annual International IEEE EMBS Conference by Eduardo C. Pinheiro in year 2008, demonstrated a study and experiment that he conducted. The experiments were conducted using a wrist-OBPM air pump KOGE KPM14A, a KOGE KSV05A solenoid valve, the MEASUREMENT SPECIALITIES 1451 pressure sensor and a NATIONAL INSTRUMENTS USB-6008 Multifunction I/O board with a defined sampling and writing rate of 50 Samples/second.

The OBPM identification tests were developed connecting the air flow circuit output to a wrist inflatable cuff, and repeated in a constant volume reservoir, to perceive the differences in the system behavior induced by the reservoir inflation.

This information helped the researchers to know the type of motor and valve that will be used in the design prototype. The idea of using KOGE as brand of motor and solenoid valve was also adapted to our design to guarantee the function of the inflation and deflation process. The motor to be used is important in producing an air during the inflation process. Every motor has its own specifications and pressure range. The solenoid valve is also needed to consider in the design.

Another related study that was used in the design is the article entitled "Integrating Analog and Digital Signal Conditioning in a Programmable System on Chip" published by Dennis Seguine from IEEE journal in 2000, it is stated that sensors are analog and modern communication methods are digital. Programmable System on Chip (PSoC) mixed signal microcontrollers offer interconnect and signal processing techniques for the design of very low cost smart sensors. Interface requirements of the sensors drive the analog design of the PSoC microcontroller application in multiplexer, amplifier, filter, and digitizing methodologies to support creation of the basic blocks which can be configured to meet system needs.

The group is going to use a pressure sensor that will be interfaced in a CY8C29466 microcontroller. An example in the article uses a CY8C25xxx type of PSoC microcontroller. The microcontroller architecture has analog module and digital module. The analog functions are organized as groups of general purpose analog blocks that can be configured into a user determined functions. The controls of these blocks are register based and may be programmed or reprogrammed by the user at run time. The analog array has twelve programmable blocks that are connected to direct port inputs, input multiplexers, column clock resources and output buffers.

The digital module blocks include preprogrammed functions for basic timer, counter and pulse width modulator. Flexible interconnect to analog and

digital blocks, General Purpose Input/Output (GPIO) and run-time programmability makes the blocks an essential part of the analog acquisition.

These concepts about the analog and digital module of the PSoC microcontrollers helped the group to understand how the analog to digital conversion takes place after the pressure has been detected by the sensor. Specialized features in the CPU of the PSoC include a decimator for conversion of delta sigma Analog-Digital Converter outputs to parallel data. The idea on interfacing the sensor of the design to a PSoC microcontroller was also learned from the article.

In our design, the use of PSoC microcontroller offers a unique set of flexible resources to accomplish sensor interface and system control. The ability to reprogram analog and digital hardware functionality allows the design to be implemented in a microcontroller.

Chapter 3

DESIGN METHODOLOGY AND PROCEDURES

Design Methodology

The design methodology used is developmental research. It is a process of finding or developing a better design that has been available. Using this type of research is important in improving this field of technology. The group research focused on the different studies from the past up to the present in relation to the design project. To further understand the design concepts, additional information and concepts needed were gathered from books, journals and internet. The data gathered provides a solution to the process of the system. This method helps the design obtain balance objectives and expectations from the actual results of the produced design prototype.

Design Procedure

Figure 3.1 on page 23 shows the process on how the research study is done. The first step is to identify the problem of the study; the group has gathered information about the problems that were encountered using the existing digital blood pressure meter available in the market. After gathering information, we researched on different related literature and studies through books, journals and internet to support our design. Using all the articles that we selected, the group discussed all the concepts that we are going to apply in our design. We determined the features and functions it will cover. The circuit diagram was then created, and we gathered all the appropriate components that

we are going to use considering its usability and functionality in the design. Since we already have all the tools and components for our design, the development of the PSoC based blood pressure monitor was started.

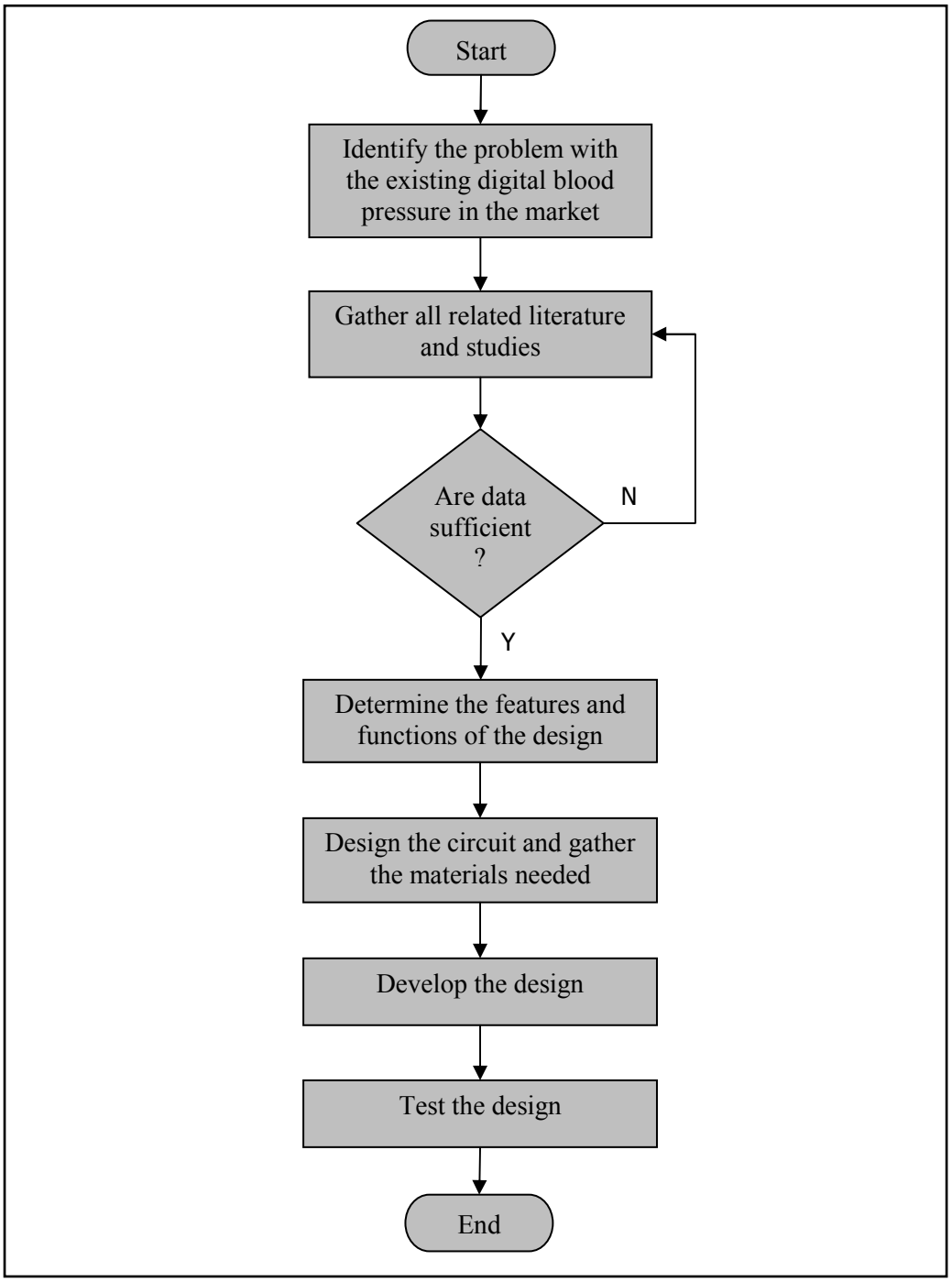

Figure 3.1 Design Procedure Flowchart

Design Procedure for Actual Design

The design started after gathering all the components and information needed for the development.

Here are the steps that we followed in creating the design:

1. Develop the PCB layout of the blood pressure monitor using the PCB Wizard software. Print the PCB layout on acetate.
2. Cut the printed circuit board acetate.
3. Place the acetate with PCB layout on top of the printed circuit board. Expose it to UV light.
4. Dissolve developer into the right amount of water. Place the printed circuit board into the solution and wait for a few minutes until the solution reacts with the PCB.
5. Etch the layout on the printed circuit board.
6. When the layout is visible, wash the PCB with water. Place the etched circuit board on a ferric chloride to dissolve unwanted copper.
7. Test all the connections of the circuit board using VOM, and check for continuity. Drill holes for all the proper layout of the components.
8. Mount all the components needed for the design except for the microcontroller.
9. Solder all the components properly.
10. Make a program for the design using PSoC Express 3.0 or PSoC Programmer using C language and Assembly language.

11. Simulate program in the PSoC Express if all the functions are working and if there are no errors.
12. Transfer the program on the PSoC microcontroller using a compatible PSoC Burner device.
13. Mount the microcontroller on the corresponding IC socket on the circuit board.
14. Place and screw the circuit board inside the casing.
15. Measure the dimensions of the LCD module. Mark the outline on the center of the cover of the plastic case. Cut the edges on the marked outline, and position the LCD module, and screw it on.
16. Mark outlines for the push buttons, and AC adaptor slot. Cut holes on the outlines that fit the components.
17. Place the motor, solenoid valve, relay and batteries inside the case properly. Make sure to attach each of them by using adhesive.
18. Connect all the ports from the circuit board to the LCD module.
19. Create a hole on the box and attach the arm cuff. Glue it properly so that there is no opening for the air to leak.
20. Test if the design is working according to its functions. Troubleshoot if necessary.

Hardware Design

Figure 3.2 on page 27 is an illustration of the block diagram of the hardware design. Initially, the user will press the push button to start the

operation. The prototype is using CY8C29466 PSoC microcontroller which triggers the air pump motor to inflate the arm cuff. After the inflation period, the microcontroller activates the solenoid valve to deflate the arm cuff gradually. During deflation period, the pressure sensor detects all the pressure change produced by the pulse beat of the user. The pressure sensor outputs a signal that travels to the op-amp and will be amplified so that it will not lose the efficiency of the data. This amplified signal will go to the ADC Module of PSoC microcontroller to convert the signal from analog to digital. The CY8C29466 handles the process of determining the blood pressure and pulse rate as it is being stored temporarily to the memory of the microcontroller. After that, the microcontroller will send a signal to the LCD driver to open the segments of the I/O ports of the LCD. The results of the readings will be displayed and then stored to the memory of the microcontroller.

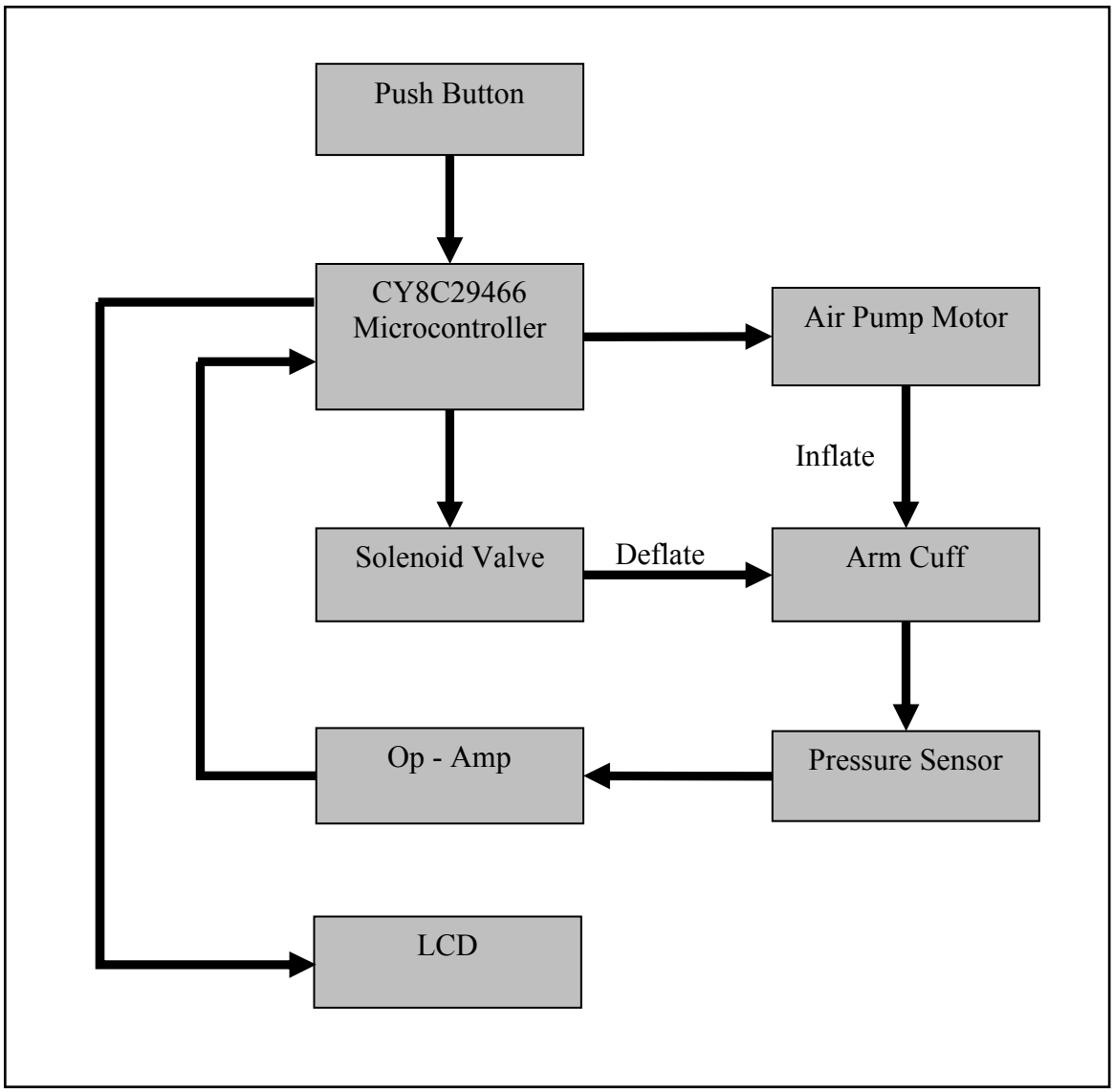

Figure 3.2 Block Diagram of Hardware Design

List of Materials

Description	Quantity	Price per unit	Total
28 pin CY8C29466-24PXI	1pc	Php 360.00	Php 360.00
28 pin IC Socket	1pc	Php 8.00	Php 8.00
6V KMP27C Motor pump	1pc	Php 180.00	Php 180.00
6V KSV05B Solenoid valve	1pc	Php 87.00	Php 87.00
MPS 2000 dip pressure sensor	1pc	Php 600.00	Php 600.00
LM324	1pc	Php 9.00	Php 9.00
12V SPST Relay	1pc	Php 35.00	Php 35.00
12V/1A DC Fuse	1pc	Php 12.00	Php 12.00
L7806CV Regulator	1pc	Php 12.50	Php 12.50
LCD Module	1pc	Php 1,500.00	Php 1,500.00
625-ohm 1/4 watt Resistor	1pc	Php 0.50	Php 0.50
125-ohm 1/4 watt Resistor	1pc	Php 0.50	Php 0.50
5k-ohm 1/4 watt Resistor	4pcs	Php 0.50	Php 2.00
1k-ohm 1/4 watt Resistor	4pcs	Php 0.50	Php 2.00
160k-ohm 1/4 watt Resistor	2pcs	Php 0.50	Php 1.00
100k-ohm 1/4 watt Resistor	2pcs	Php 0.50	Php 1.00
1.6M-ohm 1/4 watt Resistor	1pc	Php 0.50	Php 0.50
0.01mF Capacitor	2pcs	Php 2.00	Php 4.00
2N3702 pnp Transistor	2pcs	Php 5.00	Php 10.00
LED Indicator	1pc	Php 0.50	Php 0.50
1N4001 Diode	1pc	Php 1.00	Php 1.00
Printed Circuit Board	2pcs	Php 50.00	Php 100.00
Push button	4pcs	Php 16.25	Php 65.00
Plastic casing	1pc	Php 140.00	Php 140.00
Wires	3m	Php 1.50	Php 4.50
AC Adaptor	1pc	Php 150.00	Php 150.00
Rechargeable AA Battery	5pcs	Php 40.00	Php 200.00
Arm cuff	1pc	Php 175.00	Php 175.00
Total Price			Php 3,661.00

Table 3.1 List of Materials and Cost

Hardware Component

The blood pressure monitor that was designed consists of different components such as push button, rechargeable battery, pressure sensor, operational amplifier, air pump motor, solenoid valve, LCD module, resistor, transistor, relay, voltage regulator and 28 pin PSoC microcontroller.

The push buttons serve as input for the design. It is used for switching on and off the power, setting the mode, searching for recorded data and changing the date and time. The rechargeable batteries are the source of power of the prototype to make it work. Once the prototype is on and is set to start the operation, the air pump motor produces air to inflate the arm cuff. The solenoid valve role is to release the pressure from the arm cuff if it is triggered by the microcontroller. The pressure sensor is a component which generates a signal from the pressure change detected in the arm cuff. That signal will be amplified as it passes through the op amp then it goes to the microcontroller and will be converted from analog to digital signal. The LCD module utilizes a built-in LCD driver which is used to activate the segments of the LCD display. Resistors are used to limit the flow of the electric current in the entire circuit. A relay is used as a switch in transferring an electric power while charging the device. Transistors are used as a switch also to drive the positive signal to run the air pump motor and the solenoid valve. The voltage regulator is used to regulate the voltage supply for the PSoC and to the components of the entire circuit. The

PSoC is the IC that was programmed to call and do the functions of the components of the entire circuit.

Circuit Design

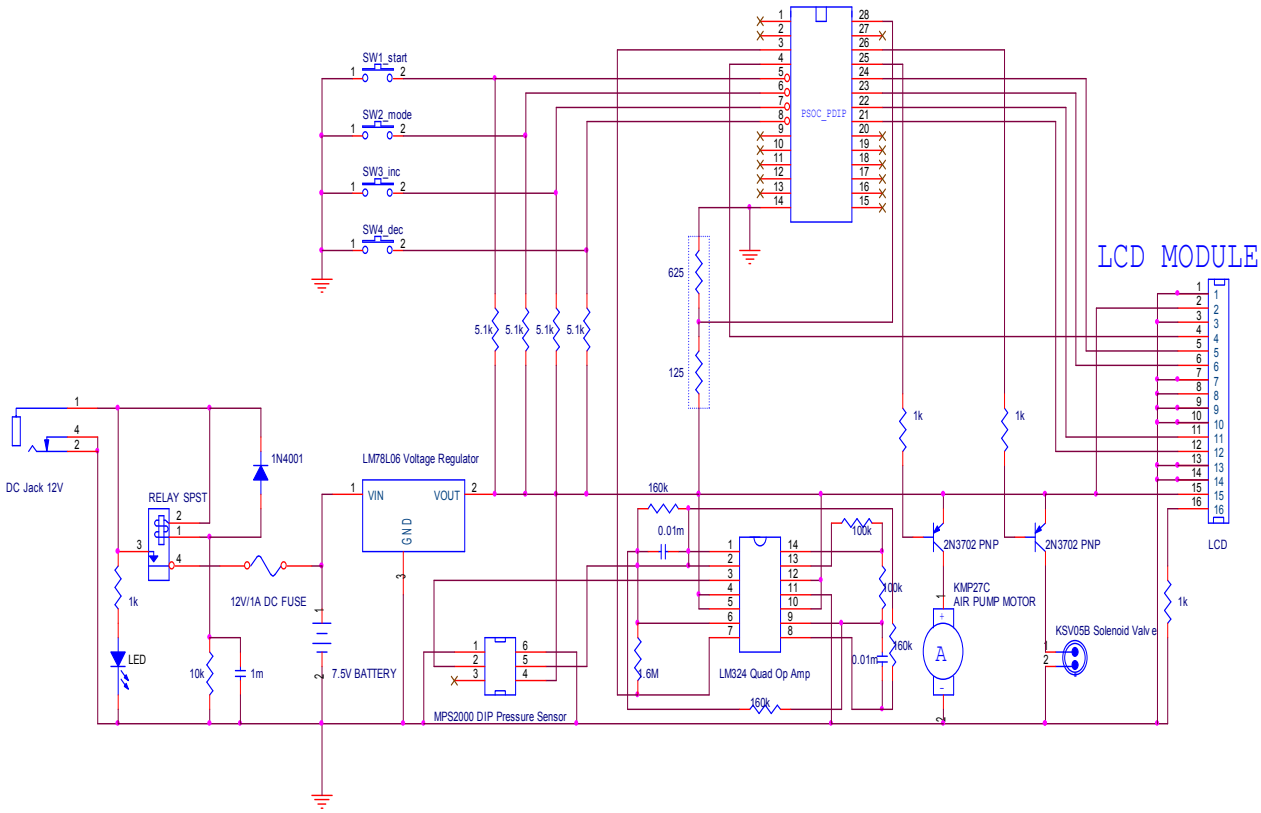

Figure 3.3 Schematic Diagram of the Design

This figure shows the whole circuitry of the design including the microcontroller's connection to the LCD module. There are four push buttons in the design: Up and Down which can be used to navigate through the stored readings in the memory and help in setting the time and date; Mode or Set which is used to invoke the set time and date function and also to start viewing of the stored readings; Power or Start or Stop which will power on the device, and start or stop the inflation of the cuff. When the adaptor is plugged or

connected on the power outlet, the circuit will automatically get the regulated current from the adaptor while charging the battery. If not plugged, the circuit will get electric current from its rechargeable battery. See Figure 6.1 for the enhanced version of the circuit diagram.

Hardware Implementation

In the implementation of the circuit design, a 6V voltage regulator is used to control the voltage coming from either the DC voltage from the adaptor (while the device is charging), or from the battery (while operating on battery power). The output of 6V is used to power other components such as the solenoid valve, the air pump motor, the pressure sensor, the operational amplifier, and the LCD module. A voltage divider circuit, composed of a 125 ohm and a 625 ohm resistor, is used to obtain a 5V input for powering the PSoC. The computation of the voltage is shown below.

The typical PSoC input current is 8mA, at input voltage of 5V:

$$\mathbf{R_2 = \frac{5V}{8mA}}$$

$$\mathbf{R_2 = 625\Omega}$$

$$\mathbf{\frac{V_{out}}{V_{in}} = \frac{R_2}{R_1 + R_2}}$$

$$\mathbf{R_1 = (R_2)\left(\frac{V_{in}}{V_{out}} - 1\right)}$$

$$\mathbf{R_1 = 125\Omega}$$

Where V_{in} is the input voltage coming from the 6V voltage regulator, and V_{out} is the voltage used for powering the PSoC.

Software Design

The program was created using the free software of the Cypress Company for the beginners. PSoC Express 3.0 is the software that we have used in developing the program. The software is designed for the PSoC microcontroller to handle the process of getting blood pressure up to the function of displaying the reading. The software was created by selecting all the components needed for the design in the PSoC Express 3.0; and was developed using C Language. Assembly Language is also used in doing the software, a low-level language that implements numeric machine code since port addressing is very important to make all the components working.

Software Component

PSoC Express is the development tool that we used to develop a microcontroller-based design. Due to its features, we are able to create, simulate and program the software for our design. Assembly language and C Language are the languages that we used.

System Flowchart

The system flowchart of the design project is illustrated in Figure 3.4 on page 34. It shows how the operation of the system works under different conditions.

To start the system, press and hold the power button to switch on the device. There are two operations that a user can choose from: to get blood

pressure reading or to recall previous reading. An option to configure the date and time can be done before starting the operation.

If the user chooses an operation to get blood pressure reading, wrap the arm cuff at the upper arm and press start button; inflation of the arm cuff will follow. Anytime during this process, the user may stop the inflation by pressing the stop button. Upon reaching the required pressure, it will start to deflate gradually. The systolic and diastolic pressures, as well as the pulse rate, are detected and calculated until the arm cuff deflates completely. Readings will be displayed and then will be stored in the memory of the microcontroller.

If the user chooses an operation to recall previous reading, press the mode button and select which memory module. Previous readings can be viewed using the up and down buttons.

The system will still continue working every after operation unless the user chose to turn off the device by pressing and holding the start button. The device automatically switches off when left idle for a few minutes.

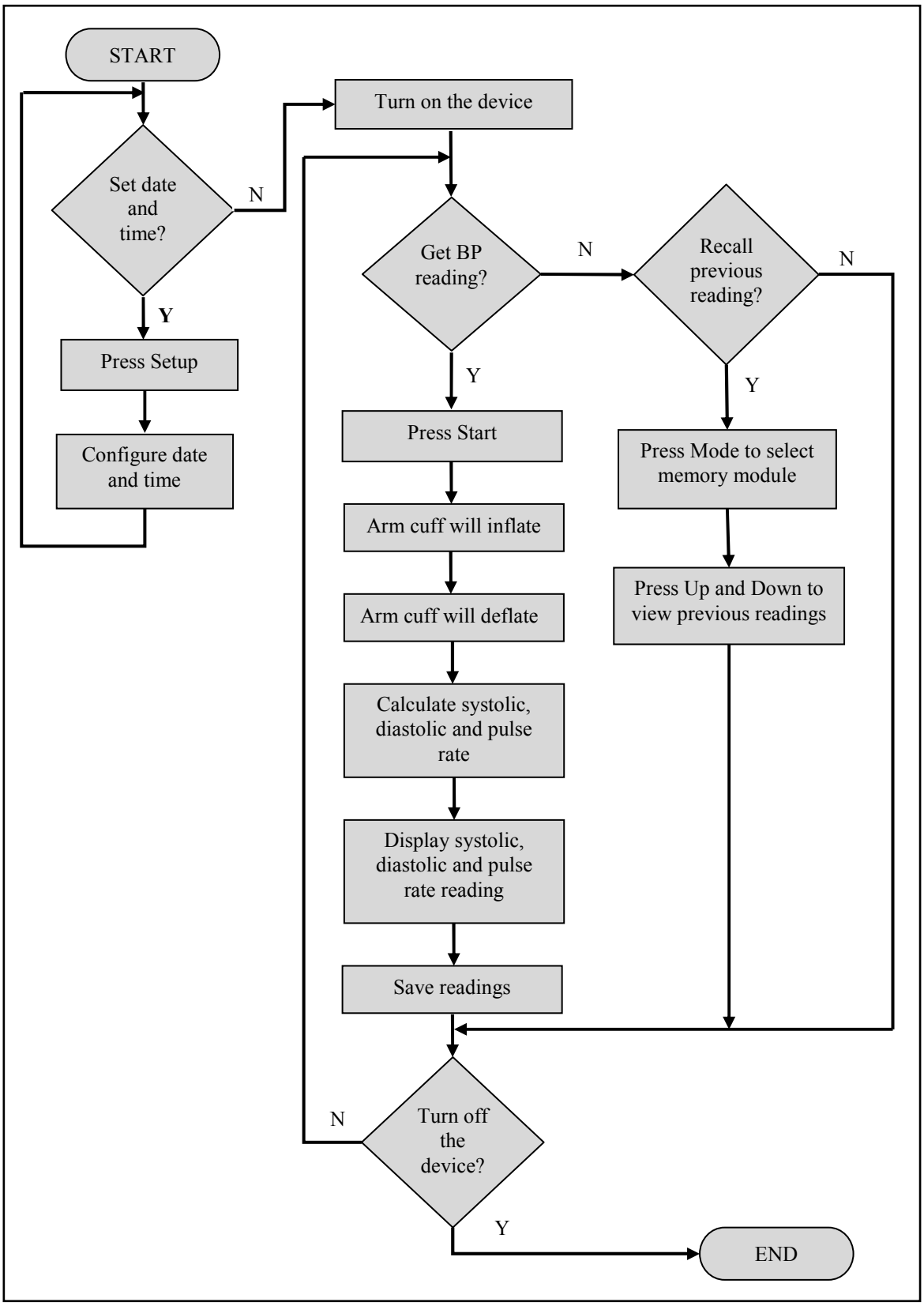

Figure 3.4 System Flowchart of the Design Prototype

Prototype Development

Figure 3.5 Actual Photo of the Prototype

Figure 3.5 show the actual picture of the PSoC based Blood Pressure Monitor. It shows here how each component is properly placed inside the case. The arm cuff is connected outside of the case and cannot be detached. The components of the design were tested and chosen according to its function. After doing all research and study, the ideas came in and were applied through developing the correct circuit and program for the design. Testing and troubleshooting were conducted to make this design working correctly. The reliability and accuracy are the main features that we considered accordingly.

CHAPTER 4

TESTING, PRESENTATION AND INTERPRETATION OF DATA

Majority of the concepts behind the design are generally based on many of the existing types of blood pressure monitoring devices that are currently available in the market. Therefore, it is necessary to test whether the device would yield similar results as compared to the existing ones. We are to test the design prototype for its accuracy, reliability, and efficiency. This chapter covers all the tests done and the discussions of the results, as well as the significance to the study.

Testing of Accuracy

It is very important to determine how accurate the design prototype is when obtaining results. This test is conducted to prove that the accuracy of the design is as consistent as any other blood pressure measuring device available in the market. As for this test, the blood pressure monitor that the prototype will be compared to is the Full Automatic Kodea® Blood Pressure Monitor, which also utilizes arm cuff automated inflation and pressure sensor to obtain pulse readings.

Before the test is conducted, there were several pointers to obtain accurate results. When measuring blood pressure, an accurate reading requires that one should not drink coffee, smoke cigarettes, or engage in strenuous exercise for 30 minutes before taking the reading. A full bladder may have a small effect on blood pressure readings, so if the urge to urinate exists, one

should do so before the reading. For 5 minutes before the reading, one should sit upright in a chair with one's feet flat on the floor and with limbs uncrossed. The blood pressure cuff should always be against bare skin, as readings taken over a shirt sleeve are less accurate. During the reading, the arm that is used should be relaxed and kept at heart level, for example by resting it on a table (National Heart, Lung and Blood Institute. *Tips for having your blood pressure taken*.). The following procedures are done for testing the accuracy of the prototype device:

1. Choose four random persons to be the test subjects.
2. Gather information about each test subject through a simple interview.
3. Make necessary preparations before obtaining the readings. Refer to Appendix H: User's Manual for step-by-step procedures.
4. After each reading, rest the test subject for five minutes before performing another reading.
5. After obtaining ten readings, follow the same procedures to get results using the Kodea® BPM.
6. Follow the same procedures for all test subjects.
7. Compute for the average of the systolic, diastolic, and pulse rate readings for both devices respectively.
8. Compute for the percentage difference and analyze the results.

There are certain assumptions that should first be considered when conducting the test. The readings are determined to be correct, or at least

reliable, based on the classification of blood pressure. The following table indicates how the readings are being classified according to WHO (World Health Organization).

Category	Systolic, mmHg	Diastolic, mmHg
Optimal	less than 120	or less than 80
Normal	less than 130	or less than 85
High Normal	130 – 139	85 – 89
Stage 1 Hypertension	140 – 159	90 – 99
Stage 2 Hypertension	160 – 179	100 - 109
Stage 3 Hypertension	greater than or equal to 180	greater than or equal to 110

Table 4.1 Classification of Blood Pressure Reading for Adults

There are many physical factors that influence arterial pressure. Each of these may in turn be influenced by physiological factors, such as diet, exercise, disease, drugs or alcohol, obesity, excess weight and so-forth. Therefore, to tell whether the readings are acceptable, we determined physical information on the test subjects, as well as their medical background. This is to distinguish if the readings are still in accordance with these physical factors.

There are four different persons to undertake the tests. Two of which has been determined to have medical illness which is critical in the analysis of the results. The following tables show the systolic and diastolic readings of the test subjects, as well as the pulse rate readings. For comparison, the readings from the prototype and from the Kodea® BPM are made adjacent in each table. A total of ten readings shall be taken from each test subjects. Since the blood

pressure readings vary from time to time, we shall take the average of the ten readings to determine the most accurate value of the reading.

The first test subject is a 53 year-old female, weighing 100 pounds, standing at 4-feet-3-inches, with no known medical disorder.

Test Subject A					
Prototype			**Kodea® BPM**		
Systolic (mmHg)	**Diastolic (mmHg)**	**Pulse Rate**	**Systolic (mmHg)**	**Diastolic (mmHg)**	**Pulse Rate**
111	73	61	112	70	62
104	61	60	114	71	62
108	67	59	110	70	61
112	70	64	115	72	63
117	77	62	111	69	61
116	70	60	115	74	63
112	65	58	109	67	60
118	77	69	112	70	62
115	71	65	113	71	62
108	70	58	112	70	62

Table 4.2 Test Results of Test Subject A

The second test subject is a 25 year-old female, weighing 105 pounds, standing at 5-feet, also without any known medical disorder.

Test Subject B					
Prototype			**Kodea® BPM**		
Systolic (mmHg)	**Diastolic (mmHg)**	**Pulse Rate**	**Systolic (mmHg)**	**Diastolic (mmHg)**	**Pulse Rate**
103	69	81	107	67	85
100	66	88	101	63	87
103	70	84	113	72	84
109	69	85	107	67	83
107	66	84	108	67	88
103	72	81	104	64	85
113	66	80	111	71	86
114	74	89	107	67	85
105	66	86	105	68	84
109	68	84	107	67	85

Table 4.3 Test Results of Test Subject B

As observed, the test results for both test subjects A and B have been identified to be in the optimal category, which shows no hint of hypertension conditions. That is, the systolic and diastolic readings are all below 120 and 80 respectively for both test subjects. This supports the fact that both test subjects are in healthy condition.

Moreover, all readings obtained from both blood pressure monitors indicate only a very minor differential compared to the readings from each other. When averaged, the prototype test results yield 112.1 over 70.1 with average pulse rate of 61.6, while the branded BPM test results yield 112.3 over 70.4 with average pulse rate of 61.8 for the test subject A. The prototype test results yield 106.6 over 68.6 with average pulse rate of 84.2, while the branded BPM test results yield 107.0 over 67.3 with average pulse rate of 85.2 for the test subject B. There is only a differential of less than 1.0 mmHg obtained for the averaged value of blood pressure readings.

The next test subject is a 24 year-old male, weighing 144 pounds, standing at 5-feet-4-inches, and is known to have developed an asthmatic condition.

Test Subject C					
Prototype			**Kodea® BPM**		
Systolic (mmHg)	**Diastolic (mmHg)**	**Pulse Rate**	**Systolic (mmHg)**	**Diastolic (mmHg)**	**Pulse Rate**
134	81	68	126	86	64
131	81	65	128	79	62
127	73	61	135	77	61
123	73	65	128	77	68
125	79	68	127	83	67
137	88	67	128	85	72
129	87	66	127	85	73
128	75	71	136	84	71
131	85	66	136	84	72
130	77	69	128	85	72

Table 4.4 Test Results of Test Subject C

The test results for test subject C yielded a more distinct range of values and are observed to be above the normal readings. The test subject has been identified to be at the High Normal category, in which the readings are considered to be at pre-hypertension level. The readings may have been influenced by the condition of the test subject of having asthma.

Similarly from the results of the previous test subjects, the readings from both blood pressure monitor indicate a very minimal differential. When averaged, the prototype test results yield 129.5 over 79.9 with average pulse rate of 66.6, while the branded BPM test results yield 129.9 over 82.5 with average pulse rate of 68.2 for the test subject. There is a differential of 2.6 mmHg obtained for the averaged value of the blood pressure readings.

The last test subject is a 62 year-old male, weighing 140 pounds, standing at 5-feet-4-inches, and is known to have diabetes.

Test Subject D					
Prototype			**Kodea® BPM**		
Systolic (mmHg)	**Diastolic (mmHg)**	**Pulse Rate**	**Systolic (mmHg)**	**Diastolic (mmHg)**	**Pulse Rate**
140	92	85	138	82	78
136	88	84	140	84	80
136	86	84	140	85	81
144	90	84	139	87	81
145	92	88	140	90	80
140	92	84	142	90	86
134	86	80	139	88	83
138	89	79	141	90	84
143	90	85	140	88	85
138	86	82	141	89	85

Table 4.5 Test Results of Test Subject D

The test results for test subject D yielded the highest range of values and are observed also to be above normal readings. The test subject has been identified to be between the High Normal category and the Stage 1 Hypertension category. The readings may have been influenced by the condition of the test subject of having diabetes.

The readings for the test subject from both blood pressure monitor also indicate a very minimal differential. The prototype test results yield an average of 139.4 over 89.1 with average pulse rate of 83.5, while the branded BPM test results yield an average of 140.0 over 87.3 with average pulse rate of 82.3 for the test subject. There is a differential of 1.8 mmHg obtained for the averaged value of the blood pressure readings.

Having obtained these data, we can determine the accuracy of the prototype as compared to the branded BPM. Table 4.6 shows the tabulated values of the averaged readings for the four test subjects.

Test Subject	Prototype			Kodea® BPM		
	Systolic (mmHg)	Diastolic (mmHg)	Pulse Rate	Systolic (mmHg)	Diastolic (mmHg)	Pulse Rate
A	112.1	70.1	61.6	112.3	70.4	61.8
B	106.6	68.6	84.2	107	67.3	85.2
C	129.5	79.9	66.6	129.9	82.5	68.2
D	139.4	89.1	83.5	140	87.3	82.3

Table 4.6 Computed Average of Test Results

The following are the formulas used to obtain the average values:

$$\mathbf{systolic_{average}} = \frac{\sum \mathbf{systolic\ values}}{\mathbf{number\ of\ tests}}$$

$$\mathbf{diastolic_{average}} = \frac{\sum \mathbf{diastolic\ values}}{\mathbf{number\ of\ tests}}$$

$$\mathbf{pulse\ rate_{average}} = \frac{\sum \mathbf{pulse\ rate\ values}}{\mathbf{number\ of\ tests}}$$

The formula below is used to obtain the percentage difference:

$$\mathbf{Percent\ Diff} = \frac{\mathbf{2\left(|x_1 - x_2|\right)}}{\mathbf{(x_1 + x_2)}} \times \mathbf{100}$$

where x_1 and x_2 indicates the value obtained from the Kodea® BPM and the value obtained from the prototype correspondingly.

Here is a sample computation of the percentage difference using the average systolic readings for test subject A.

$$\mathbf{Percent\ Diff} = \frac{\mathbf{2\left(|112.3\ mmHg - 112.1\ mmHg|\right)}}{\mathbf{(112.3\ mmHg + 112.1\ mmHg)}} \times \mathbf{100}$$

$$\mathbf{Percent\ Diff} = \mathbf{0.18\ \%}$$

Test Subject	Percentage Difference (%)		
	Systolic	Diastolic	Pulse Rate
A	0.18	0.43	0.32
B	0.37	1.91	1.18
C	0.31	3.20	2.37
D	0.43	2.04	1.45

Table 4.7 Computed Percentage Errors for Accuracy

The largest percentage difference computed based on the table is at 3.20%, the percentage difference obtained for the diastolic pressure of test subject C. This basically means that the PSoC-based Blood Pressure Monitor prototype operates at 96.80% accuracy compared to the Kodea® BPM.

Since the Kodea® BPM operates at a percentage difference of 3% or a ±5 mmHg differential of blood pressure readings, we may conclude that the prototype is as accurate as the market-based BPM based on its specifications.

Testing of Reliability

The design prototype may be operated either while on battery supply, or while the device is being charged. It is necessary to determine whether the device, while being charged, behaves and functions similarly when operating on battery supply. This is to prove that the direct connection to the power outlet of 220V does not affect the operation of the system.

Similar assumptions from the previous test conducted are to be followed. The following procedures are done for testing the reliability of the prototype device:

1. Choose ten random persons to be the test subjects.

2. Make necessary preparations before obtaining the readings. Refer to Appendix H: User's Manual for step-by-step procedures. Make sure that the battery of the device is charged before operating.
3. After the first reading, rest the test subject for five minutes before obtaining the second reading.
4. Record the average of the two readings.
5. Follow the same procedures for all the test subjects.
6. Do the same procedures, this time connect the adaptor to the device and the power outlet. This allows the device to operate while being charged.
7. Compute for the percentage difference and analyze the results.

By following these procedures, we have come up with these results:

Test Subject	Results While Operating on Battery Supply		Results While Charging	
	Systolic, mmHg	Diastolic, mmHg	Systolic, mmHg	Diastolic, mmHg
1	97	63	95	65
2	124	88	127	85
3	121	92	118	95
4	132	92	130	90
5	127	89	130	93
6	112	70	120	70
7	118	84	110	81
8	123	87	118	90
9	127	94	125	92
10	130	80	132	79

Table 4.8 Test Results for Reliability Testing

Having obtained these data, we can determine the reliability of the prototype while being charged compared to when the device is being operated on battery supply. The reliability of the design prototype is measured according

to the percentage difference of the readings. The formula below is used to obtain the percentage difference:

$$\text{Percent Diff} = \frac{2\left(|x_1 - x_2|\right)}{(x_1 + x_2)} \times 100$$

where the x_1 and x_2 is assumed to be the values obtained from the results while the prototype operates on battery supply and the values obtained from the results while prototype is being charged respectively.

Here is a sample computation of the percentage difference using the systolic values of the first test subject.

$$\text{Percent Diff} = \frac{2\left(|97\ \text{mmHg} - 95\ \text{mmHg}|\right)}{(97\ \text{mmHg} + 95\ \text{mmHg})} \times 100$$

$$\text{Percent Diff} = 2.08\ \%$$

Test Subject	Percentage Difference (%)	
	Systolic	Diastolic
1	2.08	3.13
2	2.39	3.47
3	2.51	3.21
4	1.53	2.20
5	2.33	4.40
6	6.90	0.00
7	7.02	3.64
8	4.15	3.39
9	1.59	2.15
10	1.53	1.26

Table 4.9 Computed Percentage Differences for Reliability

The largest percentage difference computed based on the table is at 7.02%, the percentage difference obtained for the systolic pressure of sixth test subject. This basically means that the PSoC-based Blood Pressure Monitor prototype operates at 92.98% accuracy while being charged compared to when the prototype operates on battery supply.

Chapter 5

CONCLUSION AND RECOMMENDATION

Conclusion

A Programmable System on Chip based Blood Pressure Monitor was created. The design prototype was tested for its accuracy, reliability, and efficiency. The design prototype has been determined to operate at an accurate percentage as compared to a similar blood pressure monitor available in the market.

The design prototype is capable of accurately reading systolic reading, diastolic reading and pulse rate reading. The prototype is successfully designed to be able to store the readings into four different memory modules that contain the date and time it was taken. This functionality was incorporated into the design for the user to have future reference of the previous readings.

The design prototype is also capable of operating using either a battery supply or a direct power supply as its main power source. The design implements the concept of a rechargeability function, through the use of rechargeable batteries. The battery supply can be recharged when a direct power supply is used by the circuit. The hardware implementation utilizes a relay to toggle operation while recharging the battery supply.

Recommendation

There could be further improvements or studies on this design. One way to innovate this is by creating a sugar level monitor aside from its main function,

which is getting the blood pressure of a person. A detachable arm cuff can also be implemented in this design so that it will not be limited to a specific arm circumference range. Lastly, it is also recommended to study the process on how a user creates a personal profile for storing their own readings properly.

BIBLIOGRAPHY

Alexander, Charles K. and Sadiku, Matthew N.O. (2003*). Fundamentals of Electric Circuits, 2nd Edition*, McGraw-Hill, New York.

Ashby, Robert (2005). *Designer's Guide to the Cypress PSoC,* Newnes, *MA.*

Brueschke, Erich E. M.D. (1993). *The World Book Rush-Presbyterian St. Luke's Medical Center Medical Encyclopedia, 6th edition,* World Book, Inc., Chicago, IL.

Floyd, Thomas L. (2002). *Electronic Devices, 6th Edition*, Pearson Education, Inc., publishing as Prentice Hall, New Jersey.

Fortmann, S.P. M.D. and P. Breitrose M.A. (1996). *The Blood Pressure Book, 4th Edition***,** Bull Publishing, Boulder, Colorado**.**

Rithalia, Shyam, et al. (2000). *Blood Pressure Measurement,* CRC Press LLC.

APPENDIX A

Circuit / Schematic Diagram

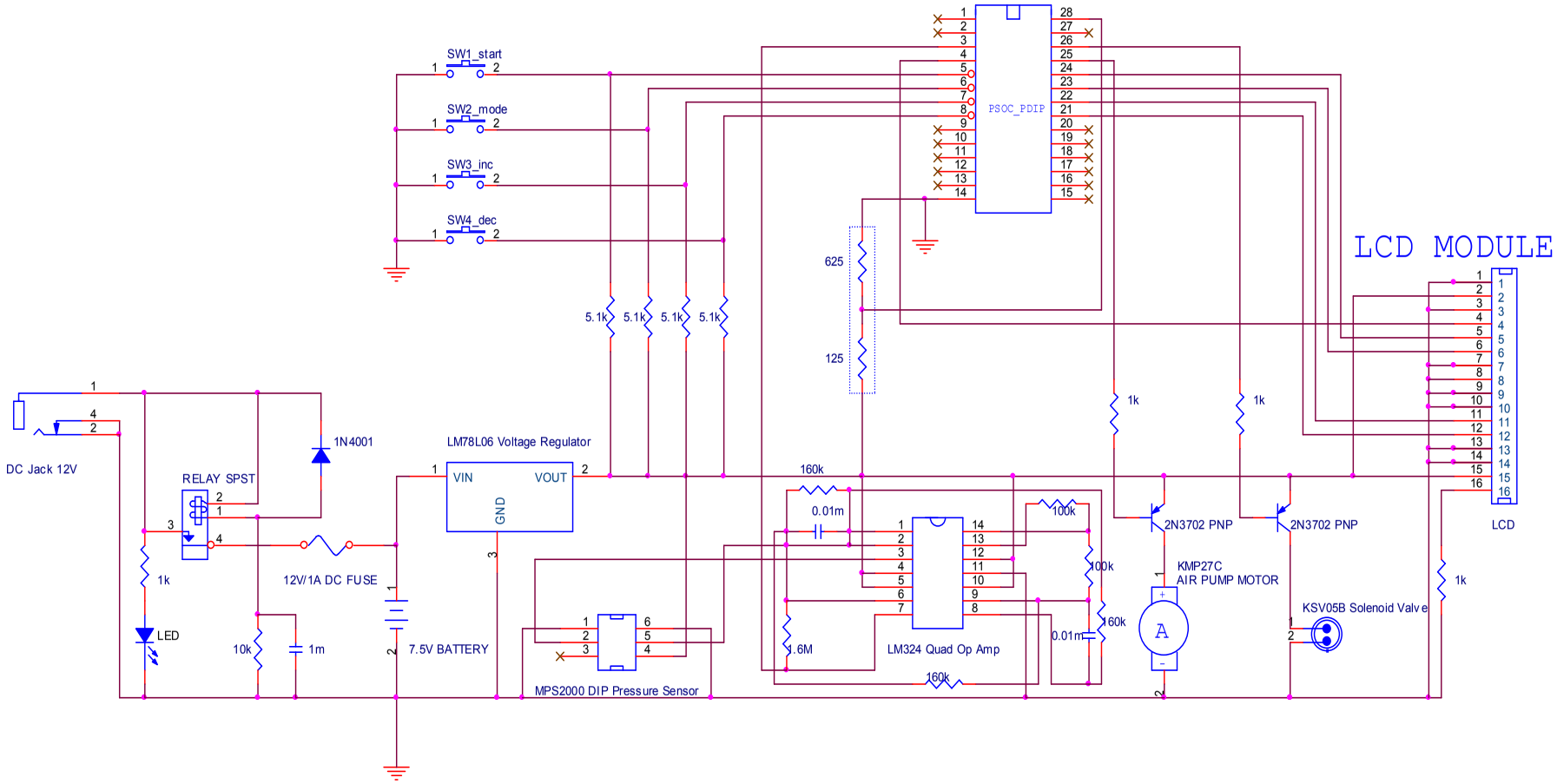

Figure 6.1 Schematic Diagram of PSoC based Blood Pressure Monitor

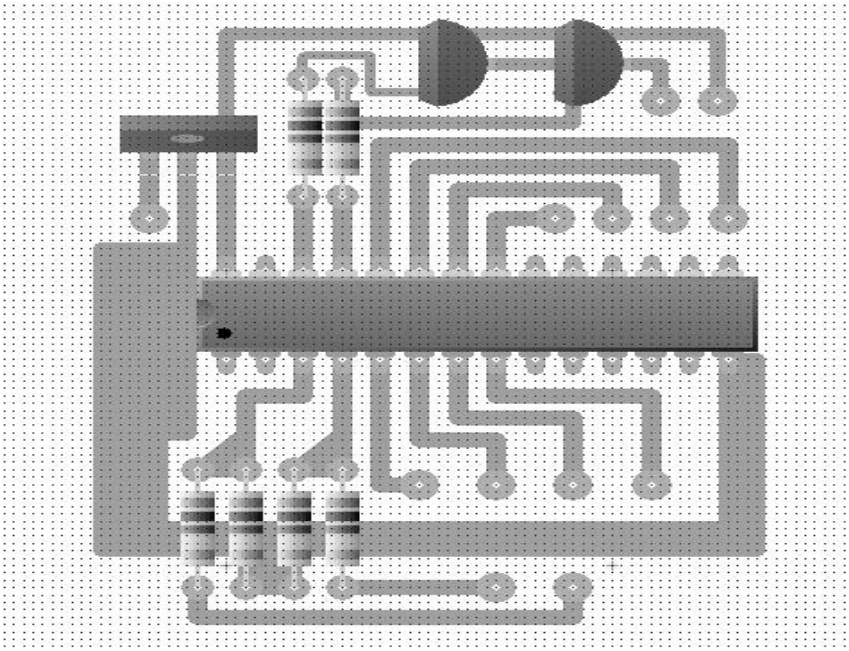

Figure 6.2 PCB Layout with components of the design

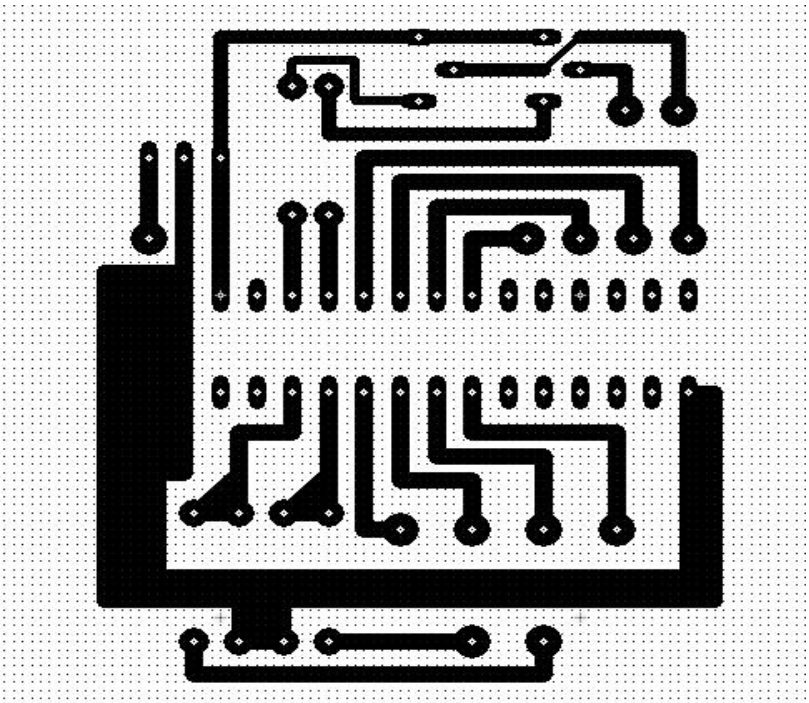

Figure 6.3 PCB Layout of the design

APPENDIX B

Source Code

```
//-----------------------------------------------------------------------
-------
// C main line
//-----------------------------------------------------------------------
-------

#include <m8c.h>          // part specific constants and macros
#include "PSoCAPI.h"      // PSoC API definitions for all User Modules

#include "driverdecl.h"
#include "CMXSystem.h"
#include "CMXSystemExtern.h"
#include "TransferFunction.h"

#include "cmx.h"
#include "ProjectProperties.h"
#include "Custom.h"

// Channel includes
// ADC_00 Include
#include "CMX_ADC_CHAN.h"

void main()
{
    // Initialize Project
    M8C_EnableGInt;                             // Turn on interrupts
    I2C_CFG &= 0xFC;                            // Disable I2C in case
it's not used.
    SystemTimer_Start();
    SystemTimer_SetInterval(SystemTimer_64_HZ);
    SystemTimer_EnableInt();

    // Initialize Channels
    // ADC_00 Initialization
    ADCBUF_Start(3); // Power up ADC Buffer PGA
    ADC_Start(3); // Power up ADC
    AdcScanReset(); // Initialize ADC scanner
    ADC_GetSamples(0); // Turn on GetSamples

    // Initialize Variables
      SystemVars.ReadOnlyVars.pse_Minus = 0;
      SystemVars.ReadOnlyVars.pse_Mode = 0;
      SystemVars.ReadOnlyVars.pse_Plus = 0;
      SystemVars.ReadOnlyVars.pse_Switch_on = 0;
      SystemVars.ReadOnlyVars.pse_air = 0;
      SystemVars.ReadOnlyVars.pse_air_switch = 0;
      SystemVars.ReadOnlyVars.pse_motor = 0;
      SystemVars.ReadOnlyVars.pse_neg = 0;
      SystemVars.ReadOnlyVars.pse_pos = 0;
      SystemVars.ReadOnlyVars.pse_power = 0;
      SystemVars.ReadOnlyVars.pse_pump = 0;
      SystemVars.ReadOnlyVars.pse_set = 0;

    // Driver instantiations
CMX_DIO_Instantiate(&pse_neg);
CMX_DIO_Instantiate(&pse_motor);
CMX_DIO_Instantiate(&pse_air);
```

```
CMX_GSWITCH_Instantiate(&pse_Switch_on);
CMX_DIO_Instantiate(&pse_power);
CMX_GSWITCH_Instantiate(&pse_Mode);
CMX_DIO_Instantiate(&pse_set);
CMX_GSWITCH_Instantiate(&pse_Plus);
CMX_DIO_Instantiate(&pse_pos);
CMX_GSWITCH_Instantiate(&pse_Minus);
CMX_mVolts_Instantiate(&pse_pump);
CMX_mVolts_Instantiate(&pse_air_switch);

    // Custom initization code.
    CustomInit();
    // End Initialize Project

      while(1)
      {
        // Sync loop sample rate
#if ( SAMPLE_DIVIDER  )
        SystemTimer_SyncWait(SAMPLE_DIVIDER, SystemTimer_WAIT_RELOAD);
#endif
            // update input variables
            SystemVars.ReadOnlyVars.pse_Minus =
CMX_GSWITCH_GetValue(&pse_Minus);
            SystemVars.ReadOnlyVars.pse_Mode =
CMX_GSWITCH_GetValue(&pse_Mode);
            SystemVars.ReadOnlyVars.pse_Plus =
CMX_GSWITCH_GetValue(&pse_Plus);
            SystemVars.ReadOnlyVars.pse_Switch_on =
CMX_GSWITCH_GetValue(&pse_Switch_on);
            SystemVars.ReadOnlyVars.pse_air_switch =
CMX_mVolts_GetValue(&pse_air_switch);
            SystemVars.ReadOnlyVars.pse_pump =
CMX_mVolts_GetValue(&pse_pump);

        // Custom Post Input function
        CustomPostInputUpdate();

            // run transfer function and update output variables
            TransferFunction();

        // CustomPreOutputUpdate();
        CustomPreOutputUpdate();

            // set outputs
            CMX_DIO_SetValue(&pse_air,
(BYTE)SystemVars.ReadOnlyVars.pse_air);
            CMX_DIO_SetValue(&pse_motor,
(BYTE)SystemVars.ReadOnlyVars.pse_motor);
            CMX_DIO_SetValue(&pse_neg,
(BYTE)SystemVars.ReadOnlyVars.pse_neg);
            CMX_DIO_SetValue(&pse_pos,
(BYTE)SystemVars.ReadOnlyVars.pse_pos);
            CMX_DIO_SetValue(&pse_power,
(BYTE)SystemVars.ReadOnlyVars.pse_power);
            CMX_DIO_SetValue(&pse_set,
(BYTE)SystemVars.ReadOnlyVars.pse_set);
```

```
      }
}
//*********************************************************************
********
//*********************************************************************
********
//  FILENAME:  calibration.c
//  @Version@
//  `@PSOC_VERSION`
//
//  DESCRIPTION:  This files contains the calibration constansts for
the
//                ADC. Currently these values are default values that
//                are not calibrated.
//
//---------------------------------------------------------------------
--------
//      Copyright (c) Cypress MicroSystems 2004. All Rights Reserved.
//*********************************************************************
********
//*********************************************************************
********

#pragma abs_address:0x7FC0
const int CountsPerVolt = 25206;   // ADC gain for 0 to 2.6 volt range.
const int ADC_Offset    = 0;       // ADC offset in counts

// This array of offsets allows for custom calibration
// of each input that uses the mVolts channel. The offset
// will be in the drivers native units.  For the mVolts
// driver it will be in mVolts.  For a temperature driver
// it will be in tenths of degrees, etc.
const int imVolts_Chan_Offset[8] = {0,0,0,0,0,0,0,0};
#pragma end_abs_address

; Generated by PSoC Designer ???
;
;@Id: boot.tpl#101 @
;=====================================================================
=======
;  FILENAME:   boot.asm
;  VERSION:    4.15
;  DATE:       2 August 2004
;
;  DESCRIPTION:
;  M8C Boot Code for CY8C29xxx microcontroller family.
;
;  Copyright (C) Cypress MicroSystems 2000-2004. All rights reserved.
;
; NOTES:
; PSoC Designer's Device Editor uses a template file, BOOT.TPL, located
in
; the project's root directory to create BOOT.ASM. Any changes made to
; BOOT.ASM will be  overwritten every time the project is generated;
therfore
; changes should be made to BOOT.TPL not BOOT.ASM. Care must be taken
when
```

```
; modifying BOOT.TPL so that replacement strings (such as
@PROJECT_NAME)
; are not accidentally modified.
;
;=========================================================================
=======

include ".\lib\GlobalParams.inc"
include "m8c.inc"
include "m8ssc.inc"
include "memory.inc"

;---------------------------------------
; Export Declarations
;---------------------------------------

export __Start
export __bss_start
export __data_start
export __idata_start
export __func_lit_start
export __text_start
export  _bGetPowerSetting
export   bGetPowerSetting


;---------------------------------------
; Optimization flags
;---------------------------------------
;
; To change the value of these flags, modify the file boot.tpl, not
; boot.asm. See the notes in the banner comment at the beginning of
; this file.

; Optimization for Assembly language (only) projects and C-language
projects
; that do not depend on the C compiler to initialize the values of RAM
variables.
;   Set to 1: Support for C Run-time Environment initialization
;   Set to 0: Support for C not included. Faster start up, smaller code
space.
;
C_LANGUAGE_SUPPORT:              equ 1


; The following equate is required for proper operation. Reseting its
value
; is discouraged.  WAIT_FOR_32K is effective only if the crystal
oscillator is
; selected.  If the designer chooses to not wait then stabilization of
the ECO
; and PLL_Lock must take place within user code. See the family data
sheet for
; the requirements of starting the ECO and PLL lock mode.
;
;   Set to 1: Wait for XTAL (& PLL if selected) to stabilize before
;                 invoking main
```

```
;   Set to 0: Boot code does not wait; clock may not have stabilized by
;               the time code in main starts executing.
;
WAIT_FOR_32K:                   equ 1


; For historical reasons, by default the boot code uses an lcall
instruction
; to invoke the user's _main code. If _main executes a return
instruction,
; boot provides an infinite loop. By changing the following equate from
zero
; to 1, boot's lcall will be replaced by a ljmp instruction, saving two
; bytes on the stack which are otherwise required for the return
address. If
; this option is enabled, _main must not return. (Beginning with the
4.2
; release, the C compiler automatically places an infinite loop at the
end
; of main, rather than a return instruction.)
;
ENABLE_LJMP_TO_MAIN:            equ 0


;-----------------------------------------------------------------------
-------
; Interrupt Vector Table
;-----------------------------------------------------------------------
-------
;
; Interrupt vector table entries are 4 bytes long.  Each one contains
; a jump instruction to an ISR (Interrupt Service Routine), although
; very short ISRs could be encoded within the table itself. Normally,
; vector jump targets are modified automatically according to the user
; modules selected. This occurs when the 'Generate Application' opera-
; tion is run causing PSoC Designer to create boot.asm and the other
; configuration files. If you need to hard code a vector, update the
; file boot.tpl, not boot.asm. See the banner comment at the beginning
; of this file.
;-----------------------------------------------------------------------
-------

    AREA TOP (ROM, ABS, CON)

    org   0                       ;Reset Interrupt Vector
    jmp   __Start                 ;First instruction executed
following a Reset

    org   04h                     ;Supply Monitor Interrupt Vector
    halt                          ;Stop execution if power falls too
low

    org   08h                     ;Analog Column 0 Interrupt Vector
    // call void_handler
    reti

    org   0Ch                     ;Analog Column 1 Interrupt Vector
```

```
// call void_handler
reti

org   10h                       ;Analog Column 2 Interrupt Vector
// call void_handler
reti

org   14h                       ;Analog Column 3 Interrupt Vector
// call void_handler
reti

org   18h                       ;VC3 Interrupt Vector
// call void_handler
reti

org   1Ch                       ;GPIO Interrupt Vector
// call void_handler
reti

org   20h                       ;PSoC Block DBB00 Interrupt Vector
// call void_handler
reti

org   24h                       ;PSoC Block DBB01 Interrupt Vector
ljmp    _ADC_ADConversion_ISR
reti

org   28h                       ;PSoC Block DCB02 Interrupt Vector
// call void_handler
reti

org   2Ch                       ;PSoC Block DCB03 Interrupt Vector
// call void_handler
reti

org   30h                       ;PSoC Block DBB10 Interrupt Vector
// call void_handler
reti

org   34h                       ;PSoC Block DBB11 Interrupt Vector
// call void_handler
reti

org   38h                       ;PSoC Block DCB12 Interrupt Vector
// call void_handler
reti

org   3Ch                       ;PSoC Block DCB13 Interrupt Vector
// call void_handler
reti

org   40h                       ;PSoC Block DBB20 Interrupt Vector
// call void_handler
reti

org   44h                       ;PSoC Block DBB21 Interrupt Vector
// call void_handler
```

```
    reti

    org   48h                     ;PSoC Block DCB22 Interrupt Vector
    // call void_handler
    reti

    org   4Ch                     ;PSoC Block DCB23 Interrupt Vector
    // call void_handler
    reti

    org   50h                     ;PSoC Block DBB30 Interrupt Vector
    // call void_handler
    reti

    org   54h                     ;PSoC Block DBB31 Interrupt Vector
    // call void_handler
    reti

    org   58h                     ;PSoC Block DCB32 Interrupt Vector
    // call void_handler
    reti

    org   5Ch                     ;PSoC Block DCB33 Interrupt Vector
    // call void_handler
    reti

    org   60h                     ;PSoC I2C Interrupt Vector
    // call void_handler
    reti

    org   64h                     ;Sleep Timer Interrupt Vector
    ljmp    _SystemTimer_ISR
    reti

;-----------------------------------------------------------------------
-------
;  Start of Execution.
;-----------------------------------------------------------------------
-------
;  The Supervisory ROM SWBootReset function has already completed the
;  calibrate1 process, loading trim values for 5 volt operation.
;
    org 68h
__Start:

    ; initialize SMP values for voltage stabilization, if required,
    ; leaving power-on reset (POR) level at the default (low) level, at
    ; least for now.
    ;
    M8C_SetBank1
    mov   reg[VLT_CR], SWITCH_MODE_PUMP_JUST | LVD_TBEN_JUST |
TRIP_VOLTAGE_JUST
    M8C_SetBank0

IF ( WATCHDOG_ENABLE )            ; WDT selected in Global Params
    M8C_EnableWatchDog
ENDIF
```

```
IF ( SELECT_32K )
    or   reg[CPU_SCR1],  CPU_SCR1_ECO_ALLOWED  ; ECO will be used in
this project
ELSE
    and  reg[CPU_SCR1], ~CPU_SCR1_ECO_ALLOWED  ; Prevent ECO from being
enabled
ENDIF

    ;---------------------------
    ; Set up the Temporary stack
    ;---------------------------
    ; A temporary stack is set up for the SSC instructions.
    ; The real stack start will be assigned later.
    ;
_stack_start:          equ 80h
    mov   A, _stack_start          ; Set top of stack to end of used
RAM
    swap  SP, A                    ; This is only temporary if going to
LMM

    ;-----------------------------------------------
    ; Set Power-related Trim & the AGND Bypass bit.
    ;-----------------------------------------------

IF ( POWER_SETTING & POWER_SET_5V0)            ; *** 5.0 Volt operation
***
 IF ( POWER_SETTING & POWER_SET_SLOW_IMO)      ; *** 6MHZ Main
Oscillator ***
    or  reg[CPU_SCR1], CPU_SCR1_SLIMO
    M8SSC_Set2TableTrims 2, SSCTBL2_TRIM_IMO_5V_6MHZ, 1,
SSCTBL1_TRIM_BGR_5V, AGND_BYPASS_JUST
 ELSE                                          ; *** 12MHZ Main
Oscillator ***
  IF ( AGND_BYPASS )
    ;- - - - - - - - - - - - - - - - - - - - - - - - - - - - - - - - - -
- -
    ; The 5V trim has already been set, but we need to update the
AGNDBYP
    ; bit in the write-only BDG_TR register. Recalculate the register
    ; value using the proper trim values.
    ;- - - - - - - - - - - - - - - - - - - - - - - - - - - - - - - - - -
- -
    M8SSC_SetTableVoltageTrim 1, SSCTBL1_TRIM_BGR_5V, AGND_BYPASS_JUST
  ENDIF
 ENDIF
ENDIF ; 5.0 V Operation

IF ( POWER_SETTING & POWER_SET_3V3)            ; *** 3.3 Volt operation
***
 IF ( POWER_SETTING & POWER_SET_SLOW_IMO)      ; *** 6MHZ Main
Oscillator ***
    or  reg[CPU_SCR1], CPU_SCR1_SLIMO
    M8SSC_Set2TableTrims 2, SSCTBL2_TRIM_IMO_3V_6MHZ, 1,
SSCTBL1_TRIM_BGR_3V, AGND_BYPASS_JUST
 ELSE                                          ; *** 12MHZ Main
Oscillator ***
```

```
    M8SSC_SetTableTrims  1, SSCTBL1_TRIM_IMO_3V_24MHZ,
SSCTBL1_TRIM_BGR_3V, AGND_BYPASS_JUST
 ENDIF
ENDIF ; 3.3 Volt Operation

    mov  [bSSC_KEY1],  0           ; Lock out Flash and Supervisiory
operations
    mov  [bSSC_KEYSP], 0

    ;---------------------------------------
    ; Initialize Crystal Oscillator and PLL
    ;---------------------------------------

IF ( SELECT_32K & WAIT_FOR_32K )
    ; If the user has requested the External Crystal Oscillator (ECO)
then turn it
    ; on and wait for it to stabilize and the system to switch over to
it. The PLL
    ; is left off. Set the SleepTimer period is set to 1 sec to time
the wait for
    ; the ECO to stabilize.
    ;
    M8C_SetBank1
    mov   reg[OSC_CR0], (SELECT_32K_JUST | OSC_CR0_SLEEP_1Hz |
OSC_CR0_CPU_12MHz)
    M8C_SetBank0
    M8C_ClearWDTAndSleep                  ; Reset the sleep timer to
get a full second
    or    reg[INT_MSK0], INT_MSK0_SLEEP   ; Enable latching of
SleepTimer interrupt
    mov   reg[INT_VC],   0                ; Clear all pending
interrupts
.WaitFor1s:
    tst   reg[INT_CLR0], INT_MSK0_SLEEP   ; Test the SleepTimer
Interrupt Status
    jz   .WaitFor1s                       ; Interrupt will latch but
will not dispatch
                                          ;   since interrupts are not
globally enabled
ELSE ; !( SELECT_32K & WAIT_FOR_32K )
    ; Either no ECO, or waiting for stable clock is to be done in main
    M8C_SetBank1
    mov   reg[OSC_CR0], (SELECT_32K_JUST | PLL_MODE_JUST |
SLEEP_TIMER_JUST | OSC_CR0_CPU_12MHz)
    M8C_SetBank0
    M8C_ClearWDTAndSleep           ; Reset the watch dog

ENDIF ;( SELECT_32K & WAIT_FOR_32K )

IF ( PLL_MODE )
    ; Crystal is now fully operational (assuming WAIT_FOR_32K was
enabled).
    ; Now start up PLL if selected, and wait 16 msec for it to
stabilize.
    ;
    M8C_SetBank1
```

```
    mov   reg[OSC_CR0], (SELECT_32K_JUST | PLL_MODE_JUST |
OSC_CR0_SLEEP_64Hz | OSC_CR0_CPU_3MHz)
    M8C_SetBank0
    M8C_ClearWDTAndSleep                  ; Reset the sleep timer to
get full period
    mov   reg[INT_VC], 0                  ; Clear all pending
interrupts

.WaitFor16ms:
    tst   reg[INT_CLR0],INT_MSK0_SLEEP    ; Test the SleepTimer
Interrupt Status
    jz   .WaitFor16ms
    M8C_SetBank1                          ; continue boot at CPU Speed
of SYSCLK/2
    mov   reg[OSC_CR0], (SELECT_32K_JUST | PLL_MODE_JUST |
OSC_CR0_SLEEP_64Hz | OSC_CR0_CPU_12MHz)
    M8C_SetBank0

IF      ( WAIT_FOR_32K )
ELSE ; !( WAIT_FOR_32K )
    ; Option settings (PLL-Yes, ECO-No) are incompatible - force a
syntax error
    ERROR_PSoC Disabling WAIT_FOR_32K requires that the PLL_Lock must
be enabled in user code.
ENDIF ;(WAIT_FOR_32K)
ENDIF ;(PLL_MODE)

    ;------------------------
    ; Close CT leakage path.
    ;------------------------
    mov   reg[ACB00CR0], 05h
    mov   reg[ACB01CR0], 05h
    mov   reg[ACB02CR0], 05h
    mov   reg[ACB03CR0], 05h

    ;---------------------------------------------
    ; Enter the Large Memory Model, if applicable
    ;---------------------------------------------
IF ( SYSTEM_LARGE_MEMORY_MODEL )
    RAM_SETPAGE_STK SYSTEM_STACK_PAGE      ; relocate stack page ...
    mov   A, SYSTEM_STACK_BASE_ADDR        ;   and offset, if any
    swap  A, SP
    RAM_SETPAGE_IDX2STK            ; initialize other page pointers
    RAM_SETPAGE_CUR 0
    RAM_SETPAGE_MVW 0
    RAM_SETPAGE_MVR 0

  IF ( SYSTEM_IDXPG_TRACKS_STK_PP ); Now enable paging:
    or    F, FLAG_PGMODE_11b       ; LMM w/ IndexPage<==>StackPage
  ELSE
    or    F, FLAG_PGMODE_10b       ; LMM w/ independent IndexPage
  ENDIF ;  SYSTEM_IDXPG_TRACKS_STK_PP
ELSE
    mov   A, __ramareas_end        ; Set top of stack to end of used
RAM
    swap  SP, A
ENDIF ;  SYSTEM_LARGE_MEMORY_MODEL
```

```
    ;-------------------------
    ; Load Base Configuration
    ;-------------------------
    ; Load global parameter settings and load the user modules in the
    ; base configuration. Exceptions: (1) Leave CPU Speed fast as
possible
    ; to minimize start up time; (2) We may still need to play with the
    ; Sleep Timer.
    ;
    lcall LoadConfigInit

    ;-----------------------------------
    ; Initialize C Run-Time Environment
    ;-----------------------------------
IF ( C_LANGUAGE_SUPPORT )
IF ( SYSTEM_SMALL_MEMORY_MODEL )
    mov  A,0                          ; clear the 'bss' segment to
zero
    mov  [__r0],<__bss_start
BssLoop:
    cmp  [__r0],<__bss_end
    jz   BssDone
    mvi  [__r0],A
    jmp  BssLoop
BssDone:
    mov  A,>__idata_start             ; copy idata to data segment
    mov  X,<__idata_start
    mov  [__r0],<__data_start
IDataLoop:
    cmp  [__r0],<__data_end
    jz   C_RTE_Done
    push A
    romx
    mvi  [__r0],A
    pop  A
    inc  X
    adc  A,0
    jmp  IDataLoop

ENDIF ; SYSTEM_SMALL_MEMORY_MODEL

IF ( SYSTEM_LARGE_MEMORY_MODEL )
    mov   reg[CUR_PP], >__r0          ; force direct addr mode
instructions
                                      ; to use the Virtual Register
page.

    ; Dereference the constant (flash) pointer pXIData to access the
start
    ; of the extended idata area, "xidata." Xidata follows the end of
the
    ; text segment and may have been relocated by the Code Compressor.
    ;
    mov   A, >__pXIData               ; Get the address of the flash
    mov   X, <__pXIData               ;   pointer to the xidata area.
    push  A
```

```
    romx                                ; get the MSB of xidata's
address
    mov   [__r0], A
    pop   A
    inc   X
    adc   A, 0
    romx                                ; get the LSB of xidata's
address
    swap  A, X
    mov   A, [__r0]                     ; pXIData (in [A,X]) points to
the
                                        ;   XIData structure list in
flash
    jmp   .AccessStruct

    ; Unpack one element in the xidata "structure list" that specifies
the
    ; values of C variables. Each structure contains 3 member elements.
    ; The first is a pointer to a contiguous block of RAM to be
initial-
    ; ized. Blocks are always 255 bytes or less in length and never
cross
    ; RAM page boundaries. The list terminates when the MSB of the
pointer
    ; contains 0xFF. There are two formats for the struct depending on
the
    ; value in the second member element, an unsigned byte:
    ; (1) If the value of the second element is non-zero, it represents
    ; the 'size' of the block of RAM to be initialized. In this case,
the
    ; third member of the struct is an array of bytes of length 'size'
and
    ; the bytes are copied to the block of RAM.
    ; (2) If the value of the second element is zero, the block of RAM
is
    ; to be cleared to zero. In this case, the third member of the
struct
    ; is an unsigned byte containing the number of bytes to clear.

.AccessNextStructLoop:
    inc   X                             ; pXIData++
    adc   A, 0
.AccessStruct:                          ; Entry point for first block
    ;
    ; Assert: pXIData in [A,X] points to the beginning of an XIData
struct.
    ;
    M8C_ClearWDT                        ; Clear the watchdog for long
inits
    push  A
    romx                                ; MSB of RAM addr (CPU.A <-
*pXIData)
    mov   reg[MVW_PP], A                ;   for use with MVI write
operations
    inc   A                             ; End of Struct List?
(MSB==0xFF?)
```

```
    jz    .C_RTE_WrapUp                ;   Yes, C runtime environment
complete
    pop   A                            ; restore pXIData to [A,X]
    inc   X                            ; pXIData++
    adc   A, 0
    push  A
    romx                               ; LSB of RAM addr (CPU.A <-
*pXIData)
    mov   [__r0], A                    ; RAM Addr now in
[reg[MVW_PP],[__r0]]
    pop   A                            ; restore pXIData to [A,X]
    inc   X                            ; pXIData++ (point to size)
    adc   A, 0
    push  A
    romx                               ; Get the size (CPU.A <-
*pXIData)
    jz    .ClearRAMBlockToZero         ; If Size==0, then go clear RAM
    mov   [__r1], A                    ;             else downcount in
__r1
    pop   A                            ; restore pXIData to [A,X]

.CopyNextByteLoop:
    ; For each byte in the structure's array member, copy from flash to
RAM.
    ; Assert: pXIData in [A,X] points to previous byte of flash source;
    ;         [reg[MVW_PP],[__r0]] points to next RAM destination;
    ;         __r1 holds a non-zero count of the number of bytes
remaining.
    ;
    inc   X                            ; pXIData++ (point to next data
byte)
    adc   A, 0
    push  A
    romx                               ; Get the data value (CPU.A <-
*pXIData)
    mvi   [__r0], A                    ; Transfer the data to RAM
    tst   [__r0], 0xff                 ; Check for page crossing
    jnz   .CopyLoopTail                ;   No crossing, keep going
    mov   A, reg[ MVW_PP]              ;   If crossing, bump MVW page
reg
    inc   A
    mov   reg[ MVW_PP], A
.CopyLoopTail:
    pop   A                            ; restore pXIData to [A,X]
    dec   [__r1]                       ; End of this array in flash?
    jnz   .CopyNextByteLoop            ;   No,  more bytes to copy
    jmp   .AccessNextStructLoop        ;   Yes, initialize another RAM
block

.ClearRAMBlockToZero:
    pop   A                            ; restore pXIData to [A,X]
    inc   X                            ; pXIData++ (point to next data
byte)
    adc   A, 0
    push  A
    romx                               ; Get the run length (CPU.A <-
*pXIData)
```

```
    mov   [__r1], A                    ; Initialize downcounter
    mov   A, 0                         ; Initialize source data

.ClearRAMBlockLoop:
    ; Assert: [reg[MVW_PP],[__r0]] points to next RAM destination and
    ;         __r1 holds a non-zero count of the number of bytes
remaining.
    ;
    mvi   [__r0], A                    ; Clear a byte
    tst   [__r0], 0xff                 ; Check for page crossing
    jnz   .ClearLoopTail               ;   No crossing, keep going
    mov   A, reg[ MVW_PP]              ;   If crossing, bump MVW page
reg
    inc   A
    mov   reg[ MVW_PP], A
    mov   A, 0                         ; Restore the zero used for
clearing
.ClearLoopTail:
    dec   [__r1]                       ; Was this the last byte?
    jnz   .ClearRAMBlockLoop           ;   No,  continue
    pop   A                            ;   Yes, restore pXIData to
[A,X] and
    jmp   .AccessNextStructLoop        ;        initialize another RAM
block

.C_RTE_WrapUp:
    pop   A                            ; balance stack

ENDIF ; SYSTEM_LARGE_MEMORY_MODEL

C_RTE_Done:

ENDIF ; C_LANGUAGE_SUPPORT

    ;-------------------------------
    ; Voltage Stabilization for SMP
    ;-------------------------------

IF ( POWER_SETTING & POWER_SET_5V0)    ; 5.0V Operation
IF ( SWITCH_MODE_PUMP ^ 1 )            ; SMP is operational
    ;- - - - - - - - - - - - - - - - - - - - - - - - - - - - - - - - - -
- -
    ; When using the SMP at 5V, we must wait for Vdd to slew from 3.1V
to
    ; 5V before enabling the Precision Power-On Reset (PPOR).
    ;- - - - - - - - - - - - - - - - - - - - - - - - - - - - - - - - - -
- -
    or   reg[INT_MSK0],INT_MSK0_SLEEP
    M8C_SetBank1
    and   reg[OSC_CR0], ~OSC_CR0_SLEEP
    or    reg[OSC_CR0],  OSC_CR0_SLEEP_512Hz
    M8C_SetBank0
    M8C_ClearWDTAndSleep                   ; Restart the sleep timer
    mov   reg[INT_VC], 0                   ; Clear all pending
interrupts
.WaitFor2ms:
```

```
    tst   reg[INT_CLR0], INT_MSK0_SLEEP    ; Test the SleepTimer
Interrupt Status
    jz   .WaitFor2ms                       ; Branch fails when 2 msec
has passed
ENDIF ; SMP is operational
ENDIF ; 5.0V Operation

    ;-------------------------------
    ; Set Power-On Reset (POR) Level
    ;-------------------------------
    M8C_SetBank1

IF (POWER_SETTING & POWER_SET_5V0)          ; 5.0V Operation?
 IF (POWER_SETTING & POWER_SET_SLOW_IMO)    ; and Slow Mode?
 ELSE                                       ;    No, fast mode
  IF ( CPU_CLOCK_JUST ^ OSC_CR0_CPU_24MHz ) ;    As fast as 24MHz?
                                            ;       no, set midpoint
POR in user code, if desired
  ELSE ; 24HMz                              ;
    or    reg[VLT_CR],  VLT_CR_POR_HIGH     ;      yes, highest POR
trip point required
  ENDIF ; 24MHz
 ENDIF ; Slow Mode
ENDIF ; 5.0V Operation

    M8C_SetBank0

    ;----------------------------
    ; Wrap up and invoke "main"
    ;----------------------------

    ; Disable the Sleep interrupt that was used for timing above.  In
fact,
    ; no interrupts should be enabled now, so may as well clear the
register.
    ;
    mov  reg[INT_MSK0],0

    ; Everything has started OK. Now select requested CPU & sleep
frequency.
    ;
    M8C_SetBank1
    mov  reg[OSC_CR0],(SELECT_32K_JUST | PLL_MODE_JUST |
SLEEP_TIMER_JUST | CPU_CLOCK_JUST)
    M8C_SetBank0

    ; Global Interrupt are NOT enabled, this should be done in main().
    ; LVD is set but will not occur unless Global Interrupts are
enabled.
    ; Global Interrupts should be enabled as soon as possible in
main().
    ;
    mov  reg[INT_VC],0             ; Clear any pending interrupts which
may
                                   ; have been set during the boot
process.
IF ENABLE_LJMP_TO_MAIN
```

```
    ljmp  _main                     ; goto main (no return)
ELSE
    lcall _main                     ; call main
.Exit:
    jmp  .Exit                      ; Wait here after return till power-
off or reset
ENDIF

    ;---------------------------------
    ; Library Access to Global Parms
    ;---------------------------------
    ;
 bGetPowerSetting:
_bGetPowerSetting:
    ; Returns value of POWER_SETTING in the A register.
    ; No inputs. No Side Effects.
    ;
    mov   A, POWER_SETTING
    ret

    ;---------------------------------
    ; Order Critical RAM & ROM AREAs
    ;---------------------------------
    ;  'TOP' is all that has been defined so far...

    ;  ROM AREAs for C CONST, static & global items
    ;
    AREA lit               (ROM, REL, CON)   ; 'const' definitions
    AREA idata             (ROM, REL, CON)   ; Constants for
initializing RAM
__idata_start:

    AREA func_lit          (ROM, REL, CON)   ; Function Pointers
__func_lit_start:

IF ( SYSTEM_LARGE_MEMORY_MODEL )
    ; We use the func_lit area to store a pointer to extended
initialized
    ; data (xidata) area that follows the text area. Func_lit isn't
    ; relocated by the code compressor, but the text area may shrink
and
    ; that moves xidata around.
    ;
__pXIData:         word __text_end           ; ptr to extended idata
ENDIF

    AREA psoc_config       (ROM, REL, CON)   ; Configuration Load &
Unload
    AREA UserModules       (ROM, REL, CON)   ; User Module APIs

    ; CODE segment for general use
    ;
    AREA text (ROM, REL, CON)
__text_start:

    ; RAM area usage
    ;
```

```
    AREA data               (RAM, REL, CON)   ; initialized RAM
__data_start:

    AREA virtual_registers (RAM, REL, CON)   ; Temp vars of C compiler
    AREA InterruptRAM      (RAM, REL, CON)   ; Interrupts, on Page 0
    AREA bss                (RAM, REL, CON)   ; general use
__bss_start:

; end of file boot.asm
```

APPENDIX C

Actual Photos

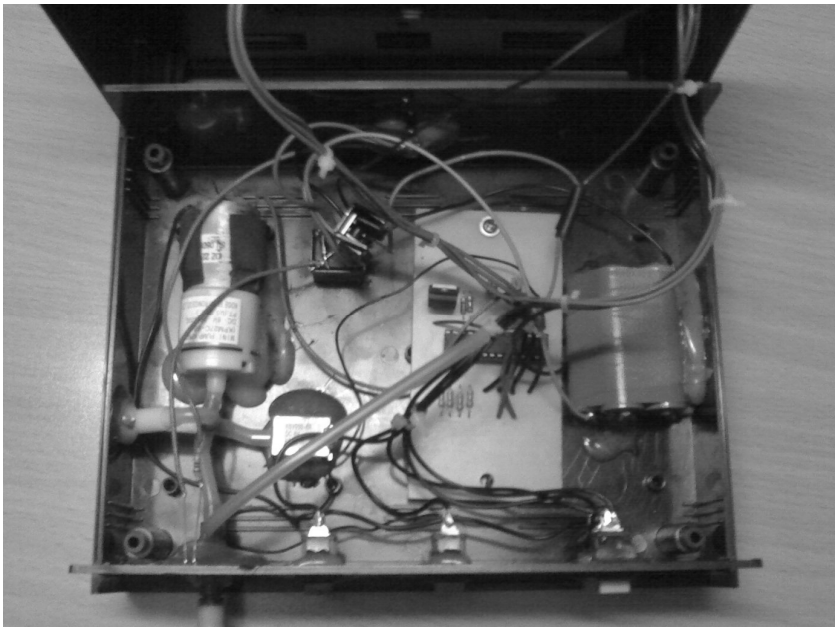

Figure 6.4 Internal View of the Prototype

Figure 6.5 Top View of the Prototype

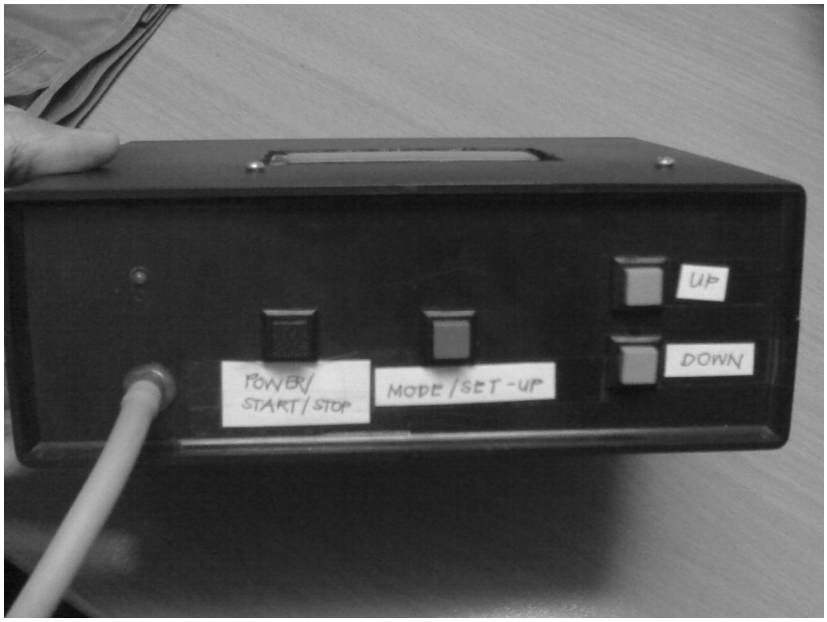

Figure 6.6 Front View of the Prototype

Figure 6.7 Back View of the Prototype

APPENDIX D

28Pin CY8C29466 Datasheet

PSoC® Mixed-Signal Array — Final Data Sheet

CY8C29466, CY8C29566, CY8C29666, and CY8C29866

Features

- **Powerful Harvard Architecture Processor**
  - M8C Processor Speeds to 24 MHz
  - Two 8x8 Multiply, 32-Bit Accumulate
  - Low Power at High Speed
  - 3.0V to 5.25V Operating Voltage
  - Operating Voltages Down to 1.0V Using On-Chip Switch Mode Pump (SMP)
  - Industrial Temperature Range: -40°C to +85°C
- **Advanced Peripherals (PSoC Blocks)**
  - 12 Rail-to-Rail Analog PSoC Blocks Provide:
    - Up to 14-Bit ADCs
    - Up to 9-Bit DACs
    - Programmable Gain Amplifiers
    - Programmable Filters and Comparators
  - 16 Digital PSoC Blocks Provide:
    - 8- to 32-Bit Timers, Counters, and PWMs
    - CRC and PRS Modules
    - Up to 4 Full-Duplex UARTs
    - Multiple SPI™ Masters or Slaves
    - Connectable to all GPIO Pins
  - Complex Peripherals by Combining Blocks
- **Precision, Programmable Clocking**
  - Internal ±2.5% 24/48 MHz Oscillator
  - 24/48 MHz with Optional 32.768 kHz Crystal
  - Optional External Oscillator, up to 24 MHz
  - Internal Oscillator for Watchdog and Sleep
- **Flexible On-Chip Memory**
  - 32K Bytes Flash Program Storage 50,000 Erase/Write Cycles
  - 2K Bytes SRAM Data Storage
  - In-System Serial Programming (ISSP)
  - Partial Flash Updates
  - Flexible Protection Modes
  - EEPROM Emulation in Flash
- **Programmable Pin Configurations**
  - 25 mA Sink on all GPIO
  - Pull up, Pull down, High Z, Strong, or Open Drain Drive Modes on all GPIO
  - Up to 12 Analog Inputs on GPIO
  - Four 40 mA Analog Outputs on GPIO
  - Configurable Interrupt on all GPIO
- **Additional System Resources**
  - I²C™ Slave, Master, and Multi-Master to 400 kHz
  - Watchdog and Sleep Timers
  - User-Configurable Low Voltage Detection
  - Integrated Supervisory Circuit
  - On-Chip Precision Voltage Reference
- **Complete Development Tools**
  - Free Development Software (PSoC Designer™)
  - Full-Featured, In-Circuit Emulator and Programmer
  - Full Speed Emulation
  - Complex Breakpoint Structure
  - 128K Bytes Trace Memory
  - Complex Events
  - C Compilers, Assembler, and Linker

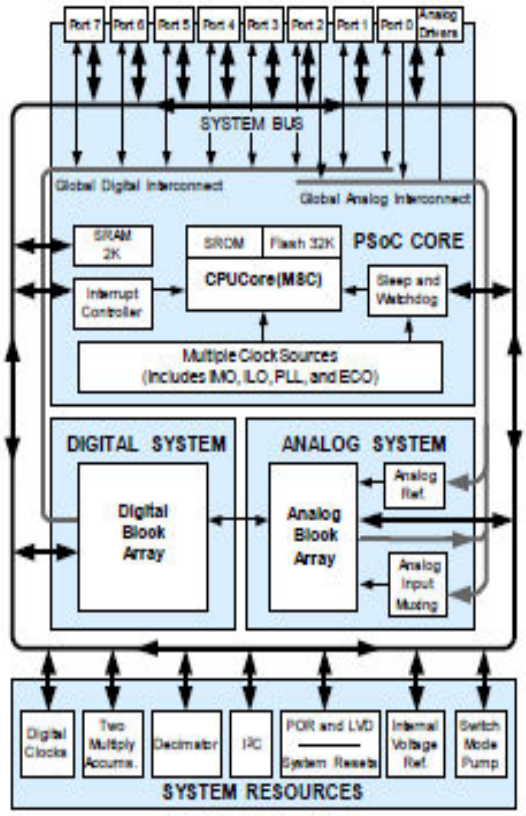

PSoC® Functional Overview

The PSoC® family consists of many *Mixed-Signal Array with On-Chip Controller* devices. These devices are designed to replace multiple traditional MCU-based system components with one, low cost single-chip programmable device. PSoC devices include configurable blocks of analog and digital logic, as well as programmable interconnects. This architecture allows the user to create customized peripheral configurations that match the requirements of each individual application. Additionally, a fast CPU, Flash program memory, SRAM data memory, and configurable IO are included in a range of convenient pinouts and packages.

The PSoC architecture, as illustrated on the left, is comprised of four main areas: PSoC Core, Digital System, Analog System, and System Resources. Configurable global busing allows all the device resources to be combined into a complete custom system. The PSoC CY8C29x66 family can have up to eight IO ports that connect to the global digital and analog interconnects, providing access to 16 digital blocks and 12 analog blocks.

The PSoC Core

The PSoC Core is a powerful engine that supports a rich feature set. The core includes a CPU, memory, clocks, and configurable GPIO (General Purpose IO).

The M8C CPU core is a powerful processor with speeds up to 24 MHz, providing a four MIPS 8-bit Harvard architecture microprocessor. The CPU utilizes an interrupt controller with 25 vec-

tors, to simplify programming of real time embedded events. Program execution is timed and protected using the included Sleep and Watch Dog Timers (WDT).

Memory encompasses 32 KB of Flash for program storage, 2 KB of SRAM for data storage, and up to 2 KB of EEPROM emulated using the Flash. Program Flash utilizes four protection levels on blocks of 64 bytes, allowing customized software IP protection.

The PSoC device incorporates flexible internal clock generators, including a 24 MHz IMO (internal main oscillator) accurate to 2.5% over temperature and voltage. The 24 MHz IMO can also be doubled to 48 MHz for use by the digital system. A low power 32 kHz ILO (internal low speed oscillator) is provided for the Sleep timer and WDT. If crystal accuracy is desired, the ECO (32.768 kHz external crystal oscillator) is available for use as a Real Time Clock (RTC) and can optionally generate a crystal-accurate 24 MHz system clock using a PLL. The clocks, together with programmable clock dividers (as a System Resource), provide the flexibility to integrate almost any timing requirement into the PSoC device.

PSoC GPIOs provide connection to the CPU, digital and analog resources of the device. Each pin's drive mode may be selected from eight options, allowing great flexibility in external interfacing. Every pin also has the capability to generate a system interrupt on high level, low level, and change from last read.

The Digital System

The Digital System is composed of 16 digital PSoC blocks. Each block is an 8-bit resource that can be used alone or combined with other blocks to form 8, 16, 24, and 32-bit peripherals, which are called user module references. Digital peripheral configurations include those listed below.

- PWMs (8 to 32 bit)
- PWMs with Dead band (8 to 32 bit)
- Counters (8 to 32 bit)
- Timers (8 to 32 bit)
- UART 8 bit with selectable parity (up to 4)
- SPI master and slave (up to 4 each)
- I2C slave and multi-master (1 available as a System Resource)
- Cyclical Redundancy Checker/Generator (8 to 32 bit)
- IrDA (up to 4)
- Pseudo Random Sequence Generators (8 to 32 bit)

The digital blocks can be connected to any GPIO through a series of global buses that can route any signal to any pin. The buses also allow for signal multiplexing and for performing logic operations. This configurability frees your designs from the constraints of a fixed peripheral controller.

Digital blocks are provided in rows of four, where the number of blocks varies by PSoC device family. This allows you the optimum choice of system resources for your application. Family resources are shown in the table titled PSoC Device Characteristics on page 3.

Digital System Block Diagram

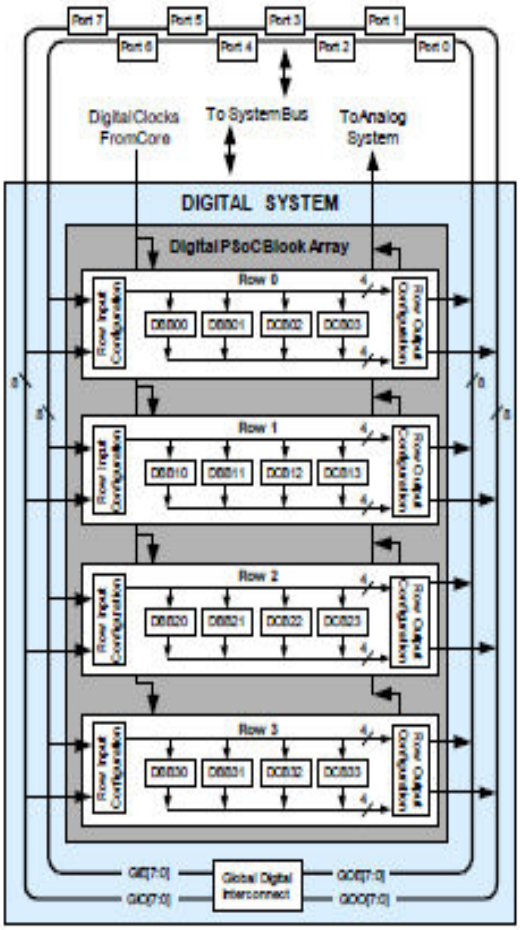

The Analog System

The Analog System is composed of 12 configurable blocks, each comprised of an opamp circuit allowing the creation of complex analog signal flows. Analog peripherals are very flexible and can be customized to support specific application requirements. Some of the more common PSoC analog functions (most available as user modules) are listed below.

- Analog-to-digital converters (up to 4, with 6- to 14-bit resolution, selectable as Incremental, Delta Sigma, and SAR)
- Filters (2, 4, 6, or 8 pole band-pass, low-pass, and notch)
- Amplifiers (up to 4, with selectable gain to 48x)
- Instrumentation amplifiers (up to 2, with selectable gain to 93x)
- Comparators (up to 4, with 16 selectable thresholds)
- DACs (up to 4, with 6- to 9-bit resolution)
- Multiplying DACs (up to 4, with 6- to 9-bit resolution)
- High current output drivers (four with 40 mA drive as a Core Resource)
- 1.3V reference (as a System Resource)

- DTMF Dialer
- Modulators
- Correlators
- Peak Detectors
- Many other topologies possible

Analog blocks are provided in columns of three, which includes one CT (Continuous Time) and two SC (Switched Capacitor) blocks, as shown in the figure below.

Analog System Block Diagram

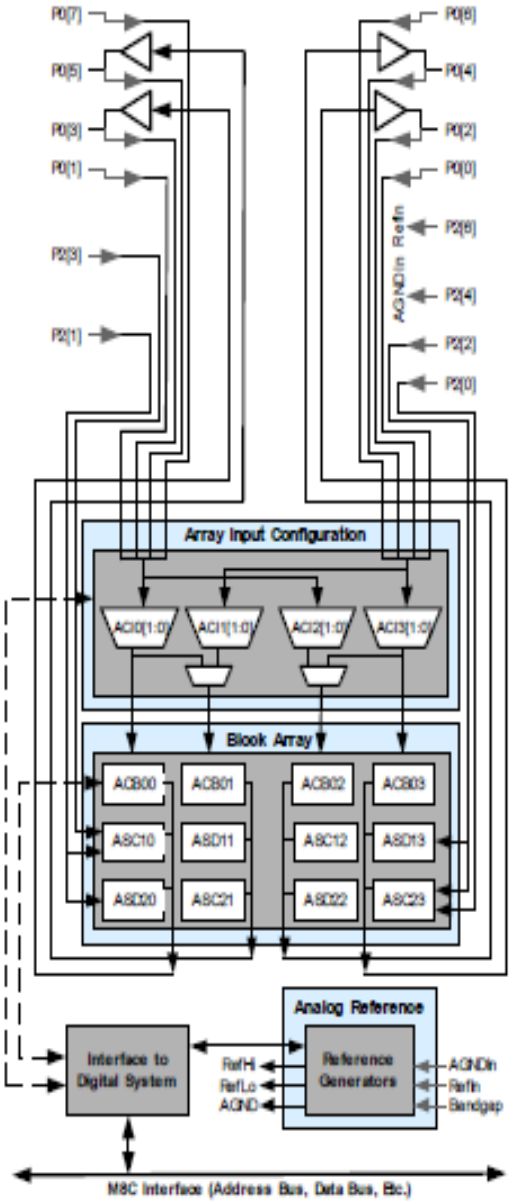

Additional System Resources

System Resources, some of which have been previously listed, provide additional capability useful to complete systems. Resources include a multiplier, decimator, switch mode pump, low voltage detection, and power on reset. Statements describing the merits of each system resource are presented below.

- Digital clock dividers provide three customizable clock frequencies for use in applications. The clocks can be routed to both the digital and analog systems. Additional clocks can be generated using digital PSoC blocks as clock dividers.
- Multiply accumulate (MAC) provides fast 8-bit multiplier with 32-bit accumulate, to assist in general math and digital filters.
- The decimator provides a custom hardware filter for digital signal, processing applications including the creation of Delta Sigma ADCs.
- The I2C module provides 100 and 400 kHz communication over two wires. Slave, master, and multi-master modes are all supported.
- Low Voltage Detection (LVD) interrupts can signal the application of falling voltage levels, while the advanced POR (Power On Reset) circuit eliminates the need for a system supervisor.
- An internal 1.3 voltage reference provides an absolute reference for the analog system, including ADCs and DACs.
- An integrated switch mode pump (SMP) generates normal operating voltages from a single 1.2V battery cell, providing a low cost boost converter.

PSoC Device Characteristics

Depending on your PSoC device characteristics, the digital and analog systems can have 16, 8, or 4 digital blocks and 12, 6, or 4 analog blocks. The following table lists the resources available for specific PSoC device groups. The PSoC device covered by this data sheet is highlighted below.

PSoC Device Characteristics

PSoC Part Number	Digital IO	Digital Rows	Digital Blocks	Analog Inputs	Analog Outputs	Analog Columns	Analog Blocks	SRAM Size	Flash Size
CY8C28x88	**up to 84**	**4**	**16**	**12**	**4**	**4**	**12**	**2K**	**32K**
CY8C27x43	up to 44	2	8	12	4	4	12	256 Bytes	16K
CY8C24x94	56	1	4	48	2	2	6	1K	16K
CY8C24x23A	up to 24	1	4	12	2	2	6	256 Bytes	4K
CY8C21x34	up to 28	1	4	28	0	2	4[a]	512 Bytes	8K
CY8C21x23	16	1	4	8	0	2	4[a]	256 Bytes	4K
CY8C20x34	up to 28	0	0	28	0	0	3[b]	512 Bytes	8K

a. Limited analog functionality.
b. Two analog blocks and one CapSense.

Getting Started

The quickest path to understanding the PSoC silicon is by reading this data sheet and using the PSoC Designer Integrated Development Environment (IDE). This data sheet is an overview of the PSoC integrated circuit and presents specific pin, register, and electrical specifications. For in-depth information, along with detailed programming information, reference the *PSoC Mixed-Signal Array Technical Reference Manual*.

For up-to-date Ordering, Packaging, and Electrical Specification information, reference the latest PSoC device data sheets on the web at http://www.cypress.com/psoc.

Development Kits

Development Kits are available from the following distributors: Digi-Key, Avnet, Arrow, and Future. The Cypress Online Store at http://www.onfulfillment.com/cypressstore/ contains development kits, C compilers, and all accessories for PSoC development. Click on *PSoC (Programmable System-on-Chip)* to view a current list of available items.

Technical Training Modules

Free PSoC technical training modules are available for users new to PSoC. Training modules cover designing, debugging, advanced analog and CapSense. Go to http://www.cypress.com/techtrain.

Consultants

Certified PSoC Consultants offer everything from technical assistance to completed PSoC designs. To contact or become a PSoC Consultant, go to the following Cypress support web site: http://www.cypress.com/support/cypros.cfm.

Technical Support

PSoC application engineers take pride in fast and accurate response. They can be reached with a 4-hour guaranteed response at http://www.cypress.com/support/login.cfm.

Application Notes

A long list of application notes will assist you in every aspect of your design effort. To view the PSoC application notes, go to the http://www.cypress.com web site and select Application Notes under the Design Resources list located in the center of the web page. Application notes are listed by date by default.

Development Tools

PSoC Designer is a Microsoft® Windows-based, integrated development environment for the Programmable System-on-Chip (PSoC) devices. The PSoC Designer IDE and application runs on Windows NT 4.0, Windows 2000, Windows Millennium (Me), or Windows XP. (Reference the PSoC Designer Functional Flow diagram below.)

PSoC Designer helps the customer to select an operating configuration for the PSoC, write application code that uses the PSoC, and debug the application. This system provides design database management by project, an integrated debugger with In-Circuit Emulator, in-system programming support, and the CYASM macro assembler for the CPUs.

PSoC Designer also supports a high-level C language compiler developed specifically for the devices in the family.

PSoC Designer Subsystems

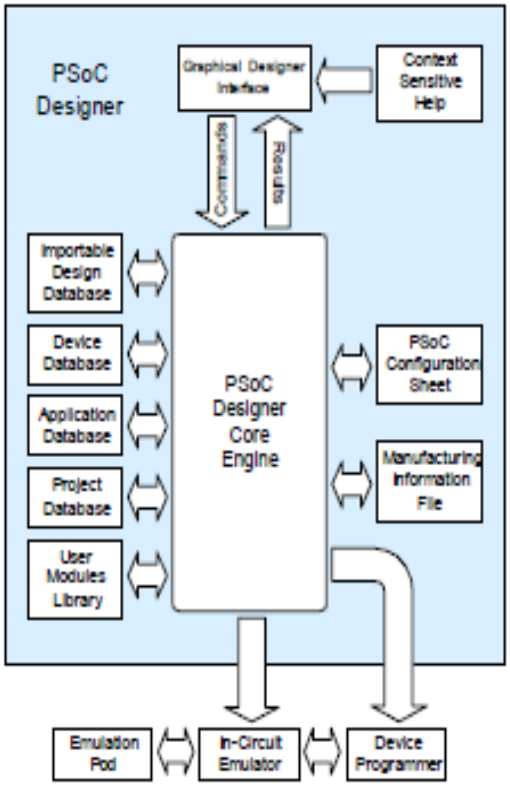

PSoC Designer Software Subsystems

Device Editor

The Device Editor subsystem allows the user to select different onboard analog and digital components called user modules using the PSoC blocks. Examples of user modules are ADCs, DACs, Amplifiers, and Filters.

The device editor also supports easy development of multiple configurations and dynamic reconfiguration. Dynamic configuration allows for changing configurations at run time.

PSoC Designer sets up power-on initialization tables for selected PSoC block configurations and creates source code for an application framework. The framework contains software to operate the selected components and, if the project uses more than one operating configuration, contains routines to switch between different sets of PSoC block configurations at run time. PSoC Designer can print out a configuration sheet for a given project configuration for use during application programming in conjunction with the Device Data Sheet. Once the framework is generated, the user can add application-specific code to flesh out the framework. It's also possible to change the selected components and regenerate the framework.

Design Browser

The Design Browser allows users to select and import preconfigured designs into the user's project. Users can easily browse a catalog of preconfigured designs to facilitate time-to-design. Examples provided in the tools include a 300-baud modem, LIN Bus master and slave, fan controller, and magnetic card reader.

Application Editor

In the Application Editor you can edit your C language and Assembly language source code. You can also assemble, compile, link, and build.

Assembler. The macro assembler allows the assembly code to be merged seamlessly with C code. The link libraries automatically use absolute addressing or can be compiled in relative mode, and linked with other software modules to get absolute addressing.

C Language Compiler. A C language compiler is available that supports Cypress' PSoC family devices. Even if you have never worked in the C language before, the product quickly allows you to create complete C programs for the PSoC family devices.

The embedded, optimizing C compiler provides all the features of C tailored to the PSoC architecture. It comes complete with embedded libraries providing port and bus operations, standard keypad and display support, and extended math functionality.

Debugger

The PSoC Designer Debugger subsystem provides hardware in-circuit emulation, allowing the designer to test the program in a physical system while providing an internal view of the PSoC device. Debugger commands allow the designer to read and program and read and write data memory, read and write IO registers, read and write CPU registers, set and clear breakpoints, and provide program run, halt, and step control. The debugger also allows the designer to create a trace buffer of registers and memory locations of interest.

Online Help System

The online help system displays online, context-sensitive help for the user. Designed for procedural and quick reference, each functional subsystem has its own context-sensitive help. This system also provides tutorials and links to FAQs and an Online Support Forum to aid the designer in getting started.

Hardware Tools

In-Circuit Emulator

A low cost, high functionality ICE (In-Circuit Emulator) is available for development support. This hardware has the capability to program single devices.

The emulator consists of a base unit that connects to the PC by way of the USB port. The base unit is universal and will operate with all PSoC devices. Emulation pods for each device family are available separately. The emulation pod takes the place of the PSoC device in the target board and performs full speed (24 MHz) operation.

Designing with User Modules

The development process for the PSoC device differs from that of a traditional fixed function microprocessor. The configurable analog and digital hardware blocks give the PSoC architecture a unique flexibility that pays dividends in managing specification change during development and by lowering inventory costs. These configurable resources, called PSoC Blocks, have the ability to implement a wide variety of user-selectable functions. Each block has several registers that determine its function and connectivity to other blocks, multiplexers, buses, and to the IO pins. Iterative development cycles permit you to adapt the hardware as well as the software. This substantially lowers the risk of having to select a different part to meet the final design requirements.

To speed the development process, the PSoC Designer Integrated Development Environment (IDE) provides a library of pre-built, pre-tested hardware peripheral functions, called "User Modules." User modules make selecting and implementing peripheral devices simple, and come in analog, digital, and mixed signal varieties. The standard User Module library contains over 50 common peripherals such as ADCs, DACs Timers, Counters, UARTs, and other not-so common peripherals such as DTMF Generators and Bi-Quad analog filter sections.

Each user module establishes the basic register settings that implement the selected function. It also provides parameters that allow you to tailor its precise configuration to your particular application. For example, a Pulse Width Modulator User Module configures one or more digital PSoC blocks, one for each 8 bits of resolution. The user module parameters permit you to establish the pulse width and duty cycle. User modules also provide tested software to cut your development time. The user module application programming interface (API) provides high-level functions to control and respond to hardware events at run-time. The API also provides optional interrupt service routines that you can adapt as needed.

The API functions are documented in user module data sheets that are viewed directly in the PSoC Designer IDE. These data sheets explain the internal operation of the user module and provide performance specifications. Each data sheet describes the use of each user module parameter and documents the setting of each register controlled by the user module.

The development process starts when you open a new project and bring up the Device Editor, a graphical user interface (GUI) for configuring the hardware. You pick the user modules you need for your project and map them onto the PSoC blocks with point-and-click simplicity. Next, you build signal chains by interconnecting user modules to each other and the IO pins. At this stage, you also configure the clock source connections and enter parameter values directly or by selecting values from drop-down menus. When you are ready to test the hardware configuration or move on to developing code for the project, you perform the "Generate Application" step. This causes PSoC Designer to generate source code that automatically configures the device to your specification and provides the high-level user module API functions.

User Module and Source Code Development Flows

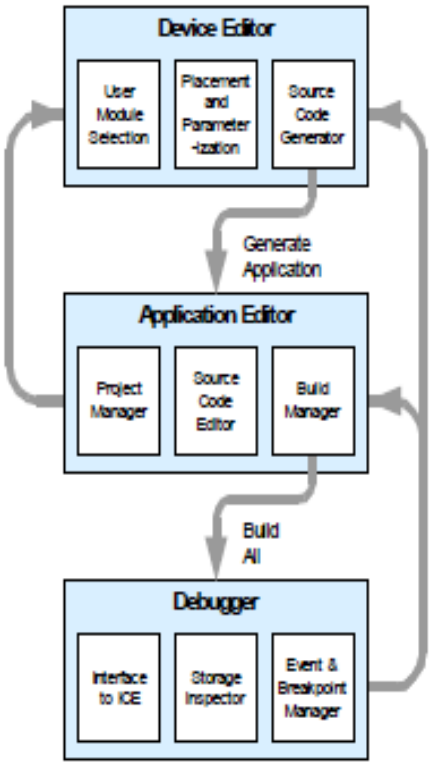

The next step is to write your main program, and any sub-routines using PSoC Designer's Application Editor subsystem. The Application Editor includes a Project Manager that allows you to open the project source code files (including all generated code files) from a hierarchal view. The source code editor provides syntax coloring and advanced edit features for both C and assembly language. File search capabilities include simple string searches and recursive "grep-style" patterns. A single mouse click invokes the Build Manager. It employs a professional-strength "makefile" system to automatically analyze all file dependencies and run the compiler and assembler as necessary. Project-level options control optimization strategies used by the compiler and linker. Syntax errors are displayed in a console window. Double clicking the error message takes you directly to the offending line of source code. When all is correct, the linker builds a HEX file image suitable for programming.

The last step in the development process takes place inside the PSoC Designer's Debugger subsystem. The Debugger downloads the HEX image to the In-Circuit Emulator (ICE) where it runs at full speed. Debugger capabilities rival those of systems costing many times more. In addition to traditional single-step, run-to-breakpoint and watch-variable features, the Debugger provides a large trace buffer and allows you define complex breakpoint events that include monitoring address and data bus values, memory locations and external signals.

1. Pin Information

This chapter describes, lists, and illustrates the CY8C29x66 PSoC device pins and pinout configurations.

1.1 Pinouts

The CY8C29x66 PSoC device is available in a variety of packages which are listed and illustrated in the following tables. Every port pin (labeled with a "P") is capable of Digital IO. However, Vss, Vdd, SMP, and XRES are not capable of Digital IO.

1.1.1 28-Pin Part Pinout

Table 1-1. 28-Pin Part Pinout (PDIP, SSOP, SOIC)

Pin No.	Type		Pin Name	Description
	Digital	Analog		
1	IO	I	P0[7]	Analog column mux input.
2	IO	IO	P0[5]	Analog column mux input and column output.
3	IO	IO	P0[3]	Analog column mux input and column output.
4	IO	I	P0[1]	Analog column mux input.
5	IO		P2[7]	
6	IO		P2[5]	
7	IO	I	P2[3]	Direct switched capacitor block input.
8	IO	I	P2[1]	Direct switched capacitor block input.
9	Power		SMP	Switch Mode Pump (SMP) connection to external components required.
10	IO		P1[7]	I2C Serial Clock (SCL).
11	IO		P1[5]	I2C Serial Data (SDA).
12	IO		P1[3]	
13	IO		P1[1]	Crystal (XTALin), I2C Serial Clock (SCL), ISSP-SCLK*.
14	Power		Vss	Ground connection.
15	IO		P1[0]	Crystal (XTALout), I2C Serial Data (SDA), ISSP-SDATA*.
16	IO		P1[2]	
17	IO		P1[4]	Optional External Clock Input (EXTCLK).
18	IO		P1[6]	
19	Input		XRES	Active high external reset with internal pull down.
20	IO	I	P2[0]	Direct switched capacitor block input.
21	IO	I	P2[2]	Direct switched capacitor block input.
22	IO		P2[4]	External Analog Ground (AGND).
23	IO		P2[6]	External Voltage Reference (VREF).
24	IO	I	P0[0]	Analog column mux input.
25	IO	IO	P0[2]	Analog column mux input and column output.
26	IO	IO	P0[4]	Analog column mux input and column output.
27	IO	I	P0[6]	Analog column mux input.
28	Power		Vdd	Supply voltage.

LEGEND: A = Analog, I = Input, and O = Output.
* These are the ISSP pins, which are not High Z at POR (Power On Reset). See the *PSoC Mixed-Signal Array Technical Reference Manual* for details.

CY8C29466 28-Pin PSoC Device

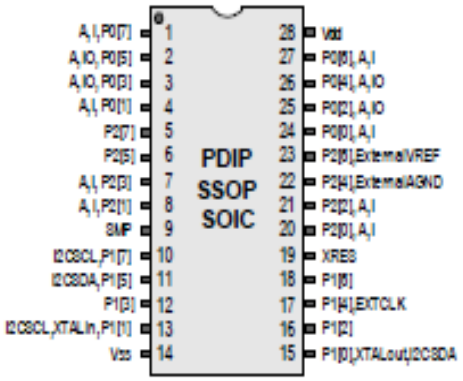

APPENDIX E

LM324 Datasheet

LM124, LM124A, LM224, LM224A
LM324, LM324A, LM2902
QUADRUPLE OPERATIONAL AMPLIFIERS

SLOS066H – SEPTEMBER 1975 – REVISED OCTOBER 2002

- Wide Range of Supply Voltages:
  Single Supply . . . 3 V to 30 V
  (LM2902, 3 V to 26 V) or Dual Supplies
- Low Supply-Current Drain Independent of Supply Voltage . . . 0.8 mA Typ
- Common-Mode Input Voltage Range Includes Ground, Allowing Direct Sensing Near Ground
- Low Input Bias and Offset Parameters:
  - Input Offset Voltage . . . 3 mV Typ
    A Versions . . . 2 mV Typ
  - Input Offset Current . . . 2 nA Typ
  - Input Bias Current . . . 20 nA Typ
    A Versions . . . 15 nA Typ
- Differential Input Voltage Range Equal to Maximum-Rated Supply Voltage . . . 32 V (26 V for LM2902)
- Open-Loop Differential Voltage Amplification . . . 100 V/mV Typ
- Internal Frequency Compensation

LM124 . . . D, J, OR W PACKAGE
LM124A . . . J PACKAGE
LM224, LM224A . . . D OR N PACKAGE
LM324 . . . D, N, NS, OR PW PACKAGE
LM324A . . . D, DB, N, NS, OR PW PACKAGE
LM2902 . . . D, N, NS, OR PW PACKAGE
(TOP VIEW)

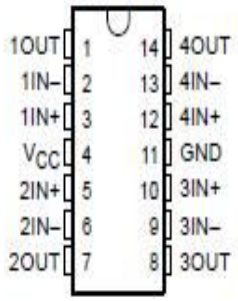

LM124, LM124A . . . FK PACKAGE
(TOP VIEW)

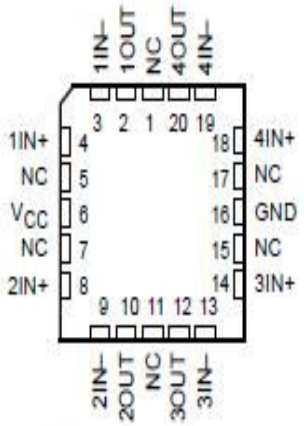

NC – No internal connection

description/ordering information

These devices consist of four independent high-gain frequency-compensated operational amplifiers that are designed specifically to operate from a single supply over a wide range of voltages. Operation from split supplies also is possible when the difference between the two supplies is 3 V to 30 V (for the LM2902, 3 V to 26 V) and V_{CC} is at least 1.5 V more positive than the input common-mode voltage. The low supply-current drain is independent of the magnitude of the supply voltage.

Applications include transducer amplifiers, dc amplification blocks, and all the conventional operational-amplifier circuits that now can be more easily implemented in single-supply-voltage systems. For example, the LM124 can be operated directly from the standard 5-V supply that is used in digital systems and easily provides the required interface electronics without requiring additional ±15-V supplies.

APPENDIX F

MPS-2000 Pressure Sensor Datasheet

MPS-2000-006GR

DIP Pressure Sensor

DESCRIPTION

The MPS-2000 features silicon pressure sensors in 6-pin dual in-line packages. All parts in these series are uncompensated high-performance die mounted on a substrate with a plastic cap. Pins are designed for through-board assembly. The MPS-2000 is ideal for applications requiring low hysteresis, high reliability and stability.

With constant voltage excitation, the MPS-2000 produces a voltage output that is linearly proportional to the input pressure. The user can provide MPS-2000 with signal conditioning circuitry to amplify the output signal or to maximize OEM value added. The MPS-2000 is compatible with most noncorrosive gases and dry air.

SCHEMATIC DIAGRAM

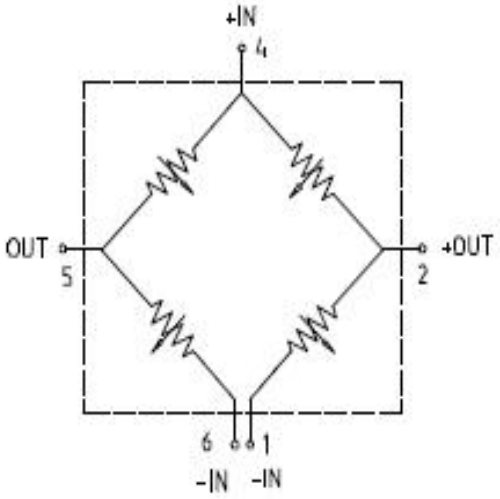

FEATURES

- Competitive price dual in-line package
- Wide operating temperature range:- 40 to +85°C
- Solid-state reliability
- Easy to Use
- Easily Embedded in OEM Equipment

APPLICATIONS

- Blood Pressure Meter
- Digital Pressure Gauges
- Environmental Monitoring
- Consumer & Sports
- Medical Instrumentation & Monitoring
- Disposable Blood Pressure

HOW TO ORDER

Part Number:	Description:
MPS-2000	5.8 psig, DIP

Parameter	Value	Units	Notes
General			
Pressure Range	5.8	PSIG	40 KPaG
Maximum Overpressure	3X		rated pressure
Electrical @25°C (77°F) unless otherwise specified			
Excitation	5	VDC	
Input Impedance	4~6	kΩ	
Output Impedance	4~6	kΩ	
Environmental			
Operating Temperature Range	-40~+85	°C	-40°F ~+185°F
Storage Temperature Range	-40~+125	°C	-40°F ~+257°F
Mechanical			
Weight	0.62	grams	
Media Compatibility	Clean, dry air & noncorrosive gases		
PERFORMANCE(1)			
Zero Offset	±20	mV	
Span	50~100	mV	
Bridge Resistance	4~6	kΩ	
Linearity	±0.2	% Span	2
Hysteresis	±0.2	% Span	
Temperature Coefficient of Zero Offset	±0.08	% Span/°C	3
Temperature Coefficient of Span	-0.21	%Span/°C	3

Notes: 1. All values are Minimum/Maximum and are measured at 5 VDC and 25°C unless otherwise specified.
2. Best fit straight line.
3. Between 0°C and 40°C. Temperature coefficients are typical values.

PACKAGE DIAGRAM

APPENDIX G

L78XX Voltage Regulator Datasheet

L7800 SERIES

POSITIVE VOLTAGE REGULATORS

- OUTPUT CURRENT TO 1.5A
- OUTPUT VOLTAGES OF 5; 5.2; 6; 8; 8.5; 9; 12; 15; 18; 24V
- THERMAL OVERLOAD PROTECTION
- SHORT CIRCUIT PROTECTION
- OUTPUT TRANSITION SOA PROTECTION

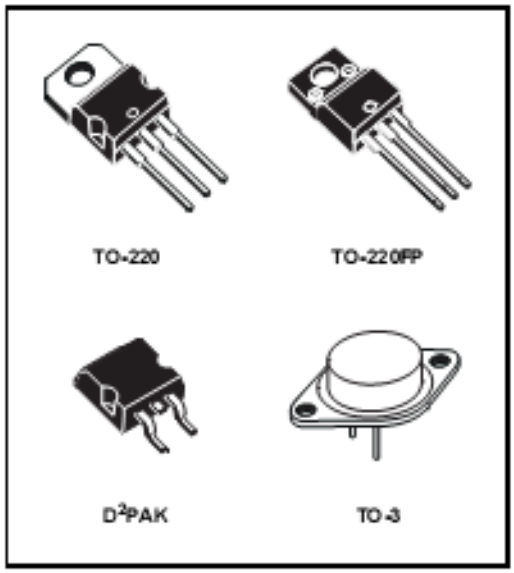

DESCRIPTION

The L7800 series of three-terminal positive regulators is available in TO-220, TO-220FP, TO-3 and D^2PAK packages and several fixed output voltages, making it useful in a wide range of applications. These regulators can provide local on-card regulation, eliminating the distribution problems associated with single point regulation. Each type employs internal current limiting, thermal shut-down and safe area protection, making it essentially indestructible. If adequate heat sinking is provided, they can deliver over 1A output current. Although designed primarily as fixed voltage regulators, these devices can be used with external components to obtain adjustable voltage and currents.

SCHEMATIC DIAGRAM

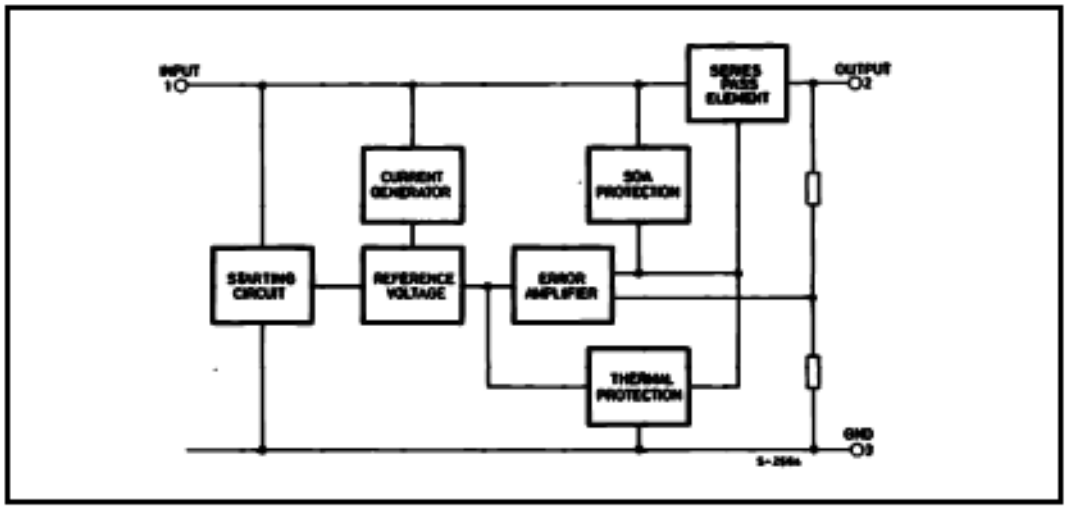

ABSOLUTE MAXIMUM RATINGS

Symbol	Parameter*		Value	Unit
V_I	DC Input Voltage	for V_O= 5 to 18V	35	V
		for V_O= 20, 24V	40	
I_O	Output Current		Internally Limited	
P_{tot}	Power Dissipation		Internally Limited	
T_{stg}	Storage Temperature Range		-65 to 150	°C
T_{op}	Operating Junction Temperature Range	for L7800	-55 to 150	°C
		for L7800C	0 to 150	

Absolute Maximum Ratings are those values beyond which damage to the device may occur. Functional operation under these condition is not implied.

THERMAL DATA

Symbol	Parameter	D^2PAK	TO-220	TO-220FP	TO-3	Unit
$R_{thj-case}$	Thermal Resistance Junction-case Max	3	5	5	4	°C/W
$R_{thj-amb}$	Thermal Resistance Junction-ambient Max	62.5	50	60	35	°C/W

SCHEMATIC DIAGRAM

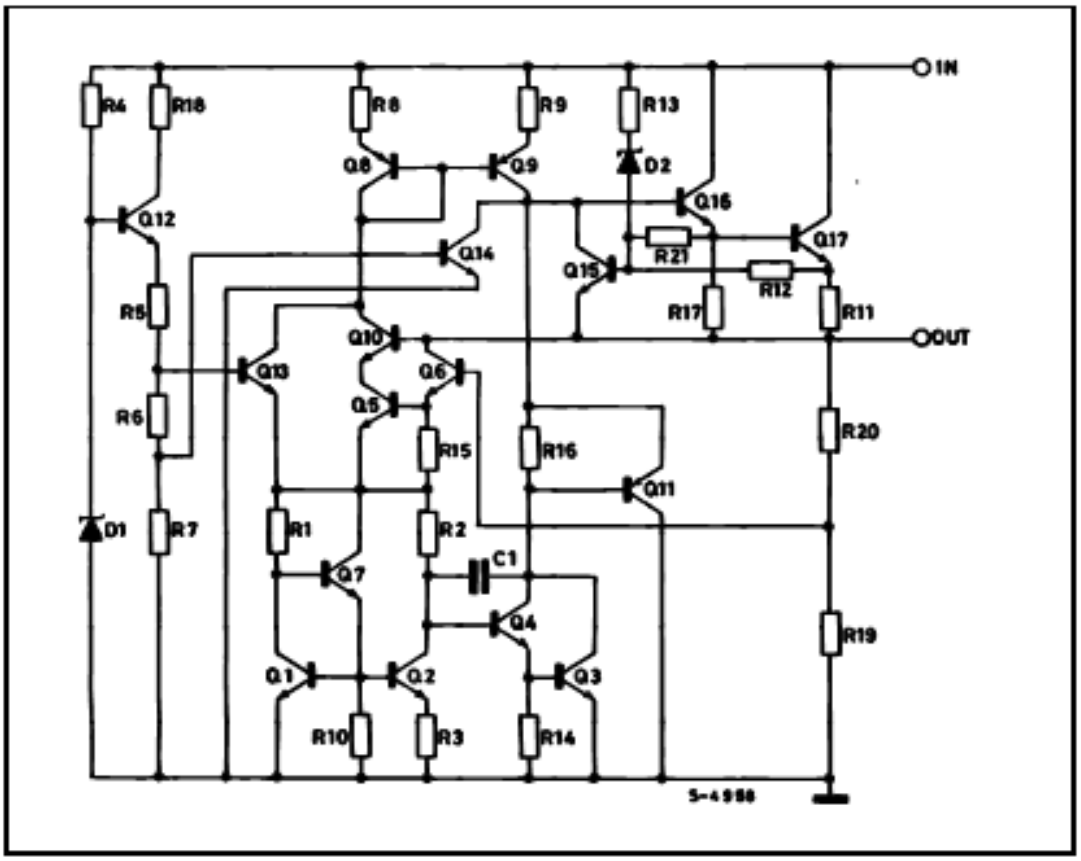

CONNECTION DIAGRAM (top view)

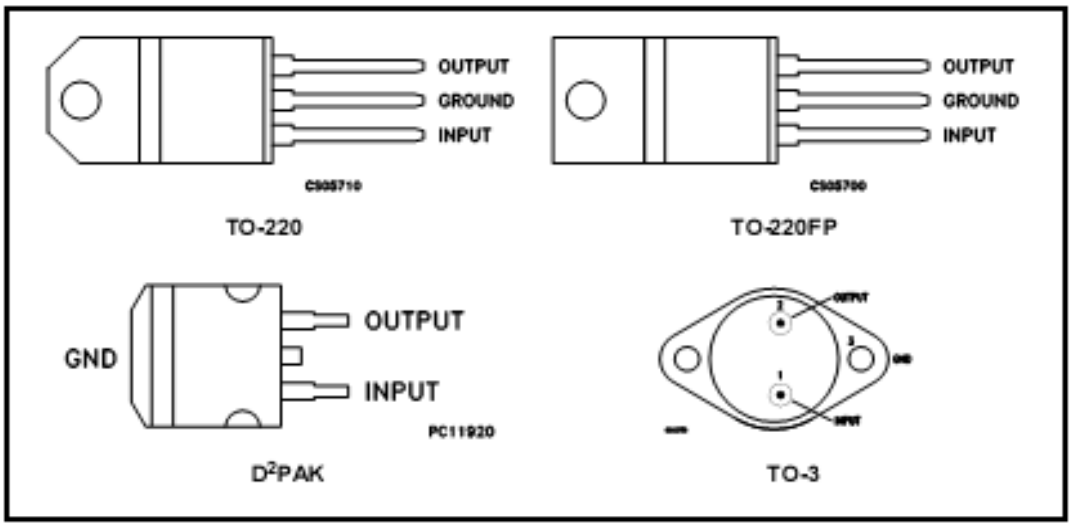

ORDERING CODES

TYPE	TO-220	D^2PAK (*)	TO-220FP	TO-3	OUTPUT VOLTAGE
L7805				L7805T	5 V
L7805C	L7805CV	L7805CD2T	L7805CP	L7805CT	5 V
L7852C	L7852CV	L7852CD2T	L7852CP	L7852CT	5.2 V
L7806				L7806T	6 V
L7806C	L7806CV	L7806CD2T	L7806CP	L7806CT	6 V
L7808				L7808T	8 V
L7808C	L7808CV	L7808CD2T	L7808CP	L7808CT	8 V
L7885C	L7885CV	L7885CD2T	L7885CP	L7885CT	8.5 V
L7809C	L7809CV	L7809CD2T	L7809CP	L7809CT	9 V
L7812				L7812T	12 V
L7812C	L7812CV	L7812CD2T	L7812CP	L7812CT	12 V
L7815				L7815T	15 V
L7815C	L7815CV	L7815CD2T	L7815CP	L7815CT	15 V
L7818				L7818T	18 V
L7818C	L7818CV	L7818CD2T	L7818CP	L7818CT	18 V
L7820				L7820T	20 V
L7820C	L7820CV	L7820CD2T	L7820CP	L7820CT	20 V
L7824				L7824T	24 V
L7824C	L7824CV	L7824CD2T	L7824CP	L7824CT	24 V

(*) Available in Tape & Reel with the suffix "-TR".

Figure 3 : Ripple Rejection

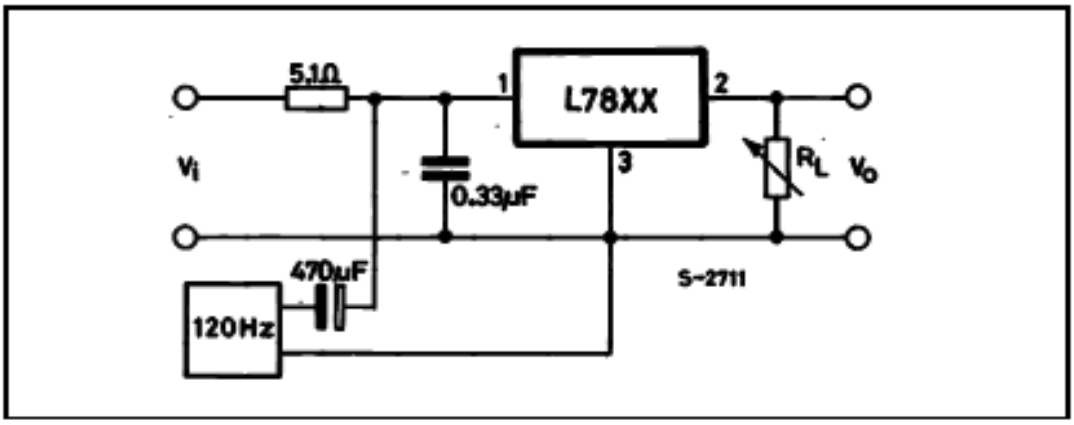

ELECTRICAL CHARACTERISTICS OF L7805 (refer to the test circuits, T_J = -55 to 150°C, V_I = 10V, I_O = 500 mA, C_I = 0.33 µF, C_O = 0.1 µF unless otherwise specified).

Symbol	Parameter	Test Conditions	Min.	Typ.	Max.	Unit
V_O	Output Voltage	T_J = 25°C	4.8	5	5.2	V
V_O	Output Voltage	I_O = 5 mA to 1 A $P_O \leq$ 15W V_I = 8 to 20 V	4.65	5	5.35	V
ΔV_O(*)	Line Regulation	V_I = 7 to 25 V T_J = 25°C		3	50	mV
		V_I = 8 to 12 V T_J = 25°C		1	25	
ΔV_O(*)	Load Regulation	I_O = 5 mA to 1.5 A T_J = 25°C			100	mV
		I_O = 250 to 750 mA T_J = 25°C			25	
I_d	Quiescent Current	T_J = 25°C			6	mA
ΔI_d	Quiescent Current Change	I_O = 5 mA to 1 A			0.5	mA
		V_I = 8 to 25 V			0.8	
$\Delta V_O/\Delta T$	Output Voltage Drift	I_O = 5 mA		0.6		mV/°C
eN	Output Noise Voltage	B =10Hz to 100KHz T_J = 25°C			40	µV/V_O
SVR	Supply Voltage Rejection	V_I = 8 to 18 V f = 120Hz	68			dB
V_d	Dropout Voltage	I_O = 1 A T_J = 25°C		2	2.5	V
R_O	Output Resistance	f = 1 KHz		17		mΩ
I_{sc}	Short Circuit Current	V_I = 35 V T_J = 25°C		0.75	1.2	A
I_{scp}	Short Circuit Peak Current	T_J = 25°C	1.3	2.2	3.3	A

(*) Load and line regulation are specified at constant junction temperature. Changes in V_O due to heating effects must be taken into account separately. Pulse testing with low duty cycle is used.

ELECTRICAL CHARACTERISTICS OF L7806 (refer to the test circuits, T_J = -55 to 150°C, V_I = 11V, I_O = 500 mA, C_I = 0.33 µF, C_O = 0.1 µF unless otherwise specified).

Symbol	Parameter	Test Conditions	Min.	Typ.	Max.	Unit
V_O	Output Voltage	T_J = 25°C	5.75	6	6.25	V
V_O	Output Voltage	I_O = 5 mA to 1 A $P_O \leq$ 15W V_I = 9 to 21 V	5.65	6	6.35	V
ΔV_O(*)	Line Regulation	V_I = 8 to 25 V T_J = 25°C			60	mV
		V_I = 9 to 13 V T_J = 25°C			30	
ΔV_O(*)	Load Regulation	I_O = 5 mA to 1.5 A T_J = 25°C			100	mV
		I_O = 250 to 750 mA T_J = 25°C			30	
I_d	Quiescent Current	T_J = 25°C			6	mA
ΔI_d	Quiescent Current Change	I_O = 5 mA to 1 A			0.5	mA
		V_I = 9 to 25 V			0.8	
$\Delta V_O/\Delta T$	Output Voltage Drift	I_O = 5 mA		0.7		mV/°C
eN	Output Noise Voltage	B =10Hz to 100KHz T_J = 25°C			40	µV/V_O
SVR	Supply Voltage Rejection	V_I = 9 to 19 V f = 120Hz	65			dB
V_d	Dropout Voltage	I_O = 1 A T_J = 25°C		2	2.5	V
R_O	Output Resistance	f = 1 KHz		19		mΩ
I_{sc}	Short Circuit Current	V_I = 35 V T_J = 25°C		0.75	1.2	A
I_{scp}	Short Circuit Peak Current	T_J = 25°C	1.3	2.2	3.3	A

(*) Load and line regulation are specified at constant junction temperature. Changes in V_O due to heating effects must be taken into account separately. Pulse testing with low duty cycle is used.

ELECTRICAL CHARACTERISTICS OF L7808 (refer to the test circuits, T_J = -55 to 150°C, V_I = 14V, I_O = 500 mA, C_I = 0.33 µF, C_O = 0.1 µF unless otherwise specified).

Symbol	Parameter	Test Conditions	Min.	Typ.	Max.	Unit
V_O	Output Voltage	T_J = 25°C	7.7	8	8.3	V
V_O	Output Voltage	I_O = 5 mA to 1 A $P_O \leq$ 15W V_I = 11.5 to 23 V	7.6	8	8.4	V
ΔV_O(*)	Line Regulation	V_I = 10.5 to 25 V T_J = 25°C			80	mV
		V_I = 11 to 17 V T_J = 25°C			40	
ΔV_O(*)	Load Regulation	I_O = 5 mA to 1.5 A T_J = 25°C			100	mV
		I_O = 250 to 750 mA T_J = 25°C			40	
I_d	Quiescent Current	T_J = 25°C			6	mA
ΔI_d	Quiescent Current Change	I_O = 5 mA to 1 A			0.5	mA
		V_I = 11.5 to 25 V			0.8	
$\Delta V_O/\Delta T$	Output Voltage Drift	I_O = 5 mA		1		mV/°C
eN	Output Noise Voltage	B =10Hz to 100KHz T_J = 25°C			40	µV/V_O
SVR	Supply Voltage Rejection	V_I = 11.5 to 21.5 V f = 120Hz	62			dB
V_d	Dropout Voltage	I_O = 1 A T_J = 25°C		2	2.5	V
R_O	Output Resistance	f = 1 KHz		16		mΩ
I_{sc}	Short Circuit Current	V_I = 35 V T_J = 25°C		0.75	1.2	A
I_{scp}	Short Circuit Peak Current	T_J = 25°C	1.3	2.2	3.3	A

(*) Load and line regulation are specified at constant junction temperature. Changes in V_O due to heating effects must be taken into account separately. Pulse testing with low duty cycle is used.

APPENDIX H

User's Manual

Parts of the Design Prototype

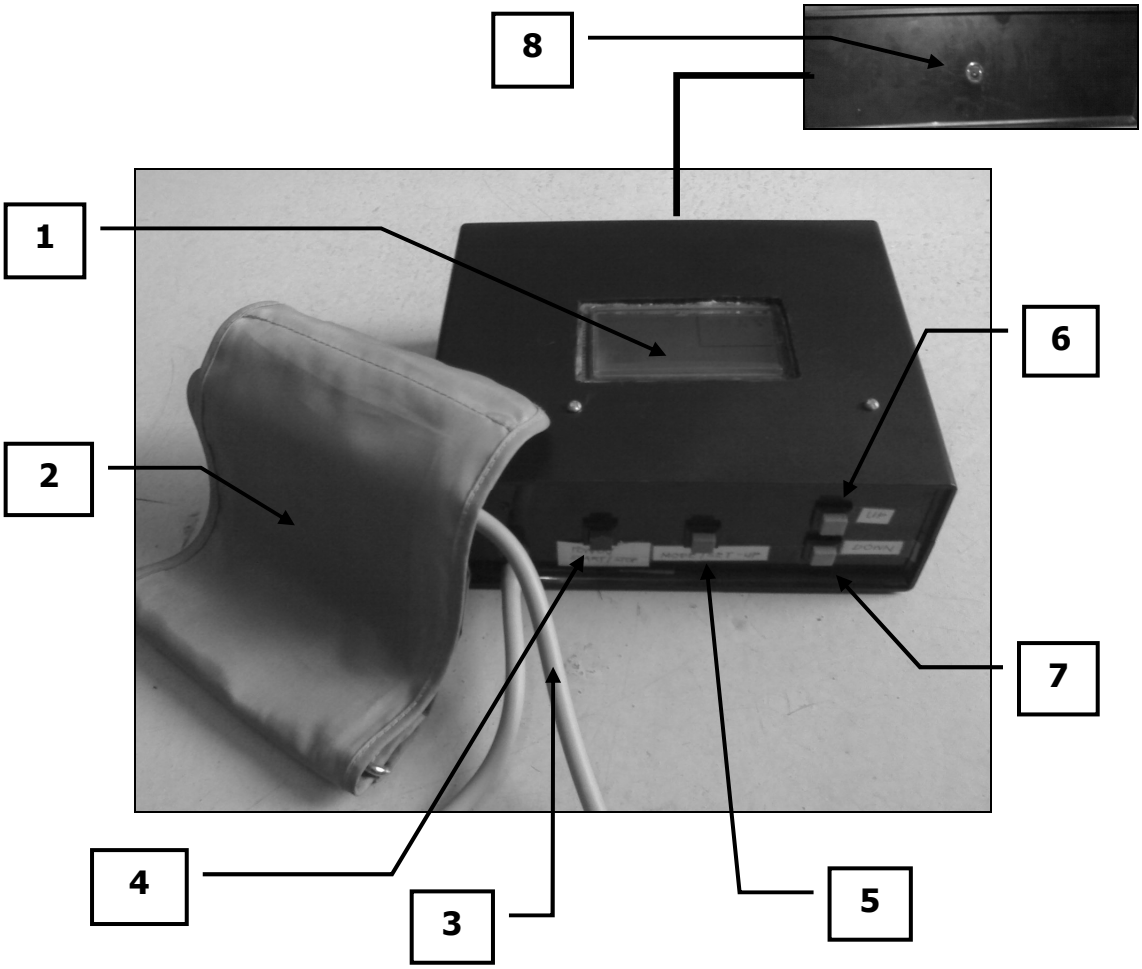

1. LCD Screen
2. Arm Cuff
3. Air Hose
4. Power/Start/Stop Button
5. Mode/Setup Button
6. Up Button
7. Down Button
8. AC Adaptor Slot

Parts of the LCD Display

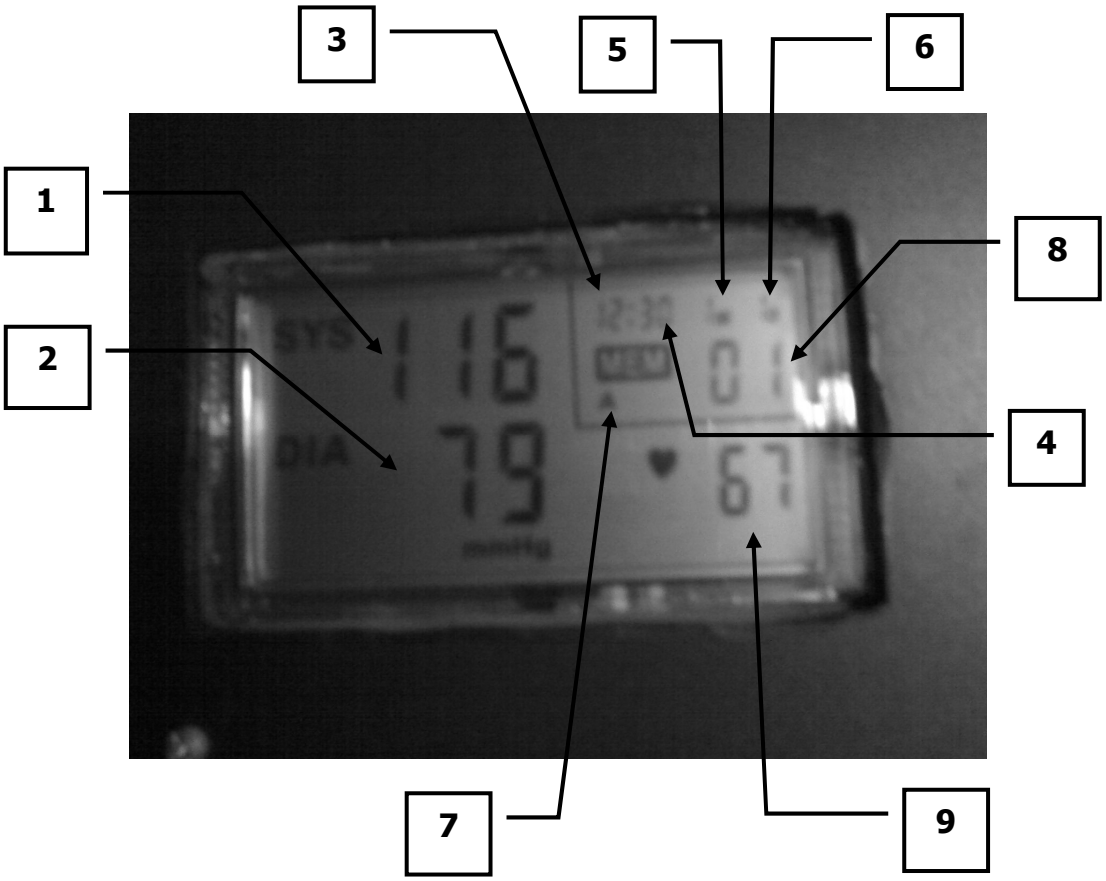

1. Systolic Reading
2. Diastolic Reading
3. Hour
4. Minute
5. Month
6. Day
7. Memory Module (A,B,C & D)
8. Memory Location (1-30)
9. Pulse Rate Reading

Tips before taking a blood pressure measurement

1. Avoid eating, smoking, exercising and bathing for 30 minutes before taking a measurement. Rest at least 15 minutes before taking a measurement.
2. Stress raises blood pressure. Avoid taking measurements during stressful times.
3. Measurement should be taken in a quiet place.
4. Remove tight-fitting clothing from your arm.
5. Seat in a chair with your feet flat on the floor. Rest your arm on a table so that the cuff is at the same level as your heart.
6. Remain still and do not talk during the measurement.
7. A single measurement does not provide an accurate indication of your true blood pressure. You need to take several readings over a period of time. Try to measure your blood pressure at about the same time for consistency.
8. Wait 2-3 minutes between measurements. The wait time allows the arteries to return to the condition prior to taking blood pressure measurement. You may need to increase the wait time depending on your individual physiological characteristics.

Procedure in getting blood pressure reading

1. Wrap the arm cuff into your upper arm well gripped. Be sure to place the cord a distance of about two fingers above the brachial artery. The grip should be able to allow at most two fingers be inserted inside the arm cuff.
2. Press the power button and hold it for a couple of seconds. The LCD screen will display 0/0 when you first press the power button.
3. To start getting the blood pressure reading, press the start button lightly. Note. After pressing the start button, the device will automatically pump air into the arm cuff; expect the cuff to get tighter until it reaches around 190 mmHg.
4. The arm cuff will deflate gradually while the reading in the LCD screen is decreasing.
5. The LCD will display the systolic reading, diastolic reading and pulse rate reading.
6. After a few seconds display SA will be seen as a sign that readings are stored in the memory.
7. After so, remove the arm cuff carefully.
8. To turn the device off, press and hold the power button.

Note: User may press stop button to discontinue the process of getting the blood pressure reading.

Procedure in setting the date and time

1. Press the setup button.
2. The month mode will blink.
3. Press the mode button to select which mode to change such as hour, minute, month and day.
4. After selecting the mode, use the up and down button to change the setting.
5. Setting will be saved by pressing the mode button until it goes back to the month mode and hold for a second.
6. The setting is changed if the mode stops blinking.

Note: Configuring the date and time can only be done before starting the operation.

Procedure in recalling previous reading

1. Press and hold the power button.
2. Press setup button.
3. The memory location will blink.
4. Press the mode button to select memory module (A, B, C & D).
5. The memory module will blink. (A is the default memory module).
6. Press the up and down button to select from A to D.
7. After selecting the memory module, press mode button to go back to the memory location mode.
8. Press up and down button to view the readings.

Troubleshooting Procedures

Problems	Causes and Solutions
No Power. No Display on the LCD Screen.	Get the AC adapter, plug it to the jack of the prototype then connect it to the power outlet. Charge the prototype.
There is a display but cannot start the operation. The display is dim.	The power of the battery is insufficient, charge the prototype.
An 'EE' error appears after getting blood pressure measurement.	An accurate reading cannot be obtained. The arm cuff in under-inflated. Wait 15 minutes and measure again. Try loosening the cuff to allow blood circulation in your arm while waiting.
The arm cuff does not inflate after starting.	The tube inside the case is not connected to the sensor. Connect the tube properly.
Measurement values appear too high or too low.	Blood pressure varies constantly. Review tips before taking blood pressure.
The LED does not lit up while using the AC adapter and charging.	The AC adapter is not properly connected to the jack. Connect the adapter properly.

Safety Measures

1. Do not spill any liquid or insert any foreign objects
   Do not spill any liquids or insert any foreign objects into the PSoC Based Blood Pressure Monitor or the adapter. If any liquids or foreign objects enter the system, immediately remove the adapter from the wall outlet. Continued use could cause fire damage to the system.

2. Do not expose to strong impacts
   Do not expose the blood pressure meter to strong impact by striking the system with other objects, or by dropping it. If the LCD is damaged, it could cause injury, or if the built in battery pack is damaged and builds up heat, it could cause burns.

3. Do not use any adapters other than the one suited to the PSoC Based Blood Pressure Monitor
   Be sure to use the adapter suited to this device. Failure to do such could cause fire or injury.

4. Do not use any power source other than household power.
   The adapter can only be used with household power (220 Volts), such as overseas; it could cause fire or injury.

5. Do not use defective adapter.
   Do not use a deformed adapter or one with damaged adapter prongs. Doing so could cause fire or electric shock.

6. Insert the adapter prongs fully into the wall outlet.
   Insert the adapter prongs fully into the wall outlet. If it is inserted inappropriately, it could cause fire or electric shock.

7. Do not damage the adapter itself and cord.

8. The LCD screen is made of glass. External causes, including striking it with an object, pushing hard on it or dropping the Blood Pressure Meter could break it. Take great care when handling it.

9. Although an LCD screen is made using high precision technology, due to the characteristics of the LCD, there are some dots that do not light up or that never turn OFF. However, please take note that this is not a defect.