FLM integration rod

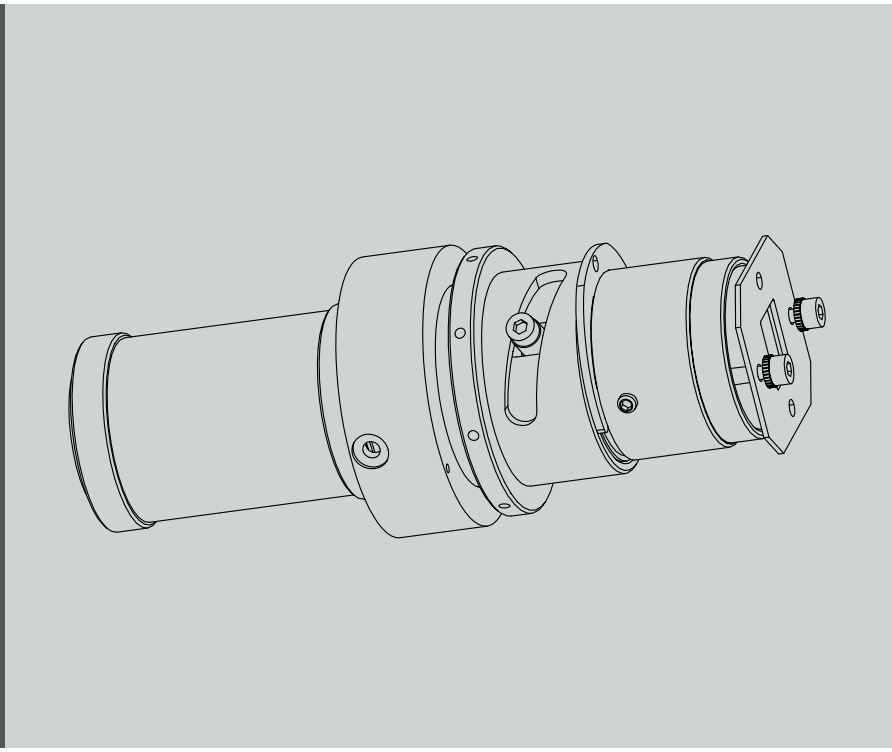

Installation manual

R5976993/00
19/09/2006

BARCO

Visibly yours

Barco nv Events
Noordlaan 5, B-8520 Kuurne
Phone: +32 56.36.89.70
Fax: +32 56.36.88.24
E-mail: sales.events@barco.com
Visit us at the web: www.barco.com

Printed in Belgium

Changes

Barco provides this manual 'as is' without warranty of any kind, either expressed or implied, including but not limited to the implied warranties or merchantability and fitness for a particular purpose. Barco may make improvements and/or changes to the product(s) and/or the program(s) described in this publication at any time without notice.

This publication could contain technical inaccuracies or typographical errors. Changes are periodically made to the information in this publication; these changes are incorporated in new editions of this publication.

Copyright ©

Guarantee and Compensation

Barco provides a guarantee relating to perfect manufacturing as part of the legally stipulated terms of guarantee. On receipt, the purchaser must immediately inspect all delivered goods for damage incurred during transport, as well as for material and manufacturing faults Barco must be informed immediately in writing of any complaints.

The period of guarantee begins on the date of transfer of risks, in the case of special systems and software on the date of commissioning, at latest 30 days after the transfer of risks. In the event of justified notice of complaint, Barco can repair the fault or provide a replacement at its own discretion within an appropriate period. If this measure proves to be impossible or unsuccessful, the purchaser can demand a reduction in the purchase price or cancellation of the contract. All other claims, in particular those relating to compensation for direct or indirect damage, and also damage attributed to the operation of software as well as to other services provided by Barco, being a component of the system or independent service, will be deemed invalid provided the damage is not proven to be attributed to the absence of properties guaranteed in writing or due to the intent or gross negligence or part of Barco.

If the purchaser or a third party carries out modifications or repairs on goods delivered by Barco, or if the goods are handled incorrectly, in particular if the systems are commissioned operated incorrectly or if, after the transfer of risks, the goods are subject to influences not agreed upon in the contract, all guarantee claims of the purchaser will be rendered invalid. Not included in the guarantee coverage are system failures which are attributed to programs or special electronic circuitry provided by the purchaser, e.g. interfaces. Normal wear as well as normal maintenance are not subject to the guarantee provided by Barco either.

The environmental conditions as well as the servicing and maintenance regulations specified in the this manual must be complied with by the customer.

Trademarks

TABLE OF CONTENTS

1. FLM INTEGRATION ROD

About this chapter

This chapter describes briefly the functionality of the integration rod and how to diagnose the integration rod.

Overview

- Introduction
- Rod diagnostic

1.1 Introduction

Functionality

The integration rod is made of fused silica and is approximately 13 centimeter long. The cross-section of the rod has the same aspect ratio as the active surface of the DMD's used in the light processor. The function of the integration rod is to match the shape of the light path to the shape of the DMD's and to neutralize the hot spot effect caused by the light source. Futhermore, the integration rod ensures that the light beam is focused on the DMD's, which results in an optimally focused light beam on the screen.

The integration rod is located at the entrance of the light pipe. The light emitted by the lamp is reflected via the "cold mirror" into the rod, which integrates the incoming light into a homogeneous rectangle shaped beam of light.

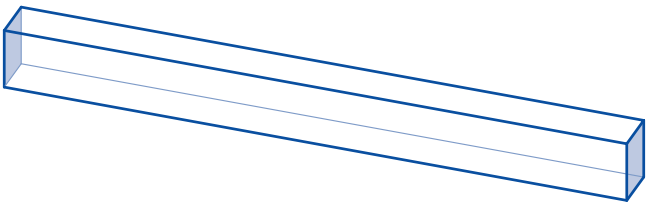

Image 1-1

The entrance and exit side of the integration rod are coated to achieve optimal performance. Clearly the rod may never be contaminated with grease, dirt, liquid or the such. for optimal protection the rod is mounted inside an aluminium tube, which has requires replacing together with the rod. This aluminum tube also contains an adjustment mechanism to position the rod inside the light pipe. The integration rod, the aluminium tube and the adjustment mechanism together form the "integration rod assembly".

Parts

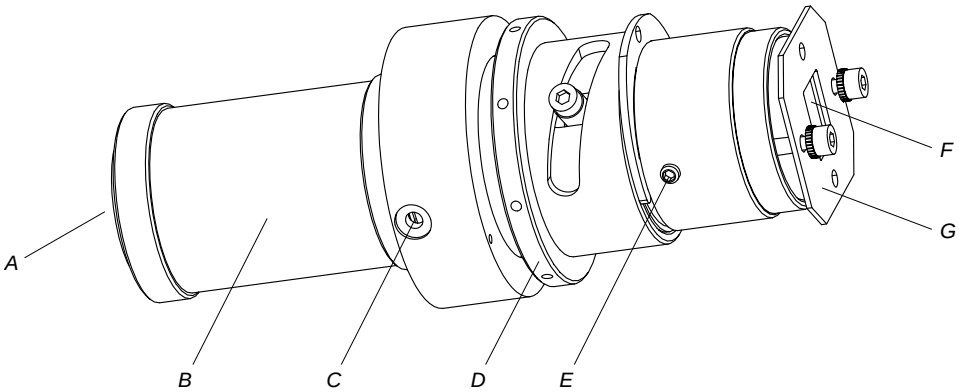

Image 1-2

A Rod exit.
B Aluminium tube.
C Fixation screw rod assembly.
D Rod adjustment ring.
E Set screw for rod focus adjustment.
F Rod entrance.
G Rod entrance mask.

CAUTION: Never touch the entrance or exit of the integration rod assembly. Greasy fingerprints or other dirt on the integration rod entrance or exit will burn into the rod and cause permanent damage.

Order info

Order number	Description
R854296K	FLM R20+ (SXGA+) integration rod assembly.

1.2 Rod diagnostic

General

Due to bad environmental conditions the integration rod may become contaminated with grease, dust, dirt or other particles, which will burn into the rod and cause permanent damage. As a result spots may become visible in the projected image on the screen. To confirm that these spots are caused by a damages to the rod please diagnose the rod as described in the following procedure.

WARNING: This procedure may only be performed by qualified technical service personnel.

Definition of “qualified service technicians” or ”qualified technicians”: Persons having appropriate technical training and experience necessary to be aware of hazards to which they are exposed in performing a task and of measures to minimize the danger to themselves or other persons.

Necessary tools

- 7 mm flat screw driver.
- 2 mm Allen key.

How to diagnose the integration rod of the FLM ?

1. Remove the side cover of the projector. See users manual of the projector to do so.
   Caution: *Remove the side cover of the FLM projector only in a clean and dust free area. Never remove the side cover in an area which is subject to airborne contaminants such as that produced by smoke machines or similar.*
2. Switch on the projector and project a white test pattern. See users manual of the projector to do so. Make sure that the projected white test pattern is focused.
3. Release the two set screws (A) as illustrated. Use a 2 mm Allen key. It’s not necessary to remove the set screws.

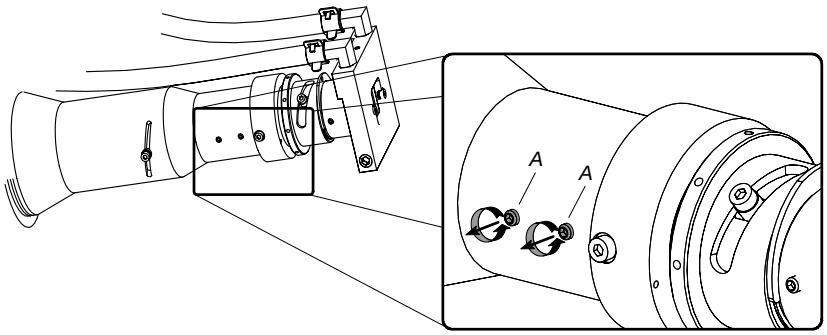

Image 1-3

4. Gently rotate the adjustment ring (D) of the integration rod assembly back and forward while watching the projected image.

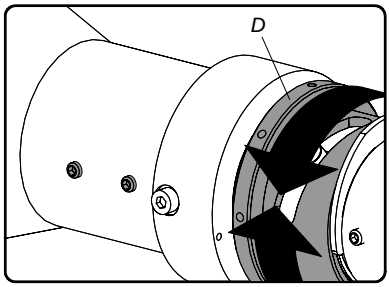

Image 1-4

5. Do you see spots in the projected image rotate along with the movements of the rod?
   If yes, these spots are caused by damages to the integration rod. Replace the rod assembly.
   If no, integration rod is OK. Re-adjust and secure the integration rod and reinstall the side cover of the projector.

2. INSTALLATION PROCESS

WARNING: This procedure may only be performed by qualified technical service personnel.

Definition of “qualified service technicians” or ”qualified technicians”: Persons having appropriate technical training and experience necessary to be aware of hazards to which they are exposed in performing a task and of measures to minimize the danger to themselves or other persons.

Process stages:

- The first stage in the process is to remove the side cover of the FLM projector. See user’s manual of the FLM projector.
- Remove the light processor. See procedure "Removal of the light processor", page 8 .
- Remove the integration rod assembly. See procedure "Removal of the integration rod assembly", page 11.
- Install the new integration rod assembly. See procedure "Installing a new integration rod assembly", page 12.
- Reinstall the light processor. See procedure "Installing the light processor", page 14.
- Check the pressure of the liquid cooling circuit and if required refill the cooling circuit. Barco provides a liquid cooling refill kit for the FLM projector. Consult the manual of this kit for further instructions on how to obtain the correct pressure in the cooling circuit.
- The second last stage is to adjust the integration rod. See adjustment procedure "Adjusting the integration rod", page 17.
- The last stage is to reinstall the side cover. See user’s manual of the FLM projector.

2.1 Removal of the light processor

CAUTION: Remove the light processor of the FLM projector only in a clean and dust free area. Never remove the side cover in an area which is subject to airborne contaminants such as that produced by smoke machines or similar.

See user's manual to remove the side cover.

CAUTION: Remove the lens before removing the light processor !

Necessary tools

- 5 mm flat screw driver.
- 10 mm nut driver.

How to remove the light processor of the FLM projector ?

1. Remove the lens. See user's manual of the FLM projector.
2. Release the two captive screws at the bottom of the light processor as illustrated. Use a 10 mm nut driver or a 5 mm flat screw driver.

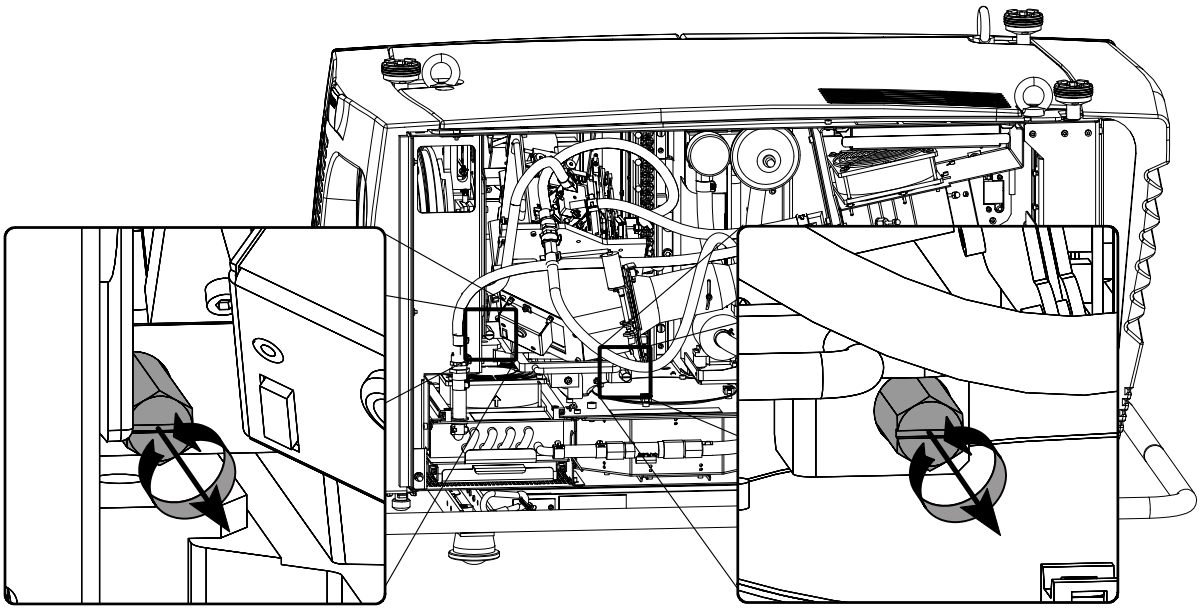

Image 2-1

3. Release the two captive screws at the right side of the light processor as illustrated. Use a 5 mm flat screw driver.
   Note: *The Formatting Interface Board (FIB) is attached to the light processor and has to be removed from the projector together with the light processort.*

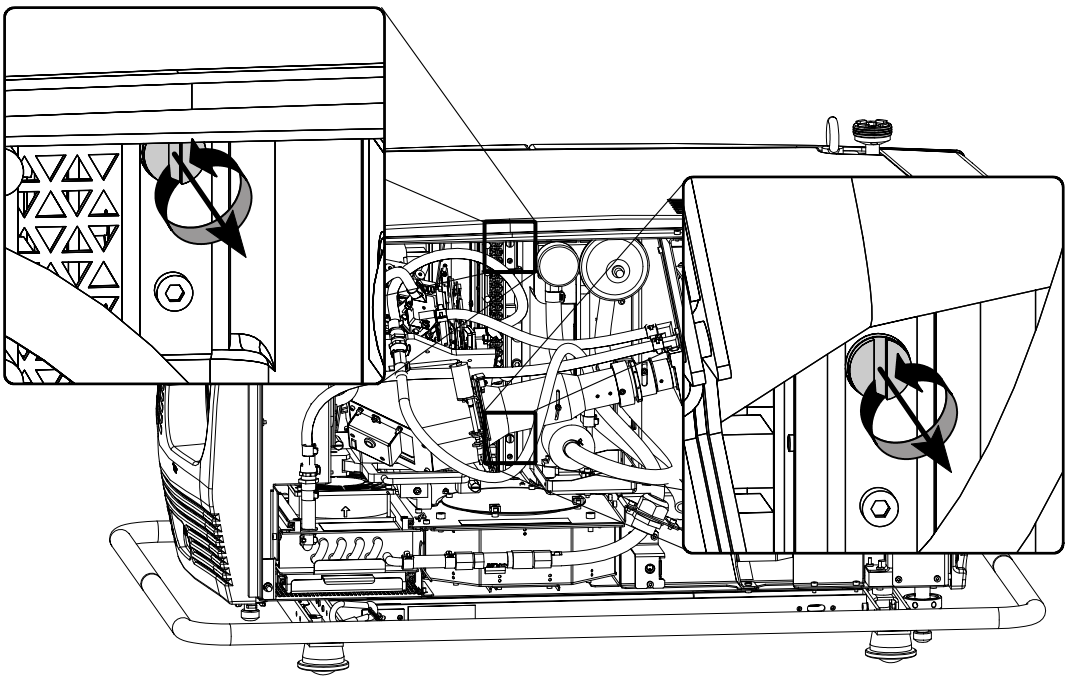

Image 2-2

4. Uncouple the cooling circuit from the light processor by unplugging the two valved fittings as illustrated. One valved fitting is located in the tube coming from the pump and leading to the light processor and the other valved fitting is located in the tube coming from the light pipe entrance and leading to the heat exchanger.
   Tip: *Sometimes a little cooling liquid will be spilled. Wrap a small cloth around the valved fitting while uncoupling to absorb the spilled cooling liquid.*

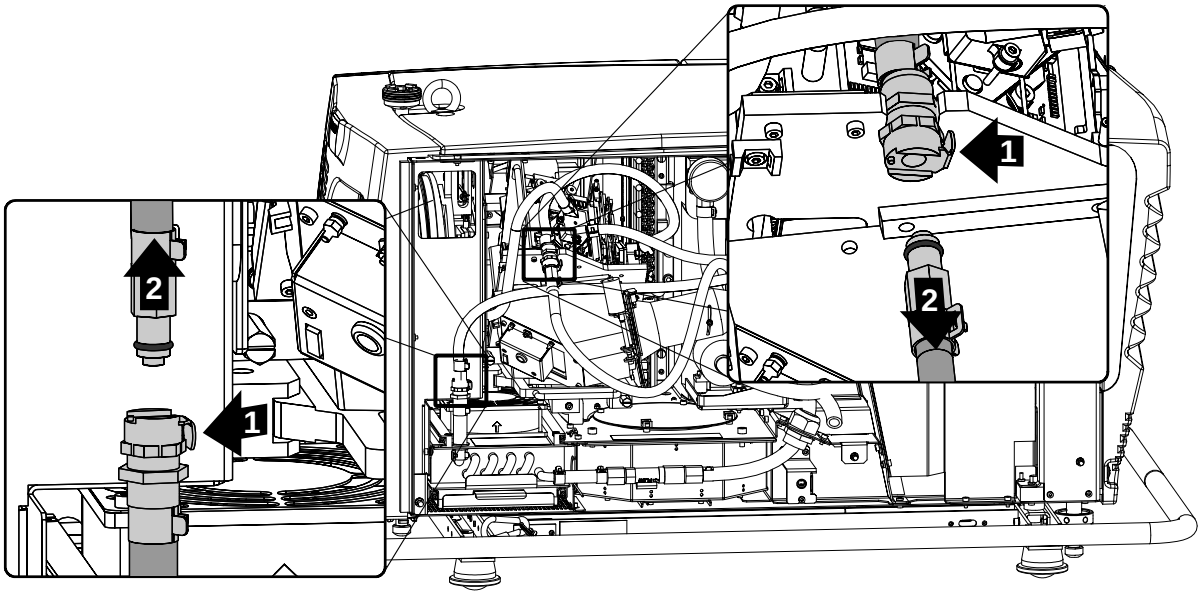

Image 2-3

5. Hold the light processor by the handles and gently pull the light processor out of its compartment.

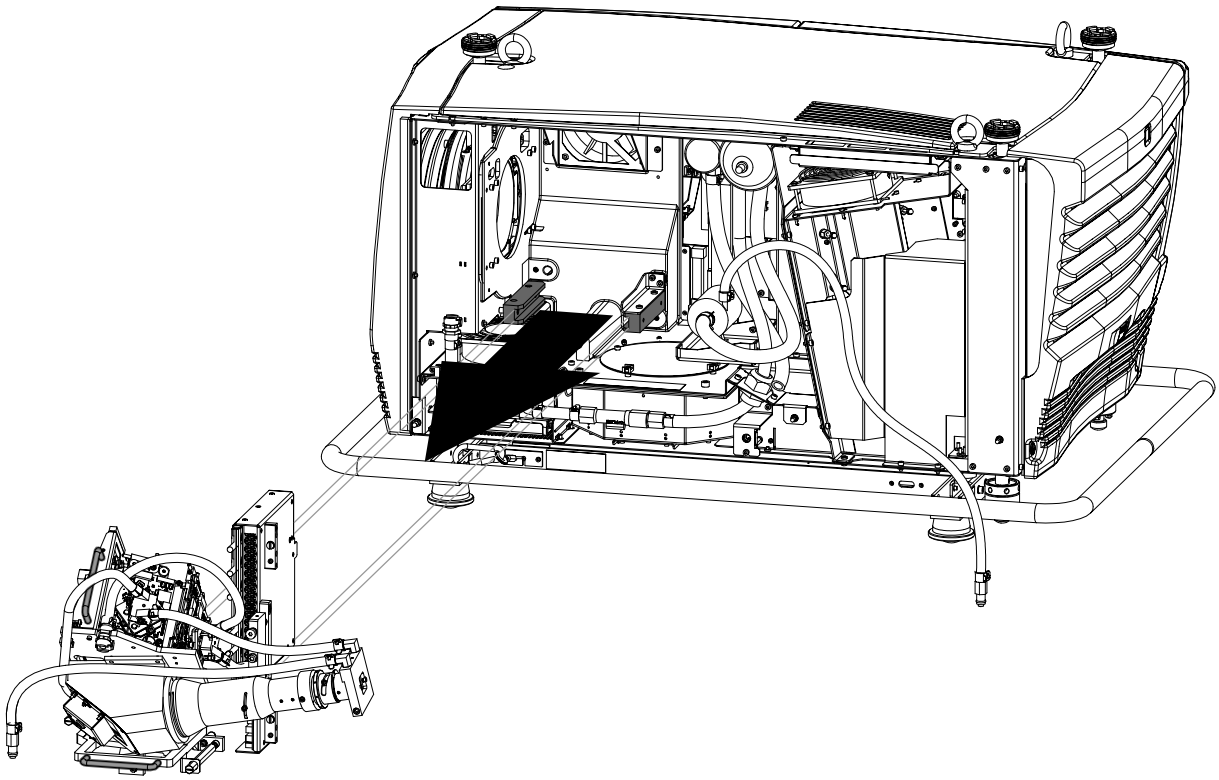

Image 2-4

6. Place the light processor, which includes the FIB, on a stable table.

2.2 Removal of the integration rod assembly

To remove the integration rod assembly from the light pipe the light processor unit has to be removed from the projector first.

CAUTION: All servicing to the light processor unit has to be done in a dust free area. Use compressed air to blow away all dust on the outside of the light processor unit before entering the unit into the dust free area.

Necessary tools

- Compressed air.
- 2 mm Allen key.
- 2,5 mm Allen key.

How to remove the integration rod from the light pipe ?

1. Remove the cooling block at the light pipe entrance by releasing the two socket head screws as illustrated. Use a 2,5 mm Allen key.
   Note: *Note that the screws, which fasten the cooling block, also fasten the mask between the cooling block and integration rod.*

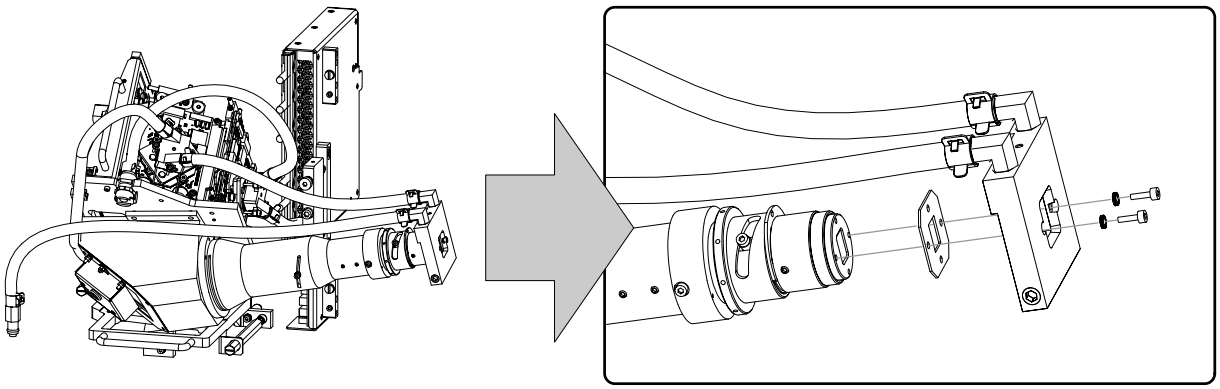

Image 2-5

2. Release the two set screws (A) as illustrated. Use a 2 mm Allen key. It's not necessary to remove the set screws.
3. Remove the socket head screw (B) as illustrated. Use a 2,5 mm Allen key.

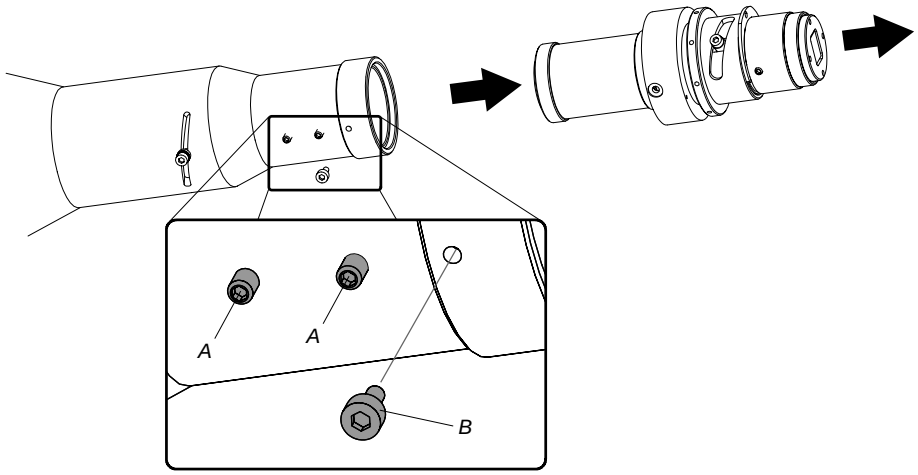

Image 2-6

4. Pull the integration rod assembly out of the light pipe.

Do not keep the light pipe entrance open (no integration rod installed) for a long period. This to prevent dust intrusion.

2.3 Installing a new integration rod assembly

Necessary tools

- Compressed air.
- 2 mm Allen key.
- 2,5 mm Allen key.

Necessary parts

Integration rod assembly.

How to install a new the integration rod assembly ?

1. Removing the mask (M) from the integration rod by releasing the socket screws (S). Use a 2,5 mm Allen key.
   Caution: *Never touch the entrance or exit side of the integration rod assembly.*

   Note: *The mask (M), the washers (W) and the socket screws (S) have to be reinstalled later in this procedure.*

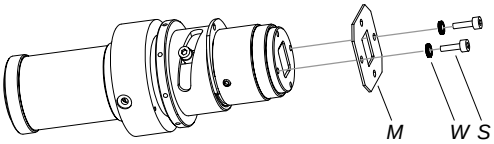

Image 2-7

2. Check if there are no dust particles present on the exit side of the integration rod assembly. If necessary remove the dust with compressed air.
   Note: *The exit side of the rod is much more critical than the entrance side of the rod.*
3. Check if the inner side of the light pipe entrance is dust free. If necessary remove the dust with compressed air.
4. Gently slide the integration rod into the light pipe as illustrated.

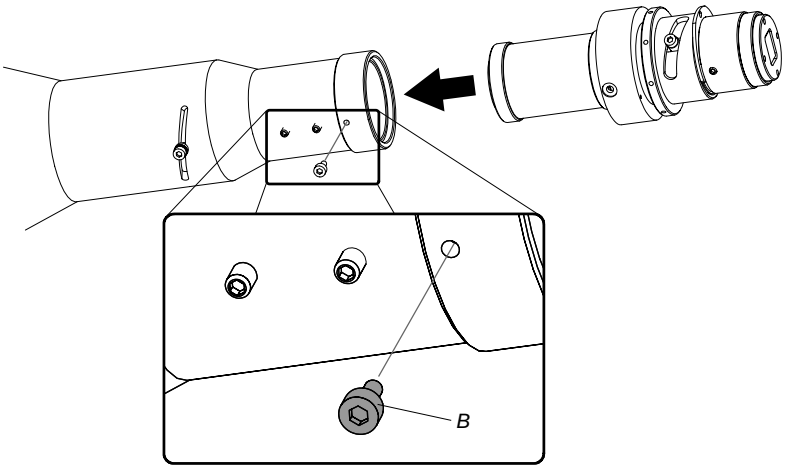

Image 2-8

5. Secure the integration rod with a hexagon socket head screw (B). Use a 2,5 mm Allen key.
6. Rotate the integration rod until the set screws (A) of the light pipe are aligned with the set screw (B) of the integration rod assembly as illustrated.

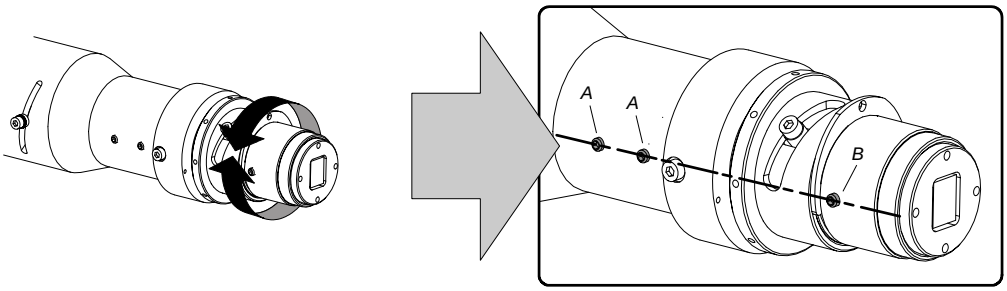

Image 2-9

7. Fasten the set screws (A). Use a 2 mm Allen key.

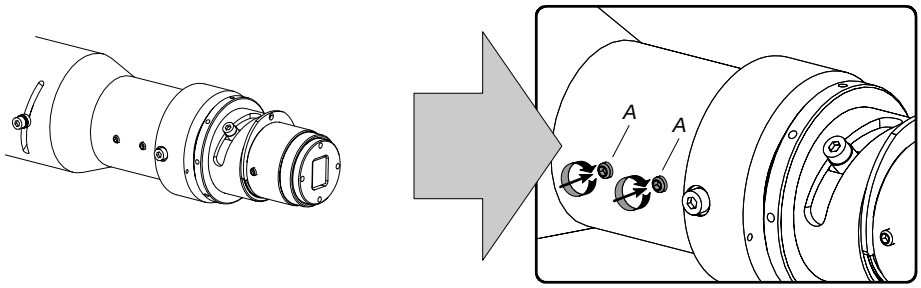

Image 2-10

8. Install the mask (M) and cooling block as illustrated. Use for that two washers (W) and two hexagon screws (S) which you removed in step one. Use a 2,5 mm Allen key.
   Caution: *Ensure that the mask (M) is placed in portrait like the entrance of the integration rod.*

   Ensure that the shining side of the mask (M) is facing the lamp.

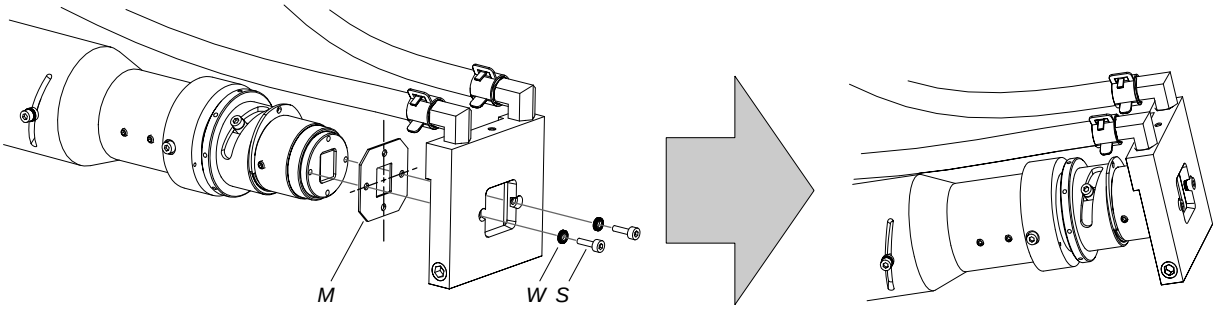

Image 2-11

The integration rod must be adjusted after installation. Follow the procedure "Adjusting the integration rod", page 17, after the light processor is reinstalled in the projector.

2.4 Installing the light processor

Necessary tools

- 5 mm flat screw driver.
- 10 mm nut driver.

How to install the light processor of the FLM projector ?

1. Hold the light processor by the handles and gently slide the light processor into the compartment of the projector.
   Note: *The bottom of the light processor is equipped with guides (G) and positioning pins (P).*

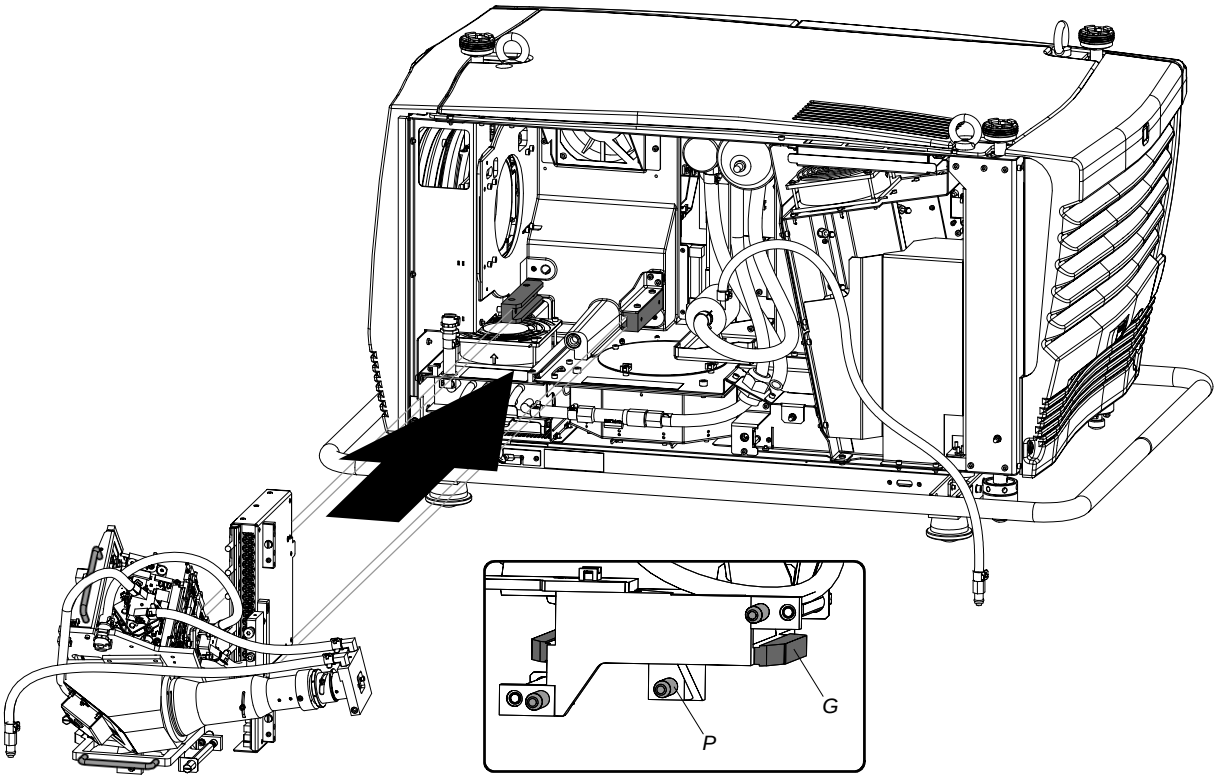

Image 2-12

2. Fasten the two captive screws at the bottom of the light processor as illustrated. Use a 10 mm nut driver or a 5 mm flat screw driver.

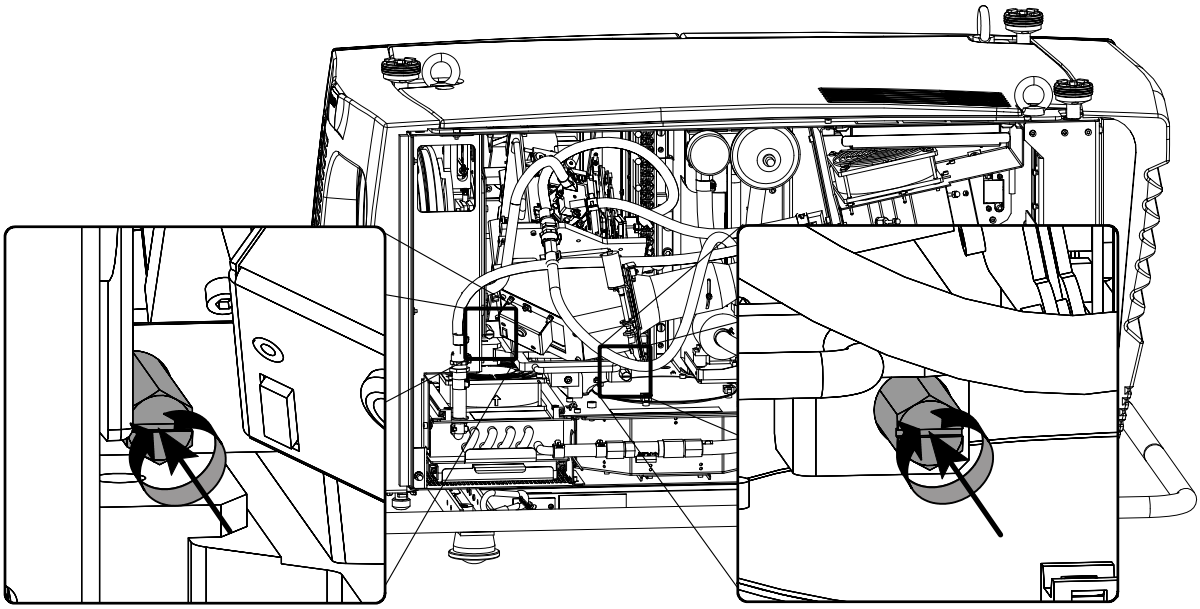

Image 2-13

3. Fasten the two captive screws at the right side of the light processor as illustrated. Use a 5 mm flat screw driver.
   Caution: *Prior to screwing ensure the reference blocks are pushed well up against there respective reference surfaces. Use your screw driver to tap gently on each block.*

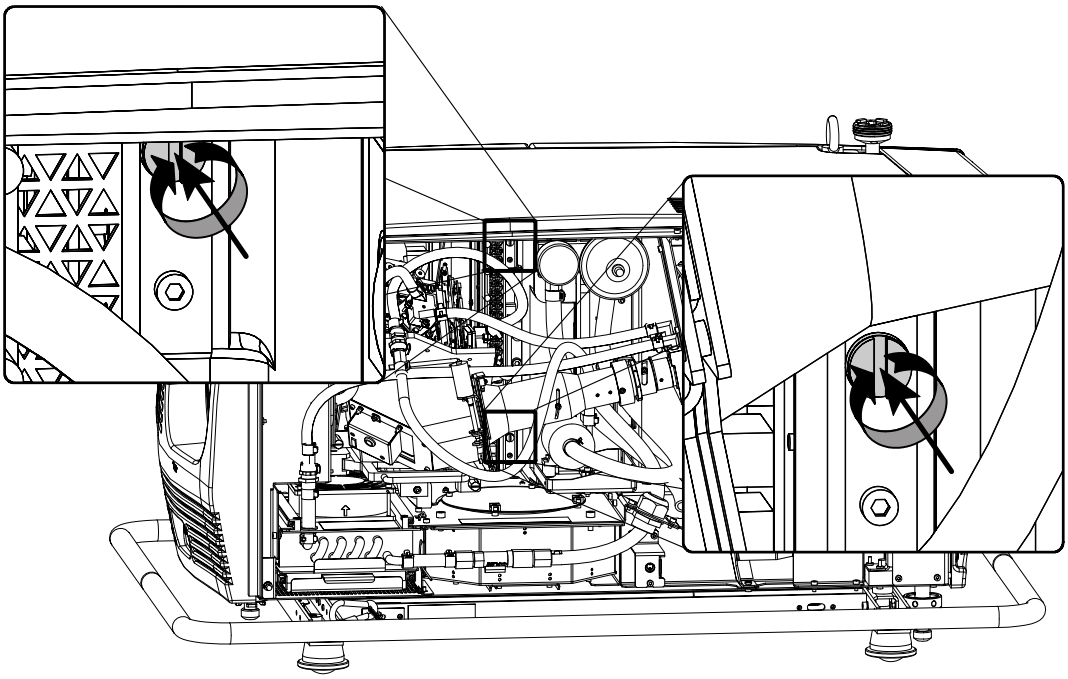

Image 2-14

4. Couple up the cooling circuit from the light processor with the cooling circuit of the projector.
   Caution: *To avoid damage to the connector seal, always depress the connector tab of the female valved fitting prior to inserting the male valved fitting.*

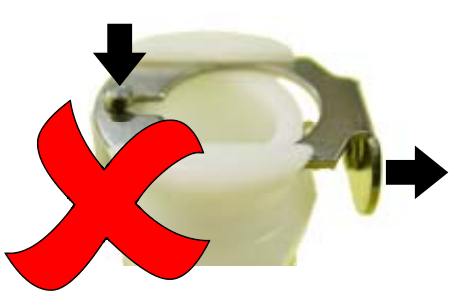

Caution: *Makes sure that the tube coming from the pump is leading to the cooling circuit of the DMD's and that the tube coming from the light pipe entrance is leading to the heat exchanger.*

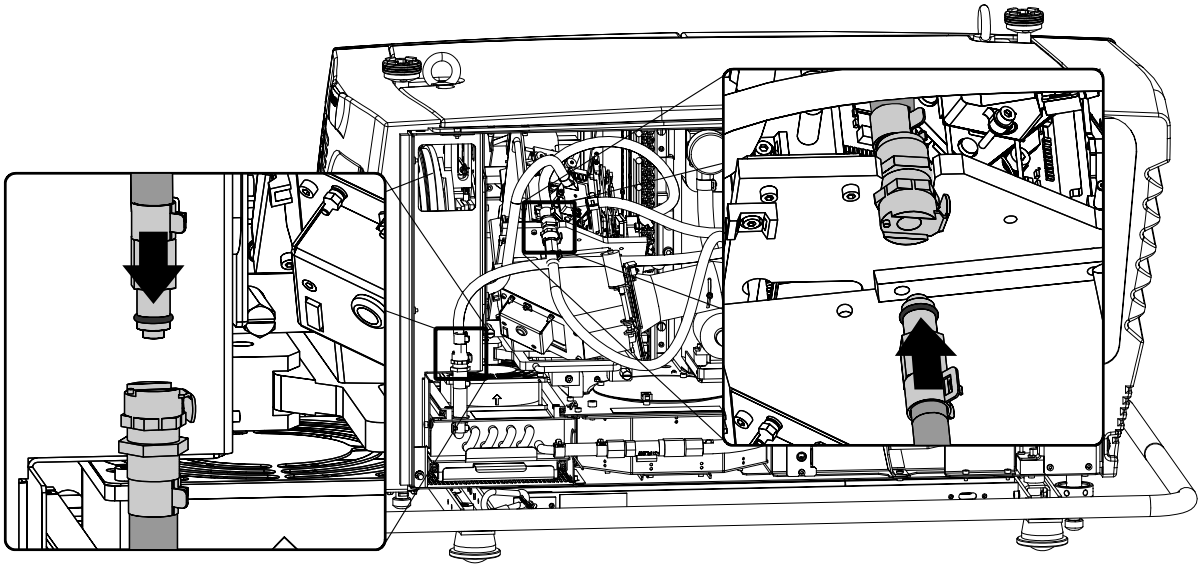

Image 2-15

5. Check the pressure indicated on the internal manometer of the liquid cooling circuit as per laid out in the manual of the liquid cooling refill kit.

Barco provides a liquid cooling refill kit for the FLM projector. Consult the manual of this kit for further instructions on how to obtain the correct pressure in the cooling circuit.

2.5 Adjusting the integration rod

Necessary tools

2 mm Allen key.

How to adjust the integration rod of the FLM projector ?

1. Remove the side cover if not removed yet. See owners manual of the FLM projector to remove the side cover.
2. Check if the set screws A and B are aligned. If not see procedure "Installing a new integration rod assembly", page 12, to align the set screws.

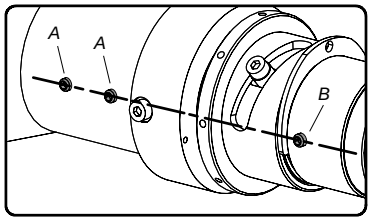

Image 2-16

3. Loosen the set screw B as illustrated. Use a 2 mm Allen key.

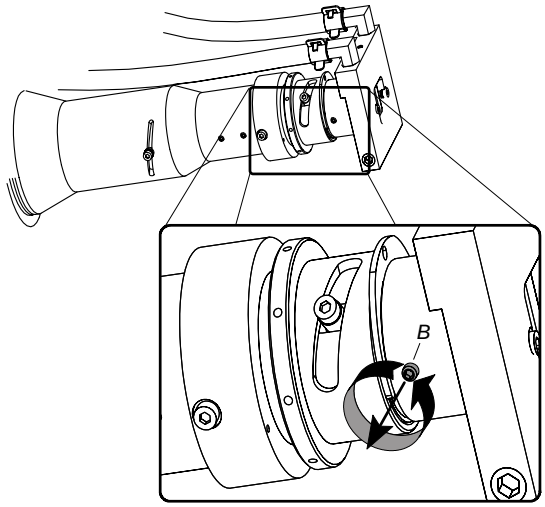

Image 2-17

4. Set up the projector using the local keypad to display a white internal pattern with a maximum contrast and a maximum dimming. Do not activate the lamp yet.
   a) Switch on the projector. Do not activate the lamp yet.
   b) Select : `Lamp > Power > Dimming > 0`
   c) Select : `Alignment > Contrast enhancement > High contrast`
   d) Select : `Alignment > Internal patterns > Full white screen`
   e) Make sure that you have a 2 mm Allen key within reach for the next steps.

   Caution: *Maximum five (5) seconds are allowed of minimum light output on an non-adjusted integration rod. Otherwise, the sealing between the DMD's and the prism will be damaged.*

5. Activate the lamp and zoom the projector lens in or out until the projected image is focused.
   Note: *Dialog windows must be displayed sharp instead of blurry. This is independent of the focus of the light beam.*

6. Gently rotate the adjustment ring D back or forward to a position which projects the sharpest possible edges on the screen.
   Tip: *Place a 2 mm Allen key in one of the holes on the outer side of the adjustment ring (D). The Allen key function as an extension bar of the adjustment ring. This allows a more precise adjustment.*

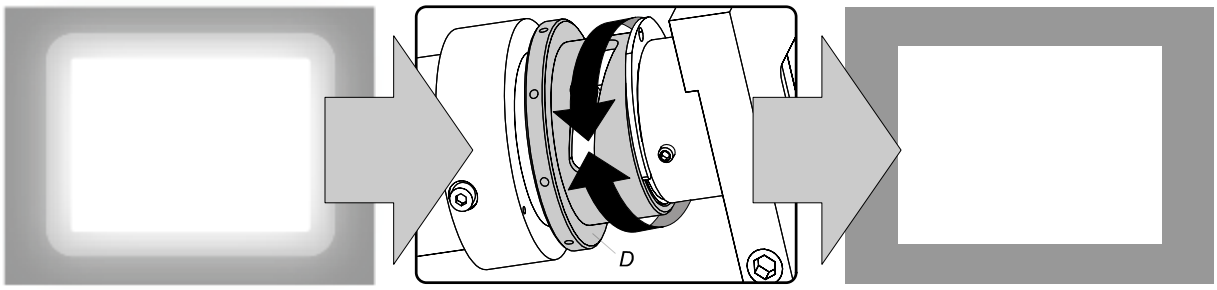

Image 2-18

7. Fasten the set screw B which you released in step 3.
8. Loosen the two set screws A as illustrated. Use a 2 mm Allen key.

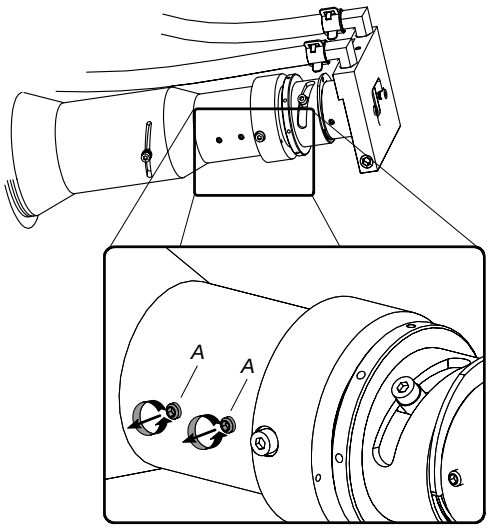

Image 2-19

9. Gently rotate the adjustment ring D until the projected light beam matches the projected outline of the DMD's.
   Note: *No spots in the projected image may move along with the movements of the rod. Spots which move with the movements of the rod indicates that the exit side of the integration rod is contaminated with dust. If this is the case, remove the integration rod and try to blow away the dust. If this doesn't help replace the integration rod.*

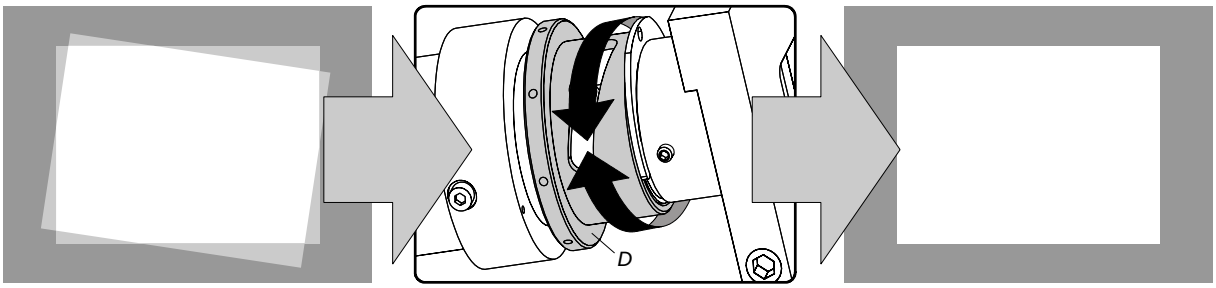

Image 2-20

10. Fasten the two set screws A which you released in step 8.

When you are familiar with this adjustment procedure you can optimize the focus position of the rod by first rotate the rod until you clearly see the sloped edges on the screen and then focusing these edges as sharp ad possible. Then rotate the rod back until the projected light beam matches the projected outline of the DMD's. This way of focusing the integration rod has to be done quickly. Otherwise, the sealing between the DMD's and the prism will be damaged.