115 VAC High Power Output Module

M/N 57C403

Instruction Manual J-3623-3

RELIANCE ELECTRIC

The information in this user's manual is subject to change without notice.

WARNING

THIS UNIT AND ITS ASSOCIATED EQUIPMENT MUST BE INSTALLED, ADJUSTED AND MAINTAINED BY QUALIFIED PERSONNEL WHO ARE FAMILIAR WITH THE CONSTRUCTION AND OPERATION OF ALL EQUIPMENT IN THE SYSTEM AND THE POTENTIAL HAZARDS INVOLVED. FAILURE TO OBSERVE THESE PRECAUTIONS COULD RESULT IN BODILY INJURY.

WARNING

INSERTING OR REMOVING THIS MODULE OR ITS CONNECTING CABLES MAY RESULT IN UNEXPECTED MACHINE MOTION. POWER TO THE MACHINE SHOULD BE TURNED OFF BEFORE INSERTING OR REMOVING THE MODULE OR ITS CONNECTING CABLES. FAILURE TO OBSERVE THESE PRECAUTIONS COULD RESULT IN BODILY INJURY.

CAUTION

THIS MODULE CONTAINS STATIC-SENSITIVE COMPONENTS. CARELESS HANDLING CAN CAUSE SEVERE DAMAGE.

DO NOT TOUCH THE CONNECTORS ON THE BACK OF THE MODULE. WHEN NOT IN USE, THE MODULE SHOULD BE STORED IN AN ANTI-STATIC BAG. THE PLASTIC COVER SHOULD NOT BE REMOVED. FAILURE TO OBSERVE THIS PRECAUTION COULD RESULT IN DEMAGE TO OR DESTRUCTION OF THIS EQUIPMENT.

Reliance® is a trademark of Reliance Electric Company or its subsidiaries.

Table of Contents

1.0 Introduction 1-1

2.0 Mechanical/Electrical Description 2-1
2.1 Mechanical Description 2-1
2.2 Electrical Description 2-1

3.0 Installation 3-1
3.1 Wiring 3-1
3.2 Initial Installation 3-1
3.3 Module Replacement 3-4

4.0 Programming 4-1
4.1 Register Organization 4-1
4.2 Configuration 4-1
4.3 Reading And Writing Data In Application Tasks 4-1
4.3.1 Ladder Logic Task Example 4-2
4.3.2 BASIC Task Example 4-2
4.3.3 Control Block Task Example 4-2

5.0 Diagnostics and Troubleshooting 5-1
5.1 Incorrect Data 5-1
5.2 Bus Error 5-2

Appendices

Appendix A
Technical Specifications A-1

Appendix B
Module Block Diagram B-1

Appendix C
Field Connections C-1

Appendix D
Related Components D-1

Appendix E
Defining Variables in the Configuration Task E-1

List of Figures

Figure 2.1 - Typical Output Circuit 2-1
Figure 2.2 - Module Faceplate 2-2

Figure 3.1 - Typical Field Signal Connections 3-2
Figure 3.2 - RC Suppression Network for Inductive Loads 3-3
Figure 3.3 - Rack Slot Numbers 3-3

Figure 4.1 - Organization of Register Bits 4-1

Module in a Local Rack E-1
Module in a Remote Rack E-3

1.0 INTRODUCTION

The products described in this instruction manual are manufactured or distributed by Reliance Electric Company or its subsidiaries.

This 115 VAC High Power Output Module will drive a maximum of sixteen 115 volt control signals as outputs from the DCS 5000/AutoMax system. The output signal frequency may be either 50 or 60 hertz. Individual outputs are rated at a maximum current of 2 amps. Outputs have high inrush capacity for handling capacitive loads. Output signals have 2500 volt isolation to logic common. The module contains four isolated commons, each having four outputs.

Typically, this module is used to output on/off signals to devices such as solenoids or motor starters that may need up to 2 amps current or have a large inrush current requirement.

This manual describes the functions and specifications of the module. It also includes a detailed overview of installation and servicing procedures, as well as examples of programming methods.

Related publications that may be of interest:

- J-3630 ReSource AutoMax PROGRAMMING EXECUTIVE INSTRUCTION MANUAL VERSION 1.0
- J-3649 AutoMax CONFIGURATION TASK MANUAL
- J-3650 AutoMax PROCESSOR MODULE INSTRUCTION MANUAL
- J-3675 AutoMax ENHANCED BASIC LANGUAGE INSTRUCTION MANUAL
- J-3676 AutoMax CONTROL BLOCK LANGUAGE INSTRUCTION MANUAL
- J-3677 AutoMax LADDER LOGIC LANGUAGE INSTRUCTION MANUAL
- J-3684 ReSource AutoMax PROGRAMMING EXECUTIVE INSTRUCTION MANUAL VERSION 2.0
- J-3750 ReSource AutoMax PROGRAMMING EXECUTIVE INSTRUCTION MANUAL VERSION 3.0
- IEEE 518 GUIDE FOR THE INSTALLATION OF ELECTRICAL EQUIPMENT TO MINIMIZE ELECTRICAL NOISE INPUTS TO CONTROLLERS FROM EXTERNAL SOURCES

2.0 MECHANICAL/ELECTRICAL DESCRIPTION

The following is a description of the faceplate LEDs, field termination connectors, and electrical characteristics of the field connections.

2.1 Mechanical Description

The output module is a printed circuit board assembly that plugs into the backplane of the DCS 5000/AutoMax rack. It consists of a printed circuit board, a faceplate, and a protective enclosure. The faceplate contains tabs at the top and bottom to simplify removing the module from the rack. Module dimensions are listed in Appendix A.

The faceplate of the module contains a female connector socket and 16 LED indicators that show the status of the outputs. Output signals leave the module via a multi-conductor cable (M/N 57C370). One end of this cable attaches to the faceplate connector, while the other end of the cable has stake-on connectors that attach to a terminal strip for easy field wiring. The faceplate connector socket and cable plug are keyed to prevent the cable from being plugged into the wrong module.

On the back of the module are two edge connectors that attach to the system backplane.

2.2 Electrical Description

The output module contains 16 output circuits for 115 volt control signals. Each group of four circuits shares a single isolated common. Output signals have 2500 volt isolation to logic common. Refer to the block diagram in Appendix B.

Each output circuit consists of a Triac with RC and MOV transient supression. The Triac gate driver is optically isolated from the output buffer. A circuit diagram is shown in figure 2.1.

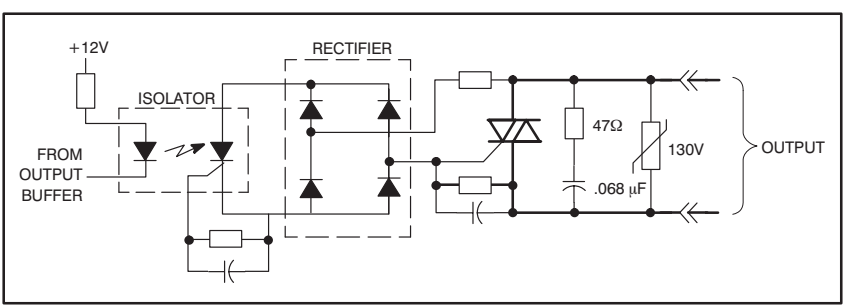

Figure 2.1 - Typical Output Circuit

There are 16 LEDs on the faceplate of the module. The LEDs are arranged in the same order as the output terminals on the faceplate. They are numbered sequentially from zero through fifteen, corresponding to the bits in the register. The LED indicators display

the status of the logic level circuitry. A lit LED indicates that data has been written to the output. See figure 2.2.

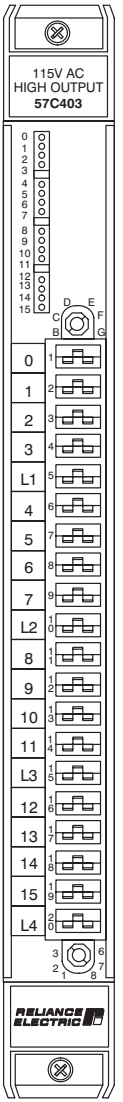

Figure 2.2 - Module Faceplate

3.0 INSTALLATION

This section describes how to install and remove the module and its cable assembly.

3.1 Wiring

The installation of wiring should conform to all applicable codes.

To reduce the possibility of electrical noise interfering with the proper operation of the control system, exercise care when installing the wiring from the system to the external devices. For detailed recommendations refer to IEEE 518.

3.2 Initial Installation

Use the following procedure to install the module:

Step 1. Turn off power to the system. All power to the rack as well as all power to the wiring leading to the module should be off.

Step 2. Mount the terminal strip (M/N 57C370, 61C505, or 61C506) on a panel. The terminal strip should be mounted to permit easy access to the screw terminals on the terminal strip. Make certain that the terminal strip is close enough to the rack so that the cable will reach between the terminal strip and the module.

Step 3. Fasten field wires to the terminal strip. Note that the bit number and wire number are not the same. Typical field signal connections are shown in figure 3.1. Refer to Appendix C for the arrangement of terminal strip connections. Make certain that all field wires are securely fastened.

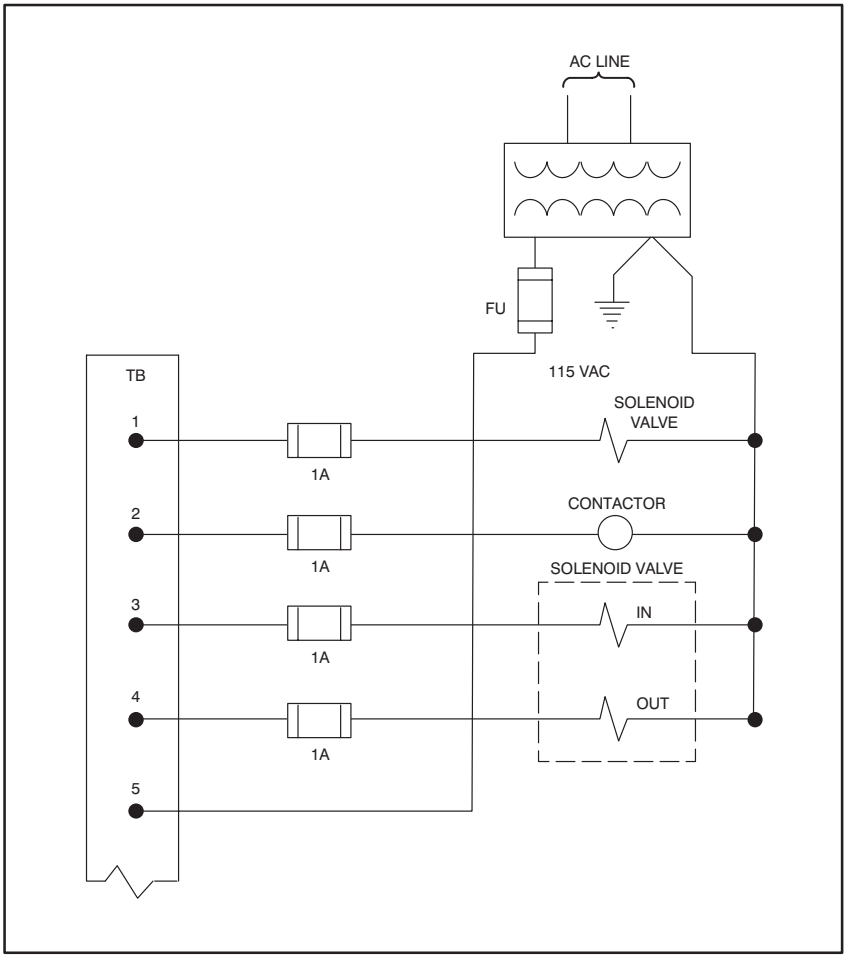

Figure 3.1 - Typical Field Signal Connections

Step 4. If the device to which you are connecting the output module contains an inductive load, install an RC suppression network across the output terminals of the device. If this is not done, the output module may not always function correctly. Refer to figure 3.2.

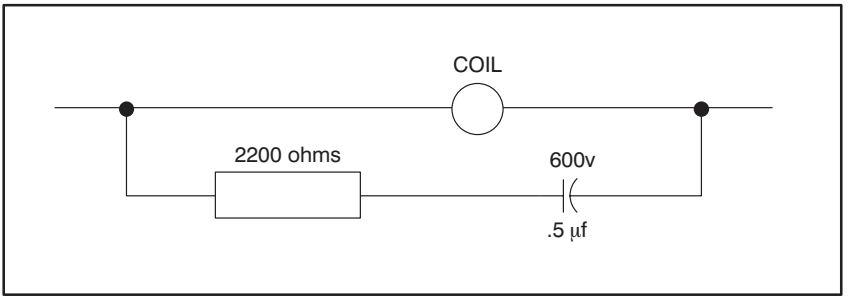

Figure 3.2 - RC Suppression Network for Inductive Loads

Step 5. Take the module out of its shipping container. Take it out of the anti-static bag, being careful not to touch the connectors on the back of the module.

Step 6. Insert the module into the desired slot in the rack. Use a screwdriver to secure the module into the slot. Refer to figure 3.3.

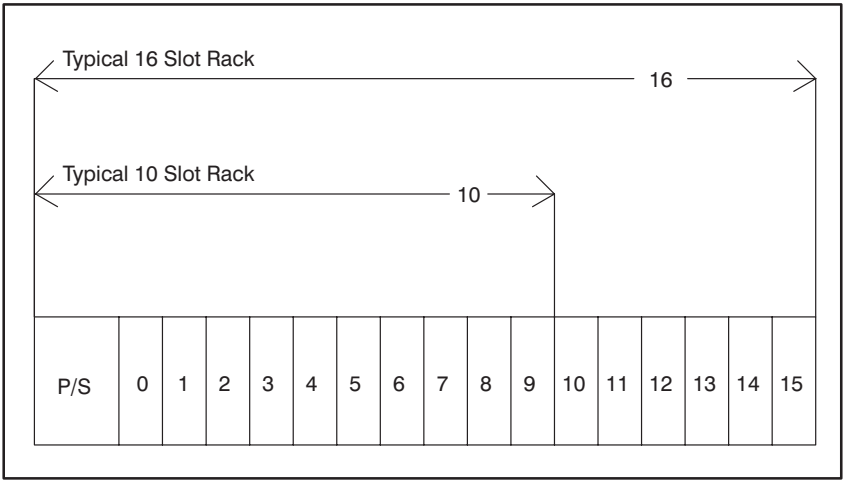

Figure 3.3 - Rack Slot Numbers

Step 7. Attach the field terminal connector (M/N 57C370, 61C505, or 61C506) to the mating half on the module. Make certain that the connector is the proper one for this module. Use a screwdriver to secure the connector to the module.

Note that both the module and the terminal strip connector are equipped with “keys.” These keys should be used to prevent the wrong cable from being plugged into a module in the event that the connector needs to be removed for any reason and then reattached later.

At the time of installation, rotate the keys on the module and the connector so that they can be connected together securely. It is recommended that, for each module so equipped, the keys on each successive module in the

rack be rotated one position to the right of the keys on the preceding module.

If you use this method, the keys on a particular connector will be positioned in such a way as to fit together only with a specific module, and there will be little chance of the wrong connector being attached to a module.

Step 8. Turn on power to the system.

Step 9. Verify the installation by connecting the programming terminal to the system and running the ReSource Software.

Stop all programs that may be running.

Use the I/O MONITOR function. If the module is in a local rack, enter the module slot number and register (always 0).

If the module is in a remote rack, enter the slot number of the master remote I/O module, remote I/O drop number (also called the remote rack number), output module slot number, and register (always 0).

One at a time, toggle each of the bits that have been wired to output devices to verify that the installation has been completed correctly.

WARNING

BE CAREFUL WHEN WRITING TO THE OUTPUTS TO INSURE THAT NO UNEXPECTED MACHINE MOTION WILL RESULT. FAILURE TO OBSERVE THIS PRECAUTION COULD RESULT IN BODILY INJURY OR DAMAGE TO EQUIPMENT.

3.3 Module Replacement

Use the following procedure to replace a module:

Step 1. Turn off power to the rack and all connections.

Step 2. Use a screwdriver to loosen the screws holding the connector to the module. Remove the connector.

Step 3. Loosen the screws holding the module to the rack. Remove the module from the slot in the rack.

Step 4. Place the module in the anti-static bag it came in, being careful not to touch the connectors on the back of the module. Place the module in the cardboard shipping container.

Step 5. Take the new module out of the anti-static bag, being careful not to touch the connectors on the back of the module.

Step 6. Insert the module into the desired slot in the rack. Use a screwdriver to secure the module into the slot.

Step 7. Attach the field terminal connector (M/N 57C370, 61C505, or 61C506) to the mating half on the module. Make certain that the connector keys are oriented correctly and that the connector is the proper one for this module (see step 7 in 3.2 Initial Installation). Use a screwdriver to secure the connector to the module.

Step 8. Turn on power to the rack.

4.0 PROGRAMMING

This section describes how data is organized in the module and provides examples of how the module is accessed by the application software. For more detailed information, refer to the AutoMax Enhanced BASIC Language Instruction Manual (J-3675).

4.1 Register Organization

The data in the module is organized as one 16 bit register. The software allows you to define the module as a single register (up to 16 bits) by referencing the entire module as a unit, or as up to 16 individual bits by referencing each of the bits separately. Refer to figure 4.1.

	15	14	13	12	11	10	9	8	7	6	5	4	3	2	1	0
register 0	RW	RW	RW	RW	RW	RW	RW	RW	RW	RW	RW	RW	RW	RW	RW	RW

Figure 4.1 - Organization of Register Bits

4.2 Configuration

Before any application programs can be written, it is necessary to configure, or set, the definitions of system-wide variables, i.e. those that must be globally accessible to all tasks.

For DCS 5000 and AutoMax Version 2.1 and earlier, you define system-wide variables by writing a Configuration task. For AutoMax Version 3.0 and later, you define system-wide variables using the AutoMax Programming Executive. After these variables are defined, you can generate the configuration file automatically, which eliminates the requirement to write a configuration task for the rack. If you are using AutoMax Version 2.1 or earlier, refer to Appendix E for examples that show how to define variables in the configuration task. If you are using AutoMax Version 3.0 or later, see the AutoMax Programming Executive (J-3750) for information about configuring variables.

4.3 Reading And Writing Data In Application Tasks

In order for an output module to be referenced by application software, it is first necessary to assign symbolic names to the physical hardware. In AutoMax Version 2.1 and earlier, this is accomplished by either IODEF or RIODEF statements in the configuration task. In AutoMax Version 3.0 and later, you assign symbolic names using the Programming Executive.

Each application program that references the symbolic names assigned to the module in configuration must declare those names COMMON.

The frequency with which tasks, or application programs, read their inputs and write their outputs depends on the language being used.

Ladder logic and control block tasks read inputs once at the beginning of each scan and write outputs once at the end of each scan. BASIC tasks read an input and write an output for each reference throughout the scan.

4.3.1 Ladder Logic Task Example

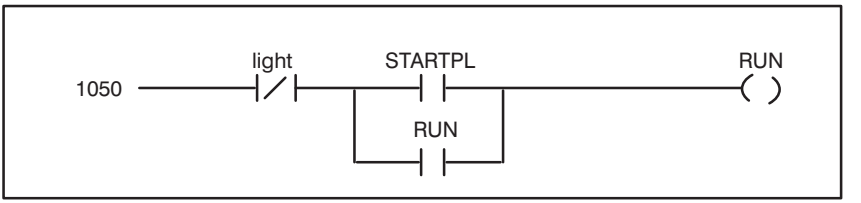

The symbolic names RUN and STARTPL reference the output modules that were defined in the configuration. The trailing at symbol “@” is not used in ladder logic tasks. The symbolic name “light” is local to the ladder logic task and does not have I/O associated with it.

4.3.2 BASIC Task Example

```
1000    LOCAL   LIGHT@                \!Fault light
1010    COMMON  STARTPL@             \!Start Command
2000    COMMON  RUN@                 \!Line run
3000    !
4000    !
5000    RUN@ = NOT LIGHT@ AND ( STARTPL@ OR
        RUN@)
5500    !
6000    END
```

The symbolic names RUN@ and STARTPL@ reference the output modules that were defined in the configuration. The symbolic name LIGHT@ is local to the BASIC task and does not have I/O associated with it.

4.3.3 Control Block Task Example

```
2400    COMMON STARTPL@              \!Start command
2500    LOCAL MOMENTARY@             \!Momentary output
3000    !
4000    !
5000    CALL TRANSITION( INPUT=MOMENTARY@,
        OUTPUT=STARTPL@)
5500    !
6000    END
```

The symbolic name STARTPL@ references the output module that was defined in the configuration. The symbolic name MOMENTARY@ is local to the control block task and does not have I/O associated with it.

5.0 DIAGNOSTICS AND TROUBLESHOOTING

This section explains how to troubleshoot the module and field connections.

5.1 Incorrect Data

Problem: The device connected to theoutput is either always off, always on, or acting different than expected. The possible causes of this are a module in the wrong slot, a programming error, or a malfunctioning module. It is also possible that the output is either not wired or wired to the wrong device. Use the following procedure to isolate the problem:

Step 1. Verify that the output module is in the correct slot and that the I/O definitions are correct.

Refer to figure 3.2. Verify that the slot number being referenced agrees with the slot number defined in the configuration. Verify that the register number is 0. Verify that the bit number refers to the proper bit. Note that the bit number and the wire number are not the same.

For remote I/O installations, also verify that the master slot and remote drop number are defined correctly.

Step 2. Verify that the power supply is functional.

Stop all tasks that may be running.

Confirm that all connections at the terminal strip are tight. Connect a voltmeter to the power supply connections on the terminal strip. If the voltage is not correct, there is a problem with the power supply or the wiring to the terminal strip.

Check the cable for continuity between the faceplate connector and the terminal strip.

Step 3. Verify that the module can be accessed.

Connect the programming terminal to the system and run the ReSource Software.

Stop all tasks that may be running.

Use the I/O MONITOR function. Toggle the output device and determine whether the bit is changing state by observing the condition of the LED on the module. If the LED does not change state, the hardware is malfunctioning.

WARNING

BE CAREFUL WHEN WRITING TO THE OUTPUTS TO INSURE THAT NO UNEXPECTED MACHINE MOTION WILL RESULT. FAILURE TO OBSERVE THIS PRECAUTION COULD RESULT IN BODILY INJURY OR DAMAGE TO EQUIPMENT.

Step 4. Verify that the output circuit on the module is working correctly.

Connect a voltmeter to the proper points on the terminal strip and continue to toggle the output device from the I/O MONITOR. The voltmeter should alternate between 0 and the line voltage. If this does not happen, the output circuit is malfunctioning.

Step 5. Verify that the user application program is correct.

Verify that the application program that references the symbolic names associated with the module has declared those names COMMON.

Verify that the symbolic name in question is being referenced in the application program. This can be done indirectly with the VARIABLE MONITOR in the programmer.

Step 6. Verify that the hardware is working correctly.

Verify the hardware functionality by systematically swapping out modules. After each swap, if the problem is not corrected, replace the original module before swapping out the next module.

- To test local I/O, first replace the output module. Next, replace the processor module(s). If the problem persists, take all of the modules out of the backplane except one processor module and the output module. If the problem is now corrected, one of the other modules in the rack is malfunctioning. Reconnect the other modules one at a time until the problem reappears. If none of these tests reveals the problem, replace the backplane.
- To test remote I/O, first verify that the remote I/O system is communicating with the drop that contains the output module being tested. Next, by systematically swapping out modules, determine whether the output module is the only module that is not working. If more than one module is not working correctly, the problem most likely lies in the remote I/O system.
- To test the remote rack, first replace the output module. Next, replace the slave remote I/O module. If the problem persists, take all of the modules out of the remote backplane except the slave remote I/O module and the output module. If the problem is now corrected, one of the other modules in the rack is malfunctioning. Reconnect the other modules one at a time until the problem reappears. If the problem proves to be neither in the remote I/O system nor the remote rack, try replacing the remote backplane.

5.2 Bus Error

Problem: A “31” or “51” through “58” appears on the processor module’s LED. This error message indicates that there was a bus error when the system attempted to access the module. The possible causes of this error are a missing module, a module in the wrong slot, or a malfunctioning module. It is also possible that the user has attempted to write to the wrong registers on the module. Refer to the AutoMax Procesor Module Instruction Manual (J-3650) for more information. Use the following procedure to isolate a bus error:

Step 1. Verify that the output module is in the correct slot and that the I/O definitions are correct.

Refer to figure 3.2. Verify that the slot number being referenced agrees with the slot number defined in the configuration task. Verify that the register number is 0. Note that the bit number and the wire number are not the same.

For remote I/O installations, also verify that the master slot and remote drop number are defined correctly.

Step 2. Verify that the module can be accessed.

Connect the programming terminal to the system and run the ReSource Software.

Stop all programs that may be running.

Use the I/O MONITOR function to display register 0. If the programmer is able to monitor the outputs, then attempt to write to the outputs.

WARNING

BE CAREFUL WHEN WRITING TO THE OUTPUTS TO INSURE THAT NO UNEXPECTED MACHINE MOTION WILL RESULT. FAILURE TO OBSERVE THIS PRECAUTION COULD RESULT IN BODILY INJURY OR DAMAGE TO EQUIPMENT.

If the programmer cannot read and write to the outputs, the problem lies in the hardware.

Step 3. Verify that the hardware is working correctly.

Verify the hardware functionality by systematically swapping out the output module, the processor module(s), and the backplane. After each swap, if the problem is not corrected, replace the original item before swapping out the next item.

For remote I/O installations, systematically swap out the output module, the slave remote module, and the backplane. After each swap, if the problem is not corrected, replace the original item before swapping out the next item.

Appendix A

Technical Specifications

Ambient Conditions

- Storage temperature: −40°C - 85°C
- Operating temperature: 0°C - 60°C
- Humidity: 5-90% non-condensing

Maximum Module Power Dissipation

- 30 Watts

Dimensions

- Height: 11.75 inches
- Width: 1.25 inches
- Depth: 7.375 inches

System Power Requirements

- +5 volts: 1200 ma

Output Circuit

- Number of outputs: 16
- Maximum operating voltage: 132 volts rms
- On state voltage drop: 1.5 volts at 2 amps
- Peak Current for 20 msec: 20 amps
- Maximum inrush (1 sec): 5 amps
- Maximum continuous current: 2 amps per output
4 amps per common
16 amps per module
- Maximum leakage current: 4 ma
- Maximum Fuse rating: 5 amps per common
- Four inputs per isolated common
- 2500 volt isolation between outputs and logic common

Appendix B

Module Block Diagram

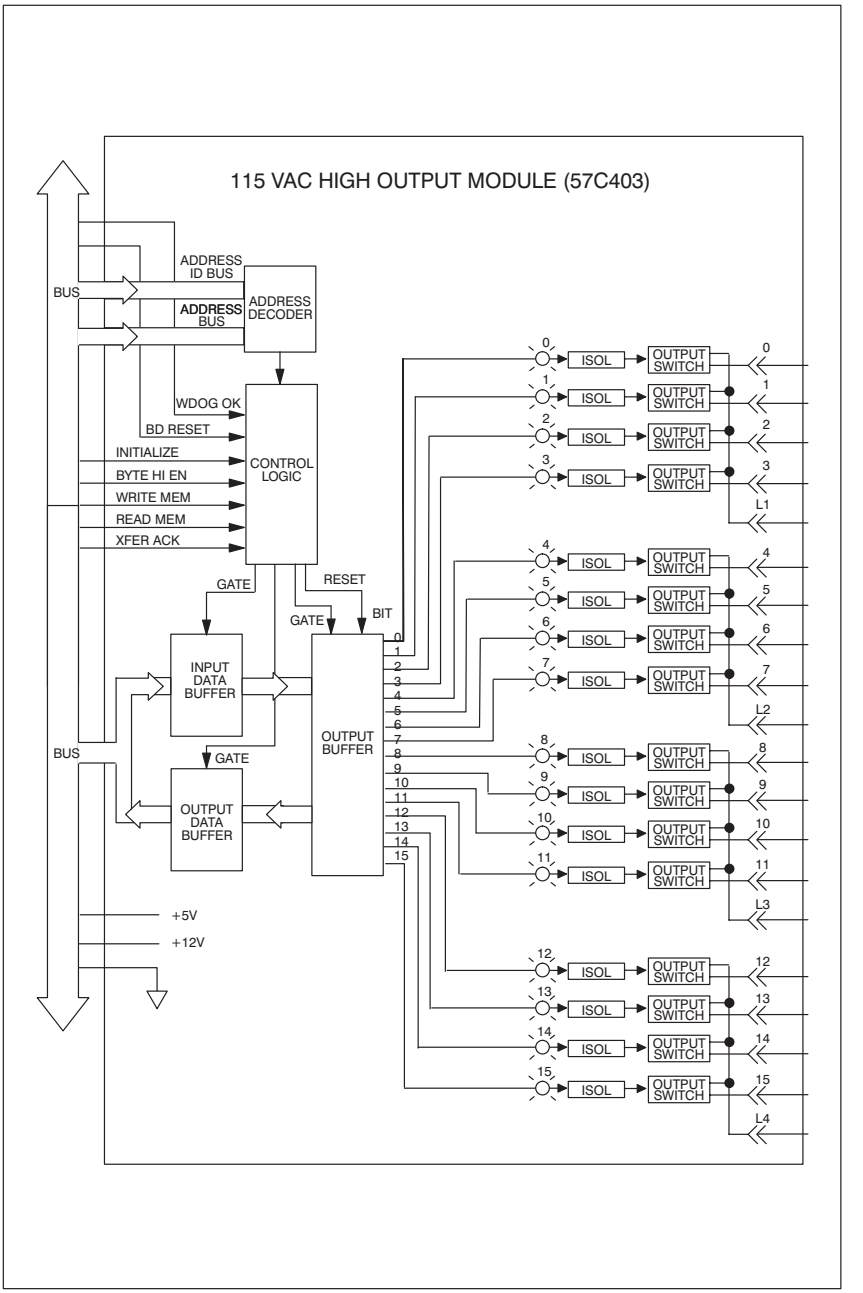

Appendix C

Field Connections

Terminal Board Number	Reg. 0 Bit
1	0
2	1
3	2
4	3
5 L1	
6	4
7	5
8	6
9	7
10 L2	
11	8
12	9
13	10
14	11
15 L3	
16	12
17	13
18	14
19	15
20 L4	

Appendix D

Related Components

57C370 – Terminal Strip/Cable Assembly

This assembly consists of a NEMA-style terminal strip, cable, and mating connector. It is used to connect field signals to the faceplate of the output module.

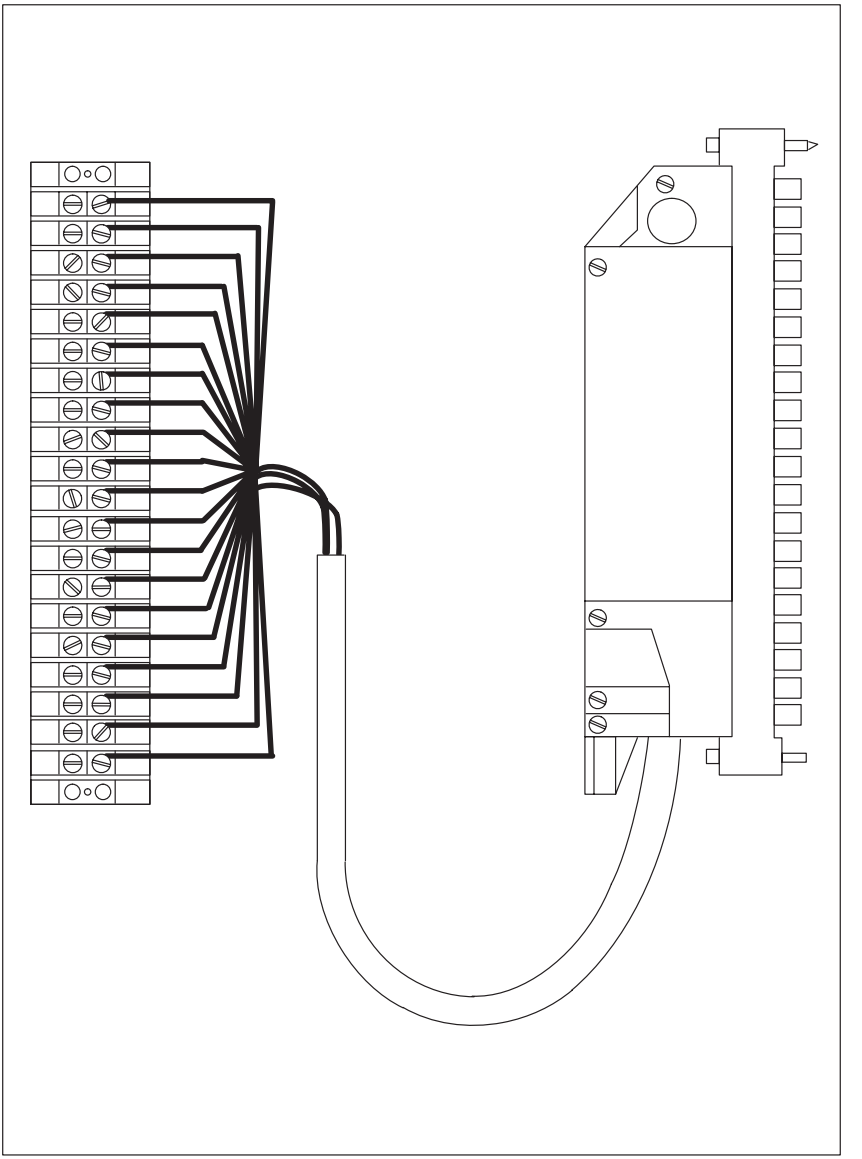

Appendix D

(Continued)

61C505 – DIN-Style Terminal Strip/Cable Assembly (Fused)

This assembly consists of a DIN-style terminal strip with fuses, cable, and mating connector. It is used to connect field signals to the faceplate of the output module.

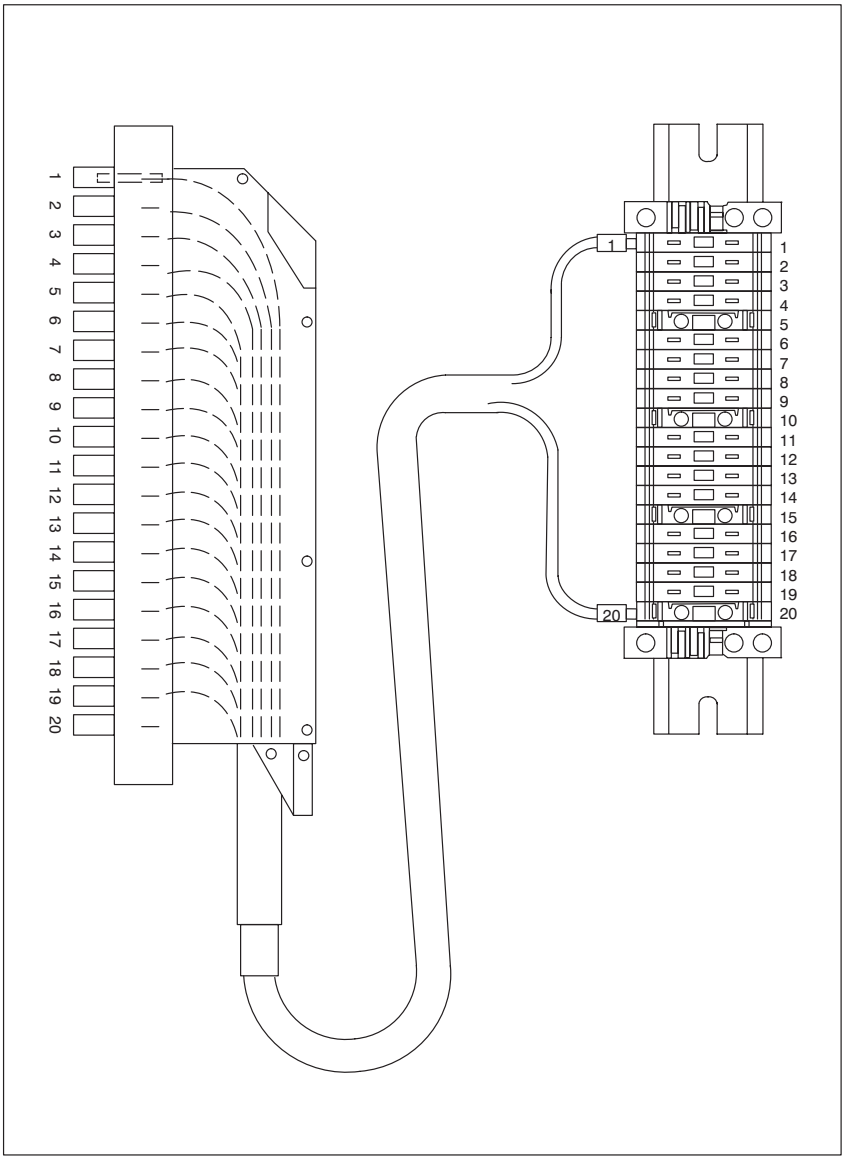

Appendix D

(Continued)

61C506 – DIN-Style Terminal Strip/Cable Assembly (Unfused)

This assembly consists of a DIN-style terminal strip with fuses, cable, and mating connector. It is used to connect field signals to the faceplate of the output module.

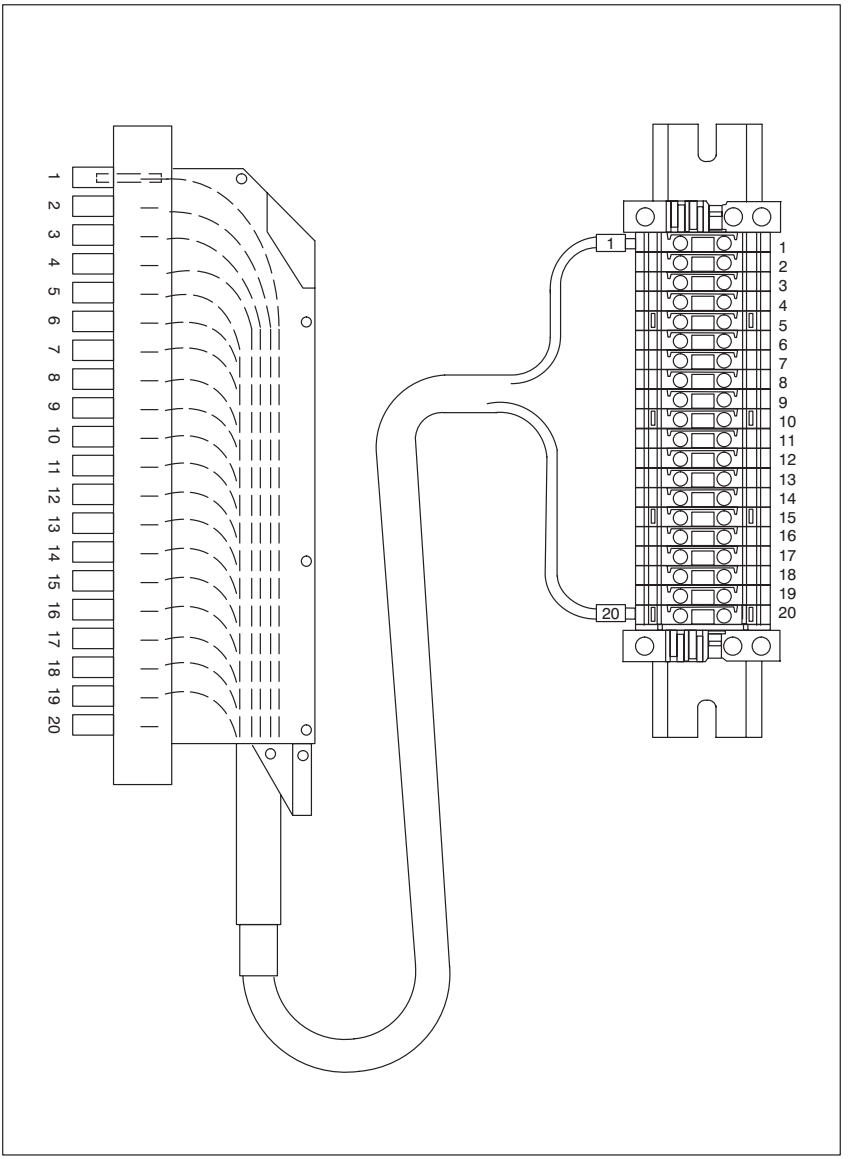

Appendix E

Defining Variables in the Configuration Task

Local I/O Definition

This section describes how to configure the output module when it is located in the same rack (i.e., the local rack) as the processor module that is referencing it. Refer to the figure below. Note that this procedure is used only if you are using the AutoMax Programming Executive software version 2.1 or earlier.

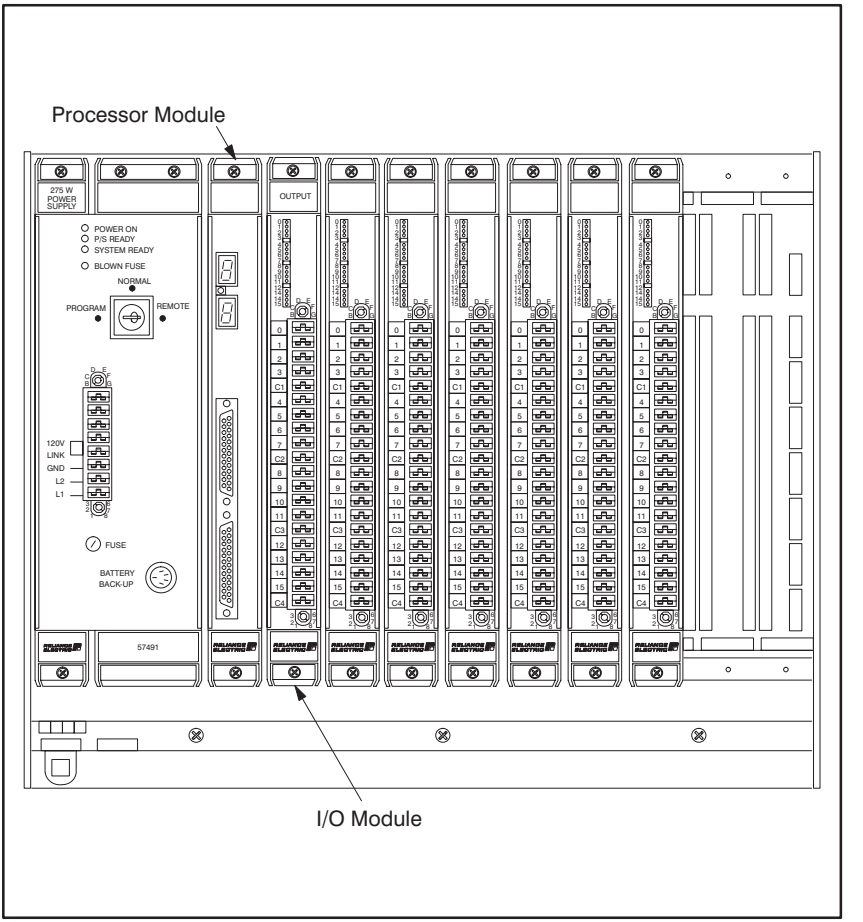

Module in a Local Rack

Single Register Reference

Use the following method to reference all 16 outputs as a single register. Only one statement is required in the configuration task for the entire module. The symbolic name of the register should be as meaningful as possible:

nnnnn IODEF SYMBOLIC_NAME%[SLOT=s, REGISTER=0]

Bit Reference

Use the following method to reference individual outputs on the module. For the entire module, a maximum of 16 statements can be included in the configuration task (one for each bit). The symbolic name of each bit should be as meaningful as possible:

nnnnn IODEF SYMBOLIC_NAME@[SLOT=s, REGISTER=r, BIT=b]

where:

nnnnn - BASIC statement number. This number may range from 1-32767.

SYMBOLIC_NAME% - A symbolic name chosen by the user and ending with (%). This indicates an integer data type and all references will access the entire module.

SYMBOLIC_NAME@ - A symbolic name chosen by the user and ending with (@). This indicates a boolean data type and all references will access bit number “b” only.

SLOT - Slot number that the module is plugged into. This number may range from 0-15.

REGISTER - Always zero for this module.

BIT - Used with boolean data types only. Specifies the bit in the register that is being referenced. This number may range from 0-15.

Examples Of Local I/O Definitions

The following statement assigns the symbolic name DISPLAY% to the output module located in slot 4:

1020 IODEF DISPLAY%[SLOT=4, REGISTER=0]

The following statement assigns the symbolic name RUN@ to bit 9 on the output module located in slot 7:

2050 IODEF RUN@[SLOT=7, REGISTER=0, BIT=9]

Remote I/O Definition

This section describes how to configure the output module when it is located in a rack that is remote from the processor module referencing it. Refer to the figure below.

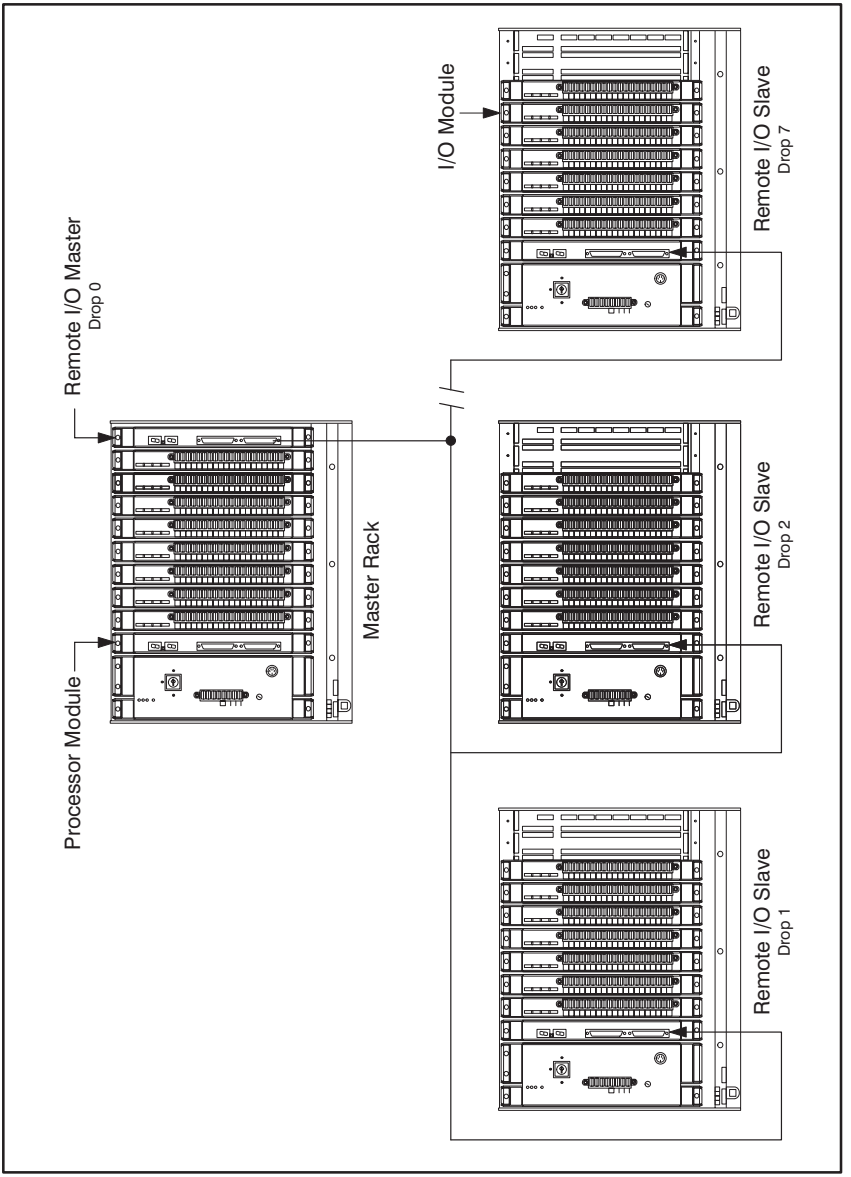

Module in a Remote Rack

Single Register Reference

Use the following method to reference all 16 outputs as a single register. Only one statement is required in the configuration task for the entire module. The symbolic name of the register should be as meaningful as possible:

nnnnn RIODEF SYMBOLIC_NAME%[MASTER_SLOT=m, DROP=d, SLOT=s, REGISTER=0]

Bit Reference

For the entire module, a maximum of 16 statements can be included in the configuration task (one for each bit). The symbolic name of each bit should be as meaningful as possible:

nnnnn RIODEF SYMBOLIC_NAME@[MASTER_SLOT=m, DROP=d, SLOT=s, REGISTER=0, BIT=b]

where:

nnnnn - BASIC statement number. This number may range from 1-32767.

SYMBOLIC_NAME% - A symbolic name chosen by the user and ending with (%). This indicates an integer data type and all references will access the entire module.

SYMBOLIC_NAME@ - A symbolic name chosen by the user and ending with (@). This indicates a boolean data type and all references will access bit number “b” only.

MASTER_SLOT - Slot number that the master remote I/O module is plugged into. This number may range from 0-15.

DROP - Drop number of the slave remote I/O module that is in the same rack as the input module. This number may range from 1-7.

SLOT - Slot number that the module is plugged into. This number may range from 0-15.

REGISTER - Always zero for this module.

BIT - Used with boolean data types only. Specifies the bit in the register that is being referenced. This number may range from 0-15.

Examples Of Remote I/O Definitions

The following statement assigns the symbolic name LEVEL% to the output module located in slot 4 of remote I/O drop 3. This remote drop is connected to the remote I/O system whose master is located in slot 15 in the master rack:

1020 RIODEF LEVEL% [MASTER_SLOT=15, DROP=3, SLOT=4, REGISTER=0]

The following statement assigns the symbolic name STARTPL@ to bit 9 on the output module located in slot 7 of remote I/O drop 2. This remote drop is connected to the re-
mote I/O system whose master is located in slot 6 in the master rack.

2050 RIODEF STARTPL@[MASTER_SLOT=6, DROP=2, SLOT=7, REGISTER=0, BIT=9]

For additional information

1 Allen-Bradley Drive
Mayfield Heights, Ohio 44124 USA
Tel: (800) 241-2886 or (440) 646-3599
http://www.reliance.com/automax

www.rockwellautomation.com

Corporate Headquarters
Rockwell Automation, 777 East Wisconsin Avenue, Suite 1400, Milwaukee, WI, 53202-5302 USA, Tel: (1) 414.212.5200, Fax: (1) 414.212.5201

Headquarters for Allen-Bradley Products, Rockwell Software Products and Global Manufacturing Solutions
Americas: Rockwell Automation, 1201 South Second Street, Milwaukee, WI 53204-2496 USA, Tel: (1) 414.382.2000, Fax: (1) 414.382.4444
Europe/Middle East/Africa: Rockwell Automation SA/NV, Vorstlaan/Boulevard du Souverain 36, 1170 Brussels, Belgium, Tel: (32) 2 663 0600, Fax: (32) 2 663 0640
Asia Pacific: Rockwell Automation, 27/F Citicorp Centre, 18 Whitfield Road, Causeway Bay, Hong Kong, Tel: (852) 2887 4788, Fax: (852) 2508 1846

Headquarters for Dodge and Reliance Electric Products
Americas: Rockwell Automation, 6040 Ponders Court, Greenville, SC 29615-4617 USA, Tel: (1) 864.297.4800, Fax: (1) 864.281.2433
Europe/Middle East/Africa: Rockwell Automation, Brühlstraße 22, D-74834 Elztal-Dallau, Germany, Tel: (49) 6261 9410, Fax: (49) 6261 17741
Asia Pacific: Rockwell Automation, 55 Newton Road, #11-01/02 Revenue House, Singapore 307987, Tel: (65) 6356-9077, Fax: (65) 6356-9011

Publication J-3623-3 - July 1993

Copyright © 2002 Rockwell Automation, Inc.. All rights reserved. Printed in U.S.A.