# Installation and

# Operation Guide


KMD-5205
LanLite Controller


KMD-5270
WebLite Controller

c UL us LISTED

## Important notices



Printed in U.S.A.

## Disclaimer

The material in this manual is for information purposes only. The contents and the product it describes are subject to change without notice. KMC Controls, Inc. makes no representations or warranties with respect to this manual. In no event shall KMC Controls, Inc. be liable for any damages, direct or incidental, arising out of or related to the use of this manual.

**KMC Controls**

P.O. Box 497
19476 Industrial Drive
New Paris, IN 46553
U.S.A.
TEL: 1.574.831.5250
FAX: 1.574.831.5252
E-mail: info@kmccontrols.com

# Contents

## Section 1

### About the controllers



## Section 2

### Installing the controllers



## Section 3

### Operating the controller



## Section 4

### Configuration and programming

# Section 5

## Using a web browser (KMD-5270 models only)

# SECTION 1

## About the controllers

This section provides a description and specifications—including the BACnet and Modbus options—for models KMD-5205 LANLite and KMD-5270 WebLite controllers. Safety information is included also. Review this material before installing or operating the controllers.

### Introduction

The KMD-5205 and KMD-5270 both provide programmable control and high-level LAN connectivity for facilities management systems. These powerful, direct-digital-controllers operate on a peer-to-peer, token passing protocol, using either Ethernet or EIA-485 networks.

- Ethernet for KMD Tier 1 controllers and optional BACnet 8802.3 devices.
- EIA-485 for either KMD Tier 2 or Modbus RTU controllers

The operating software in the controllers use a high level, easy to learn programming language to ensure reliability, rapid programming and compatibility with future KMC system enhancements.

### Internet operation

KMD-5270 models only

The embedded internet server in the KMD-5270 models make them ideal controllers for schools and businesses with an Ethernet infrastructure. System operation can be changed using a standard internet browser such as Netscape or Microsoft® Internet Explorer. In addition to changing settings, you can view system groups, trend and runtime logs with the browser.

### BACnet 8802-3 option

Models with the BACnet option adds open-system functionality to these controllers.

- BACnet devices see input, output and variables in the controller as BACnet input, output and value objects.
- When installed on the same Ethernet broadcast domain segment as a BACnet 8802-3 network, use Control Basic to retrieve data from any accessible BACnet object on the internetwork.

### Modbus option

Connect directly to Modbus RTU equipment with the Modbus option. Modbus registers are mapped to variables in the controller that are then available for use by other KMD controllers, BACnet devices or Control Basic.

## Specifications

Specifications for the KMD-5205 and KMD-5270 series of controllers are subject to change without notice.

| | |
|---|---|
| **Inputs** | 8 universal inputs |
| **Key features** | Software selectable for analog or digital signals. Standard and custom units of measure. Pull-up resistors for switch contacts and other unpowered equipment. |
| **Connector** | Removable screw terminal block, wire size 12–22 AWG |
| **Conversion** | 12-bit analog–to–digital |
| **Pulse Counting** | Up to 1000 Hz |
| **Input impedance** | 100 kΩ without pull-up resistors |
| **Analog input range** | 0–5 volts DC, 4–20 milliamperes DC |
| **Digital input range** | 0–5 volts DC and pulse counting |
| **Pull-up resistors** | None, 1kΩ and 10kΩ selected with movable jumper |
| **Outputs** | 8 universal outputs |
| **Key features** | Software programmable for analog or digital signals. Standard and custom units of measure. Slots for KMC output override boards |
| **Connector** | Removable screw terminal block, wire size 12–22 AWG |
| **Conversion** | 12-bit digital-to-analog |
| **Analog output range** | 0–10 volts DC, 50 milliamperes maximum |
| **Programmable features** | |
| **Control Basic programs** | 10 user-definable program areas |
| **Networked points in** | 127 from Tier 1 controllers<br>512 from Tier 2 controllers |
| **Networked points out** | 64 to Tier 1 controllers<br>64 to Tier 2 controllers |
| **PID control loops** | 8 PID control loops |
| **Program variables** | 256 — Software selectable as analog or digital with standard and custom units of measure |
| **Time keeping** | Real-time clock with power backup for 72 hours.<br>Programmable for automatic daylight saving time by date, day of month and time of day. |
| **Tables** | 5 user defined |
| **Schedules** | |
| **Weekly schedules** | 8 each with 2 override days |
| **Annual schedules** | 4 |

| | |
|---|---|
| **Logging** | |
| **Trend logs** | 16 trend logs each supporting up to 6 analog, digital or virtual elements or points. Trend logs displayed as text or graphics. |
| **Runtime logs** | 16 runtime logs with time and date stamp and cumulative runtime |
| **Custom graphics** | 32 system groups each of which can manage 64 points with animated and color graphics. Requires WinControl XL Plus to view and edit graphics.<br><br>KMD-5270 models serves the background system group graphic to browser accessible web pages. |
| **Security** | Six operator access levels<br>256 names with passwords |
| **Alarms** | Alarm buffering up to 16 alarms<br>On-board 68-character alarm or maintenance text messages |
| **Memory** | |
| **Flash memory** | 2 megabyte non-volatile flash memory |
| **Ram** | 2 megabyte with six-hour backup<br>Programs and program parameters are stored in non-volatile memory. |
| **Communication ports** | |
| **Ethernet** | One Ethernet 10Base-T port for KMD Tier 1 and optional BACnet 8802.3 |
| **RS-485** | Connects to either KMC Tier 2 or Modus RTU controllers.<br>Connector type is removable screw terminal block. Wire size 14–22 AWG |
| **Serial** | Serial 9-pin connector for directly connecting to a computer serial port *or* optional external modem for remote operation. |

| | |
|---|---|
| **Supported network protocols** | |
| **KMDigital** | All WebLite controllers support connections to controllers on KMDigital networks.<br>**Tier 1**—10Base-T Ethernet port supports connection to 31 KMC Tier 1 controllers.<br>**Tier 2**—Supports connections to 64 KMDigital controllers on the RS–485 port. KMD Tier 2 is not available on models with Modbus RTU protocol. |
| **BACnet** | Connects to the BACnet internetwork as a BACnet Ethernet 8802.3 device. |
| **Modbus** | Supports connection to Modbus slave controllers over the RS-485 port.<br>RS-485, half-duplex (2-wire)<br>9600, 19,200 or 38,400 baud. |
| **Power loss** | Automatic restart on power failure |
| **Compatibility** | |
| **Software** | For full feature capability use WinControl XL Plus 2.1 or later. |
| **Controllers** | Compatible with Tier 1 controllers firmware build 2.0 or a later release. |
| **Regulatory** | UL 916 Energy Management Equipment<br>FCC Class A, Part 15, Subpart B<br>CE mark |
| **Internet** | (KMD-5270 models only) |
| **Browser access** | Use a standard internet browser to view and change the following: Inputs. Outputs, Variables, Controllers, System Groups, Trend Logs, Run Time Logs, Weekly and Annual Schedules, Alarm Summary. |
| **E-mail** | Requires access to SMTP e-mail server with static IP address. Sends text messages, logs and data points. |
| **Supply voltage** | 24 volts AC, –15%, +20% 25 VA |
| **Environmental limits** | |
| **Operating** | 32 to 120°F (0 to 49°C) |
| **Shipping** | –40 to 140°F (–40 to 60°C) |
| **Humidity** | 0–95% non-condensing relative humidity |
| **Weight** | 16 ounces (454 grams) |

## Dimensions

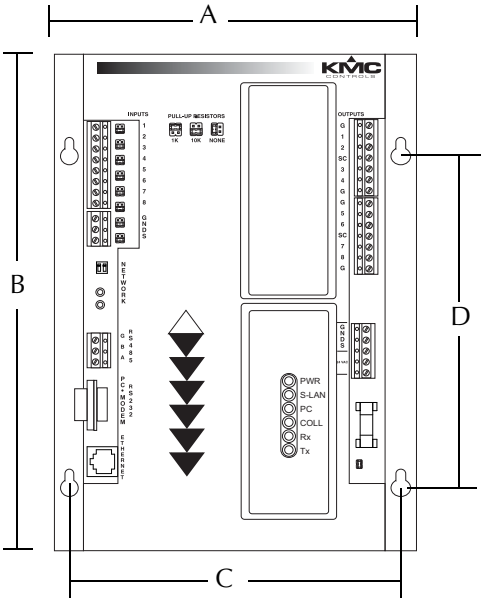


***Table 1-1 Mounting dimensions***

| A | B | C | D | Height (not shown) |
|---|---|---|---|---|
| 6.56 in. | 9.00 in. | 6.00 in. | 6.00 in. | 0.98 in. |
| 167 mm | 229 mm | 152 mm | 152 mm | 25 |

## Models and options

See Table 1-2 on page 10 for available models and protocols.

***Table 1-2 Available models***

| Model | Protocol | | | | |
|---|---|---|---|---|---|
| | **KMD Tier 1** | **KMD Tier 2** | **Browser enabled** | **BACnet 8802.3** | **Modbus RTU** |
| KMD-5205 | ◆ | ◆ | | | |
| KMD-5205-005 | ◆ | | | | ◆ |
| KMD-5205-006 | ◆ | | | ◆ | ◆ |
| KMD-5270 | ◆ | ◆ | ◆ | | |
| KMD-5270-001 | ◆ | ◆ | ◆ | ◆ | |
| KMD-5270-005 | ◆ | | ◆ | | ◆ |
| KMD-5270-006 | ◆ | | ◆ | ◆ | ◆ |

## Accessories and replacement parts

The following accessories and replacement parts are available from KMC Controls, Inc.

**Output override boards**

| | |
|---|---|
| **HPO-6701** | Triac output |
| **HPO-6702** | Short protected analog output |
| **HPO-6703** | Relay, normally open contacts |
| **HPO-6704** | 4–20mA current loop |
| **HPO-6705** | Relay, normally closed contacts |
| **HPO-6802** | Cover for output boards |

**Power transformer**

| | |
|---|---|
| **XEE-6111-40** | Single-hub 120 volt transformer |
| **XEE-6112-40** | Dual-hub 120 volt transformer |

**Connecting cables**

| | |
|---|---|
| **KMD-5673** | Six-foot computer-to-controller cable |
| **KMD-5674** | six-foot modem-to-controller cable |

**Replacement parts**

| | |
|---|---|
| **902-600-05** | Fast-acting, 1.6 Ampere 5 x 20 mm fuse |
| **HPO-0054** | FUSE BULB 863-617-03 (10/Pkg Min Qty) |
| **HPO-0063** | 2-PIN KMD JUMPER (5/Pkg Min Qty) |

## Controls and connections

Before installing a KMD-5205 or KMD-5270, take some time to become familiar with the location of the components of the controller.

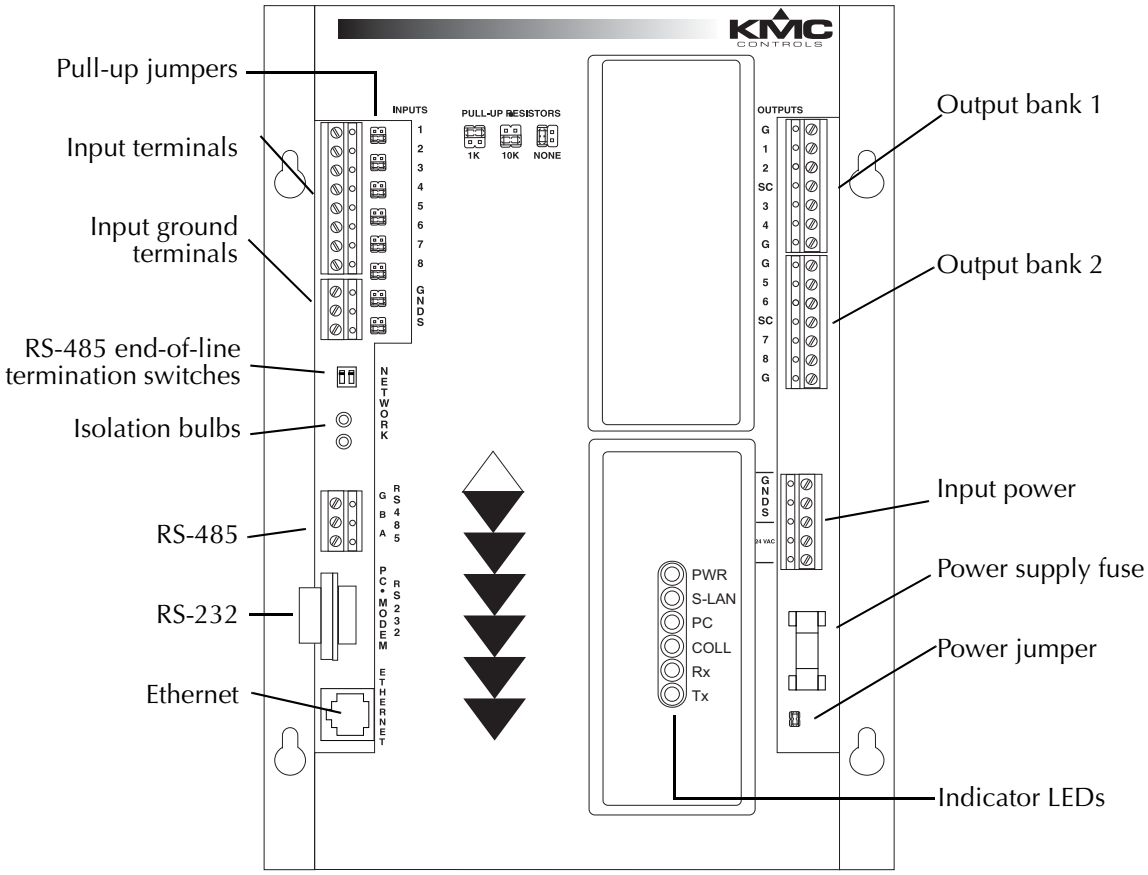


***Illustration 1-1 Control and connection terminal locations***

## Safety considerations

KMC Controls assumes the responsibility for providing you a safe product and safety guidelines during its use. Safety means protection to all individuals who install, operate, and service the equipment as well as protection of the equipment itself. To promote safety, we use hazard alert labeling in this manual. Follow the associated guidelines to avoid hazards.

### Danger

Danger represents the most severe hazard alert. Bodily harm or death will occur if danger guidelines are not followed.

### Warning

Warning represents hazards that could result in severe injury or death.

### Caution

Caution indicates potential personal injury or equipment or property damage if instructions are not followed.

**Note**

Notes provide additional information that is important.

**Detail**

Provides programing tips and shortcuts that may save time.

### Danger

# SECTION 2

## Installing the controllers

This section provides important guidelines for installing KMC direct digital controllers. Review this information carefully for proper installation.

### Mounting

Mount the controller inside of a metal enclosure. KMC Controls recommends using a UL-approved Enclosed Energy Management Equipment Panel such as a KMC model HCO-1034, HCO-1035 or HCO-1036. Insert #6 hardware through the two mounting holes on each side of the controller to securely fasten it to a flat surface. See *Dimensions* on page 9 for mounting hole locations and dimensions. To maintain RF emission specifications, use either shielded connecting cables or enclose all cables in conduit.

### Connecting inputs

The controllers include eight universal inputs. Each input can be configured with software to receive either analog or digital signals. By using the optional pull-up resistors, either passive or active devices may be connected to the inputs. For additional information, see the application note AN0504L, *Connecting inputs and outputs to KMC controllers*.

#### Pull-up resistors

For passive input signals, such as thermistors or switch contacts, use a pull-up resistor. For KMC thermistors and most other applications place the moveable jumper in the *10K* position.

#### 4–20 mA inputs

To use a 4–20 current loop input, connect a 250 ohm resistor from an input to ground. The resistor will convert the current input to a voltage which can be read by the controller analog-to-digital converter. Place the moveable pull-up jumper in the *NONE* position.

#### Pulse inputs

Connect pulse inputs under the following conditions:

- If the pulse input is a passive input such as switch contacts, then place the input pull-up jumper to the *10K* position.
- If the pulse is an active voltage (up to a maximum of +5 volts DC), then place the input pull-up jumper in the *NONE* position.

### Ground terminals

Three input ground terminals are located next to the input terminals. Up to two wires, size 12–22 AWG, can be clamped into each ground terminal. If more than two wires must be joined at a common point, use an external terminal strip to accommodate the additional wires.

## Connecting outputs

All eight outputs are universal and can be configured by software to operate either analog or digital devices. Connect the device under control between the output terminal and one of the ground (G) terminals on the same bank.

### Override cards

For large relays or devices that cannot be powered directly from a standard output, install an output override card. Override cards provide:

- A wide choice of output signals.
- A slide switch for automatic or manual control.
- An LED for assessment of the output state.

Install the output override cards in the area under the plastic cover next to the output terminals. The following output cards are available from KMC Controls.

***Table 2-1 Output override cards***

| Card model number | Output type |
|---|---|
| HPO-6701 | Triac |
| HPO-6702 | 0–10 volts DC analog |
| HPO-6703 | Normally open contact |
| HPO-6704 | 4–20 milliampere current loop |
| HPO-6705 | Normally closed contact |

### Grounds and Switched Commons

When using an output override card, use the *SC* terminal instead of the ground (G) terminal as signal common. Use the *SC* terminal in the same output bank as the output terminal.

## Connecting to networks

Each controller in a KMC digital network may be used as either a stand-alone controller or connected to other controllers in a network. The KMD-5205 and KMD-5270 controllers can be connected to other KMC controllers through two different types of networks.

- Connections to KMD Tier 1 controllers and BACnet 8802–3 devices use standard Ethernet wiring and hardware.
- KMD Tier 2 controllers and Modbus controllers use EIA–485 wiring and hardware.

## KMC Tier 1 networks

### LAN connections

Connect a standard Ethernet cable between the *Ethernet* connector on the controller and a port on a network hub or router. You may connect up to 31 Tier 1 controllers in a system using Ethernet. In addition to allowing the maximum LAN controllers, multiple computers can access the system through the network. See *Initializing with HCM* on page 27 for Ethernet configuration.

## KMC Tier 2 networks

Connect KMC Tier 2 controllers to a KMD-5205 or KMD-5270 at the RS-485 connector. The KMC Tier 2 network uses shielded twisted pair cable to connect controllers together. See *Initializing with HCM* on page 27 for configuring a controller for Tier 2 network operation.

**Note**

KMD Tier 2 controllers cannot be connected to KMD-5205 or KMD-5270 when the Modus option is enabled.

## Tier 2 wiring

You may connect up to 64 KMDigital controllers to the RS–485 connector. Use approved shielded cable and the following principles when connecting a controller to a Tier 2 (sub LAN) network:

- Use 18 gauge, twisted pair, shielded cable with capacitance of no more than 50 picofarads per foot for all network wiring. Belden cable model #82760 meets the cable requirements.
- Connect the *A* terminal in parallel with all other A or -A terminals.
- Connect the B terminal in parallel with all other B or +B terminals.
- Connect the shields of the cable together at each controller.
- Connect the shield to an earth ground at the other end.
- Use a KMD–5575 repeater if the cable length will exceed 4000 feet (1220 meters). Use no more than seven repeaters per Tier 2 network.
- Place a KMD–5567 surge surpressor in the cable where it exits a building.

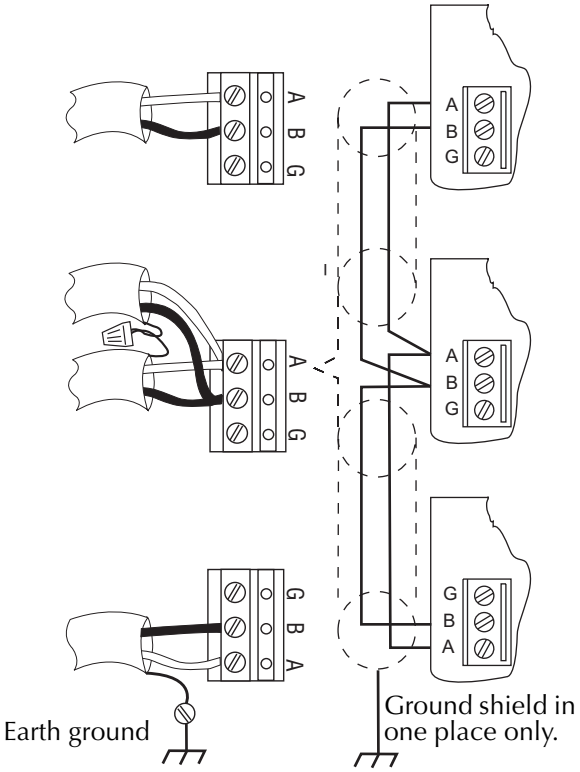


***Illustration 2-1 Connecting controllers to a Tier 2 network***

## Tier 2 end of line termination switches

The controllers on the physical ends of the RS-485 wiring segment must have end-of-line termination installed for proper network operation. Set the end-of-line termination to *On* using the *EOL* switches. The KMD-5205 and KMD-5270 end-of-line termination is set with two switches located near the RS–485 connector. Termination in other KMC controllers may be set with moveable jumpers or fixed resistors.

**Note**

Set the End-of-Line termination at the controllers where only one wire is attached to the A and B terminals.

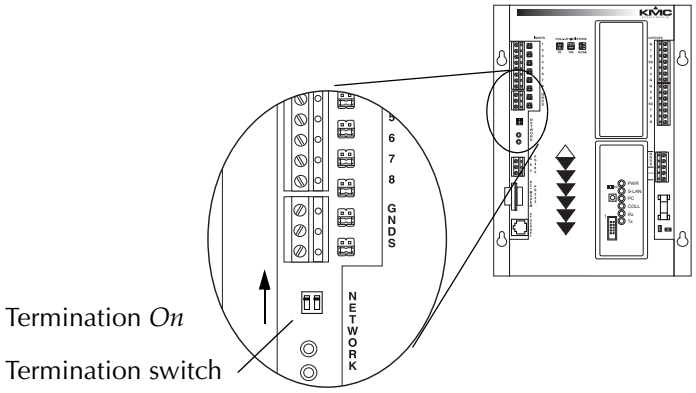


***Illustration 2-2 Termination switches***

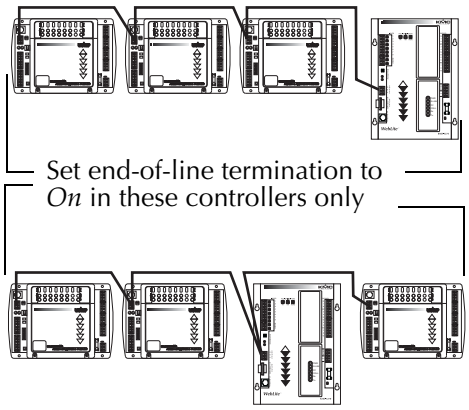


***Illustration 2-3 End-of line termination***

## BACnet 8802-3 (optional)

Connect models with the BACnet option to the BACnet internetwork through the same Ethernet 10Base-T connection as the Tier 1 connection. For access to devices on a BACnet internetwork you must do the following:

- The BACnet internetwork must include at lease one 8802-3 network.
- The controller must be connected to the same Ethernet broadcast domain segment as one of the BACnet 8802-3 networks.
- If the internetwork does not include an 8802-3 network, install a router to route traffic from the existing BACnet network protocols to Ethernet 8802-3. For internetworks that include MS/TP or BAcnet IP, use a BAC-5050. For addition details on BACnet networks, see application note AN0404A, *Planning BACnet Internetworks*, which is available on the KMC web site.

## Modbus (optional)

Connect Modus slave controllers to a KMD-5205 or KMD-5270 at the RS-485 connector. The Modbus network uses shielded twisted pair cable to connect controllers together. To set up the controller, see *Initializing with HCM* on page 27 and *Setting up for Modbus networks* on page 32 for configuration details.

### Modbus wiring

Connect Modbus slave devices to the *RS-485* connector. Use approved shielded cable and the following principles when connecting a controller to a Modbus network:

- Use 18 gauge, twisted pair, shielded cable with capacitance of no more than 50 picofarads per foot for all network wiring. Belden cable model #82760 meets the cable requirements.
- Connect the *A* terminal of the KMD controller in parallel with the minus (-) terminals on the Modbus devices.
- Connect the *B* terminal of the KMD controller in parallel with the plus (+) terminals on the Modbus devices.
- Connect the shields of the cable together at each controller.
- Connect the shield to an earth ground at one end only.
- Place a KMD-5567 surge surpressor in the cable where it exits a building.

**Note**

In addition to these Modus wiring requirements, verify equipment specific Modbus wiring requirements in the manuals supplied with the Modus devices.

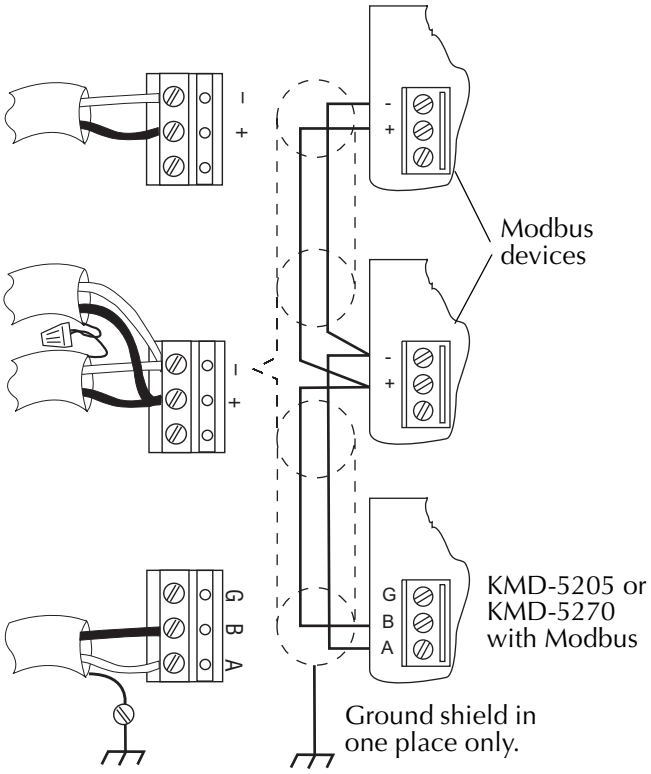


***Illustration 2-4 Connecting the Modbus network***

### Modbus end-of-line termination switches

The controllers on the physical ends of the Modus wiring segment must have end-of-line termination installed for proper network operation. For the KMD controllers the end-of-line termination is set with two switches located near the RS-485 connector. Set the end-of-line termination to *On* using the *EOL* switches. End-of-line termination for the connected Modbus devices may be set with moveable jumpers or fixed resistors. Verify termination methods for the Modbus devices in the manuals supplied with the Modbus devices.

**Note**

Set the end-of-line termination at the controllers where only one wire pair is attached to the *A* and *B* terminals.

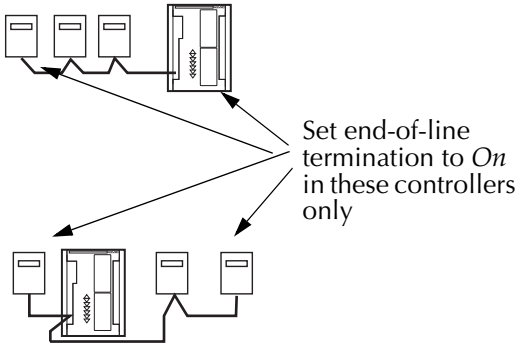


***Illustration 2-5 End-of-line termination***

## Connecting power

The controllers require an external, 24 volt, AC power source. Use the following guidelines when choosing and wiring transformers.

- Use a KMC Controls Class–2 transformer of the appropriate size to supply power to the controllers.
- When installing a controller in a system with other controllers, you may power multiple controllers with a single transformer as long as the total power drawn from the transformer does not exceed its rating and phasing is correct.
- If several controllers are mounted in the same cabinet, you can share a transformer between them provided the transformer *does not exceed* 100 VA or any regulatory requirements.
- Do not run 24 volt, AC power from within an enclosure to external controllers.

## Connecting to a computer through the serial port

Multiple computers may access the same controller at the same time. However, unpredictable operation may occur if two or more operators are making simultaneous changes.

To initialize or address the controller with the KMC Hardware Configuration Manager or to program with WinControl XL Plus, connect a KMD-5673 cable between a serial port on the computer and the RS-232 port on the controller.

- See Illustration 2-6 for cable details.
- See the section *Configuration and programming* on page 27 for procedures on initializing and programming the controller.

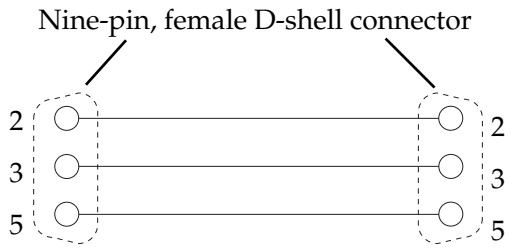


***Illustration 2-6 Computer to controller cable***

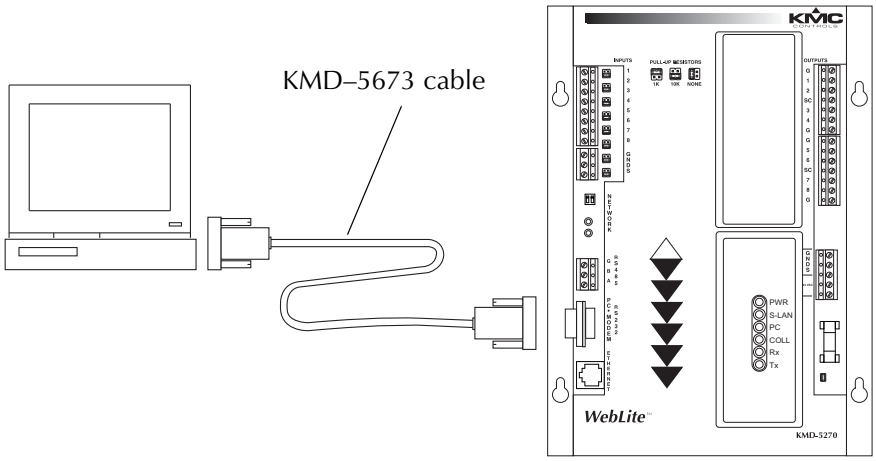


***Illustration 2-7 Direct connection to KMD-5205 and KMD-5270***

## Connecting to a modem

By adding an optional modem to the controller, an off-site computer can access the controller through a dial-up connection. The modem connection also supports dial-in and the Control Basic functions *TPAGE* and *NPAGE*. If the modem function is enabled, the serial port is not available for direct connection with a computer.

**Detail**

KMC Controls recommends using U.S. Robotics modems for off-site communications. KMC does not offer support for other modem installations.

To install a modem:

1. Use HCM to configure the controller for the modem function. See *Initializing with HCM* on page 27 for setup details.
2. Connect a KMD-5674 computer-to-modem cable between the KMD-5569 modem and the nine-pin modem connector on the controller.
3. Connect the modem to a telephone line dedicated to the network system.
4. Verify the configuration switches on the back of the modem are in the following positions.

***Table 2-2 Modem configuration switches***

| 1 | 2 | 3 | 4 | 5 | 6 | 7 | 8 |
|---|---|---|---|---|---|---|---|
| Up | Up | Down | Down | Up | Up | Up | Down |

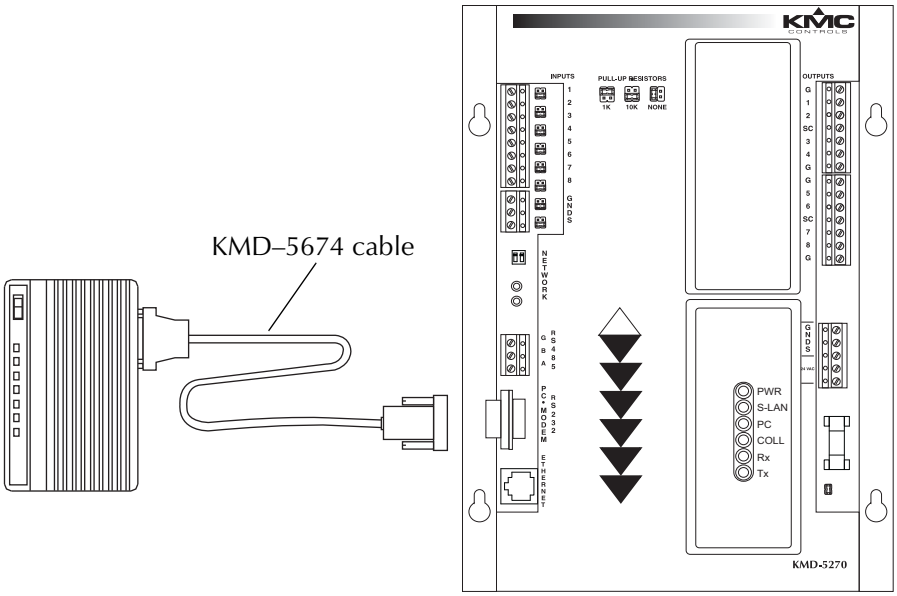


***Illustration 2-8 Modem connection to KMD-5205 and KMD-5270***

**Detail**

Use only the KMD-5674 cable between the controller and the modem. A standard modem cable will not work.

# SECTION 3

## Operating the controller

This section provides general operating parameters of your KMC controller and a detailed description of the front panel display.

### Lights and indicators

#### Isolation bulbs

Two small bulbs located next to the RS-485 connector are protective isolation bulbs for the Tier 2 networks. These bulbs serve three functions:

- When illuminated they indicate improper network phasing. Improper phasing occurs when the ground potential of the controller is higher than the phase or the ground potential of other Tier 2 or Modbus controllers on the network.
- The bulbs protect the controller from damage by limiting the network signal. If voltage or current exceeds safe operating condition, the bulbs will open the connections between the controller and the network.
- By pulling the bulbs from their sockets you can disconnect the controller from the network.

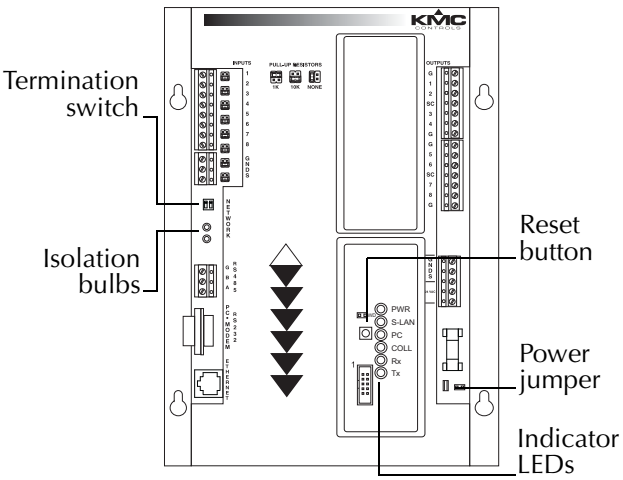


***Illustration 3-1 Controls and indicators***

### LED indicators

Six LEDs on the front of the controller display system status. Use the LEDs to confirm proper operation or as an aid when troubleshooting.

**PWR** Flashes green during normal operation. The normal cycle is one second on and one second off.

**S-LAN** Momentarily flashes yellow during the time when data is being transmitted to either the KMD Tier 2 network controllers or to the connected Modbus devices.

**PC** Flashes when sending or receiving data from a computer.

**COL** Momentarily flashes red when a collision occurs in Ethernet traffic.

**Rx** Flashes green when Ethernet traffic is being received.

**Tx** Flashes green when Ethernet traffic is being transmitted.

## Powering the controller

Use the jumper located next to the power terminal to disconnect the 24 volt AC power from the controller while making wiring changes. Remove the power terminal or disconnect the power feeding the transformer before removing the controller. The controller begins operation as soon as power is applied.

## Maintenance

The controller does not require routine maintenance. If cleaning is required, wipe with a soft, damp cloth and mild soap.

## Replacing the fuse

If a fuse opens, investigate the cause, and then replace the fuse. To replace the fuse:

1. Remove the power connection to the module.
2. Carefully pull out the open fuse from the fuse holder.
3. Carefully snap an identical 1.6 ampere, fast-acting, fuse into the fuse holder.
4. Reconnect the power.

## Resetting the controller

Use the reset button for either of the following functions.

- Restore the modem settings.
- Restore all configuration settings to the factory default settings.

**Caution**

Restoring the controller erases all programs and point configuration. Connect to the controller through Ethernet or a dial-up modem and use either WinControl XL Plus or TotalControl to save the programming in a panel file before resetting the controller.

### To restore only the modem settings

A controller that has been set for modem operation with HCM cannot directly connect to a computer at the RS–232 port unless it is changed with the reset button.

To change the controller from modem connection to direct computer connection do the following:

1. Remove the plastic cover surrounding the six LEDs.
2. Press the reset button for one second and then release it.

### Restoring to factory settings

Restoring a controller to factory settings changes the controller as follows:

- Removes all programming.
- Removes all configuration settings.
- Restores the controller to factory default settings.

**Caution**

Resetting the controller erases all configuration and programming. After resetting to factory settings, you must configure and program the controller to establish normal communications and operation.

To reset the controller to factory settings.

1. If possible, use WinControl XL Plus or TotalControl Design Studio to backup the controller.
2. Remove the plastic cover surrounding the six LEDs.
3. Remove the power jumper. See the illustration *Controls and indicators* on page 23 for the location.
4. Press and hold the red restart button.
5. Replace the power jumper while continuing to hold the restart button.
6. Release the restart button when the SUBLAN and PC LEDs illuminate.

# SECTION 4

## Configuration and programming

This section lists initialization settings and describes programming functions that are unique to configuring the KMD-5205 and KMD-5270 controllers. Other programming features and more detailed instructions are covered in the *WinControl XL User's Plus Reference Manual*.

### Initializing with HCM

Before a controller is placed into service, it must be initialized and addressed with the KMC *Hardware Configuration Manager* (HCM) software. HCM is distributed on the WinControl XL software CD; complete operating instructions are included in the Hardware Configuration Manager help files or the *HCM Reference Guide* available on the KMC Controls web site.

**Caution**

The Hardware Configuration Manager sets all controllers on the Tier 2 network to the same parameters. To prevent disruption to other controllers on the network, disconnect the network cables at the RS-485 port or remove the isolation bulbs on the controller prior to starting HCM.

**Note**

Ethernet settings do not take effect in a controller until the power is cycled.

1. Unplug the Tier 2 or Modbus network connection from the RS-485 port.
2. Connect a serial cable between the controller and the computer on which HCM will run. See *Connecting to a computer through the serial port* on page 21.
3. Start HCM and establish communications with the controller.
4. Make the entries as described in the section *KMC digital network configuration* on page 28.
5. Set up the Ethernet routing table. See *Ethernet routing table* on page 29.
6. On applicable models, do the following:
   - Enter BACnet parameters. See *Setting up for BACnet networks* on page 30.
   - Set up the Modus communications. See *Setting up for Modbus networks* on page 32.
7. Return the network connection to the RS-232 port.

8. Cycle the power to the controller. The controller can now be connected to a network and additional programming can be performed with WinControl XL Plus or TotalControl.

## KMC digital network configuration

The entries in the table *HCM Configuration Screen setup fields* on page 28 are required for controller-to-controller communications on a either KMD Tier 1 or KMD Tier 2 networks.

***Table 4-1 HCM Configuration Screen setup fields***

| Setting | Description |
|---|---|
| Address | Enter the address that is assigned to the controller on the KMD Tier 1 network. Valid entries are 1–31. |
| Last Panel | Not applicable on any KMD-5205 or KMD-5270 models. |
| SubLAN A | Sets the connection speed of the Tier 2 port to which the controller is connected. Set the baud to match the baud of the other controllers on the Tier 2 network. |
| Modem | Select to indicate a modem is connect to the nine-pin serial connector. If Modem is selected, a computer cannot be directly connected to the nine-pin connector. |
| Modem String | The controller automatically transmits initialization strings for U.S. Robotics modems. If you are using a different modem, enter the initialization string here. This can normally be found in the modem manual.<br><br>The default initialization string is *AT&A &B1 &C1 &D2 &H1 &K0 &R*. |
| Computer Port | Enter the communication speed for a PC is directly connected to this port or the modem-to-computer baud if a modem is connected to the controller. |
| SMPT IP Address | Enter the IP address of the e-mail SMTP server. This address is required to send e-mail with KMD-5270 models. The address is supplied by the network system administrator. |

## Ethernet routing table

The Ethernet routing table is a list that associates the KMC network addresses assigned to Tier 1 controllers with the IP addresses required by the LAN protocol. If the controller is not configured correctly, it will not communicate with other controllers and may cause problems with the rest of the network. Before starting the HCM initializing process you will need information about the controller and the LAN which is listed in Table 4-2.

***Table 4-2 Tier 1 controller Ethernet settings in HCM***

| Setting | Description |
|---|---|
| IP address | Supplied by network administrator. Enter the address next to the panel address of the LAN Controller. |
| MTU | 1400 or as supplied by system administrator |
| Gateway | Use default (255.255.255.255) unless a router (gateway) is located between two Tier 1 controllers. The router IP address is supplied by the network system administrator. |
| MAC address | The MAC address is located on the white label on the front of the controller. MAC addresses for KMC Controls products begin with 00-D0-6F. |
| Broadcast sever | Check if this controller is a broadcast server. |
| Interval | Set the interval for the broadcast message. The broadcast message is for KMD controllers and not a LAN broadcast message. |
| Subnet mask | Set the Subnet Mask address to 255.255.255.0. or as supplied by network system administrator. |

**Note**

Ethernet settings do not take effect in a controller until the power is cycled.

## Ethernet troubleshooting

If the controller does not appear Network Status in the WinControl program, try the following.

1. Obtain a crossover cable (available in most stores that carry network products).
2. Connect the crossover cable between the Ethernet connection on your computer and the Ethernet connector on the LAN Controller.
3. Open an MS-DOS window on your computer and Ping the controller's IP address. If the controller is operating correctly, you should receive a response to the ping command.

If you are unfamiliar with the above steps, contact KMC Controls for assistance

## Setting up for BACnet networks

These topics apply only to the following models:

- KMD-5205-006
- KMD-5270-001
- KMD-5270-006

If the controller is licensed for BACnet and connected to a BACnet network, the controller must be configured to communicate with the network.

***Table 4-3 BACnet settings in HCM***

| Setting | Description |
|---|---|
| Instance | The device instance number as assigned by the BACnet system designer. Instance numbers are required, must be unique among all devices on the internetwork and range from 0 to 4,194,303. |
| Name | A required 16-character label of the device. *Name* must be unique among all devices on the internetwork. The set of characters used in *Name* is restricted to printable characters. |
| Location | Optional information used to further identify a piece of equipment. |
| Description | Optional information used to further identify a piece of equipment. |
| APDU Timeout | Indicates the period—in milliseconds— between retransmissions of an APDU requiring an acknowledgement for which no acknowledgment has been received. The default value is 3000 milliseconds. |
| Max Master | Not applicable to KMD-5205 or KMD–5270 models. |
| Token Timeout | Not applicable to KMD-5205 or KMD–5270 models. |

**Detail**

BACnet device settings are covered in more detail in BACstage or TotalControl help. The BACstage and TotalControl reference guides are available also in Adobe Acrobat format on the KMC Controls web site.

## Control Basic programming for BACnet

These topics apply only to the following models:

- KMD-5205-001
- KMD-5205-006
- KMD-5270-001
- KMD-5270-006

### Control Basic programming for BACnet

For Control Basic programming, the KMD–5270 models support the BACnet object types that are listed in Table 4-4.

***Table 4-4 Supported BACnet object types***

| Mnemonic | Object type |
|---|---|
| AI | Analog Input |
| AO | Analog Output |
| BI | Binary Input |
| BO | Binary Output |
| AV | Analog Value |
| BV | Binary Value |

Program the controllers as you would other KMD series controllers. Observe the following details when programing an interface to a BACnet internetwork:

- Only input, output and variable points within a BACnet licensed controller appear as objects in a device on the BACnet internetwork.
- A point configured as a KMD digital point will appear as a BACnet binary object. Analog points appear as analog objects.
- To be visible as an object to BACnet devices, configure the KMD point with both a description and a label.
- Use BAC-SET, BAC-GET and BAC-RLQ in Control Basic to read and write other objects on other BACnet devices.

KMC Controls recommends that all BACnet services have adequate error handling protocols within your control program. The following Control Basic code segment demonstrates reading the state of binary input BI8 in a BACnet device with instance number 1.

**! Caution**

The WAIT statement in the following example is required. Do not delete it or the program will not run correctly.

*Example:*

```
250 G = BAC-GET( 1 , BI8 ) : REM BACnet read
260 ON-ERROR 280 : REM If error, bad read, don't use it
270 1-VAR16 = G : REM Read was good, use the value.
280 WAIT 0:00:15 : REM Release so other CB programs can run
290 END
```

### Access to the controllers from BACnet

To access the BACnet licensed controller, use a BACnet operator workstation such as BACstage.

- The WebLite will appear in the BACstage device list but cannot be selected. Its objects are not accessible for configuration from the BACstage *Object* menu.
- The configured points within the WebLite are the only points visible in BACnet.
- In BACstage, use *BACnet Read/Write Property* under the *System* menu in BACstage to manually view or change properties.
- In TotalControl the BACnet licensed controllers are added to the Network Manager list.
- KMC BACnet controllers and third-party devices may read and write to the objects in the WebLite with off-panel reads and writes.

## Setting up for Modbus networks

These topics apply only to the following models:

- KMD-5205-005
- KMD-5205-006
- KMD-5270-005
- KMD-5270-006

Set the following Modbus communication parameters with HCM. All Modbus devices connected to the same network—including the KMD-5205 and KMD 5270 models—must be set to the same mode, baud and parity.

***Table 4-5 Modbus settings in HCM***

| Setting | Description |
|---|---|
| Mode | Select only RTU. |
| Baud | Set to 9600, 19,200 and 38,00 baud. |
| Data | Set to even, odd or no parity bits |

## Programming for Modbus in WinControl XL Plus

Use WinControl XL Plus to map Modbus registers to variables in the KMD-5205 and KMD-5270 Modbus licensed controllers. Once the registers are mapped to variables, the variables are handled with Control Basic to read from and write to the registers. The procedures for mapping the registers to variables are covered in WinControl XL Plus help and the WinControl XL Plus Reference manual.

**Note**

WinControl XL Plus 2.1 or later is required to map Modbus registers to variables in the KMD-5205-005 and KMD-5270-005 controller.

## Firewalls and network communications

Firewalls are commonly installed on networks to prevent unauthorized traffic or electronic probes from entering the network. If the controller must communicate with a network where a firewall is in place, the following actions must be taken. Tier 1 controllers communicate through one of three Ethernet Ports:

***Tabel 4-6 Firewall ports***

| Connection | UDP Port |
|---|---|
| WinControl to Tier 1 controller | 21068 |
| Tier 1 controller to Tier 1 controller | 21069 |
| Tier 1 controller to Tier 1 controller | 21070 |

These ports must be open for communications to pass through a firewall.

If the controller resides behind a Network Address Translation (NAT) router, the IP address for the controller must be preceded by the lowercase letter 'r' in the WinControl system menu. (For example, r128.1.1.5.)

Adding this prefix letter will cause WinControl to disregard the IP table and download from the panel itself.

**Note**

If you use this method you will only be able to connect *one* Tier 1 controller through the router.

## System time keeping

The controllers feature real-time clocks. Once the clock is set with WinControl XL, the controller maintains accurate time even during power loss. A KMC digital network uses the lowest addressed Tier 1 controller with a real-time clock as the system time keeper.

## System graphics

These topics apply only to the following models:

- KMD-5270
- KMD-5270-005
- KMD-5270-001
- KMD-5270-006

The KMD-5270 WebLite models can store up to eight system group background graphics which can then be served to a standard web browser. Use the following procedure in WinControl XL Plus to make a graphic available for browser access.

**Detail**

WinControl XL Plus 2.1 or later is required to load browser graphics into a KMD–5270 WebLite.

1. Connect to the controller with WinControl XL Plus over Ethernet.
2. Choose *Control* menu, *System Groups.* and then *Graphics.*
3. Enter the file name of the background graphic to be stored in the KMD-5270 for viewing with a web browser.
4. Enter the same name in the *Bitmap/JPEG* column in the System Groups list window.

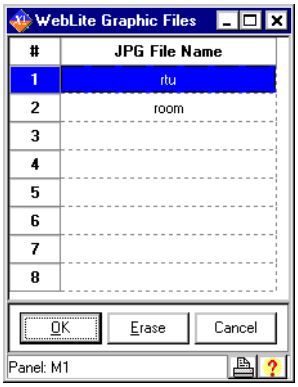


***Illustration 4-1 Web graphics file list***

**Caution**

A background graphics file name may be compatible with WinControl XL Plus but not with the browser. WinControl XL Plus will send a background graphic with an incompatible file name to the controller but the browser may not display it. Use the following guidelines for best results.

- Use the file name without the extension.
- The file type must be JPG format and cannot be larger than 50kB.
- Place the file in the *Pictures* directory in the job folder. This is the same location for other system group graphics.
- Use only file names that are compatible with web browsers. If unsure about browser compatibility, use only letters and numbers.
- File names are limited to 10 characters by WinControlXL Plus.

# SECTION 5

## Using a web browser (KMD-5270 models only)

This section explains how to view and control a KMD-5270 with a web browser.

Through the embedded HTTP server in the KMD-5270, you can use a web browser to view and make changes to the following functions in the controller.

***Table 5-1 WebLite view and change functions***

| Function | Control |
|---|---|
| System Groups | Views text and background graphics. |
| Inputs | Change value and manual mode status |
| Outputs | Change value and manual mode status |
| Variables | Change value and manual mode status |
| PID Controllers | Change value and manual mode status |
| Weekly Schedules | Change times |
| Annual Schedules | Change dates |

These functions are fully described in the section *The Control Menu* of the *WinControl XL Plus User's Manual.*

### Applicable models

The topics in this section apply only to the following models:

- KMD-5270
- KMD-5270-001
- KMD-5270-005
- KMD-5270-006

## Browser requirements

Use only Microsoft Internet Explorer to view the web pages in a KMD-5270 controller. The browser requires the Java Virtual Machine, a product of Oracle, to view the trend graphs in the controller. Download the Java Virtual Machine at the following address.

www.oracle.com.

If you are using Internet Explorer version 10, which will only run on Windows 7 or Windows 8, you must enable the Compatibility View to get the WebLite web pages to work correctly. If you open the WebLite web page and the *Login* button is not present, change the compatibility mode by clicking the Compatibility icon in the address bar.

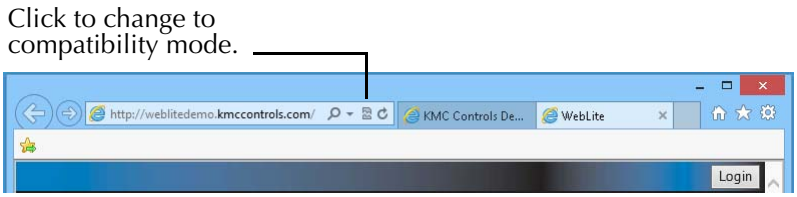


***Illustration 5-1 Changing to compatibility mode in IE 10.***

## Opening the WebLite home page

To access a WebLite with a web browser, open a browser window and then enter the IP address for the controller in the address bar. The WebLite home page opens.

**Note**

Two IP addresses may be assigned to a WebLite. The network system administrator will provide the address.

- Use the internal IP address if you are connected to the same network as the WebLite.
- Use the IP address assigned for viewing with a browser if you are connecting to the WebLite through an internet service or network firewall.

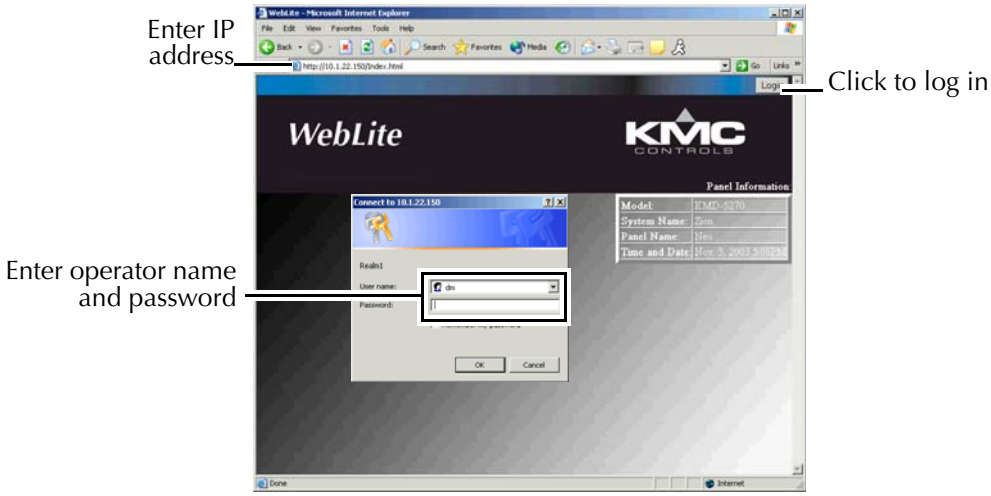


***Illustration 5-2 WebLite home page***

## Log in and security

When the home page is open, click *Login* and then enter your user name and password. Only assigned operators can view or make changes to a WebLite controller. Security levels are assigned with WinControl XL Plus and correspond to WebLite permissions as follows:

***Table 5-2 Password permissions***

| Operator level | Permission |
|---|---|
| 1 | View only |
| 3 | Changes permitted only to the initial system group that opens for the operator at sign-on. |
| 5 | View and make changes |

After a logging in, the home screen displays a list of available functions.

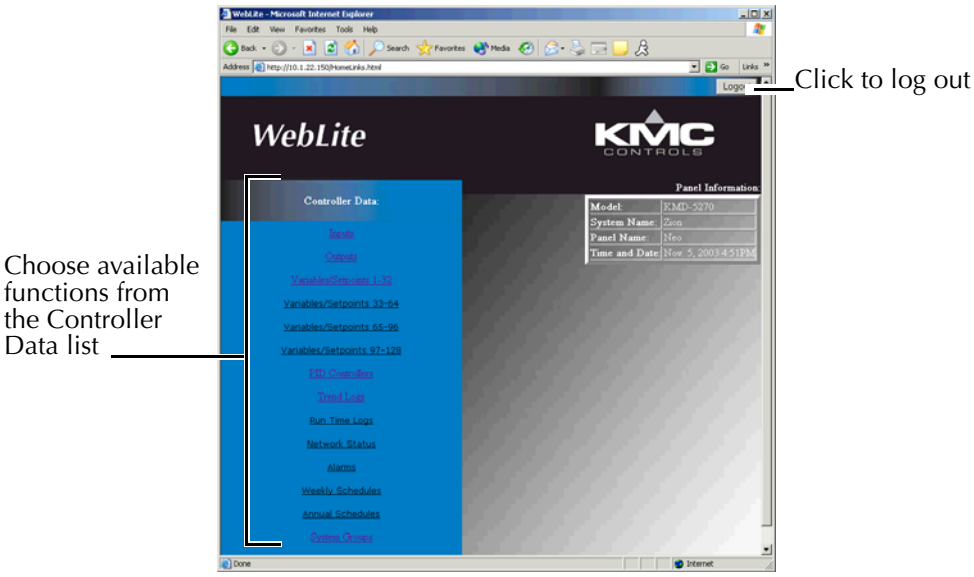


***Illustration 5-3 WebLite home page***

## Log out

Click the Logout button in the upper right corner of the home page to close the connection with the WebLite. Logging out maintains security and prevents unauthorized modifications to the system.

## Viewing and editing

Controlling a system through a WebLite is limited to making changes to values, setting the state of manual overrides and changing times and dates in schedules. When you choose a point such as Input, a monitor window opens. Below the data displayed in the window is an edit link which opens an additional window with the edit page.

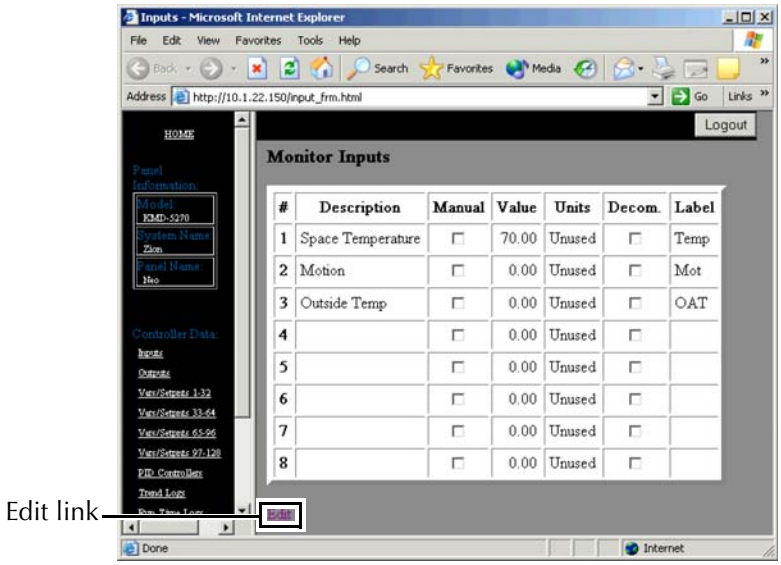


***Illustration 5-4 View only monitor window***

**Note**

Descriptions, labels and units can be changed only by using WinControl XL Plus.

To make changes to values:

1. Click *Edit*. The *Edit* window opens.
2. Enter a new value.
3. Click *Ok* and the change is sent to the controller.

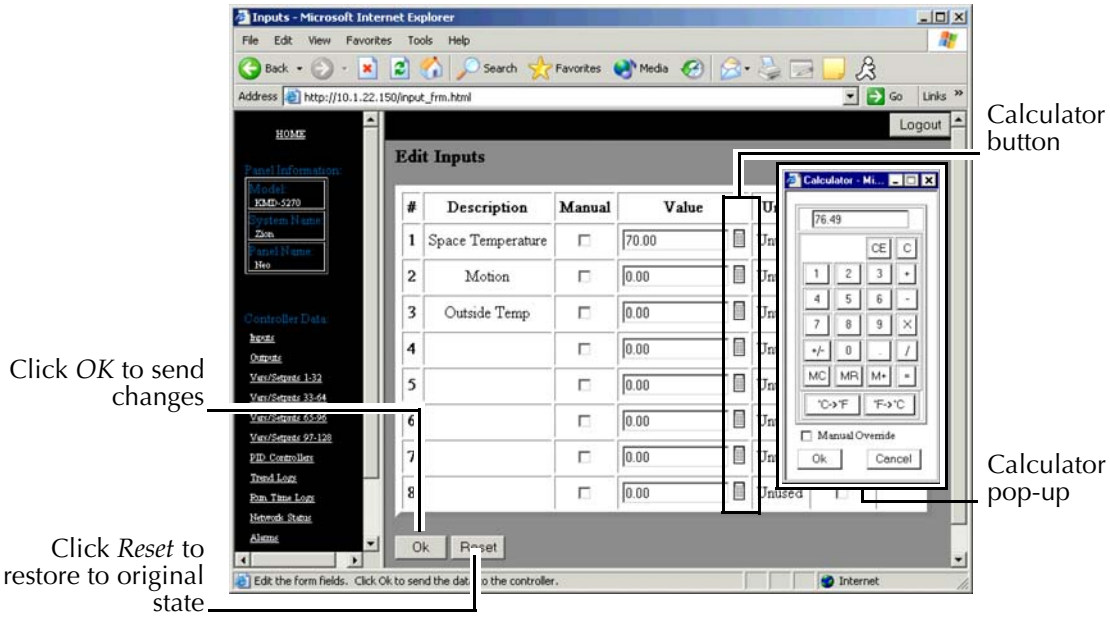


***Illustration 5-5 Input edit window***

Clicking the calculator button opens an additional window with calculator functions. The value in the calculator pop-up is sent to the edit page when you close the calculator pop-up or click *Ok*. The change is not sent to the controller until you click *OK* in the edit page.

## PID controllers

PID controllers are managed the same as the input function described in *Viewing and editing* on page 38.

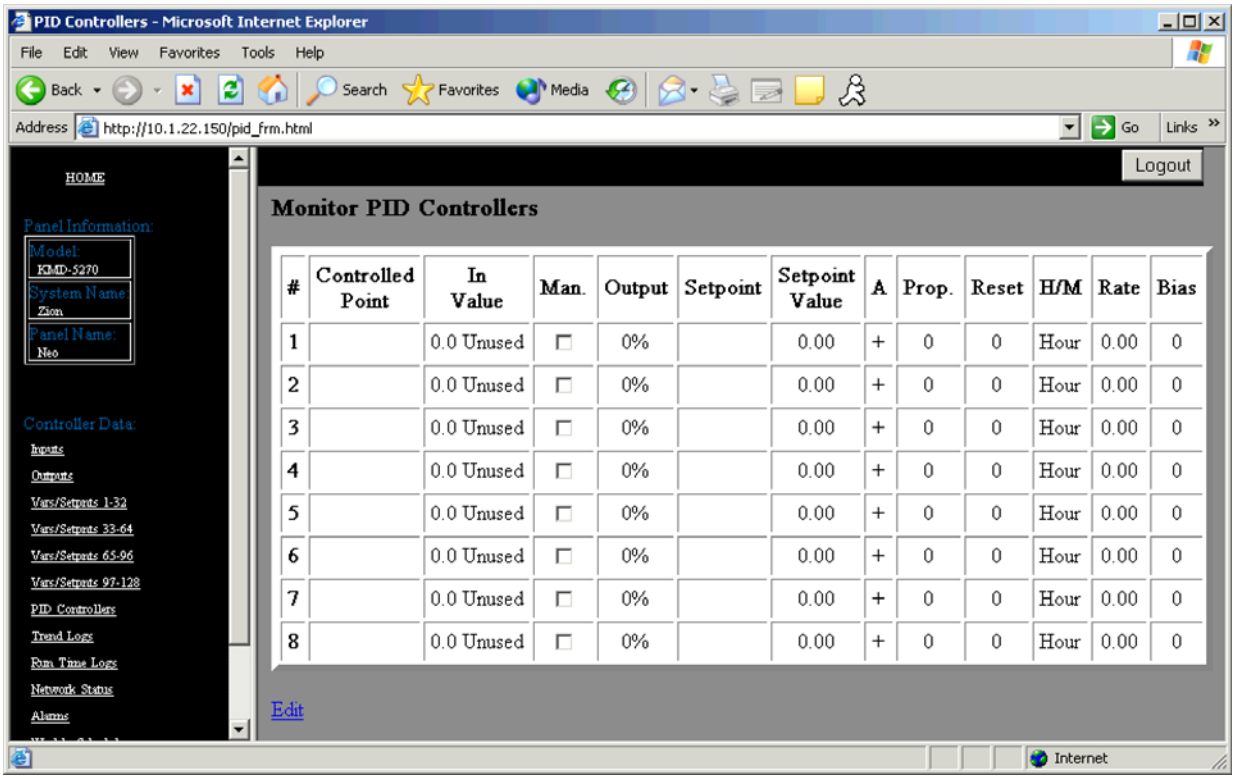


| # | Controlled Point | In Value | Man. | Output | Setpoint | Setpoint Value | A | Prop. | Reset | H/M | Rate | Bias |
|---|---|---|---|---|---|---|---|---|---|---|---|---|
| 1 | | 0.0 Unused | ☐ | 0% | | 0.00 | + | 0 | 0 | Hour | 0.00 | 0 |
| 2 | | 0.0 Unused | ☐ | 0% | | 0.00 | + | 0 | 0 | Hour | 0.00 | 0 |
| 3 | | 0.0 Unused | ☐ | 0% | | 0.00 | + | 0 | 0 | Hour | 0.00 | 0 |
| 4 | | 0.0 Unused | ☐ | 0% | | 0.00 | + | 0 | 0 | Hour | 0.00 | 0 |
| 5 | | 0.0 Unused | ☐ | 0% | | 0.00 | + | 0 | 0 | Hour | 0.00 | 0 |
| 6 | | 0.0 Unused | ☐ | 0% | | 0.00 | + | 0 | 0 | Hour | 0.00 | 0 |
| 7 | | 0.0 Unused | ☐ | 0% | | 0.00 | + | 0 | 0 | Hour | 0.00 | 0 |
| 8 | | 0.0 Unused | ☐ | 0% | | 0.00 | + | 0 | 0 | Hour | 0.00 | 0 |

***Illustration 5-6 PID control loop***

## Trend Logs

Trend logs may be viewed as either a table or graph.

**Note**

Viewing trend log graphs require the Sun Microsystems Java Virtual Machine to be installed on your computer. Download the Virtual Machine at http://java.sun.com/getjava/download.html

To view a trend log:

1. Choose *Trend Log* from the *Controller Data* list. A trend log list window opens.
2. Choose a trend log from the list. A window opens and displays the trend log in table format.
3. Click *Open Graph*. A new window opens in which the controller will graph the data.
4. Passing the cursor over a point on the graph displays the data value and the time it was collected in the *Pointer Coordinates* box.

To zoom in on a specific detail:

1. Left click and drag from left to right over the points you want to examine.

2. Click *No Zoom* to return to normal view.

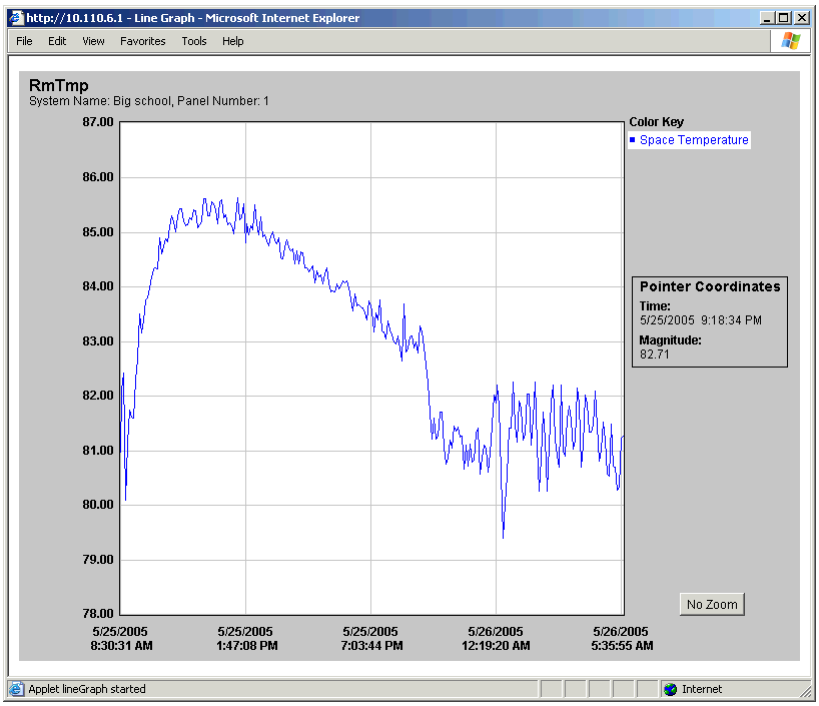


***Illustration 5-7 Trend log graph***

## Schedules

Weekly and annual schedules are managed much the same as with WinControl. The method for editing a weekly schedule is described in *Viewing and editing* on page 38.

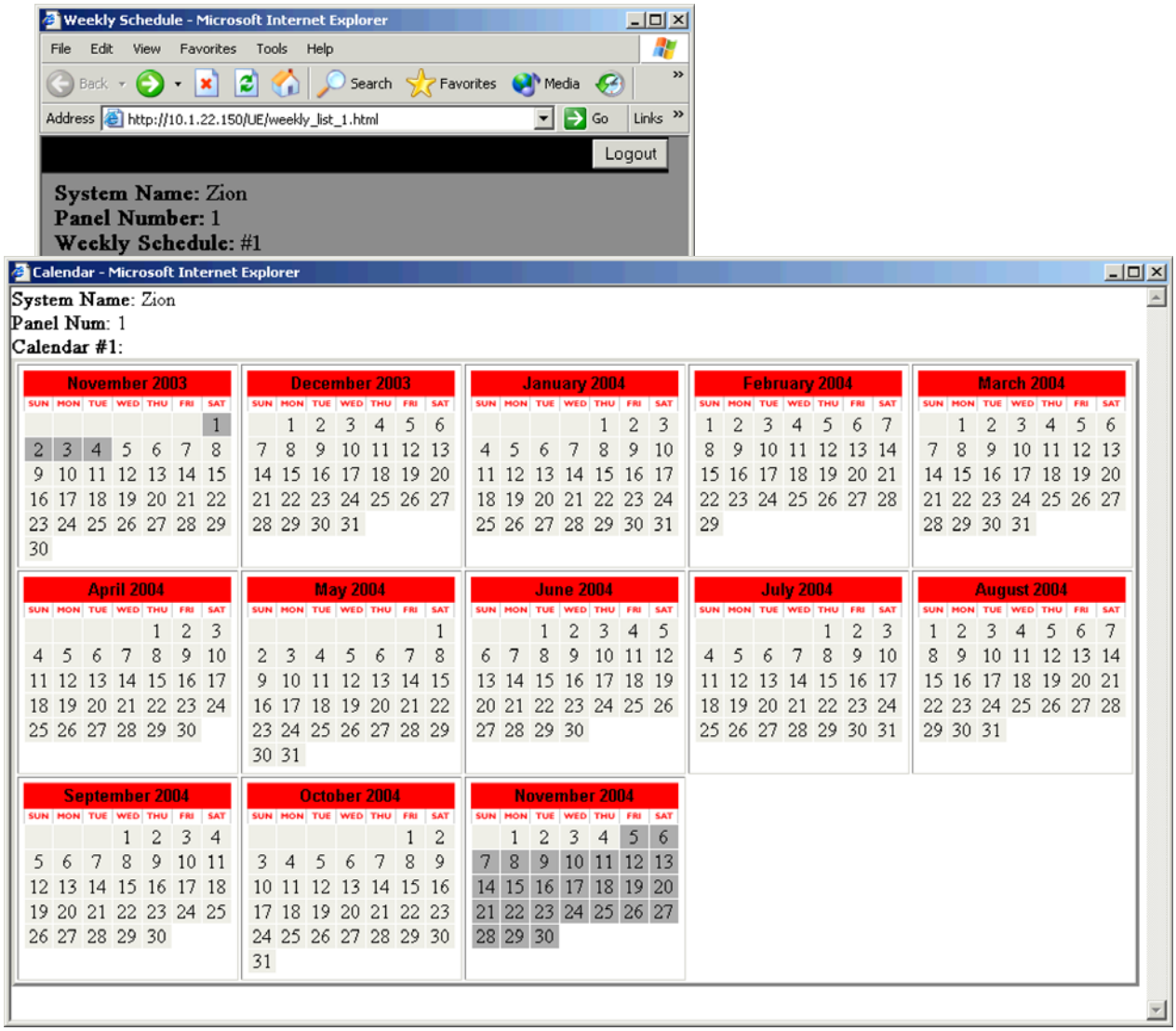


***Illustration 5-8 Weekly and annual schedules***