

Leica M-Series Stereo-microscopes

User Manual

Leica
MICROSYSTEMS

Contents

Page

Overview

Safety concept 4
Symbols 5
Controls and functions 6
Short instructions 8

Use

Ergonomics 9
Viewing height and interpupillary distance 9
Eyepoint, eye contact 9
Changing the magnification 10
Focusing 11
Stereoscopic and axial observation 12
Dioptric settings 12
Working with the stereomicroscope 14

Assembly

Basic outfit

Overview: Components 15
Spacer rings 16
Fitting the column to the incident- and transmitted-light bases 18
Microscope carrier 18
Binocular tubes, optics carrier, optical accessories 19
Graticules 20

Stands

Transmitted-light stand, bright field, 20W 20
Transmitted-light stands, bright and dark field 22
Swinging-arm stand ESD 22
Large swinging-arm and table-clamp stands 24

Illuminators

Transformers 26
Leica L2 cold-light source 27
Fibre-optic light guide 28
Cold-light source Leica CLS Series 28
Mains (line) lamp 25W 28
Incident lamp 6V/10W 28
Incident lamp 6V/20W 30
Coaxial illuminator 32
Near-vertical illuminator 32

Page

Accessories

Fitting accessory tubes 33
Double-iris diaphragm 33
Drawing tube 33
Video-phototubes: Photography, video, TV, filming, digital imaging 34
Attachment for vertical and oblique observation 37
Stages, polarization 37

Special notes

Tips and hints: What to do if 38
Care and maintenance of the stereomicroscope, maintenance 39
Calculating total magnification and field diameter 40
Optical data, MS5, MZ6 41
Optical data, MZ7$_5$, MZ9$_5$ 42
Optical data, MZ12$_5$, MZAPO 43
Dimensions 44

To you, the user

Thank you for your trust. We wish you success and satisfaction in your work with your new stereomicroscope from Leica.

The innovative technology of the new stereomicroscope line from Leica is expressed externally in the avant-garde form of the instrument. The rounded shapes, with their elliptical tendencies, demonstrate that beauty can be practical.

In developing this new stereomicroscope line we have placed great weight on simple, self-explanatory directions. We have however put a lot of effort into explaining all functions to you by means of pictures and text. You will only get the best out of your stereomicroscope if you take the trouble to study this user manual in detail.

If you still have a question sometime, just contact your local Leica agency or get in touch directly with Leica Microscopy Systems Ltd, Heerbrugg, Switzerland. We are gladly at your service. Customer service is a big thing with us. Not only before the sale, but afterwards as well.*

* The business units of Leica Microsystems hold the management system certificates for the international standards ISO 9001 and ISO 14001 relating to quality management, quality assurance and environmental management.

Safety concept

General directions

Before you try to use the instrument, please read the user manual and the safety notes.

Permitted uses

The Leica MS5, MZ6, MZ7$_5$, MZ9$_5$, MZ12$_5$ and MZAPO stereomicroscopes are optical instruments which use magnification to see the finer details of objects close to the eye.
The objects may be either natural, or created by human agency.
The basic outfit, which includes a stand and a light source, can be supplemented with various modules for photography, TV, dual station viewing and other applications.

Prohibited uses

- The use of the instrument in a different manner from that described in this user manual can lead to injury, malfunction and damage.
- Do not fit different plugs. Do not dismantle optical systems or mechanical parts unless instructions for doing so are given in the user manual.

Place of use

- The Leica MS5, MZ6, MZ7$_5$, MZ9$_5$, MZ12$_5$ and MZAPO stereomicroscopes are intended mainly for indoor use.
- If the stereomicroscope is used outdoors, protect it from dirt and damp. Lamps and electrically-operated stands from Leica may not be used outdoors.

Use in ESD protected rooms

The optics carrier MS5, MZ6, MZ7$_5$, MZ9$_5$, MZ12$_5$, the binocular tube, ErgoTubus™, ErgoKeil™ 5°–25°, the swinging-arm stand ESD and the cold light sources Leica L2 and CLS consist of ESD-discharging material (surface resistance (<10^{11} ohms/squared, discharge time <2 seconds, 1,000V to 100V).

- A connection socket for a 4mm dia. earthing cable is provided on the microscope carrier.
- There are two connection sockets for 4mm dia. earthing cables in the base of the swinging-arm stand.

Servicing

Repairs may only be carried out by Leica-trained service technicians. Only original Leica spare parts may be used.

Responsibilities of person in charge of instrument

- Ensure that personnel who use the instrument have read and understood this user manual and in particular the safety instructions.
- Ensure that the Leica MS5, MZ6, MZ7$_5$, MZ9$_5$, MZ12$_5$ and MZAPO stereomicroscopes are operated, maintained and repaired only by authorized and trained personnel.

Safety regulations

Electrically-operated items

The safety regulations listed below apply to the following items:

– Transmitted-light stand, bright field, 20W (page 20)
– Mains lamp 25W (page 28)
– Regulating transformer 0–7V/40W (page 26)
– Step transformer 4/5/6V (page 26)
– Motor focus (separate instructions)

Liquids

Be careful when handling liquids. If spilt on the equipment, they can:

– cause the stereomicroscopes and accessories to become electrically live, endangering personnel
– cause damage to the equipment.

Power cables

Inspect cables regularly for damage. Defective cables can:

– directly endanger personnel
– cause the stereomicroscopes and accessories to become electrically live, endangering personnel.

Positioning cables

Position cables with care. Make sure that personnel do not get entangled with them. The instrument could fall over, fall down, become damaged, damage other equipment, or cause personal injury.

Opening the instrument

Only authorized Leica personnel are permitted to repair electrical equipment.
Before opening up the equipment, pull out the power cable.
If you touch the live interior of the equipment, you may receive an electric shock.

Grid voltage

Ensure that the voltage setting on the equipment is correct.
A wrong setting can cause damage to the equipment.

Connections

When connecting power-consuming devices to the transformers, do not exceed the maximum permitted loading, as this can cause damage to the equipment.

Changing bulbs

- Before changing a bulb, disconnect the power cable.
- Never attempt to touch the inside of a lamp housing or transmitted-light stand while the instrument is connected to the power supply.
- Before changing a bulb, wait until it is cool, otherwise you may burn your fingers.

Legal requirements

Adhere to general and local regulations relating to accident prevention and environmental protection.

Conformity with European Community directive

The electrically-operated accessories for the Leica MS5, MZ6, MZ7$_5$, MZ9$_5$, MZ12$_5$ and MZAPO stereomicroscopes are constructed in accordance with the latest technologies and are provided with a statement of conformity with EC requirements.

You will find these symbols in the user manual:

Safety direction



This symbol denotes information which must be read and obeyed.
Failure to respect it can cause injury
Failure to respect it can cause malfunctioning, or damage to the equipment

Warning about accessible hot places, e.g. bulbs



Failure to respect it can cause burns

Important information



This symbol denotes additional information or explanations which promote understanding.

Action

▶ This symbol within the text indicates that certain operations must be carried out.

Explanatory notes

- This symbol within the text stands for additional information and explanations.

Overview

Standard outfit: Controls and functions

In this overview

we explain the controls and functions relating to the standard outfits.

Does your stereomicroscope look different from the one in the picture?

The modular design enables you to assemble an outfit matched to the application. Controls and functions which differ from those in the standard outfit are described in the appropriate section (see contents list on page 2).
Leica MZAPO see page 8.

Stereomicroscope

1 Magnification changer

Drive knobs with magnification scale.

MS5: 5 steps

MZ6: 6:1 zoom

MZ7$_5$: 7.9:1 zoom

MZ9$_5$: 9.5:1 zoom

MZ12$_5$: 12.5:1 zoom

MZAPO: 10:1 zoom.

2 Engaging ratchet positions

MZ6: Switch engages 7 magnification steps

MZ7$_5$: Milled ring engages 8 magnification steps

MZ9$_5$: Switch engages 9 magnification steps

MZ12$_5$: Switch engages 10 magnification steps

MZAPO: Switch engages 9 magnification steps.

3a Focusing drive

3b Coarse and fine focusing

Larger knob: Coarse focusing

Smaller knob: Fine focusing.

3c Adjustable ring

Changes the ease of movement of the coarse/fine drive.

4 Clamping screw

Holds the optics carrier in the microscope carrier.

5 Clamping screw

Holds the binocular tube (or accessory) to the optics carrier.

6 Interchangeable objective

Various objectives (achromatic, planachromatic, planapochromatic), depending on the outfit.

Binocular tube

7 Adjustable eyepiece tubes:

Interpupillary distance adjustable within the range 52mm – 76mm.

8 Wide-field eyepieces for spectacle wearers

Dioptric setting adjustable within the range from +5 to –5, and eyecups adjustable.

9 Clamping screws

These hold the eyepieces in the binocular tube.

10 ErgoTube™

The viewing angle is adjustable within the range 10° – 50°.

Leica Design
by Ernest Igl/Christophe Apothéloz

MS5

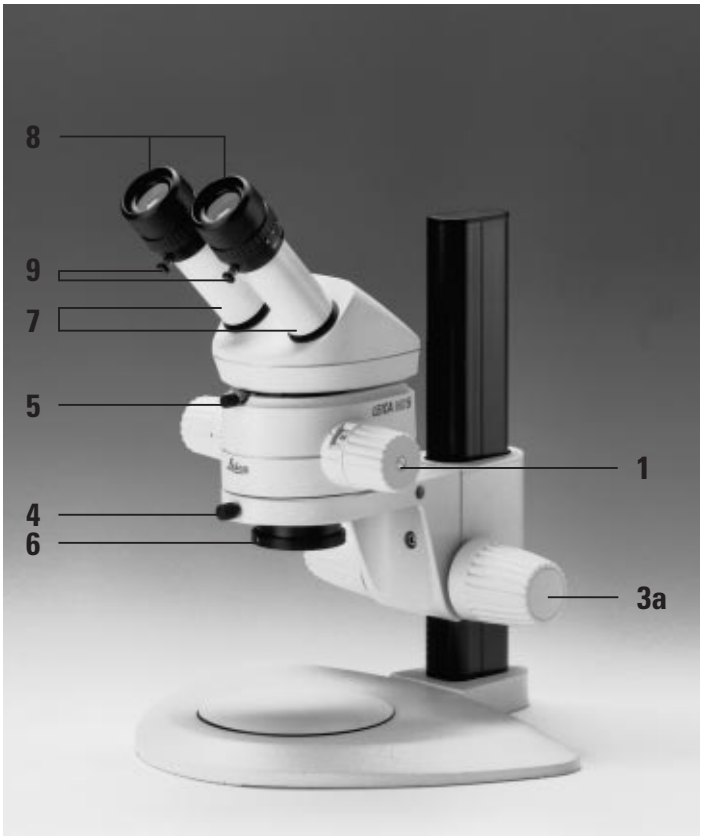

MZ6

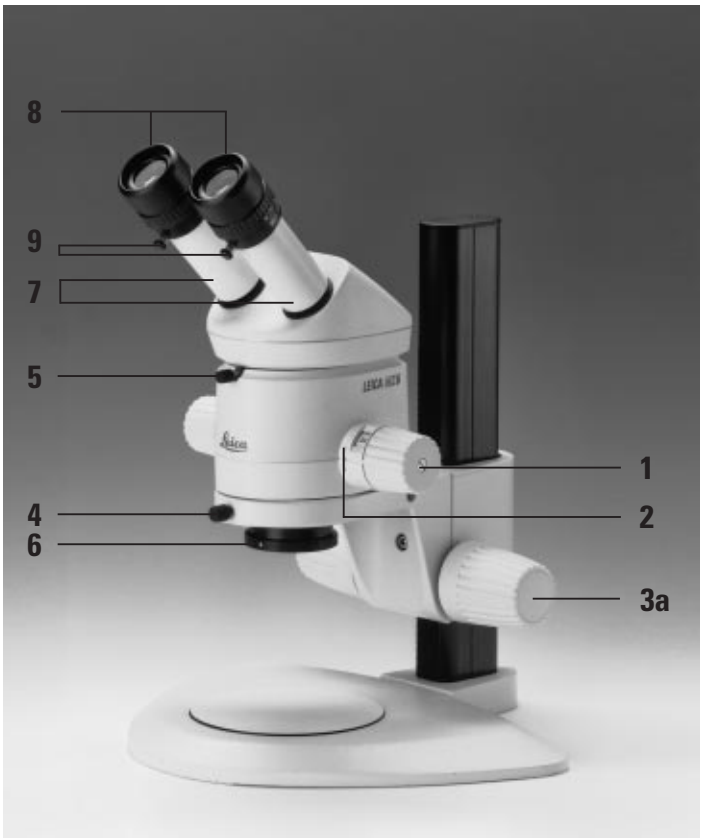

MZ7$_5$

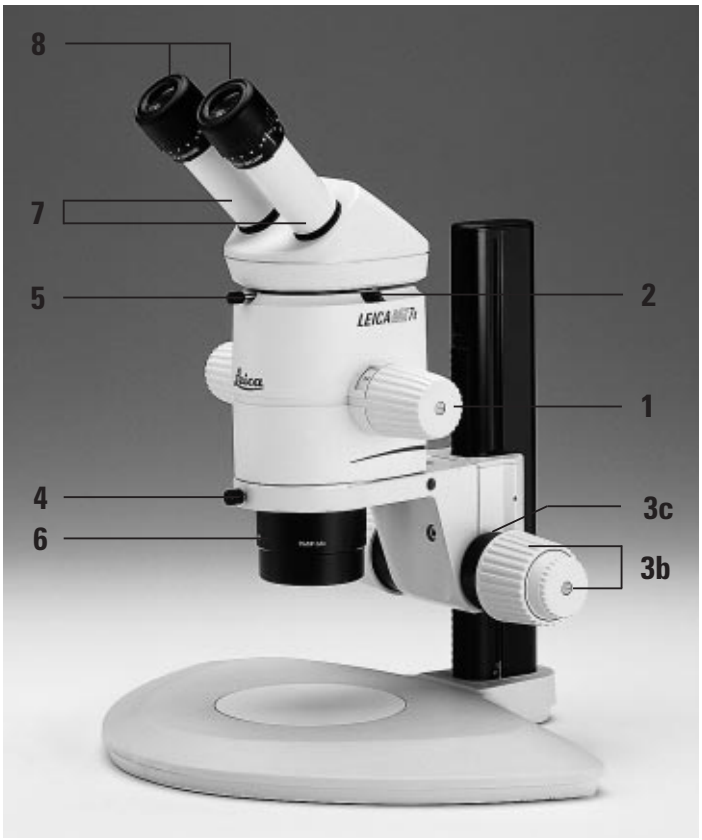

MZ9$_5$

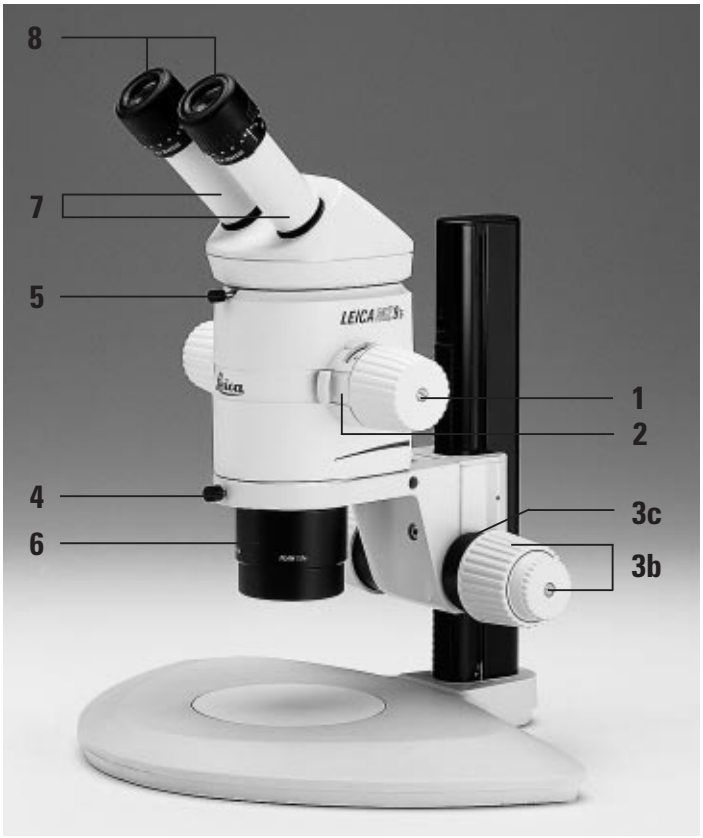

MZ12$_5$

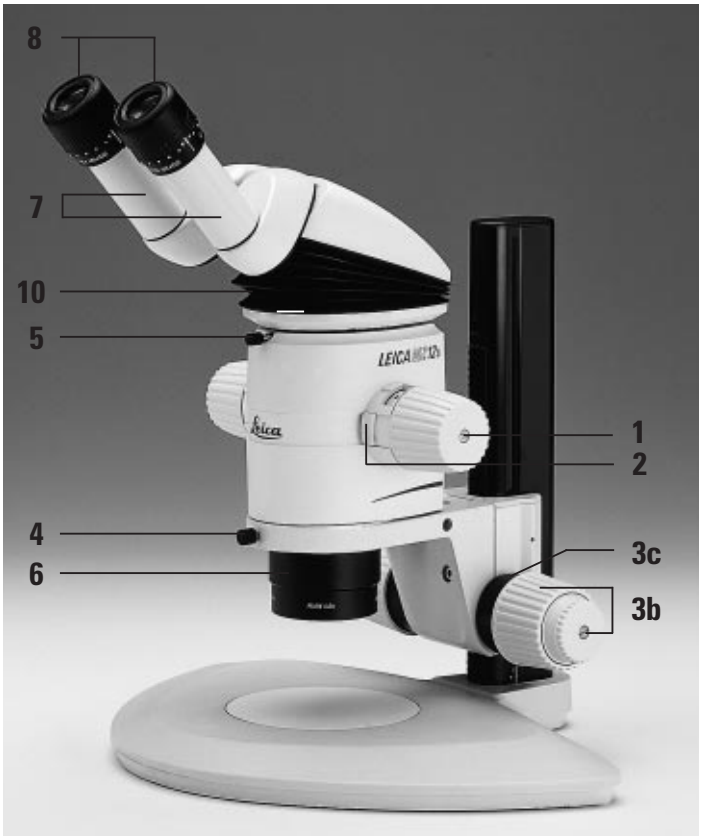

Short instructions

Checklist

In this overview

we have summarized the working sequence. You will find detailed user instructions on the pages indicated.

MZAPO

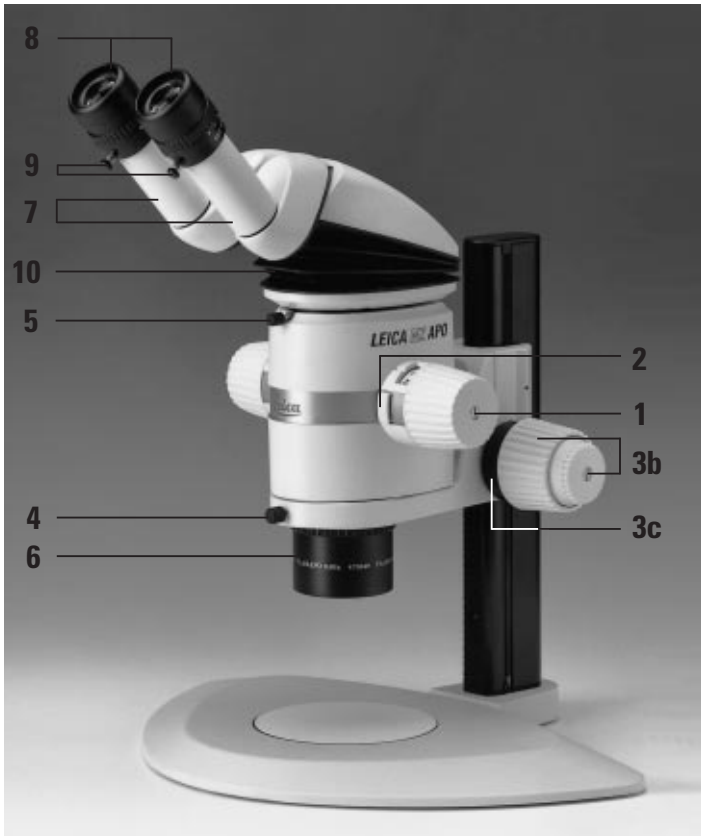

Inspect the cleanliness

- ▶ Remove dust and dirt from the instrument (page 39).
- ▶ Clean: Optical accessories, glass stage plates, and any graticules used (page 39).

Only for variable ErgoModules™

- ▶ Adjust viewing height (page 9)

Only for photomicrographic outfits

- ▶ Lever at position “VIS”.
- ▶ For trinocular tube: Push diaphragm lever to the right.
- ▶ Open double-iris diaphragm (position “OPEN”).

Adjust the interpupillary distance

- ▶ Using both hands, displace the eyepiece tubes (page 9).

Select the degree of eye contact

- ▶ Secure the eyecup in the position required (page 9).

Adjust the dioptric setting

- ▶ Adjust the dioptric setting precisely for each eyepiece (page 12).

Set the magnification required

- ▶ Turn the rotary knob to the desired magnification (page 10).

Focusing

- ▶ Look into the eyepieces and focus on the object (page 11).
- • Only for coarse/fine drive:

  Focus approximately with the large knob, and then accurately with the small knob.
- ▶ If the focusing movement is too loose or too tight, adjust the ease of movement (page 11).

Adjust the depth of field

- ▶ Adjust the depth of field with the double-iris diaphragm (page 33).

Microscope carrier AX

- ▶ For measuring, photography and polarization, engage the vertical beam path (page 12).

Ergonomics, viewing height, interpupillary distance, eye contact

Ergonomics

The reasons why users often cannot work comfortably with the 45° tube are the differing heights of the outfits, the various accessories and working distances, and the fact that the same instrument is often used by several people of differing builds. This problem can be effectively solved by using the Leica ErgoModules™.

If you have problems with the viewing configuration on your stereomicroscope, ask your Leica consultant for the most ergonomic Leica solutions.

Viewing height, viewing angle

- The viewing height is correct when your head and back are comfortably positioned.

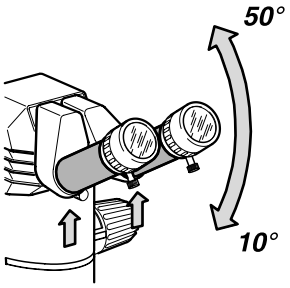

- On the ErgoTube™, the viewing angle is adjustable from 10° – 50°.

▶ Holding the eyepiece tubes at their bases, swing them up or down (see arrow).

ErgoModule™

- ErgoWedge™ 5° – 25°
- ErgoWedge™ ±15°
- ErgoModule™ 50mm
- The ErgoTube™ 45° has eyepiece tubes which are 65mm longer than the standard ones.
- ErgoModule™ 30mm – 120mm

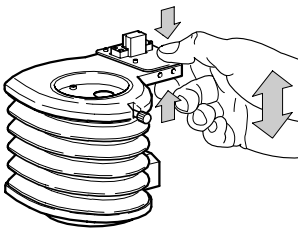

- After several years, regreasing may be necessary. Send the ErgoModule™ to the Leica service workshop.

Interpupillary distance

- The interpupillary distance is correct when you see a single circular field when viewing with both eyes.

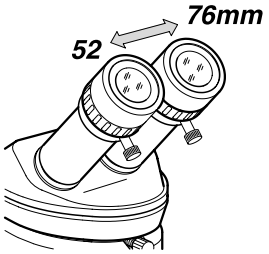

▶ Look into the eyepieces and use both hands to move the eyepiece tubes closer together or further apart.

Locating the eyepoint

- For 10×/21B wide-field eyepieces for spectacle wearers, the distance from eye to eyepiece is about 22mm.
- When you can see the entire field of view without restriction, you have found the correct position (eyepoint).

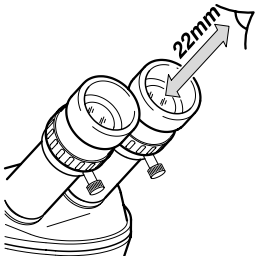

▶ To find the eyepoint, slowly bring your eyes closer towards the eyepieces.

Selecting the degree of eye contact

If you do not wear spectacles, and want closer contact to the eyepieces:

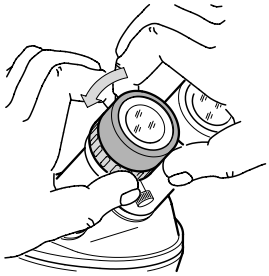

▶ Holding the diopter ring, turn the eyecup anticlockwise until it is released.

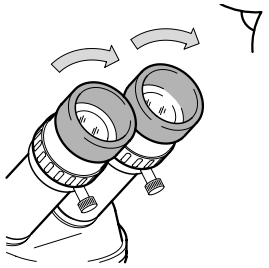

▶ Pull the eyecup upwards.

▶ Holding the diopter ring, turn the eyecup clockwise.

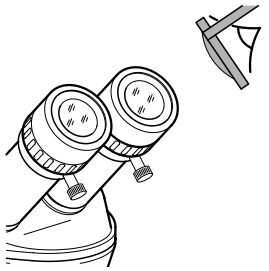

Spectacle wearers need the whole of the available distance. Move the eyecups to the lowest position.

Use

Magnification changer

MS5: 5 steps
MZ6: 6:1 zoom
MZ7$_5$: 7.9:1 zoom
MZ9$_5$: 9.5:1 zoom
MZ12$_5$: 12.5:1 zoom
MZAPO: 10:1 zoom

- **Zoom** means continuous change of magnification. Ratchets can be engaged for certain magnifications (see below).

Changing the magnification

- The magnification changer can be operated from either the right or the left.

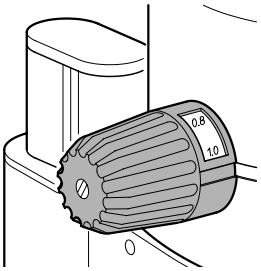

- ▶ Look into the eyepieces.
- ▶ Focus on the object (page 11).
- ▶ Turn the magnification changer to the position required.

Ratchet steps

MZ6: 0.8, 1.0, 1.25, 1.6, 2, 2.5, 3.2
MZ7$_5$: 0.8, 1, 1.25, 1.6, 2, 2.5, 3.2, 4
MZ9$_5$: 0.8, 1, 1.25, 1.6, 2, 2.5, 3.2, 4, 5
MZ12$_5$: 1, 1.25, 1.6, 2, 2.5, 3.2, 4, 5, 6.3, 8
MZAPO: 10, 12.5, 16, 20, 25, 32, 40, 50, 63

- Engage the ratchets whenever magnifications need to be exactly reproducible.

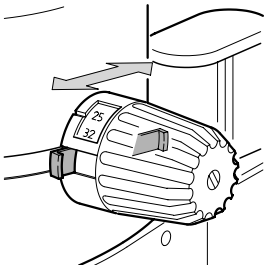

- ▶ For MZ6, MZ9$_5$, MZ12$_5$ and MZAPO: Press the switch.

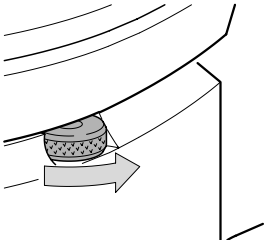

- ▶ For MZ7$_5$: Turn the knurled ring anticlockwise.

Scale of magnifications

MS5, MZ6

Display of magnification factors from 0.63 – 4.

MZ7$_5$

Display of magnification factors from 0.63 – 5. For other objective-eyepiece combinations, appropriate adhesive scales can be applied to the rotary knobs (page 19).

MZ9$_5$

Display of magnification factors from 0.63 – 6.

MZ12$_5$

Display of magnification factors from 0.8 – 10.

MZAPO

Display of magnifications with various optical combinations, e.g. with 1.0× objective and 10× eyepieces: 8× – 80×.

MZAPO: Setting the scale

The magnification scale can be set in accordance with the optical combination.

Example:

1.0× objective / 25× eyepiece

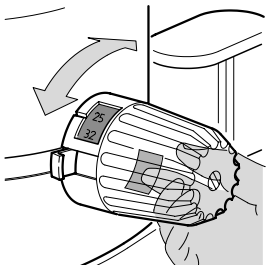

- ▶ Turn the magnification changer to the stop at its lowest magnification position.
- ▶ Read the magnification range from the table on page 43 (in the example given, 20× to 200×).
- ▶ Place a finger in the rear window of the magnification changer and displace the scale so that the position 20 is lined up with the index.

Magnifications and fields of view

The tables between page 41 and page 43 provide information about the magnifications and field diameters as a function of the magnification changer position of the eyepiece-objective combination used.

Magnification with MZ12$_5$/MZAPO Pan and Planapo objectives

When the MZ12$_5$/MZAPO planachromatic and planapochromatic objectives are used on the Leica MS5, MZ6, MZ7$_5$ and MZ9$_5$, the magnification is increased by the factor 1.25×. This factor is taken into account in the tables.

Magnification on MZ12$_5$/MZAPO	Magnification on MS5/MZ6/MZ7$_5$/MZ9$_5$
1.0× Plan/Planapo	1.25×
1.6× Planapo	2.0×
0.63× Planapo	0.8×
0.5× Plan	0.63
0.8× Plan	1.0×

Setting the working distance, focusing = obtaining a sharp picture

- To focus, use the focusing drive to raise or lower the stereomicroscope until the feature of interest is in focus. The working distances of the various objectives are listed in the tables on pages 41–43.
- The focusing drive can be operated from either the right or the left.

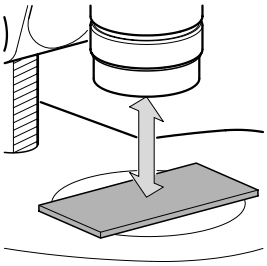

▶ Place the object beneath the objective.

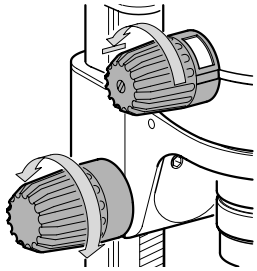

▶ Engage the lowest magnification (page 10).

▶ Look into the eyepieces.

▶ Using the rotary knob, bring the object into focus.

Only for coarse / fine drives

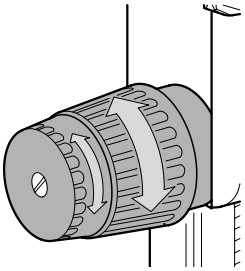

▶ Focus approximately with the larger knob.

▶ Focus accurately with the smaller knob.

Adjusting the free running of the focusing drive

Does the focusing drive run too loosely or too tightly, or does the equipment drift downwards?
You can match the ease of movement to the weight of the outfit and to your personal requirements.

Focusing drive

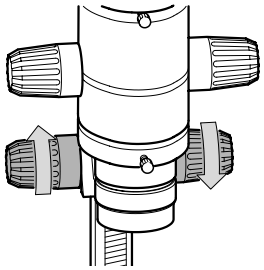

▶ Grip the drive knobs firmly with both hands and turn them in opposite directions until you obtain the required degree of resistance during focusing

Focusing drive, coarse / fine

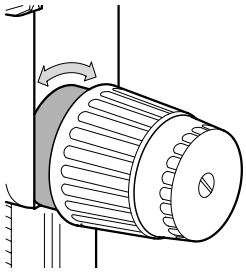

▶ Turn the black ring on the right-hand drive knob until you obtain the required degree of resistance during focusing.

Use

Microscope carrier: Turn optics carrier sideways, stereoscopic / axial observation

Microscope carrier for stereoscopic observation

This microscope carrier permits only stereoscopic observation, using both beam paths.

- The optics carrier can be turned sideways in the microscope carrier if the user needs to work from the side:

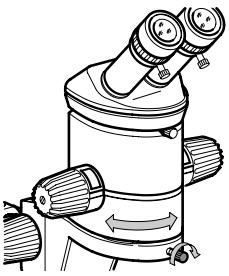

▶ Release the clamping screw.

▶ Turn the optics carrier sideways as required.

▶ Retighten the clamping screw.

The microscope carrier can be attached to the focusing drive in either of two positions:

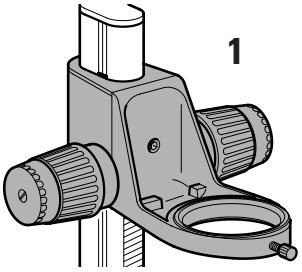

- For short working distances and for flat objects, use Position 1. Use this position also in conjunction with the attachment for vertical and oblique observation (see detailed instructions).

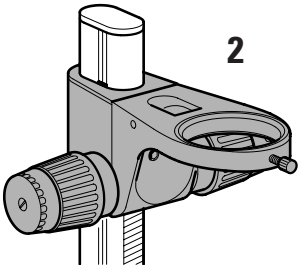

- Use Position 2 for long working distances and for bulky objects.

For assembly, refer to page 18.

Microscope carrier AX

The stereomicroscopes can be equipped with the microscope carrier AX for stereoscopic and axial observation instead of the standard microscope carrier.

- The microscope carrier **cannot** be turned sideways when in the microscope carrier AX (see page 24).
- The microscope carrier AX can only be fitted **in one position** to the focusing drive (see page 18).

For the Leica MZ12$_5$ and Leica MZAPO, use the spacer ring (page 16).

Stereoscopic observation

A three-dimensional image is essential for studying and working on spatial objects.

▶ Shift the stereomicroscope to the central position.

Axial observation

The parallax-free imaging produces more precise results in photography, measuring and polarization.

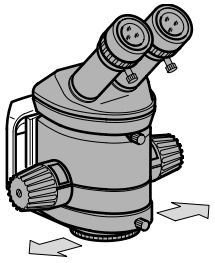

▶ Shift the stereomicroscope to the left or the right position. The object is now located directly beneath either the left or the right beam path.

- When photographing or measuring, select the beam path above which the phototube or measuring graticule is located.

Adjusting the dioptric settings and the parfocality

You must adjust the dioptric settings for both eyes exactly as described on page 13. Only then will the image be parfocal, i.e. it will remain sharp whenever the magnification is changed and there will be no need to refocus. Make the most of this opportunity, which is not offered by every stereomicroscope.

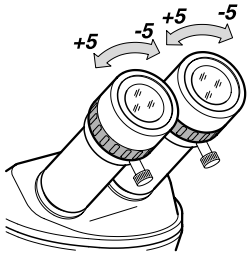

- The dioptric range is from +5 to –5.

The following adjustments must be carried out only once by each user.
The procedures for adjusting the dioptric setting and the parfocality are somewhat different if an eyepiece contains a graticule. Refer to the user manuals for the MPS modular photomicrographic systems or for measuring.

A Preparations

- ▶ Set up the illumination (pages 20–21, 26–32).
- ▶ Set the interpupillary distance and, if necessary, the viewing height (page 9).
- ▶ On the video-/phototube: Move the lever to position "VIS" and open the diaphragm.

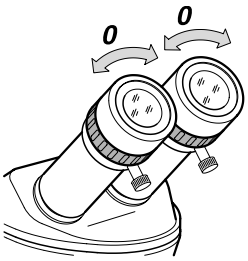

- ▶ Set the double-iris diaphragm to "OPEN" (page 33).
- ▶ Adjust the eyecups (page 9).
- ▶ Set both eyepieces to zero.
- ▶ Set the microscope carrier AX for stereoscopic observation.

B Focus on the test object

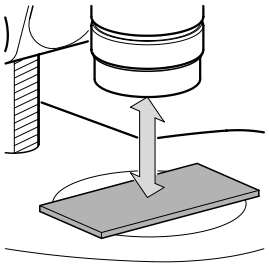

1. Flat test object

- ▶ Place such an object beneath the objective.

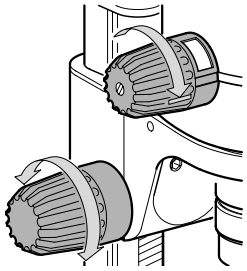

2. Lowest magnification

- ▶ Engage the lowest magnification position (page 10).
- ▶ Use the coarse focusing drive to set the working distance (page 11).

3. Look into the eyepieces

- ▶ Using the focusing drive, bring the test object into focus.

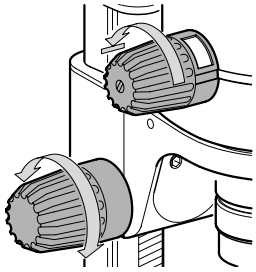

4. Highest magnification

- ▶ Engage the highest magnification position.

5. Image sharpness

- ▶ Optimize with focusing drive.

C Adjust the dioptric settings

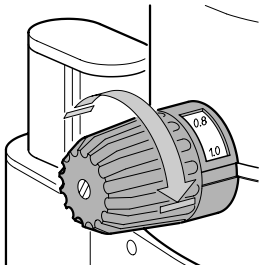

6. Lowest magnification

- ▶ Engage the lowest magnification position.

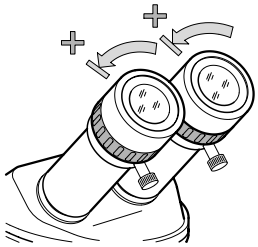

7. Do not look into the eyepieces

- ▶ Rotate the eyepieces anticlockwise in the "+" direction as far as the stop (+5 diopters).

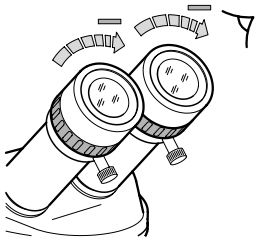

8. Look into the eyepieces

- ▶ Slowly rotate each eyepiece individually in the "–" direction until each eye sees the object sharply imaged.

D Inspect the parfocality

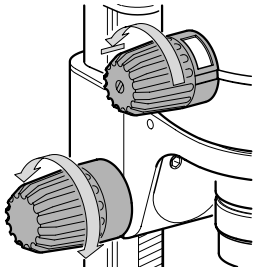

9. Highest magnification

- ▶ Engage the highest magnification position.

10. Refocus

- ▶ Refocus if necessary.

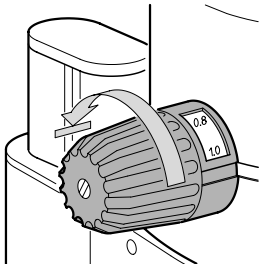

11. Magnification changer

- ▶ Slowly move the magnification changer from the lowest magnification to the highest.
- **The image sharpness must remain constant (parfocal). Otherwise, repeat the procedure.**

Use

Working with the stereomicroscope

In this section

we will show you how to work smoothly with your stereomicroscope and how to study objects routinely.

Preconditions for working comfortably

- Pay great attention when setting up your stereomicroscope. You will only benefit fully from the outstanding optical and ergonomic advantages of the instrument if you set it up precisely in accordance with the directions already given.
- For fatigue-free work, use the ErgoModules™ (page 9).
- Arrange your workplace as well as possible, and pay attention to the heights of chair and table.
- When sitting, use the entire seat area and also the back support of the chair.
- Support your forearms.
- During work breaks, stand up and move around for exercise.



Tips for your work

The stereomicroscopes are parfocally matched. This means that, once you have focused on a feature in the manner described, taking account of dioptric settings (page 12), you can zoom the magnification up and down without refocusing. You only need to refocus if you want to look at higher or lower planes in the object.

- When focusing on a fresh object, always start with the lowest magnification, because the larger field of view makes the object easier to find. Afterwards, select the magnification you want.

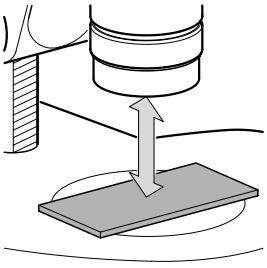

▶ Place the object beneath the objective.

▶ Illuminate the object.

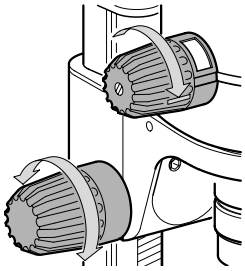

▶ Select the lowest magnification position.

▶ Using the focusing drive, set the working distance approximately (page 11).

▶ Look into the eyepieces and use the focusing drive to bring the object precisely into focus.

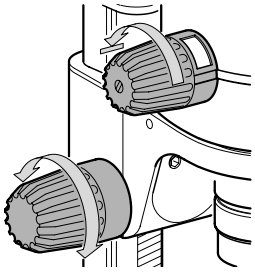

▶ Select the highest magnification position.

▶ Use the focusing drive to refocus.

Now the object should remain in focus at all zoom magnifications. Otherwise, check that your dioptric settings have been adjusted exactly as described on page 12.

Assembly

Basic outfit

The components

1a Incident-light base with stage plate
1b Transmitted-light base with glass stage plate
2a Side-faced column with drive housing, coarse/fine
2b Side-faced column with drive housing
3 Microscope carrier
4 Optics carrier
5 Interchangeable objective
6 Binocular tube
7 Wide-field eyepiece for spectacle wearers, with eyecups
8 Various ErgoModules™ or accessories for video, photography, drawing, fluorescence, coaxial incident light etc.

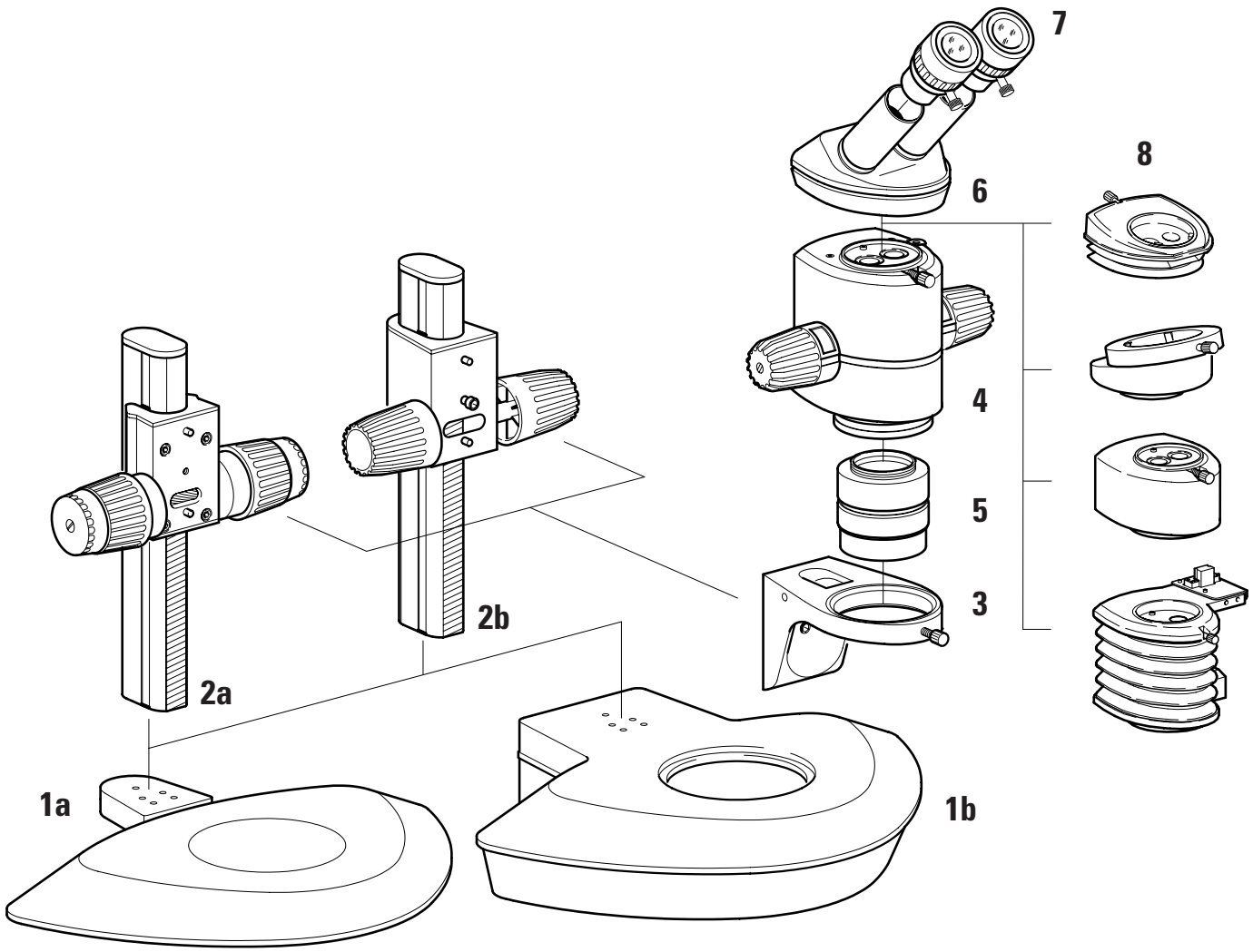

Spacer rings

Spacer rings are required in order to attach the objectives for certain instrument configurations.

- The Leica MZ9$_5$ is supplied with a spacer ring for the smaller-diameter achromatic objectives and 1.0× plan-achromatic objective. When the spacer ring has been removed by applying the tool provided, the larger-diameter planachromatic and planapochromatic objectives for the MZ12$_5$/MZAPO can be used.
- The Leica MS5, MZ6 and MZ7$_5$ can also be equipped with the larger-diameter planachromatic and planapochromatic objectives for the MZ12$_5$/MZAPO if a spacer ring is fitted.
- When the MZ12$_5$/MZAPO planachromatic and planapo-chromatic objectives are used on the Leica MS5, MZ6, MZ7$_5$ and MZ9$_5$ stereomicroscopes, the magnification is increased by a factor of 1.25×.

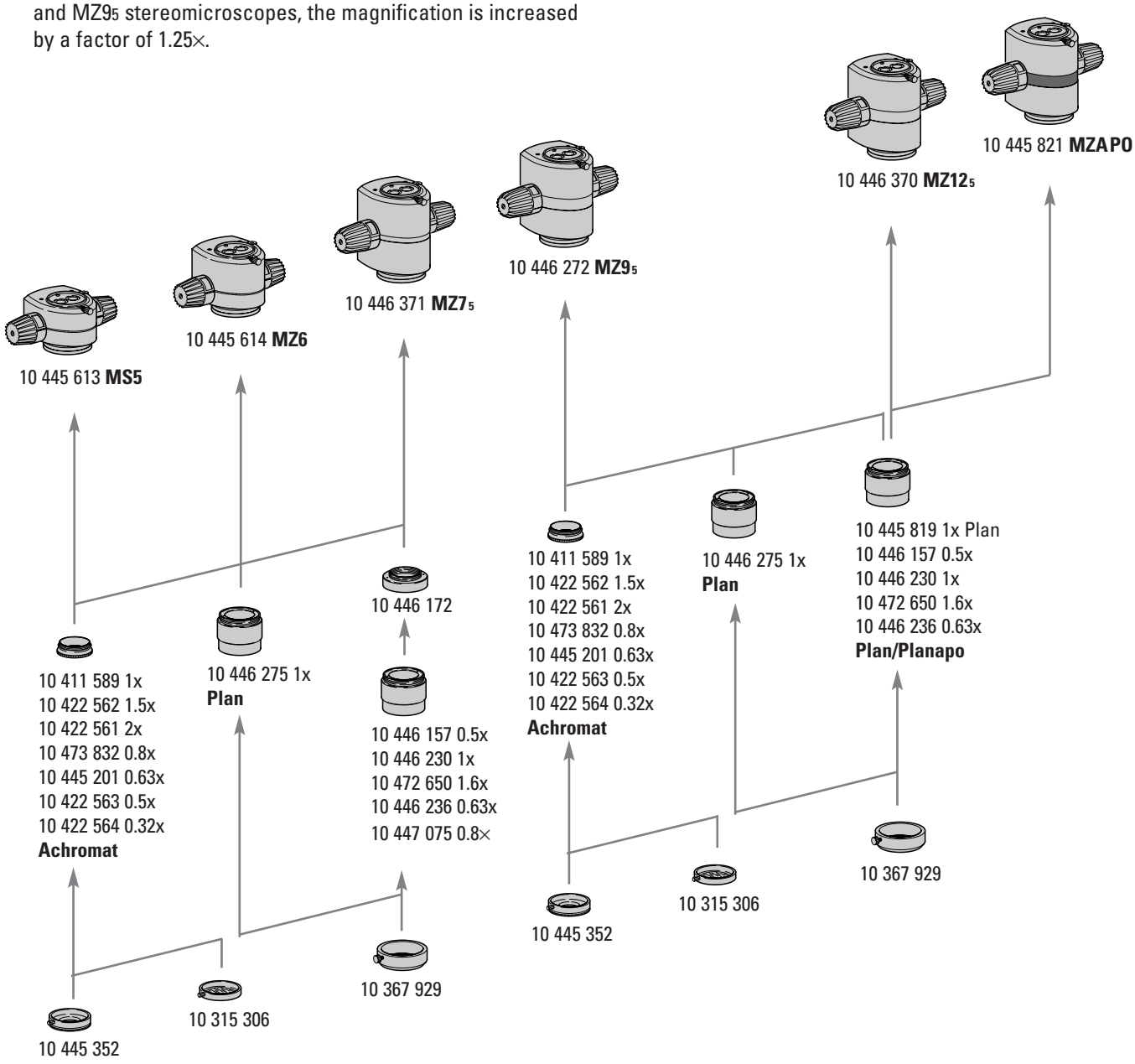

Objective combinations

	Article no.	MS5	MZ6	MZ7$_5$	MZ9$_5$	MZ12$_5$	MZAPO
Achromat							
Achromat 1×	10 411 589	C	C	C	C		
Achromat 1.5×	10 422 562	C	C	C	C		
Achromat 2×	10 422 561	C	C	C	C		
Achromat 0.8×	10 473 832	C	C	C	C		
Achromat 0.63×	10 445 201	C	C	C	C		
Achromat 0.5×	10 422 563	C	C	C	C		
Achromat 0.32×	10 422 564	C	C	C	C		
Plan							
Plan 1×	10 446 275	C	C	C	C		
Plan 1× MZ12$_5$/MZAPO	10 445 819	CA (10 446 172) M	CA (10 446 172) M	CA (10 446 172) M	C*M	C	C
Plan 0.5× MZ12$_5$/MZAPO	10 446 157	CA (10 446 172) M	CA (10 446 172) M	CA (10 446 172) M	C*M	C	C
Plan 0.8×	10 447 075	CA (10 446 172) M	CA (10 446 172) M	CA (10 446 172) M	C*M	C	C
Planapo							
Planapo 1× MZ12$_5$/MZAPO	10 446 230	CA (10 446 172) M	CA (10 446 172) M	CA (10 446 172) M	C*M	C	C
Planapo 1.6× MZ12$_5$/MZAPO	10 472 650	CA (10 446 172) M	CA (10 446 172) M	CA (10 446 172) M	C*M	C	C
Planapo 0.63× MZ12$_5$/MZAPO	10 446 236	CA (10 446 172) M	CA (10 446 172) M	CA (10 446 172) M	C*M	C	C
Accessories							
Coaxial incident light	10 446 180	C	C	O (10 446 300)	O (10 446 300)	C	C
Microscope carrier AX	10 445 618	C	C	C	C	CA (10 446 172)	CA (10 446 172)
Near-vertical illuminator	10 445 198	C	C	CA 2× (10 446 300)	CA (10 446 300)	CA (10 446 300) + (10 446 393)	CA (10 446 300) + (10 446 393)
Attachment for vertical and oblique observation	10 445 156	C	C	CA 2× (10 446 300)	CA (10 446 300)	CA (10 446 300) + (10 446 393)	CA (10 446 300) + (10 446 393)

C Compatible

CA Compatible if used with intermediate ring (order separately)

0 Intermediate ring recommended

M Magnification increased by factor 1.25×

* Remove intermediate ring (10 446 393); already included with MZ9$_5$.

Assembly

In the following sections

we will explain how to assemble a complete stereomicroscope outfit, including the incident- and transmitted-light stands. Detailed directions about the transmitted-light stands, the swinging-arm stand and the fitting of the remaining accessories are all described in the appropriate sections (see contents list on page 3).

Side-faced column ➜ incident-light base

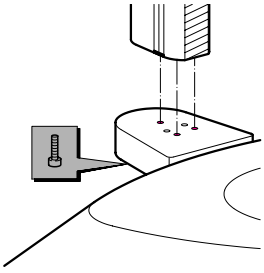

- ▶ Remove the stage plate.
- ▶ Introduce 3 Allen screws into the underside of the baseplate and secure them to the bottom end of the side-faced column.
- ▶ Insert the stage plate.

The side-faced column with focusing drive is available with column lengths 300mm and 500mm.

To fit the microscope carrier and the stereomicroscope, see the next column of text.

Side-faced column ➜ transmitted-light base

Transmitted-light stand, bright field, 20W: Pull the power cable out of the socket in the stand.

- **Transmitted-light stand for bright and dark field:** Pull the fibre-optic light guide out of the connector in the stand.

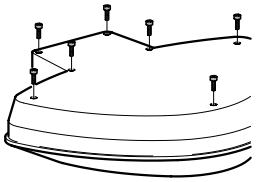

- ▶ Remove the glass stage plate.
- ▶ Carefully invert the transmitted-light base and remove 7 Allen screws from the base.
- ▶ Lift off the lower part of the base.
- ▶ Reverse the upper part of the base.

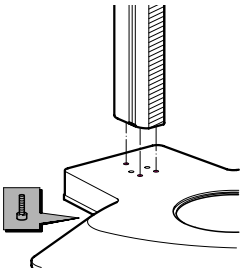

- ▶ Introduce 3 Allen screws into the cover plate from beneath and secure them to the bottom end of the side-faced column.
- ▶ Replace and secure the base.
- ▶ Insert the glass stage plate.
- ▶ Fit the microscope carrier and stereomicroscope as follows:

Microscope carrier, optics carrier, binocular tube, optical accessories

In this section

we will explain how to fit the microscope carrier and the optics carrier to the incident- and transmitted-light stands.
The combination of the optics carrier with the inclinable drive housing is described on page 22.

The Leica motor focus system is described in a separate user manual.

Side-faced column ➜ drive housing

The microscope carrier can be fitted in either of two positions to the drive housing (refer also to page 12):

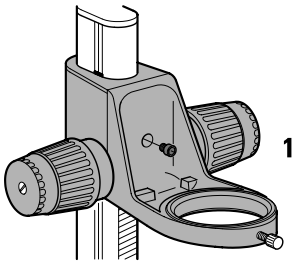

- ▶ Use an Allen screw to secure the microscope carrier in the position required.

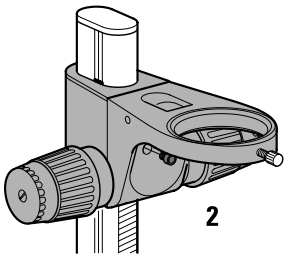

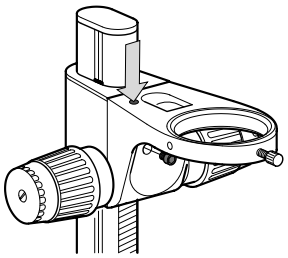

A connection socket for a 4mm dia. earthing cable is provided on the microscope carrier.

Microscope carrier AX

- The microscope carrier AX can be fitted to the drive housing only in position 1 (see above).
- The optics carrier cannot be turned sideways in the microscope carrier AX.
- The Leica MZ12$_5$ and Leica MZAPO require a spacer ring (page 16) in order to secure the planachromatic and planapochromatic objectives to the microscope carrier AX.

Optics carrier ➜ microscope carrier

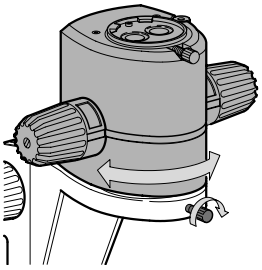

- ▶ **Gently** lower the optics carrier into the microscope carrier.
- ▶ Use the screw to secure the optics carrier in the position required.

Apply the adhesive scale of magnifications

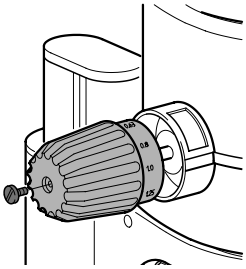

Only for MZ7$_5$:

- ▶ Remove the screws.
- ▶ Remove the rotary knobs.
- ▶ Apply the adhesive scales.
- ▶ Replace the rotary knobs.

Objective

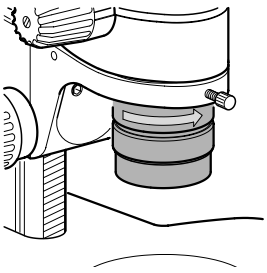

- ▶ Screw on the selected objective anticlockwise.

- Some instrument configurations require spacer rings in order to secure the objectives (page 16). These rings are fitted and removed using the tool provided.
- The Leica MZ9$_5$ is supplied with a spacer ring for the achromatic objectives and for the 1.0× planachromatic objective. When the ring has been removed by means of the tool provided, the larger-diameter planachromatic and planapochromatic objectives for the MZ12$_5$/MZAPO can be fitted.

Binocular tube

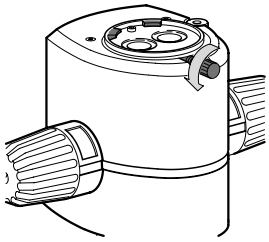

- ▶ Release the clamping screw.
- If you have an accessory such as an ErgoModule™ (page 9), a coaxial illuminator (page 32), a video-/phototube (page 35) or a filter-slide holder (page 35), fit it now to the optics carrier. Tighten the clamping screw.

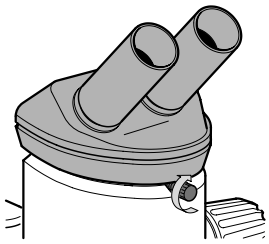

- ▶ Tilt the binocular tube and insert the edge of its dovetail ring beneath the two lugs on the optics carrier.
- ▶ Move the binocular tube from side to side until the locating screw on the optics carrier engages the guide.
- ▶ Tighten the clamping screw.

Eyepieces

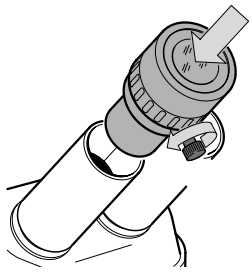

- ▶ Insert a graticule if appropriate (page 20).
- ▶ Release the clamping screws on the eyepieces.
- ▶ Insert the eyepieces **fully** into the eyepiece tubes. Check that they have seated correctly.

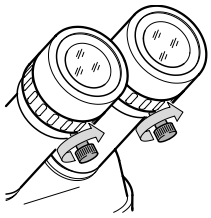

- ▶ Tighten the clamping screw.

- You can extend the overall magnification range by using 16×, 25× and 40× wide-eyepieces for spectacle wearers.

Graticules

- The graticules for measuring and counting are in mounts which can be fitted directly into the eyepieces.
- A highly-precise stage micrometer with a 50mm scale and 0.1mm and 0.01mm divisions enables the graticule to be calibrated in accordance with the magnification selected.
- It is best to measure with the microscope carrier AX in vertical position. The measurements are parallax-free and therefore more precise.
- Focusing and framing graticules indicate the format limits for all films.

Fitting the graticule

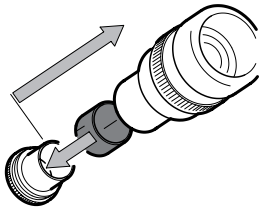

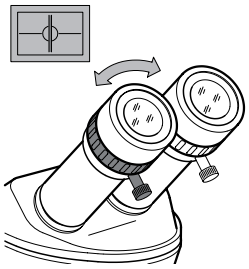

- ▶ Unscrew the sleeve from beneath the eyepiece.
- ▶ Push the graticule in mount over the sleeve, ensuring that it seats properly.
- ▶ Screw the sleeve into position again.
- ▶ Insert the eyepiece fully into the eyepiece tube.
- ▶ Looking into the eyepiece, turn the eyepiece in the eyepiece tube to align the graticule, and tighten the clamping screw.

The dioptric adjustment, and setting for parfocality when a graticule is in the eyepiece, are described in the user manuals for photomicrographic and measuring systems.

Stands

Transmitted-light stand, bright field, 20W

Follow the safety instructions given on page 4.

- ▶ Fit the side-faced column to the transmitted-light base as described on page 16.
- ▶ Fit the microscope carrier and the stereomicroscope as described on page 16.

Fitting the bulb

Never touch the bulb when it is hot. You may sustain burns.

- Do not touch the 6V/20W halogen bulb directly with your fingers, because fingermarks can cause it to crack when heated. Remove fingermarks immediately with a cloth dipped in pure alcohol.

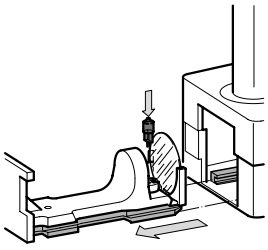

- ▶ Insert the slider together with the bulb socket.
- ▶ Hold the new bulb with a cloth and insert it fully into the mount.
- ▶ Push the slider carefully but completely back along the rail to the stop.

Filters

- The transmitted-light stand contains a KG1 filter.
- You can insert other 50mm diameter filters if you need them:

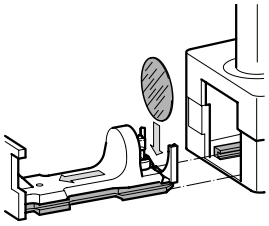

- ▶ Pull out the slider.
- ▶ Insert the 50mm diameter filter.
- ▶ Push the slider carefully but completely back along the rail to the stop.

Starting up

The ex-factory setting of the voltage selector is 230 (for voltages between 200–240V) and the fuse holder contains two 160mAT fuses.

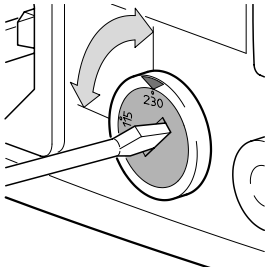

For 100–120V power supply:

- ▶ Set the voltage selector to 115.
- ▶ Fit the enclosed two 315mAT fuses in the fuse holder instead of the two 160mAT fuses (see section "Changing fuses", page 21).
- ▶ Connect the power cable to the socket of the base and to the power source.

Changing fuses

Use:

– Two 160mAT fuses for voltages between 200–240V.
– Two 315mAT fuses for voltages between 100–120V (see section “Starting up”, page 20).

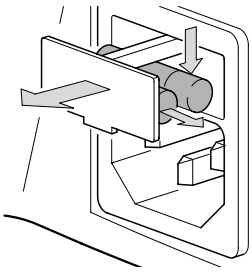

▶ Disconnect the power cable from the stand.
▶ Pull out the fuse holder.
▶ Fuse at rear: Press out downwards.
▶ Spare fuse at front: Pull out sideways and insert into holder at rear.
▶ Push the fuse holder back into position again.

Transmitted- or incident light

- Connect an incident lamp to the transmitted-light stand if required.
- Either transmitted light or incident light can be switched on

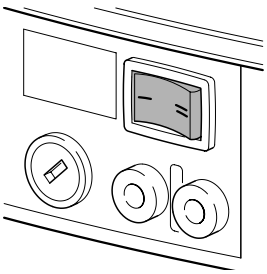

▶ For transmitted light: Switch in position I.
▶ For incident light: Switch in position II.
▶ Use thumb wheel to adjust brightness.

Switching on the transformer

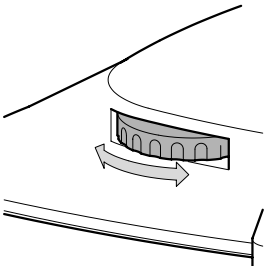

▶ On the rear of the stand: Use the thumb wheel to switch on the transformer and to adjust the brightness.

Operating the transmitted-light stand

Transmitted light (bright field), or inclined transmitted light

▶ Switch on transmitted light.

Transmitted light, bright field

- Bright field is suitable for examining translucent objects having contrasting structures. The object is directly illuminated from below and is seen in its natural colours against a bright background.

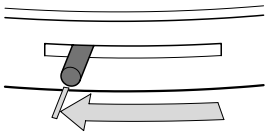

▶ For transmitted light, bright field: Pull lever forwards.

Inclined transmitted light

- Inclined transmitted light which traverses the object obliquely will produce effects advantageous for observing small translucent objects such as foraminifera and fish eggs.

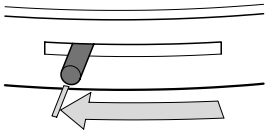

▶ Move the lever slowly towards the column of the stand until the desired effect is obtained.

Transmitted-light stand HL

Detailed information about the assembly and use of this stand is given in the separate user manual (M2-296-004) supplied with it.

Assembly

Transmitted-light stand for bright and dark field

The illuminator of the transmitted-light stand for bright and dark field consists of a fibre-optic light guide and a light source.

Read and respect the safety directions provided by the manufacturer of the light source

- ▶ Fit the side-faced column to the transmitted-light base as described on page 18.
- ▶ Fit the microscope carrier and the stereomicroscope as described on page 18.
- ▶ Connect the fibre-optic light guide to the stand and to the light source.

Starting up

Before using the light source, read the user manual for it.

Transmitted light, bright field

- Bright field is suitable for examining translucent objects having contrasting structures. The object is directly illuminated from below and is seen in its natural colours against a bright background.

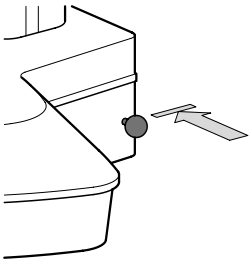

▶ To obtain bright-field illumination, push the knob fully in.

Transmitted light, dark field

- In the dark-field technique, the light from the source meets the object very obliquely from below. Only rays which are reflected or refracted at interfaces reach the objective, so edges and structural elements appear bright on a dark background, even if the contrast of the original object was extremely poor.

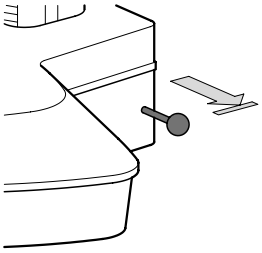

▶ To obtain dark-field illumination, pull the knob fully out.

Swinging-arm stand ESD

The swinging-arm stand ESD is of conducting material (surface resistance 10^{11} Ohm/square, discharge time <2 seconds from 1000V to 100V). Two sockets for connecting 4mm-diameter ground cables are provided on the base.

Assembly

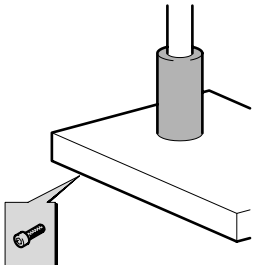

Swinging-arm stand with foot

▶ Introduce 4 Allen screws into the base from beneath and secure them to the end of the column.

Safety ring ➜ column

The safety ring secures the instrument and must always be fixed beneath the cross-member.

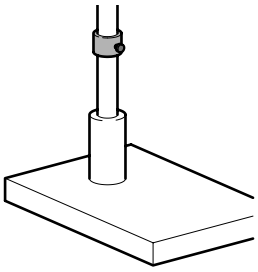

▶ Slide the safety ring down the column.

▶ Tighten its clamping screw.

Cross-member ➜ column

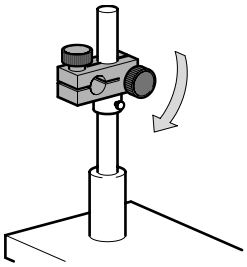

▶ Lower the cross-member on to the safety ring.

▶ Tighten the clamping screw.

Horizontal arm ➜ cross member

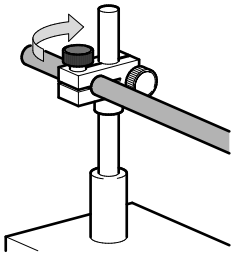

- ▶ Slide the horizontal arm into the cross-member with the connecting piece towards you.
- ▶ Tighten the clamping screw.

Drive housing ➜ horizontal arm

- The drive housing / microscope carrier can be fitted to the horizontal arm in either of two positions (see page 12).
- The circular port in the microscope carrier accepts an illuminator.

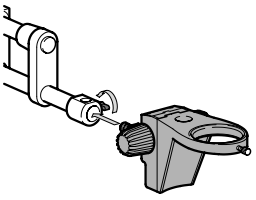

- ▶ Insert the peg of the inclinable focusing drive into the connecting piece.
- ▶ Tighten the clamping screw.

Optics carrier ➜ microscope carrier

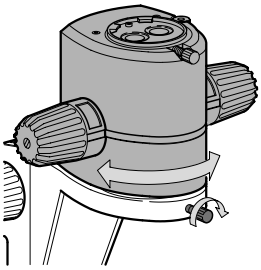

- ▶ Fit the optics carrier in the microscope carrier.
- ▶ Turn the optics carrier sideways in the microscope carrier as required.
- ▶ Tighten the clamping screw.

Focusing

The focusing knobs are located on the inclinable drive housing.

Is the focus movement too loose or too tight? Does the outfit tend to slide downwards? You can adjust the movement in accordance with the weight of the outfit and with your own personal requirements:

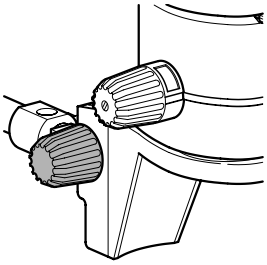

- ▶ Hold the drive knobs with both hands and turn them in opposite directions until the ease of movement is satisfactory.

Possibilities for adjustment

Tilting

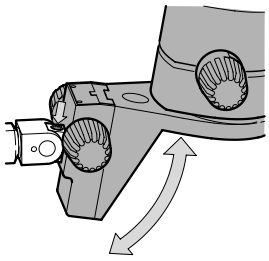

- ▶ Release the clamping screw.
- ▶ Tilt the instrument.
- ▶ Retighten the clamping screw.

Altering the working distance

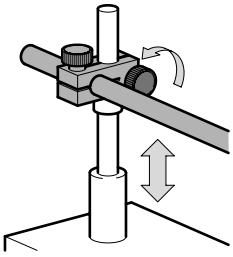

- ▶ Release the clamping screw.
- ▶ Raise or lower the cross-member as required together with the horizontal arm.
- ▶ Retighten the clamping screw.

Reposition the safety ring (see page 22).

Sideways movement

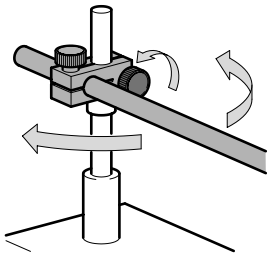

- ▶ Release the clamping screw.
- ▶ Move the instrument sideways on the cross-member.
- ▶ Retighten the clamping screw.

Altering the overhang

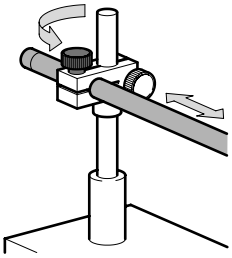

- ▶ Release the clamping screw.
- ▶ Displace the horizontal arm.
- ▶ Retighten the clamping screw.

Assembly

Large swinging-arm and table-clamp stands

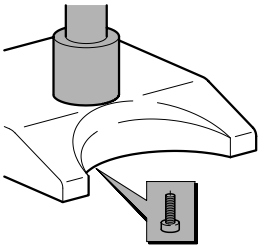

- **Table-clamp stand:** Use the clamp to secure the column to a table top 20mm – 50mm thick.
- **Swinging-arm stand:** Introduce 4 Allen screws into the base from beneath and secure them to the end of the column.

Safety ring ➜ column

The safety ring secures the instrument and must always be positioned beneath the horizontal arm.

- Position the safety ring with the screw head uppermost and towards you, and slide it down the column.
- Tighten the clamping screw.

Safety ring ➜ column

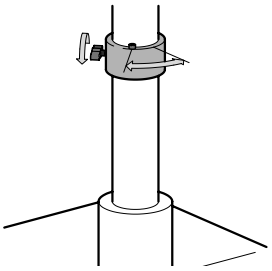

- Lower the horizontal arm on to the safety ring, with its end pointing towards you.
- Tighten the clamping screw.

Limitation

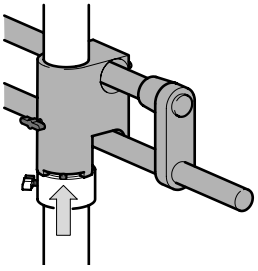

The screw head must engage the notch. It limits the lateral movement. It may not be removed, and neither may the safety ring be milled down.

If the horizontal arm is swung out beyond the limit, the outfit may fall over.

Drive housing ➜ horizontal arm

Here follow directions for fitting the drive with side-faced carrier rod. To fit the drive housing with peg, refer to page 22.

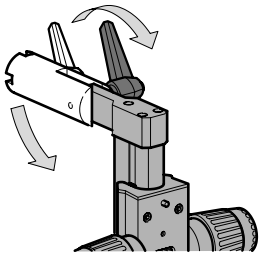

- Release the clamping lever.
- Tilt the carrier rod downwards.
- Retighten the clamping lever.

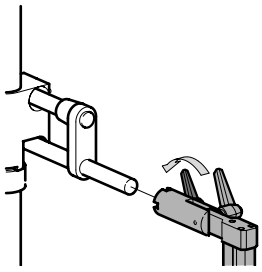

- Slide the drive housing with side-faced carrier rod on to the horizontal arm.
- Tighten the clamping lever.

The clamping levers can be positioned as required.

- Pull out the clamping lever along its axis and turn it.

Microscope carrier ➜ drive housing

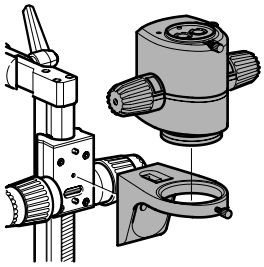

- Secure as described on page 18.

Optics carrier ➜ microscope carrier

- Secure as described on page 18.

Possibilities for adjustment

Tilting

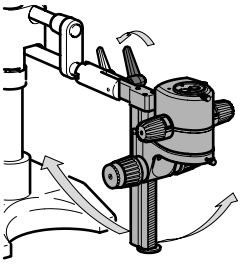

- ▶ Release the clamping lever.
- ▶ Tilt the instrument.
- ▶ Retighten the clamping lever.

Focusing with coarse/fine drive

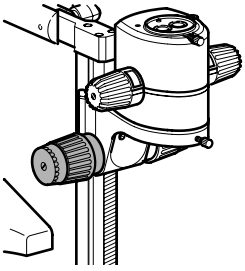

- ▶ Set the distance approximately with the larger knob.
- ▶ Fine-focus with the smaller (concentric) knob.
- ▶ Using the ring on the right-hand drive knob, adjust the ease of movement of the drive.

Altering the working distance

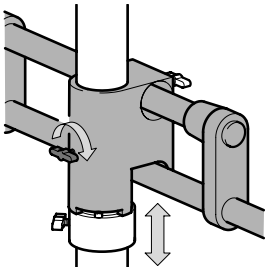

- ▶ Release the wing screw.
- ▶ Raise or lower the horizontal arm.
- ▶ Retighten the wing screw.

Reposition the safety ring (see page 24).

Sideways movement

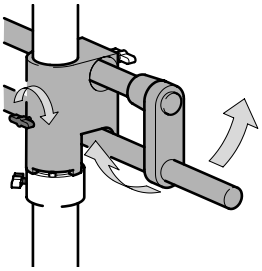

- ▶ Release the wing screw.
- ▶ Pull out or push in the horizontal arm.
- ▶ Retighten the wing screw.

During the sideways movement, respect the end-stops (see page 24).

Altering the overhang

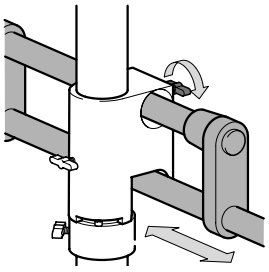

- ▶ Release the wing screw.
- ▶ Pull out or push in the horizontal arm.
- ▶ Retighten the wing screw.

Transformers

Follow the safety instructions given on page 4. Leica transformers may only be opened by authorized service personnel, and the power cable must be disconnected beforehand. The transformers are not to be used outdoors.

Regulating transformer

The 0–7V/40VA transformer powers the:

– 6V/10W and 6V/20W lamps

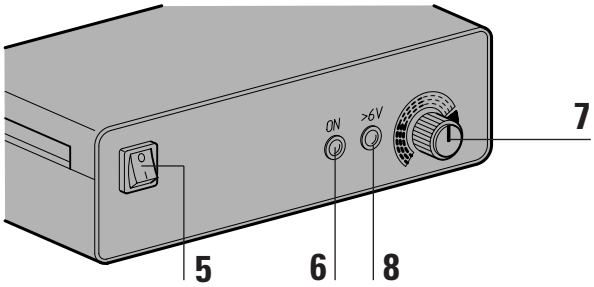

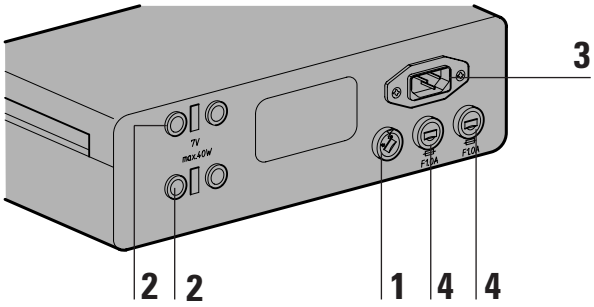

1 Voltage selector
2 Connections for two lamps (maximum combined loading 40W)
3 Connection for power cable
4 Fuse holder F1.0A
5 Power switch
I on
O off
6 ON display:
Instrument is switched on
7 Regulating knob
8 6V display: The maximum voltage has been reached.

Operation

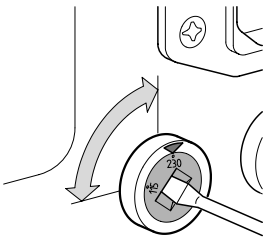

▶ Set the available voltage on the voltage selector.
– Position 115 for 110V–120V
– Position 230 for 200V–240V

▶ Connect the power cable to the socket and to the power supply.

▶ Connect the lamp. The sockets accept two lamps with a maximum combined loading of 40W.

Switching on and off

You can prolong the life of your bulb if you:

▶ first switch off the lamp by turning the rotary knob into the black range

▶ and only then switch the transformer on or off.

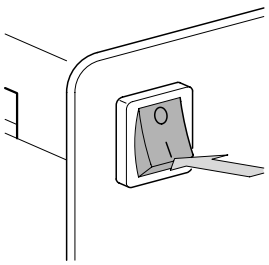

▶ Turn on the power switch. The diode shines.

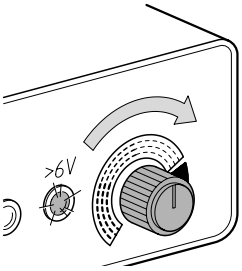

- ▶ Use the rotary knob to adjust the brightness. Above 6V the diode shines.

Changing fuses

Fuses 1.0A, 5×20 (stock no. 167 651)

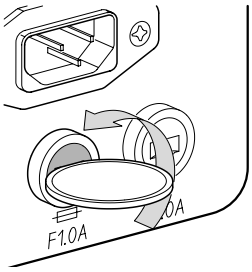

- ▶ Lamp off.
- ▶ Power switch off.
- ▶ Turn the fuse holder anticlockwise and extract it.
- ▶ Fit a new fuse and replace the fuse holder.

In the event of overload

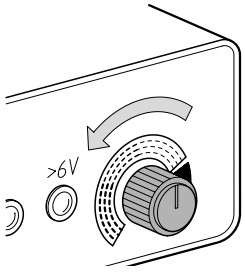

- ▶ Lamp off.
- ▶ Power switch off.
- ▶ Wait a few seconds.
- ▶ Power switch on.
- ▶ Lamp on.

Step transformer

Follow the safety instructions given on page 4.

- You can attach a 6V/10W lamp to the step transformer.

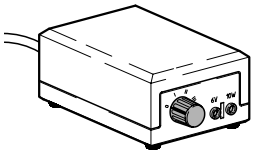

- ▶ Set the voltage selector on the rear side to 115V or 230V.
- ▶ Attach the power cable to the power supply.
- ▶ Connect the lamp.
- ▶ Adjust the brightness with the three-step switch (4V/5V/6V).

Leica L2 Cold light source

The antistatic Leica L2 cold-light source is powerful, small, compact, inexpensive and is suitable for simple observation tasks with the Leica MS5 and MZ6 stereo microscopes. In addition to one or two-arm light guides, corresponding accessories are also available for the coaxial, vertical and transmitted-light illumination methods. The Leica L2 can be directly connected on the stand.

The light guides can be mounted with arms in the threads on the microscope carrier. For instructions on mounting on the clamp for fibre-optic light guides, see page 28.

For a detailed information, refer to the separate user manual Leica L2, M2-288-0de.

When in use, the Leica L2 fibre-optic light source must always be locked into an adapter to ensure stability.

Adapter ➜ 300mm focusing drive

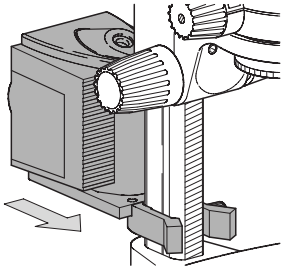

- ▶ Secure the clamp to the 300mm focusing drive by tightening the screw.
- ▶ Using the mounting rail, slide the fibre-optic light source into the adapter fork until it engages.

Adapter ➜ baseplate

When mounted on the baseplate, the light source can be used as a stand-alone unit.

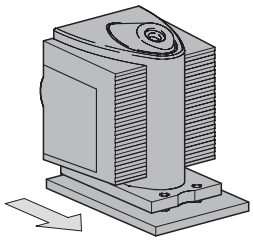

- ▶ Using the mounting rail, slide the fibre-optic light source into the adapter fork until it engages.

Fibre-optic light guide

- The clamp of the fibre-optic light guide cannot be attached to the microscope carrier AX.

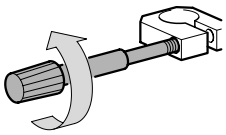

▶ Turn the clamping screw out of the clamp.

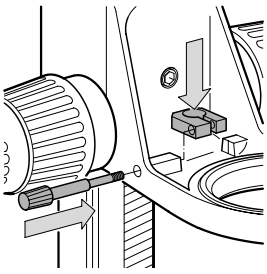

▶ Hold the clamp in the opening of the microscope carrier.

▶ Push the clamping screw through the holes in the microscope carrier and in the broader part of the clamp, and screw it finger-tight to the narrow part of the clamp.

▶ Insert the fibre-optic light guide into the clamp.

▶ Switch on the power unit.

▶ Align the light spot with the object.

▶ Tighten the clamping screw.

Cold light source Leica CLS series

The Leica CLS series is a high-performance line for high light intensity within the smallest possible space and flicker-free white light with the lowest possible thermal effect on the objects. The comprehensive line of accessories enables unlimited use. The CLS series is produced of antistatic material.

When using the ring lamp (76mm dia.) on the Plan objective 0.8× (80mm dia.), a special adapter (10 447 078) is required.

For a detailed information, refer to the separate user manual Leica CLS.

Mains (line) lamp 25W

Follow the safety instructions given on page 4.

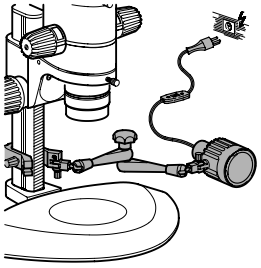

▶ Fit the lampholder and lamp as described in the right-hand column (incident lamp 6V/10W).

▶ Connect the 25W mains (line) lamp to the power supply.

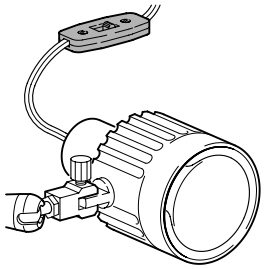

▶ Switch on the mains (line) lamp.

▶ Align the light spot with the object as described above.

6V/10W incident lamp

- The 6V/10W lamp is an inclined incident source for illuminating spatial objects
- By using two lamps, you can soften or eliminate shadows.
- At the nominal voltage (6V), the colour temperature is 2700K.

Assembly



▶ Release the clamping screw.

▶ Unfold the lampholder arm.

▶ Tighten the clamping screw.

Lampholder ➜ clamp for side-faced columns

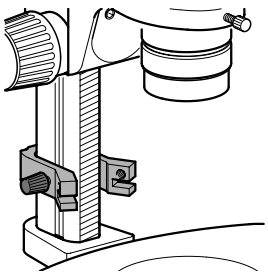

▶ Use the screw to secure the clamp to the side-faced column, either above or below the drive housing.

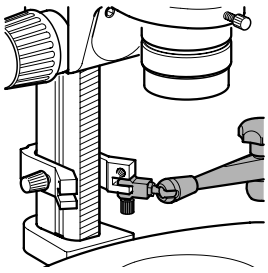

▶ Use the connector to attach the lampholder arm to the clamp, on either the right or the left.

Lampholder ➜ cast foot

▶ Fit the 25mm diameter adapter to the cast foot.

▶ Using the connector, attach the lampholder to the adapter.

Lampholder ➜ objective

- ▶ Remove the objective.
- ▶ Slide the adapter over the objective.
- ▶ Using the connector, attach the lampholder to the adapter.

Lampholder ➜ inclinable drive housing

- ▶ Unscrew a connector from the lampholder.
- ▶ Release the clamping screw.
- ▶ Using the thread, secure the lampholder to the drive housing.
- ▶ Tighten the clamping screw.

Lamp housing ➜ lampholder arm

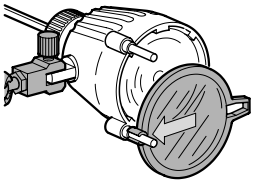

- ▶ Attach the lamp to the connector on the lampholder arm.
- ▶ Fit the filterholder, complete with KG1 heat-absorbing filter, to one of the pegs.
- A total of 4 filterholders with 50mm diameter filters can be attached.

Changing the bulb

Disconnect the lamp cable from the transformer.

Never touch the bulb when it is hot.
You may sustain burns.

- You can separate the lamp housing and the bulb socket. Line up the arrow head on the mount with its shaft on the housing.
- Do not touch the 6V/10W halogen bulb because fingermarks can cause it to crack when heated. Remove fingermarks with a cloth dipped in alcohol.

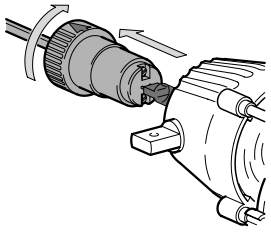

- ▶ Turn the socket to the separation position.
- ▶ Pull the socket forcibly out of the housing.
- ▶ Hold the new bulb in a cloth and push it into the socket.
- ▶ Replace the socket in the housing. The socket clicks into position.

Operating the lamp

Follow the safety instructions given on page 4.
Follow the directions for using the transformer (page 26).

- ▶ Connect the cable between the lamp housing and the transformer (page 26).

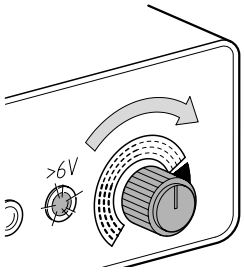

- ▶ Switch on the transformer and use the rotary knob to adjust the brightness (page 26).

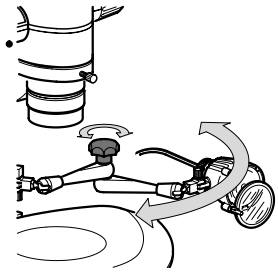

- ▶ Hold the lamp housing and release the clamping screw.
- ▶ Align the light spot with the object.
- ▶ Tighten the clamping screw.

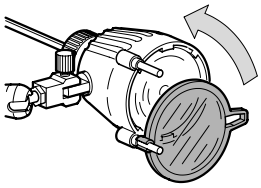

- ▶ Swing in the heat-absorbing filter.

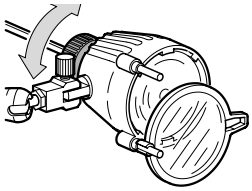

- ▶ Enlarge or reduce the size of the light spot by turning the socket of the bulb.

Illuminators

6V/20W incident lamp

- The 6V/20W lamp is an inclined incident source for illuminating spatial objects.
- By using two lamps, you can soften or eliminate shadows.
- At the nominal voltage (6V), the colour temperature is 3200K, ideal for photography. Set the regulating transformer to this nominal voltage (see page 26).

Assembly

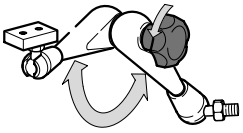

▶ Release the clamping screw.

▶ Unfold the lampholder arm.

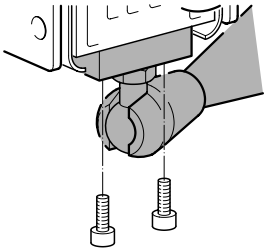

▶ Secure the lampholder to the lamp.

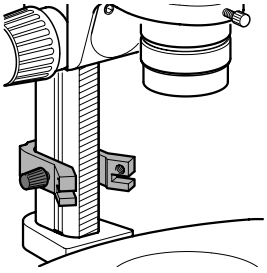

▶ Use the screw to secure the clamp to the side-faced column, either above or below the drive housing.

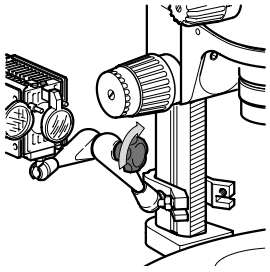

▶ Using a fork wrench and the thread connector, attach the lampholder arm to the clamp, on either the right or the left.

▶ Position the lamp.

▶ Tighten the clamping screw.

- The thread connector also enables the lampholder to be connected to the cast foot.

Diffusing and other filters

- A total of 4 filterholders with 32mm diameter filters can be attached. A heat-absorbing filter is built in.

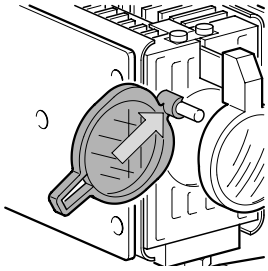

▶ Push the filterholder, complete with diffusing filter, on to one of the pegs, and swing it in.

Operating the lamp

Follow the safety instructions given on page 4. Follow the directions for using the transformer (page 26).

▶ Connect the cable between the lamp housing and the transformer (page 26).

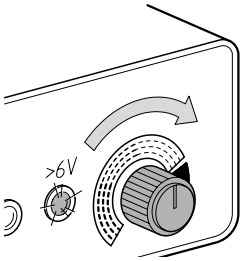

▶ Switch on the transformer and use the rotary knob to adjust the brightness.

Illuminating the object

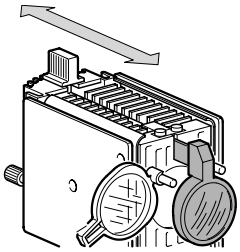

▶ Push the condenser lens forwards or backwards until the slider engages.

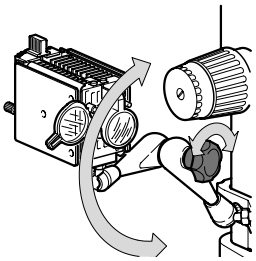

- ▶ Hold the lamp housing and release the clamping screw.
- ▶ Align the light spot with the object.
- ▶ Tighten the clamping screw.

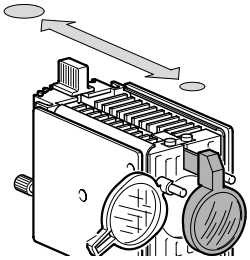

- ▶ Adjust the size of the light spot by moving the condenser lens forward or back.

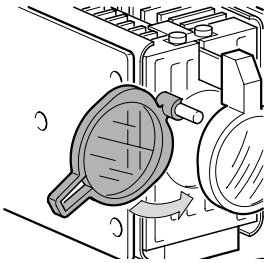

- ▶ If necessary, swing in a filter (page 30).

Changing the bulb

Disconnect the lamp cable from the transformer.

Never touch the bulb when it is hot.
You may sustain burns.

- Do not touch the 6V/20W halogen bulb because fingermarks can cause it to crack when heated. Remove fingermarks with a cloth dipped in alcohol.

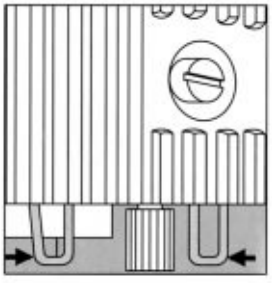

- ▶ Press the spring clips together and pull off the rear part of the housing.
- ▶ Hold the new bulb in a cloth and push it into position.
- ▶ Press the spring clips together and close the housing again.
- ▶ Centre the bulb.

Centring the bulb

The 6V/20W bulb is a powerful source of illumination.
The more carefully you set it up, the more uniform will be the lighting. For this reason, after fitting a new bulb, recentre it.

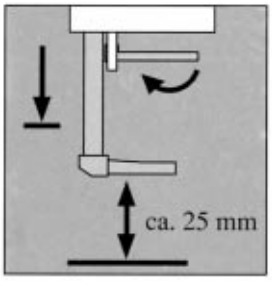

- ▶ Switch on the lamp.
- ▶ Swing out the diffusing filter.
- ▶ Pull the condenser lens fully out.
- ▶ Hold the lamp and release the clamping screw.
- ▶ Point the lamp vertically downwards at a white sheet of paper so that two filament images are seen.

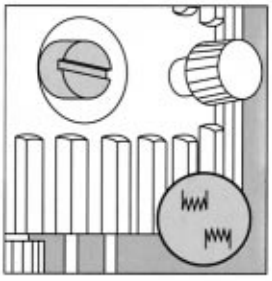

- ▶ Tighten the clamping screw.
- ▶ Using the slotted screw, bring the two filament images into focus.

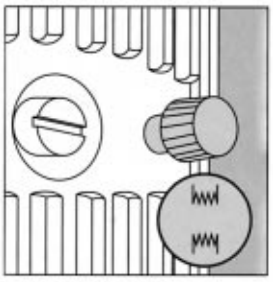

- ▶ Displace the filament images so that they are opposite to one another, but in contact.
- ▶ Swing in the diffusing filter once more.

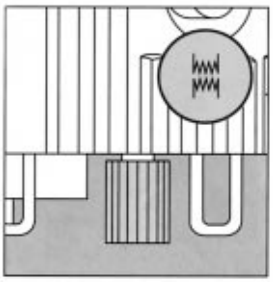

Illuminators

Coaxial illuminator

- This illuminator is for observing and photographing flat, highly-reflecting objects such as wafers, integrated circuits and polished metal sections.
- The coaxial incident light housing fits like an accessory tube between the optics carrier and the binocular tube, or between the optics carrier and the phototube (page 33).

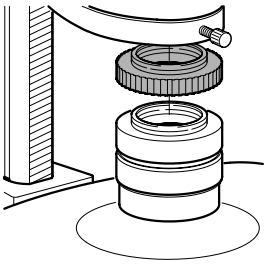

- For the MZ7$_5$ and MZ9$_5$ it is an advantage to attach the objective to the spacer ring (page 16). You will then be able to illuminate the largest field of view completely.

- A quarter-wave plate is required when the microscope carrier AX is used in the vertical position.

▶ Using the clamping screw, secure the quarter-wave plate to the objective mount.

▶ Using the milled ring, turn the quarter-wave plate until the required effect is obtained.

Near-vertical illuminator

- The near-vertical (approx. 5°) light beam illuminates depressions and cavities.
- Shadowing by tools is eliminated.
- This illuminator can only be used with the achromatic objectives having focal lengths 100mm, 150mm, 175mm and 200mm.
- Spacer rings are required for the Leica MZ7$_5$, MZ9$_5$, MZ12$_5$ and MZAPO in order to secure the near-vertical illuminator to the optics carrier (page 16).

▶ Screw off the objective.

▶ Release the clamping screw and remove the adapter ring from the incident-light housing for near-vertical light.

For MS5, MZ6:

▶ Screw the adapter ring on to the microscope carrier.

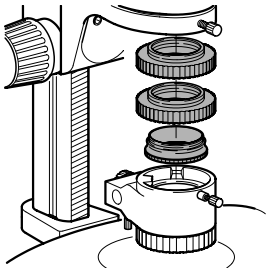

For Leica MZ7$_5$, MZ9$_5$, MZ12$_5$, MZAPO:

▶ First screw the spacer ring(s), page 16, on to the microscope carrier, then screw the adapter ring to the spacer ring.

▶ Secure the incident-light housing to the adapter ring.

▶ Screw the achromatic objective into position (see left side).

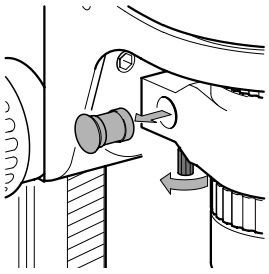

▶ Release the left or right clamping screw and change the cover plate accordingly.

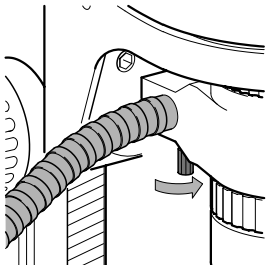

▶ Attach the fibre-optic light guide on either the left or the right.

To switch on the cold-light illuminator, refer to the user manual provided with it.

No light?

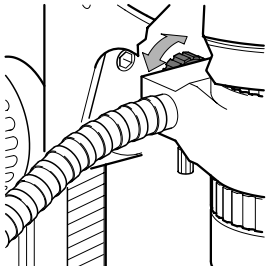

▶ Turn the rotary knob.

- A movable prism directs the light from the left or right outlet on to the object.

Accessories

Double-iris diaphragm, drawing tube, discussion tube

Fitting

- All accessory tubes which fit between the optics carrier and the binocular tube are fitted in the same manner.
- In the dovetail ring of the optics carrier is a locating screw which must engage the notch in the accessory (page 19). This is best accomplished by moving the accessory slightly from side to side.

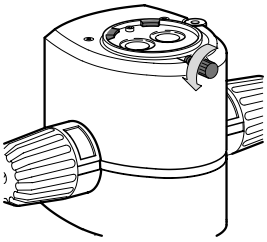

▶ Release the clamping screw.

▶ Introduce the accessory tube into the dovetail ring in the same manner as the binocular tube (page 19) and move it slightly from side to side until the locating screw engages the notch.

▶ Tighten the clamping screw.

▶ Fit the binocular tube on the accessory tube in the same manner.

Double-iris diaphragm

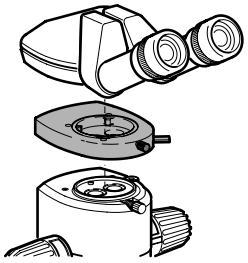

The double-iris diaphragm can be fitted between the optics carrier and either the binocular tube or the video-/phototube.

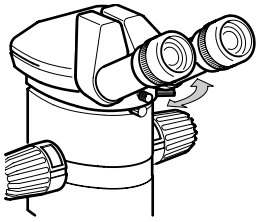

Set the lever to OPEN:
The double-iris diaphragm (aperture diaphragm) is open.

The depth of field increases as the lever is moved from OPEN to 1. Remember, however, that

– brightness decreases, so exposure times become longer

– resolution deteriorates.

Drawing tube

- The drawing tube is for both left-handers and right-handers. Fit the mirror on the left- or right-hand side of the optics carrier.

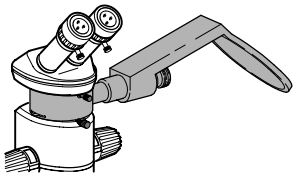

▶ Fit the drawing tube between the optics carrier and the binocular tube as described on the left of this page.

▶ Place a sheet of paper beneath the mirror.

▶ Use a table lamp to illuminate the paper.

Drawing

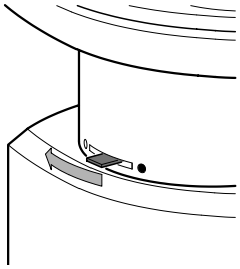

▶ Move the lever to the circle.

▶ Look into the binocular tube, position the object, and focus on it.

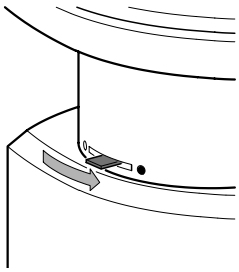

▶ Move the lever to the black spot.

▶ Look into the binocular tube and balance the brightnesses so that the object, the drawing surface and the pencil are all seen together.

- In general, the paper needs to be illuminated strongly, but the object only weakly.

▶ Move the lens mount of the drawing tube forwards or backwards until the drawing surface is sharply imaged.

▶ Now you can draw the feature.

- If you place a graduated scale beneath the object and draw its intervals as well, you will easily determine the image scale on the paper.

Discussion tube

Down the discussion tube two observers see the same erect, laterally-correct, three-dimensional image.

The assembly and use of the discussion tube are described in the separate user manual M2-263-004.

Video-/phototubes, TV, video, photography, digital imaging

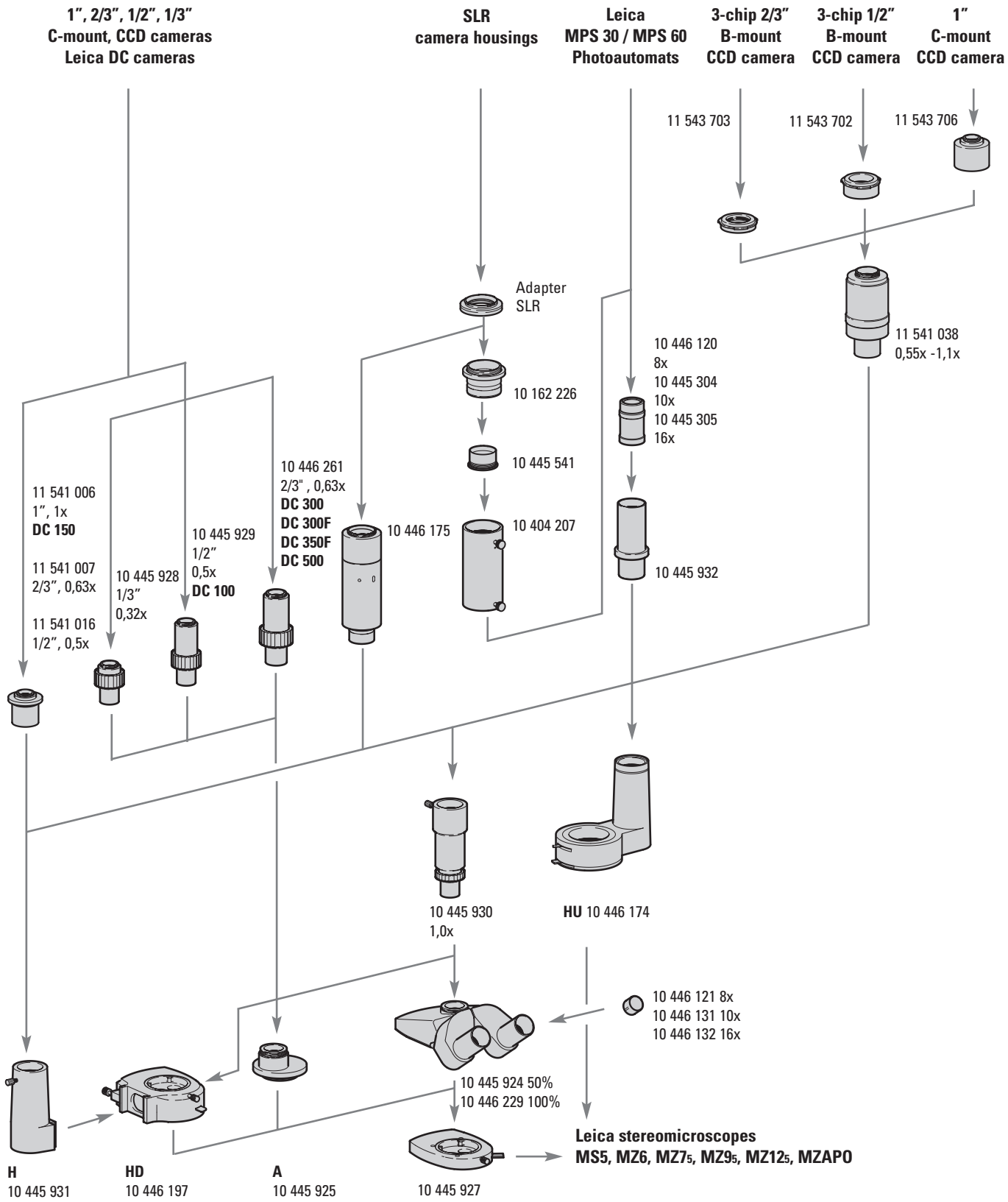

Video-/phototubes

- Video-/phototubes are designed to support modular photomicrography systems, and Leica digital, video, film or SLR cameras.
- The video-/phototubes, the modular photomicrographic systems and the digital cameras are detailed in a separate user manual, along with instructions for their assembly and use.
- When you are not taking photographs, engage the observation beam path.
- Accessories such as the coaxial incident illuminator always fit between the stereomicroscope and the phototube.

Video-/phototube HD

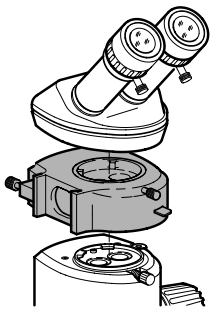

▶ Use the video/phototube HD between the optics carrier and the binocular tube (page 33).

Switchover

▶ Observation: Push lever in.

▶ Documentation: Pull lever out.

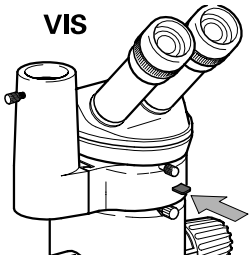

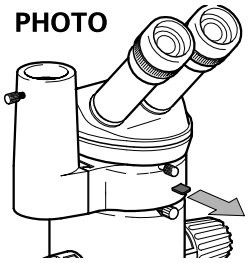

Light partition for "observation"

- 50% to both eyepieces
- 50% in the left-hand video/photo beam path
- 50% in the right-hand video/photo beam path

Light partition for "documentation"

- 100% to left video-/photo beam path
- 50% to right eyepiece
- 50% to right video beam path

Camera set-up, variants

As shown in the set-up diagram on page 34, there are various possibilities for adapting an MPS, video, digital or SLR camera.

Example:

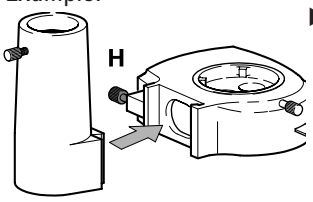

▶ Fit the video-/photo objective H on the left-hand side.

With this equipment you can, for example, attach an MPS camera (see detailed description in the MPS user manual), an SLR camera, or even a digital or video camera.

Example:
With this equipment you can, for example, attach a digital or video camera.

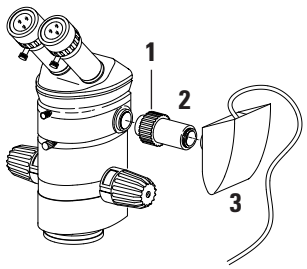

▶ Fit the video objective (2) on a Leica DC digital camera (3) with the C-mount connection.

▶ Connect the video objective with the mounted Leica DC digital camera on the right output of the video/phototube.

▶ Tighten the coupling ring (1).

Trinocular video-/phototube 50%

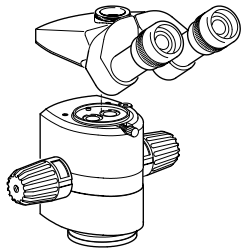

▶ Fit the trinocular video/-phototube on the optics carrier in place of the binocular observation tube (page 19).

Partition of light

- 50% to both eyepieces
- 50% in the video-/photo beam path

Stop

Before taking the photograph, close off the right eyepiece to keep out stray light.

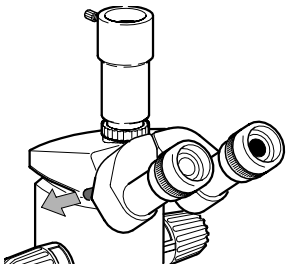

▶ Move lever to the left.

Trinocular video-/phototube 100%

Fitting: See “Trinocular video-/phototube 50%”.

Switchover

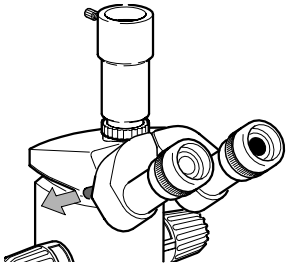

▶ Observation; Push in lever.

▶ Photography: Pull out lever to the left.

Light partition setting “VIS”

- 100% to both eyepieces.

Light partition setting “PHOT”

- 100% to the left eyepiece
- 100% to the video-/photo beam path.

Camera set-up, variants

As shown in the set-up diagram on page 34, there are various possibilities for adapting an MPS, video, digital or SLR camera.

Example:
With this equipment you can, for example, attach an MPS camera (see detailed description in the MPS user manual), an SLR camera, or even a digital or video camera.

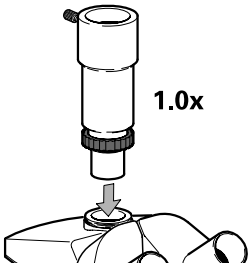

▶ Fit the 1.0× video-/photo objective

Example:
With this equipment you can, for example, attach a digital or video camera.

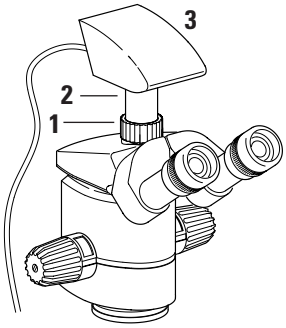

▶ Fit the video objective (2) on a Leica DC digital camera (3) with the C-mount connection.

▶ Connect the video objective with the mounted Leica DC digital camera on the right output of the video/phototube.

▶ Tighten the coupling ring (1).

Video-/phototube HU

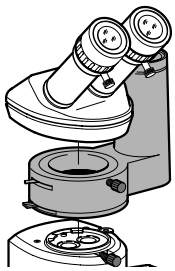

▶ Fit the video-/phototube HU to the Leica stereomicroscope in accordance with the instructions.

▶ Position the photo outlet on either the right or the left.

Switchover

▶ Observation: Push lever to “VIS”

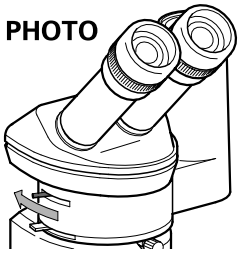

▶ Documentation: Set lever to “PHOT”.

Light partition in setting “VIS”

- 100% to both eyepieces.

Light partition in setting “PHOT”

- 50% to both eyepieces.
- 50% available for video-/photo.

Video-/phototube A

This tube does not permit stereoscopic observation. The image is studied either in the camera viewfinder, or down the focusing telescope of the camera. In the video-/photo beam path, 100% light is available.

Attachment for vertical and oblique observation

- The attachment for vertical and oblique observation enables spatial objects to be observed from above, and also from all round at an angle of 45°.
- The microscope carrier must be fitted in the lower position 1 (page 18).
- For MS5, MZ6: Fit the 1.0× achromatic objective by screwing its adapter ring directly into the optics carrier.
- Spacer rings are required for the Leica MZ7$_5$, MZ9$_5$, MZ12$_5$ and MZAPO in order to secure the attachment for vertical and oblique observation to the optics carrier (page 16).
- Only usable with 1.0× achromatic objective.

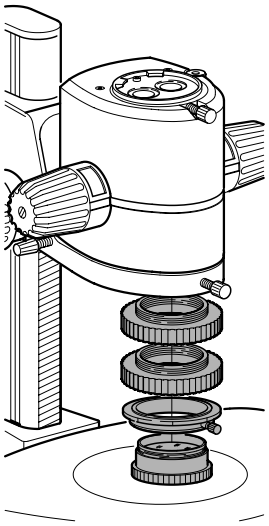

Stages

The 120mm diam. stages can be used in those incident- and transmitted-light stands which have a 120mm diam. port.

Gliding stage

The gliding stage can be moved in all directions and rotated completely.

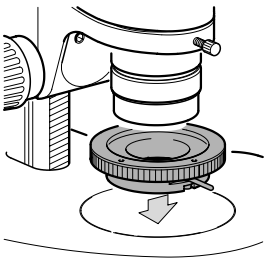

▶ Place the 120mm diam. gliding stage in the 120mm port and secure it with the eccentric lever.

▶ Insert the 120mm diam. glass stage plate or the black/white stage plate.

Cup stage

- The cup stage can be inclined as required.
- You can secure objects to its rubberized upper surface with needles.
- The movable holder accepts petri dishes.

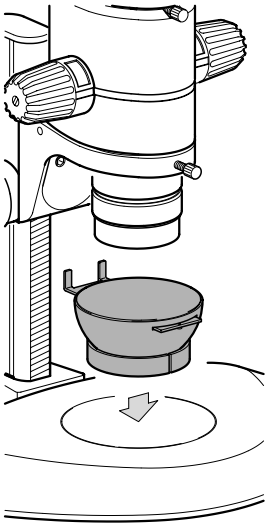

▶ Place the 120mm diam. support ring in the 120mm port.

▶ Place the cup stage on it.

Polarization, transmitted light

The analyzer, in combination with either the rotatable polarization stage or the polarizer on glass stage plate, enables double-refracting materials to be studied. These can include organic crystals, mineral grains, thin sections of rock or bone, polymers, stressed glass, and liquid crystals.

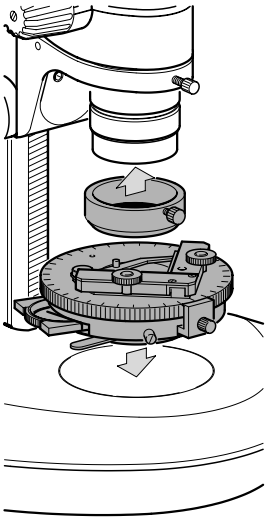

Notes

Tips and hints: What to do if …

The field of view is partly shadowed.

Remedy:

- Set the interpupillary distance correctly (page 9).
- Locate the eyepoint (page 9).

The image does not stay in focus.

Remedy:

- Fit the eyepieces correctly (page 19).
- Adjust your dioptric settings exactly as described (page 12).

The focusing drifts downwards or can be moved only with difficulty.

Remedy:

- Adjust the ease of movement (pages 11, 22, 24).

If an electrical fault develops, first check the following:

- Is the voltage selector set correctly (bright-field transmitted light stand, page 21; transformer, page 26)?
- Is the power switch on?
- Is the power cable attached correctly?
- Are all connecting cables attached correctly?
- Are the fuses in order?

The image is too dark.

Remedy:

- Turn up the regulating knob high enough (bright-field transmitted light stand, page 21; transformer, page 26).
- Open the double-iris diaphragm of the phototube.

TV, photography

The image on the screen is too dark.

Remedy:

- Adjust the video camera / monitor system in accordance with the directions of the manufacturer.
- Refer to the remedies listed above under “The image is too dark”.

Unsharp photographs.

Remedy:

- Focus precisely (page 11).
- Adjust your dioptric settings exactly as described (page 12).

Colour photographs have a yellow cast.

Remedy:

- Use artificial-light film.
- Turn the regulating knob of the transformer clockwise to the position of maximum voltage (bright field transmitted-light stand, page 21; transformer, page 26).

Care

In this section

we will show you how to look after your microscope and how to clean it.

We guarantee the quality.

You are working with a high-precision, high-performance instrument.

We therefore guarantee the quality of each of our instruments. Our guarantee covers all faults in materials and manufacture. It does not, however, cover damage resulting from careless or improper handling.

Please handle your valuable optical instrument with respect. It will then fulfil its function with the same precision for decades. Our instruments are famous for that!



If, contrary to expectations, your stereomicroscope develops a fault, please call in a specialist – contact your local Leica agent or Leica Microsystems Ltd., Heerbrugg, Switzerland.

Protect your instruments



- from damp, vapours, acids, alkalis and corrosive substances, and keep chemicals away from the instruments.



- from misuse. Never dismantle optical systems or mechanical parts unless instructions for doing so are given in the user manual.



- from oil and grease. Do not grease guide surfaces or mechanical parts.

Dust and dirt will affect the quality of your results.

Therefore:



- ▶ Put a dust cover over the instrument during breaks in work.
- ▶ Use dust caps to protect tube openings, tubes without eyepieces, and eyepieces.



- ▶ Remove dust with a pneumatic rubber bulb or with a soft brush.



- ▶ Clean objectives and eyepieces with special optic cleaning cloths and with pure alcohol.
- ▶ When accessories are not being used, protect them against dust.

Cleaning polymer components

Some components are made of polymer, or are polymer-coated. They are therefore pleasant and convenient to handle.
The use of unsuitable cleaning agents and techniques can damage polymers, so always observe the following rules:

Never clean polymers this way



- Never clean in an ultrasonic bath. The polymer can become brittle and later break.
- Never use corrosive cleaning agents or ones containing acetone.
- Never use solvents for cleaning (except for ethanol and isopropanol).

You can clean polymers harmlessly

- with warm soapy water, wiping down afterwards with distilled water.
- with ethanol (industrial alcohol) and isopropanol.



When cleaning with ethanol or isopropanol, adhere to the appropriate safety regulations.

Notes

Total magnification and field diameter

M_O Magnification of objective
M_E Magnification of eyepiece
z Magnification changer position
q Tube factor, e.g. 1.5× for coaxial incident light, 45° Ergotube™ 1.6×
r Factor 1.25× if the planachromatic and planapochromatic objectives of the MZ12$_5$/MZAPO are used on the MS5, MZ6, MZ7$_5$ or MZ9$_5$
N_{FOV} Field number of eyepiece. The field numbers are printed on the eyepieces: 10× = 21, 16× = 14, 25× = 9.5, 40× = 6.

Example

M_O Eyepiece 1.0×
M_E 25×/9.5 eyepiece
z Zoom position 4.0
q Tube factor 1.5× (because of coaxial illuminator).
r Factor 1.25×

Magnification down binocular tube:

$$M_{TOT\ VIS} = M_O \times M_E \times z \times q \times r \qquad 1.0 \times 25 \times 4.0 \times 1.5 \times 1.25 = 187.5 \times$$

Diameter of field of view:

$$\varnothing_{OF}: \frac{N_{FOV}}{M_O \times z \times q \times r} \qquad \frac{9.5}{1.0 \times 4.0 \times 1.5 \times 1.25} = 1.3\ mm$$

Optical data, Leica MS5, MZ6

Objective		1.0 × Plan 1.0 × Achromat 0.8 × Plan		1.0 × Planapo		1.6 × Planapo 2.0 × Achromat		0.63 × Planapo 0.8 × Achromat		0.5 × Plan 0.63 × Achromat		0.32 × Achromat		0.5 × Achromat		1.5 × Achromat	
		Working distance															
Eyepiece	Magnification changer position	81 Plan 89 Achromat 112 Plan		55 Planapo		19 Planapo 27 Achromat		97 Planapo 112 Achromat		135 Plan 149 Achromat		297 Achromat		187 Achromat		49 Achromat	
		Total magnification	Field diameter (mm)	Total magnification	Field diameter (mm)	Total magnification	Field diameter (mm)	Total magnification	Field diameter (mm)	Total magnification	Field diameter (mm)	Total magnification	Field diameter (mm)	Total magnification	Field diameter (mm)	Total magnification	Field diameter (mm)
10×/21B	0.63	6.3	33.3	7.9	26.6	12.6	16.7	5.0	42.0	3.9	53.8	2.0	105.0	3.2	65.6	9.4	22.3
	0.8	8.0	26.3	10.0	21.0	16.0	13.1	6.4	32.8	5.0	42.0	2.5	84.0	4.0	52.5	11.9	17.6
	1.0	10.0	21.0	12.5	16.8	20.0	10.5	8.0	26.3	6.3	33.3	3.1	67.7	5.0	42.0	14.9	14.1
	1.25	12.5	16.8	15.6	13.5	25.0	8.4	10.0	21.0	7.8	26.9	3.9	53.8	6.3	33.3	18.7	11.2
	1.6	16.0	13.1	20.0	10.5	32.0	6.6	12.8	16.4	10.0	21.0	5.0	42.0	8.0	26.3	23.9	8.8
	2.0	20.0	10.5	25.0	8.4	40.0	5.3	16.0	13.1	12.5	16.8	6.3	33.3	10.0	21.0	29.9	7.0
	2.5	25.0	8.4	31.3	6.7	50.0	4.2	20.0	10.5	15.6	13.5	7.8	26.9	12.5	16.8	37.3	5.6
	3.2	32.0	6.6	40.0	5.3	64.0	3.3	25.6	8.2	20.0	10.5	10.0	21.0	16.0	13.1	47.8	4.4
	4.0	40.0	5.3	50.0	4.2	80.0	2.6	32.0	6.6	25.0	8.4	12.5	16.8	20.0	10.5	59.7	3.5
16×/14B	0.63	10.1	22.2	12.6	17.8	20.2	11.1	8.1	27.7	6.3	35.6	3.2	70.0	5.0	44.8	15.0	14.9
	0.8	12.8	17.5	16.0	14.0	25.6	8.8	10.2	22.0	8.0	28.0	4.0	56.0	6.4	35.0	19.1	11.7
	1.0	16.0	14.0	20.0	11.2	32.0	7.0	12.8	17.5	10.0	22.4	5.0	44.8	8.0	28.0	23.9	9.4
	1.25	20.0	11.2	25.0	9.0	40.0	5.6	16.0	14.0	12.5	17.9	6.3	35.6	10.0	22.4	29.9	7.5
	1.6	25.6	8.8	32.0	7.0	51.2	4.4	20.5	10.9	16.0	14.0	8.0	28.0	12.8	17.5	38.2	5.9
	2.0	32.0	7.0	40.0	5.6	64.0	3.5	25.6	8.8	20.0	11.2	10.0	22.4	16.0	14.0	47.8	4.7
	2.5	40.0	5.6	50.0	4.5	80.0	2.8	32.0	7.0	25.0	9.0	12.5	17.9	20.0	11.2	59.7	3.8
	3.2	51.2	4.4	64.0	3.5	102.4	2.2	41.0	5.5	32.0	7.0	16.0	14.0	25.6	8.8	76.4	2.9
	4.0	64.0	3.5	80.0	2.8	128.0	1.8	51.2	4.4	40.0	5.6	20.0	11.2	32.0	7.0	95.5	2.3
25×/9.5B	0.63	15.8	15.0	19.7	12.1	31.5	7.5	12.6	18.8	9.8	24.2	4.9	48.5	7.9	30.1	23.5	10.1
	0.8	20.0	11.9	25.0	9.5	40.0	5.9	16.0	14.8	12.5	19.0	6.3	37.7	10.0	23.8	29.9	7.9
	1.0	25.0	9.5	31.3	7.6	50.0	4.8	20.0	11.9	15.6	15.2	7.8	30.4	12.5	19.0	37.3	6.4
	1.25	31.3	7.6	39.1	6.1	62.5	3.8	25.0	9.5	19.5	12.2	9.8	24.2	15.6	15.2	46.6	5.1
	1.6	40.0	5.9	50.0	4.8	80.0	3.0	32.0	7.4	25.0	9.5	12.5	19.0	20.0	11.9	59.7	4.0
	2.0	50.0	4.8	62.5	3.8	100.0	2.4	40.0	5.9	31.3	7.6	15.6	15.2	25.0	9.5	74.6	3.2
	2.5	62.5	3.8	78.1	3.0	125.0	1.9	50.0	4.8	39.1	6.1	19.5	12.2	31.3	7.6	93.3	2.5
	3.2	80.0	3.0	100.0	2.4	160.0	1.5	64.0	3.7	50.0	4.8	25.0	9.5	40.0	5.9	119.4	2.0
	4.0	100.0	2.4	125.0	1.9	200.0	1.2	80.0	3.0	62.5	3.8	31.3	7.6	50.0	4.8	149.3	1.6
40×/6B	0.63	25.2	9.5	31.5	7.6	50.4	4.8	20.2	11.9	15.8	15.2	7.9	30.4	12.6	19.0	37.6	6.4
	0.8	32.0	7.5	40.0	6.0	64.0	3.8	25.6	9.4	20.0	12.0	10.0	24.0	16.0	15.0	47.8	5.0
	1.0	40.0	6.0	50.0	4.8	80.0	3.0	32.0	7.5	25.0	9.6	12.5	19.2	20.0	12.0	59.7	4.0
	1.25	50.0	4.8	62.5	3.8	100.0	2.4	40.0	6.0	31.3	7.7	15.6	15.4	25.0	9.6	74.6	3.2
	1.6	64.0	3.8	80.0	3.0	128.0	1.9	51.2	4.7	40.0	6.0	20.0	12.0	32.0	7.5	95.5	2.5
	2.0	80.0	3.0	100.0	2.4	160.0	1.5	64.0	3.8	50.0	4.8	25.0	9.6	40.0	6.0	119.4	2.0
	2.5	100.0	2.4	125.0	1.9	200.0	1.2	80.0	3.0	62.5	3.8	31.3	7.7	50.0	4.8	149.3	1.6
	3.2	128.0	1.9	160.0	1.5	256.0	0.9	102.4	2.3	80.0	3.0	40.0	6.0	64.0	3.8	191.0	1.3
	4.0	160.0	1.5	200.0	1.2	320.0	0.8	128.0	1.9	100.0	2.4	50.0	4.8	80.0	3.0	238.8	1.0

MS5: Positions 0.63, 1.0. 1.6, 2.5, 4

When using the Plan and Planapo objectives MZ12$_5$, the magnification is increased by the factor 1.25×.

Optical data, Leica MZ7$_5$, MZ9$_5$

Objective		1.0× Plan 1.0× Achromat		1.0× Planapo		1.6× Planapo 2.0× Achromat		0.63× Planapo 0.8× Achromat		0.5× Plan 0.63× Achromat		0.32× Achromat		0.5× Achromat		1.5× Achromat	
		Working distance															
		81 Plan 89 Achromat		55 Planapo		19 Planapo 27 Achromat		97 Planapo 112 Achromat		135 Plan 149 Achromat		297 Achromat		187 Achromat		49 Achromat	
Eyepiece	Magnification changer position	Total magnification	Field diameter (mm)	Total magnification	Field diameter (mm)	Total magnification	Field diameter (mm)	Total magnification	Field diameter (mm)	Total magnification	Field diameter (mm)	Total magnification	Field diameter (mm)	Total magnification	Field diameter (mm)	Total magnification	Field diameter (mm)
10×/21B	0.63	6.3	33.3	7.9	26.6	12.6	16.7	5.0	42.0	3.9	53.8	2.0	105.0	3.2	65.6	9.4	22.3
	0.8	8.0	26.3	10.0	21.0	16.0	13.1	6.4	32.8	5.0	42.0	2.5	84.0	4.0	52.5	11.9	17.6
	1.0	10.0	21.0	12.5	16.8	20.0	10.5	8.0	26.3	6.3	33.3	3.1	67.7	5.0	42.0	14.9	14.1
	1.25	12.5	16.8	15.6	13.5	25.0	8.4	10.0	21.0	7.8	26.9	3.9	53.8	6.3	33.3	18.7	11.2
	1.6	16.0	13.1	20.0	10.5	32.0	6.6	12.8	16.4	10.0	21.0	5.0	42.0	8.0	26.3	23.9	8.8
	2.0	20.0	10.5	25.0	8.4	40.0	5.3	16.0	13.1	12.5	16.8	6.3	33.3	10.0	21.0	29.9	7.0
	2.5	25.0	8.4	31.3	6.7	50.0	4.2	20.0	10.5	15.6	13.5	7.8	26.9	12.5	16.8	37.3	5.6
	3.2	32.0	6.6	40.0	5.3	64.0	3.3	25.6	8.2	20.0	10.5	10.0	21.0	16.0	13.1	47.8	4.4
	4.0	40.0	5.3	50.0	4.2	80.0	2.6	32.0	6.6	25.0	8.4	12.5	16.8	20.0	10.5	59.7	3.5
	5.0	50.0	4.2	62.5	3.4	100.0	2.1	40.0	5.3	31.3	6.7	15.6	13.5	25.0	8.4	74.6	2.8
	6.0*	60.0	3.5	75.0	2.8	120.0	1.8	48.0	4.4	37.5	5.6	18.8	11.2	30.0	7.0	89.6	2.3
16×/14B	0.63	10.1	22.2	12.6	17.8	20.2	11.1	8.1	27.7	6.3	35.6	3.2	70.0	5.0	44.8	15.0	14.9
	0.8	12.8	17.5	16.0	14.0	25.6	8.8	10.2	22.0	8.0	28.0	4.0	56.0	6.4	35.0	19.1	11.7
	1.0	16.0	14.0	20.0	11.2	32.0	7.0	12.8	17.5	10.0	22.4	5.0	44.8	8.0	28.0	23.9	9.4
	1.25	20.0	11.2	25.0	9.0	40.0	5.6	16.0	14.0	12.5	17.9	6.3	35.6	10.0	22.4	29.9	7.5
	1.6	25.6	8.8	32.0	7.0	51.2	4.4	20.5	10.9	16.0	14.0	8.0	28.0	12.8	17.5	38.2	5.9
	2.0	32.0	7.0	40.0	5.6	64.0	3.5	25.6	8.8	20.0	11.2	10.0	22.4	16.0	14.0	47.8	4.7
	2.5	40.0	5.6	50.0	4.5	80.0	2.8	32.0	7.0	25.0	9.0	12.5	17.9	20.0	11.2	59.7	3.8
	3.2	51.2	4.4	64.0	3.5	102.4	2.2	41.0	5.5	32.0	7.0	16.0	14.0	25.6	8.8	76.4	2.9
	4.0	64.0	3.5	80.0	2.8	128.0	1.8	51.2	4.4	40.0	5.6	20.0	11.2	32.0	7.0	95.5	2.3
	5.0	80.0	2.8	100.0	2.2	160.0	1.4	64.0	3.5	50.0	4.5	25.0	9.0	40.0	5.6	119.4	1.9
	6.0*	96.0	2.3	120.0	1.9	192.0	1.2	76.8	2.9	60.0	3.7	30.0	7.5	48.0	4.7	143.3	1.6
25×/9.5B	0.63	15.8	15.0	19.7	12.1	31.5	7.5	12.6	18.8	9.8	24.2	4.9	48.5	7.9	30.1	23.5	10.1
	0.8	20.0	11.9	25.0	9.5	40.0	5.9	16.0	14.8	12.5	19.0	6.3	37.7	10.0	23.8	29.9	7.9
	1.0	25.0	9.5	31.3	7.6	50.0	4.8	20.0	11.9	15.6	15.2	7.8	30.4	12.5	19.0	37.3	6.4
	1.25	31.3	7.6	39.1	6.1	62.5	3.8	25.0	9.5	19.5	12.2	9.8	24.2	15.6	15.2	46.6	5.1
	1.6	40.0	5.9	50.0	4.8	80.0	3.0	32.0	7.4	25.0	9.5	12.5	19.0	20.0	11.9	59.7	4.0
	2.0	50.0	4.8	62.5	3.8	100.0	2.4	40.0	5.9	31.3	7.6	15.6	15.2	25.0	9.5	74.6	3.2
	2.5	62.5	3.8	78.1	3.0	125.0	1.9	50.0	4.8	39.1	6.1	19.5	12.2	31.3	7.6	93.3	2.5
	3.2	80.0	3.0	100.0	2.4	160.0	1.5	64.0	3.7	50.0	4.8	25.0	9.5	40.0	5.9	119.4	2.0
	4.0	100.0	2.4	125.0	1.9	200.0	1.2	80.0	3.0	62.5	3.8	31.3	7.6	50.0	4.8	149.3	1.6
	5.0	125.0	1.9	156.3	1.5	250.0	1.0	100.0	2.4	78.1	3.0	39.1	6.1	62.5	3.8	186.6	1.3
	6.0*	150.0	1.6	187.5	1.3	300.0	0.8	120.0	2.0	93.8	2.5	46.9	5.1	75.0	3.2	223.9	1.1
40×/6B	0.63	25.2	9.5	31.5	7.6	50.4	4.8	20.2	11.9	15.8	15.2	7.9	30.4	12.6	19.0	37.6	6.4
	0.8	32.0	7.5	40.0	6.0	64.0	3.8	25.6	9.4	20.0	12.0	10.0	24.0	16.0	15.0	47.8	5.0
	1.0	40.0	6.0	50.0	4.8	80.0	3.0	32.0	7.5	25.0	9.6	12.5	19.2	20.0	12.0	59.7	4.0
	1.25	50.0	4.8	62.5	3.8	100.0	2.4	40.0	6.0	31.3	7.7	15.6	15.4	25.0	9.6	74.6	3.2
	1.6	64.0	3.8	80.0	3.0	128.0	1.9	51.2	4.7	40.0	6.0	20.0	12.0	32.0	7.5	95.5	2.5
	2.0	80.0	3.0	100.0	2.4	160.0	1.5	64.0	3.8	50.0	4.8	25.0	9.6	40.0	6.0	119.4	2.0
	2.5	100.0	2.4	125.0	1.9	200.0	1.2	80.0	3.0	62.5	3.8	31.3	7.7	50.0	4.8	149.3	1.6
	3.2	128.0	1.9	160.0	1.5	256.0	0.9	102.4	2.3	80.0	3.0	40.0	6.0	64.0	3.8	191.0	1.3
	4.0	160.0	1.5	200.0	1.2	320.0	0.8	128.0	1.9	100.0	2.4	50.0	4.8	80.0	3.0	238.8	1.0
	5.0	200.0	1.2	250.0	1.0	400.0	0.6	160.0	1.5	125.0	1.9	62.5	3.8	100.0	2.4	298.5	0.8
	6.0*	240.0	1.0	300.0	0.8	480.0	0.5	192.0	1.3	150.0	1.6	75.0	3.2	120.0	2.0	358.2	0.7

* Position 6.0 for MZ9$_5$ only

When using the Plan and Planapo objectives MZ12$_5$, the magnification is increased by the factor 1.25×.

Optical data. Leica MZ12$_5$, MZAPO

Objective		1.0× Plan 1.0× Planapo		0.5× Plan		0.63× Planapo		0.8× Plan		1.6× Planapo	
		Working distance									
		60 Plan 55 Planapo		135 Plan		97 Planapo		112 Plan		19 Planapo	
Eyepiece	Magnification changer position	Total magnification	Field diameter (mm)	Total magnification	Field diameter (mm)	Total magnification	Field diameter (mm)	Total magnification	Field diameter (mm)	Total magnification	Field diameter (mm)
10×/21B	0.8	8.0	26.3	4.0	52.5	5.1	41.2	6.4	32.8	12.8	16.4
	1.0	10.0	21.0	5.0	42.0	6.4	32.8	8.0	26.3	16.0	13.1
	1.25	12.5	16.8	6.3	33.3	8.0	26.3	10.0	21.0	20.0	10.5
	1.6	16.0	13.1	8.0	26.3	10.2	20.6	12.8	16.4	25.6	8.2
	2.0	20.0	10.5	10.0	21.0	12.8	16.4	16.0	13.1	32.0	6.6
	2.5	25.0	8.4	12.5	16.8	16.0	13.1	20.0	10.5	40.0	5.3
	3.2	32.0	6.6	16.0	13.1	20.5	10.2	25.6	8.2	51.2	4.1
	4.0	40.0	5.3	20.0	10.5	25.6	8.2	32.0	6.6	64.0	3.3
	5.0	50.0	4.2	25.0	8.4	32.0	6.6	40.0	5.3	80.0	2.6
	6.3	63.0	3.3	31.5	6.7	40.3	5.2	50.4	4.2	100.8	2.1
	8.0	80.0	2.6	40.0	5.3	51.2	4.1	64.0	3.3	128.0	1.6
	10.0*	100.0	2.1	50.0	4.2	64.0	3.3	80.0	2.6	160.0	1.3
16×/14B	0.8	12.8	17.5	6.4	35.0	8.2	27.3	10.2	22.0	20.5	10.9
	1.0	16.0	14.0	8.0	28.0	10.2	22.0	12.8	17.5	25.6	8.8
	1.25	20.0	11.2	10.0	22.4	12.8	17.5	16.0	14.0	32.0	7.0
	1.6	25.6	8.8	12.8	17.5	16.4	13.7	20.5	10.9	41.0	5.5
	2.0	32.0	7.0	16.0	14.0	20.5	10.9	25.6	8.8	51.2	4.4
	2.5	40.0	5.6	20.0	11.2	25.6	8.8	32.0	7.0	64.0	3.5
	3.2	51.2	4.4	25.6	8.8	32.8	6.8	41.0	5.5	81.9	2.7
	4.0	64.0	3.5	32.0	7.0	41.0	5.5	51.2	4.4	102.4	2.2
	5.0	80.0	2.8	40.0	5.6	51.2	4.4	64.0	3.5	128.0	1.8
	6.3	100.8	2.2	50.4	4.4	64.5	3.5	80.6	2.8	161.3	1.4
	8.0	128.0	1.8	64.0	3.5	81.9	2.7	102.4	2.2	204.8	1.1
	10.0*	160.0	1.4	80.0	2.8	102.4	2.2	128.0	1.8	256.0	0.9
25×/9.5B	0.8	20.0	11.9	10.0	23.8	12.8	18.6	16.0	14.8	32.0	7.4
	1.0	25.0	9.5	12.5	19.0	16.0	14.8	20.0	11.9	40.0	5.9
	1.25	31.3	7.6	15.6	15.2	20.0	11.9	25.0	9.5	50.0	4.8
	1.6	40.0	5.9	20.0	11.9	25.6	9.3	32.0	7.4	64.0	3.7
	2.0	50.0	4.8	25.0	9.5	32.0	7.4	40.0	5.9	80.0	3.0
	2.5	62.5	3.8	31.3	7.6	40.0	5.9	50.0	4.8	100.0	2.4
	3.2	80.0	3.0	40.0	5.9	51.2	4.6	64.0	3.7	128.0	1.9
	4.0	100.0	2.4	50.0	4.8	64.0	3.7	80.0	3.0	160.0	1.5
	5.0	125.0	1.9	62.5	3.8	80.0	3.0	100.0	2.4	200.0	1.2
	6.3	157.5	1.5	78.8	3.0	100.8	2.4	126.0	1.9	252.0	0.9
	8.0	200.0	1.2	100.0	2.4	128.0	1.9	160.0	1.5	320.0	0.7
	10.0*	250.0	1.0	125.0	1.9	160.0	1.5	200.0	1.2	400.0	0.6
40×/6B	0.8	32.0	7.5	16.0	15.0	20.5	11.7	25.6	9.4	51.2	4.7
	1.0	40.0	6.0	20.0	12.0	25.6	9.4	32.0	7.5	64.0	3.8
	1.25	50.0	4.8	25.0	9.6	32.0	7.5	40.0	6.0	80.0	3.0
	1.6	64.0	3.8	32.0	7.5	41.0	5.9	51.2	4.7	102.4	2.3
	2.0	80.0	3.0	40.0	6.0	51.2	4.7	64.0	3.8	128.0	1.9
	2.5	100.0	2.4	50.0	4.8	64.0	3.8	80.0	3.0	160.0	1.5
	3.2	128.0	1.9	64.0	3.8	81.9	2.9	102.4	2.3	204.8	1.2
	4.0	160.0	1.5	80.0	3.0	102.4	2.3	128.0	1.9	256.0	0.9
	5.0	200.0	1.2	100.0	2.4	128.0	1.9	160.0	1.5	320.0	0.8
	6.3	252.0	1.0	126.0	1.9	161.3	1.5	201.6	1.2	403.2	0.6
	8.0	320.0	0.8	160.0	1.5	204.8	1.2	256.0	0.9	512.0	0.5
	10.0*	400.0	0.6	200.0	1.2	256.0	0.9	320.0	0.8	640.0	0.4

* Position 10.0 for MZ12$_5$ only

Dimensions, Leica MS5

with incident-light stand

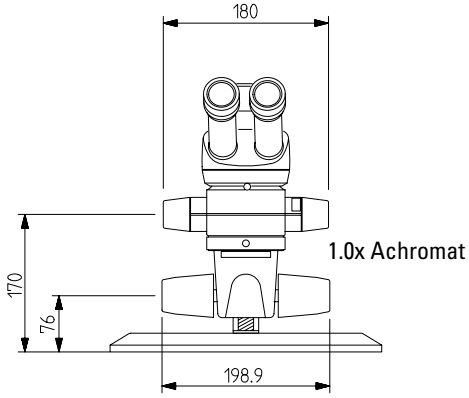

with transmitted-light stand

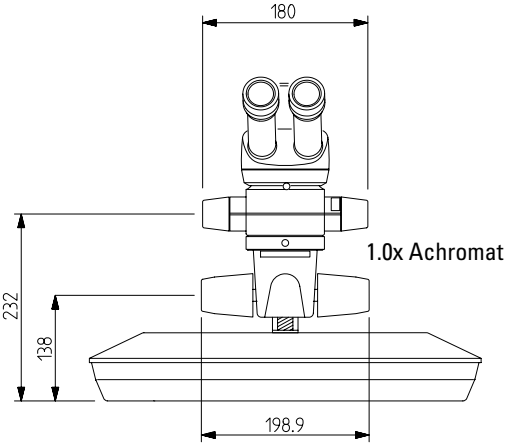

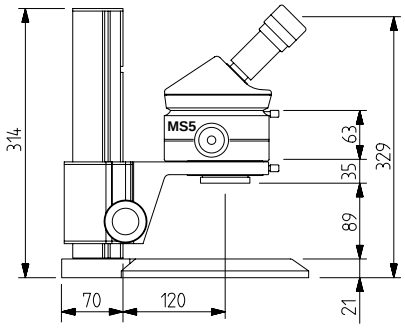

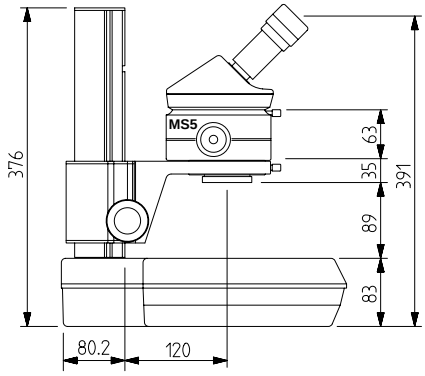

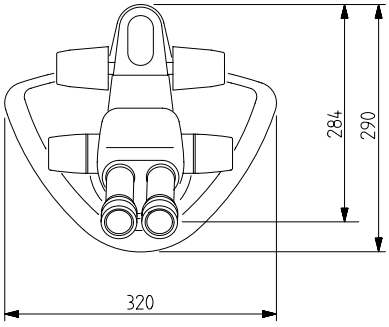

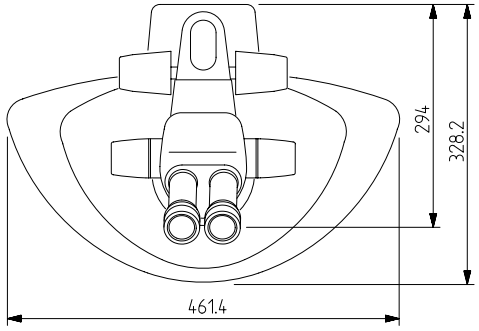

Additional dimensional diagrams involving Leica ErgoModules™ are available from your Leica agency.

Dimensions, Leica MZ6

with incident-light stand

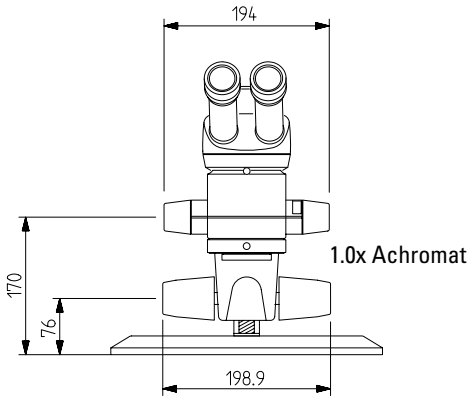

with transmitted-light stand

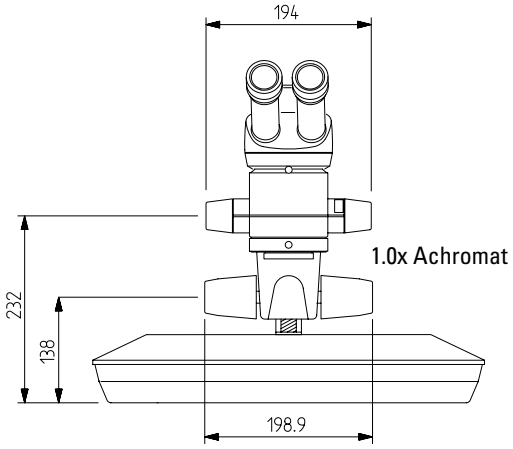

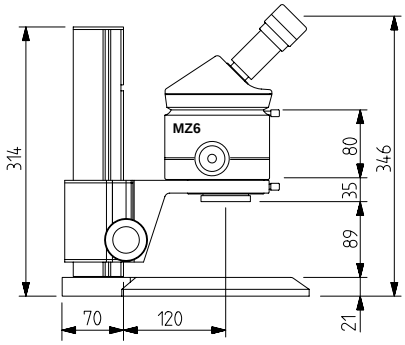

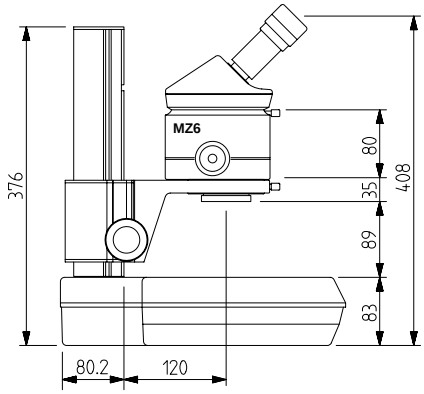

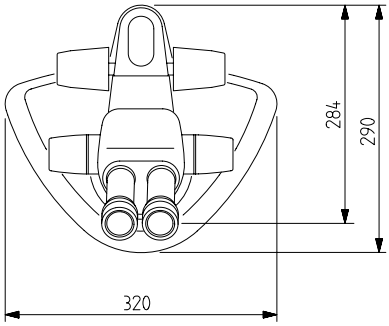

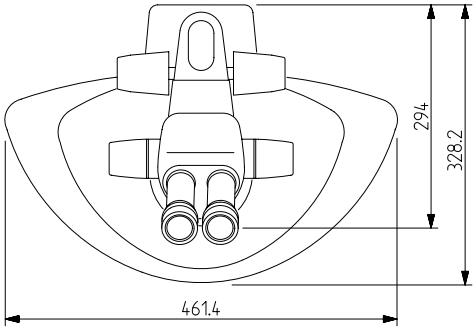

Additional dimensional diagrams involving Leica ErgoModules™ are available from your Leica agency.

Dimensions, Leica MZ7₅

with incident-light stand

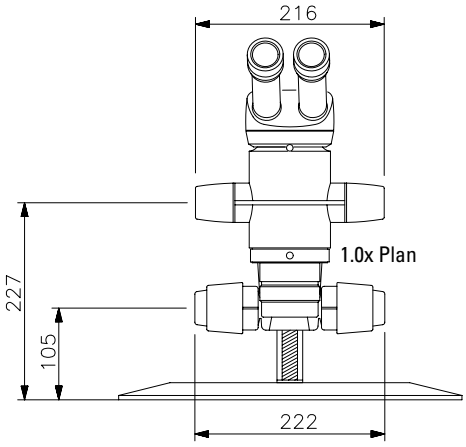

with transmitted-light stand

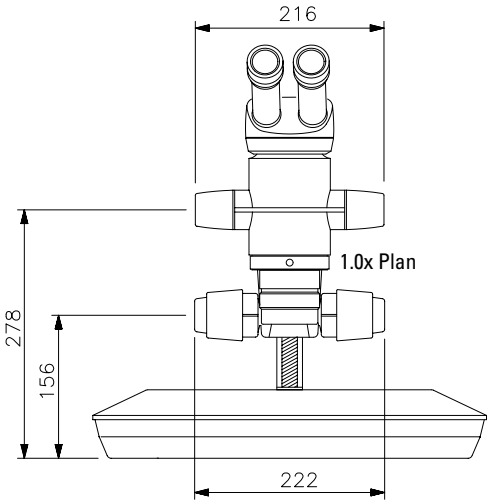

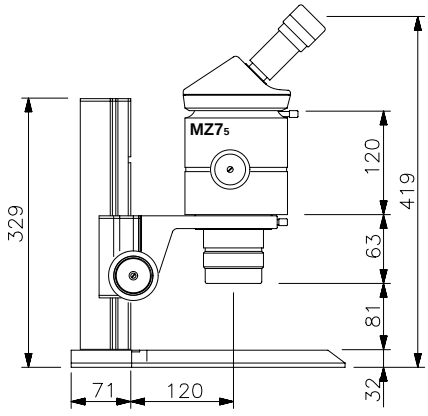

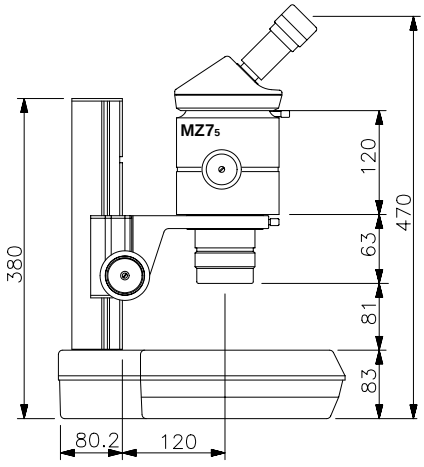

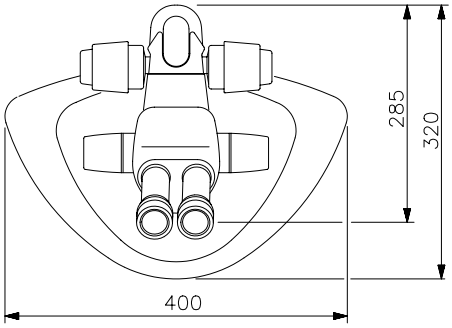

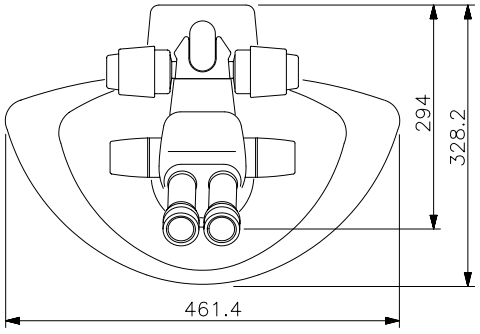

Additional dimensional diagrams involving Leica ErgoModules™ are available from your Leica agency.

Dimensions, Leica MZ9$_5$

with incident-light stand

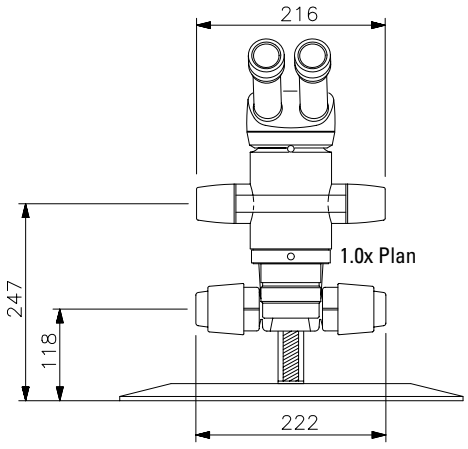

with transmitted-light stand

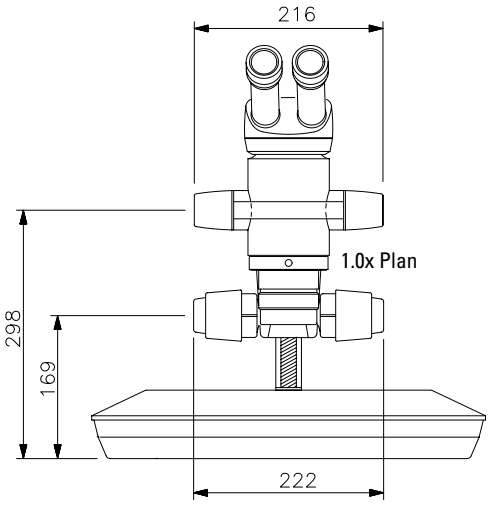

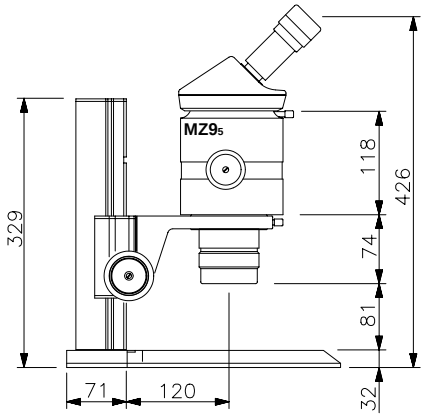

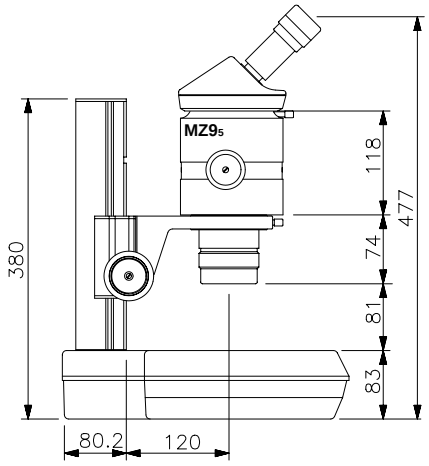

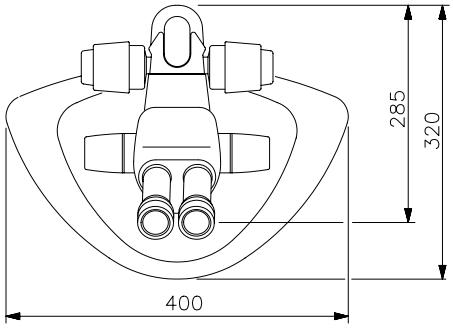

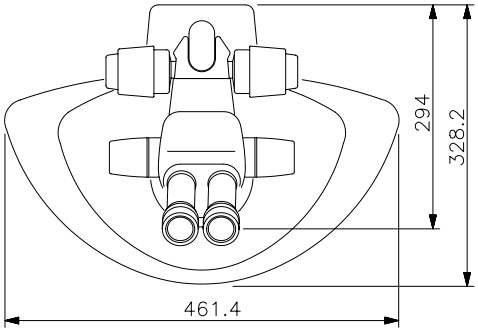

Additional dimensional diagrams involving Leica ErgoModules™ are available from your Leica agency.

Dimensions, Leica MZ12$_5$

with large incident-light stand

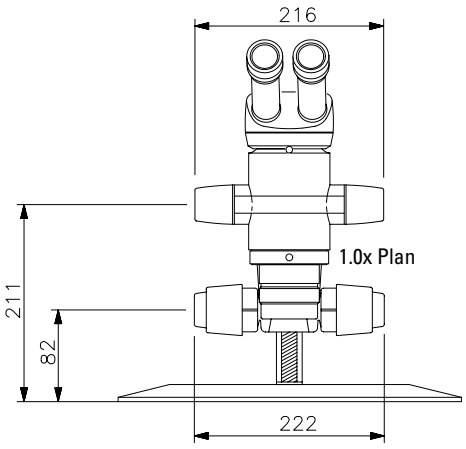

with transmitted-light stand

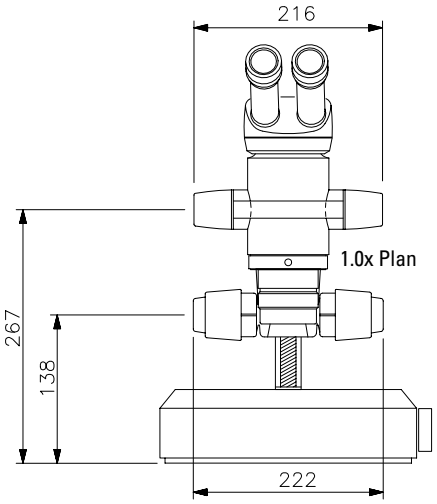

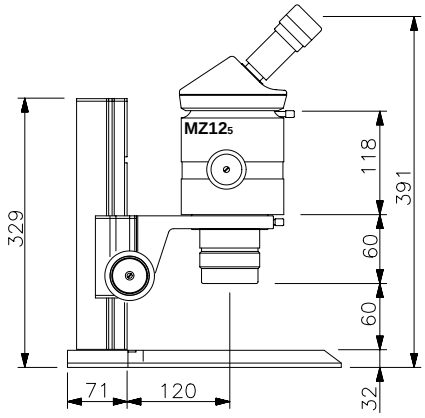

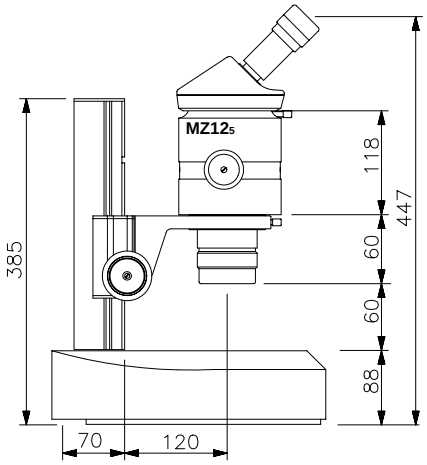

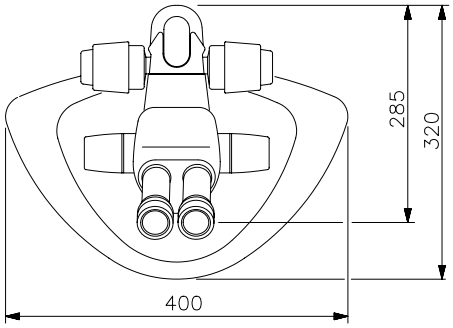

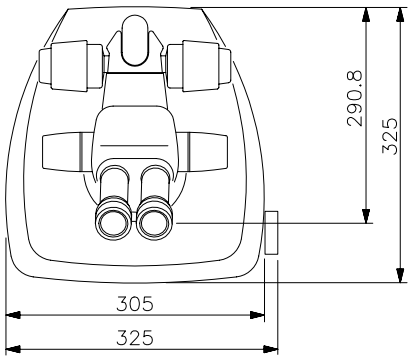

Additional dimensional diagrams involving Leica ErgoModules™ are available from your Leica agency.

Dimensions, Leica MZAPO

with incident-light stand

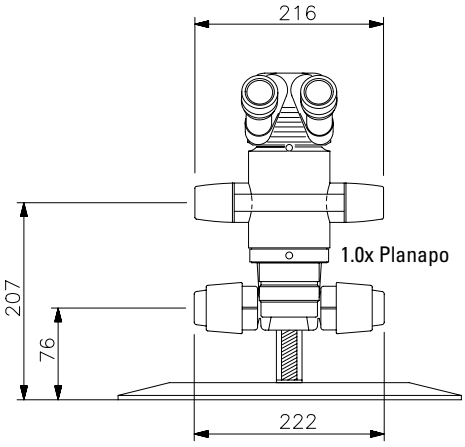

with transmitted-light stand

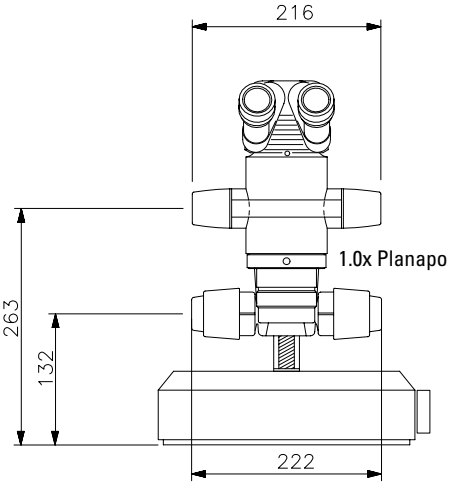

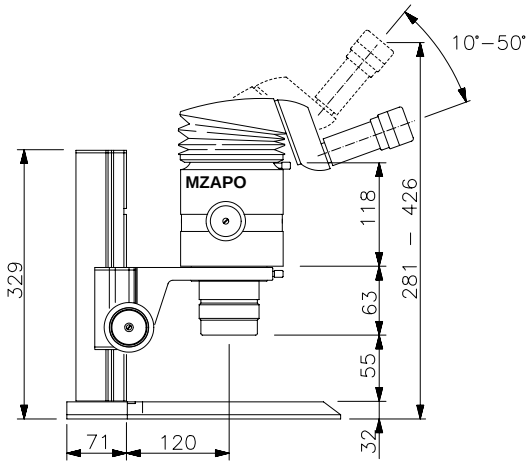

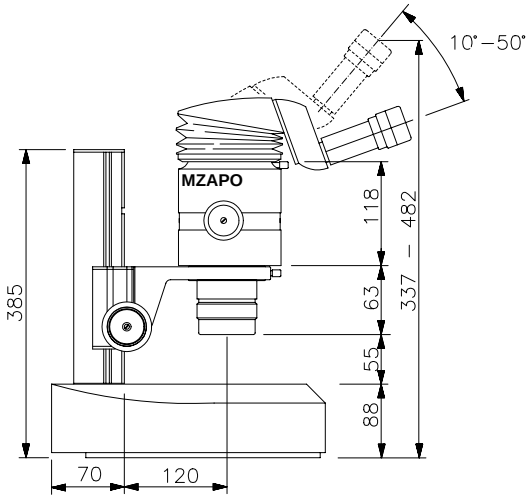

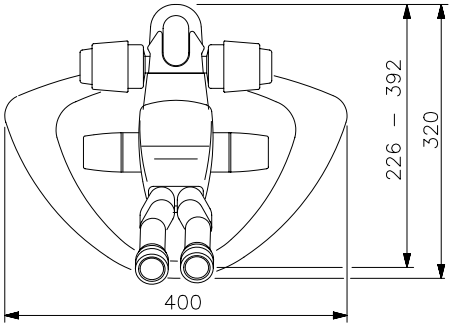

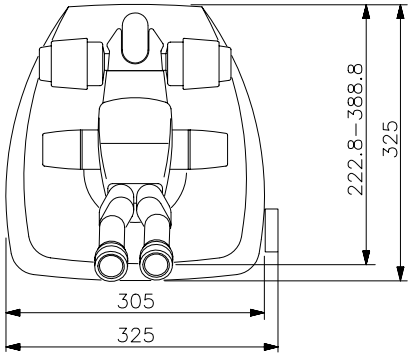

Additional dimensional diagrams involving Leica ErgoModules™ are available from your Leica agency.

Leica Microsystems – the brand for outstanding products

Leica Microsystems' Mission is to be the world's first-choice provider of innovative solutions to our customers' needs for vision, measurement, lithography and analysis of microstructures.

Leica, the leading brand for microscopes and scientific instruments, has developed from five brand names, all with a long tradition: Wild, Leitz, Reichert, Jung and Cambridge Instruments. Leica symbolizes not only tradition, but also innovation.

Leica Microsystems – an international company with a strong network of customer services

Australia:	Gladesville, NSW	Tel. +1 800 625 286	Fax +61 2 9817 8358
Austria:	Vienna	Tel. +43 1 486 80 50 0	Fax +43 1 486 80 50 30
Canada:	Richmond Hill/Ontario	Tel. +1 905 762 20 00	Fax +1 905 762 89 37
China:	Hong Kong	Tel. +8522 564 6699	Fax +8522 564 4163
Denmark:	Herlev	Tel. +45 44 5401 01	Fax +45 44 5401 11
France:	Rueil-Malmaison Cédex	Tel. +33 1 4732 8585	Fax +33 1 4732 8586
Germany:	Bensheim	Tel. +49 6251 1360	Fax +49 6251 136 155
Italy:	Milan	Tel. +39 02 57 486 1	Fax +39 02 5740 3273
Japan:	Tokyo	Tel. +81 3 543 596 09	Fax +81 3 543 596 15
Korea:	Seoul	Tel. +82 2 514 6543	Fax +82 2 514 6548
Netherlands:	Rijswijk	Tel. +31 70 41 32 130	Fax +31 70 41 32 109
Portugal:	Lisbon	Tel. +35 1 213 889 112	Fax +35 1 213 854 668
Singapore:		Tel. +65 77 97 823	Fax +65 77 30 628
Spain:	Barcelona	Tel. +34 93 494 9530	Fax +34 93 494 9532
Sweden:	Sollentuna	Tel. +46 8 625 45 45	Fax +46 8 625 45 10
Switzerland:	Glattbrugg	Tel. +41 1 809 34 34	Fax +41 1 809 34 44
United Kingdom:	Milton Keynes	Tel. +44 1908 666 663	Fax +44 1908 609 992
USA:	Bannockburn/Illinois	Tel. +1 800 248 0123	Fax +1 847 405 0164

and representatives of Leica Microsystems in more than 100 countries.

The Business Units in Leica Microsystems hold the management system certificates for the international standards ISO 9001 and ISO 14001 relating to quality management, quality assurance and environmental management.

The companies of the Leica Microsystems Group operate internationally in five business segments, where we rank with the market leaders.

Microscopy
Our expertise in microscopy is the basis for all our solutions for visualization, measurement and analysis of microstructures in life sciences and industry.

Specimen Preparation
We specialize in supplying complete solutions for histology and cytopathology.

Imaging Systems
With confocal laser technology and image analysis systems, we provide three-dimensional viewing facilities and offer new solutions for cytogenetics, pathology and material sciences.

Medical Equipment
Innovative technologies in our surgical microscopes offer new therapeutic approaches in microsurgery. With automated instruments for ophthalmology, we enable new diagnostic methods to be applied.

Semiconductor Equipment
Our automated, leading-edge measurement and inspection systems and our E-beam lithography systems make us the first choice supplier for semiconductor manufacturers all over the world.

Illustrations, descriptions and technical data are not binding and may be changed without notice.
© Leica Microsystems Ltd • CH-9435 Heerbrugg (Switzerland), 1998 • Printed on chlorine-free paper with a high content of recycled fibre.
Publication no. in: **English M2-105-0en** • German M2-105-0de • French M2-105-0fr • Spanish M2-105-0es • Printed in Switzerland – VII.2001 – RDV

Leica Microsystems Ltd
Business Unit SM
CH-9435 Heerbrugg (Switzerland)

Telephone +41 71 727 31 31
Fax +41 71 727 46 76
www.leica-microsystems.com

Leica
MICROSYSTEMS