BAUER KOMPRESSOREN

SYSTEMS SERVICE TRAINING WORLDWIDE

HIGH PRESSURE ACCESSORIES

Catalogue edition 2012 / 2013

Index

A
ACD: 166, 167
Adaptors: 46, 70
AERO-GUARD: 16
AEROTEST: 19
Air: 6, 7, 9, 12, 13, 16, 19, 20, 22, 23, 24, 27, 28, 40, 45, 50, 52, 53, 55, 65, 66, 68, 69, 77, 78, 79, 84, 85, 86, 88, 89, 90, 103, 149, 166, 170
AIR-KOOL: 18
Aluminium clamps: 100
Automatic condensate drain: 22, 167
B
Ball valves: 84
B-CONTROL: 8, 55, 56, 57, 60, 79
Booster: 162, 165
Breathing Air: 154, 155, 156, 157, 168
B-TIMER: 15
C
Capitano: 132, 136, 139, 155, 167
Capitano II: 132, 139
Centrifugal clutch: 133
CNG: 27, 86, 91, 163, 164
COMP-TRONIC: 7, 8, 55, 78
Condensate collecting system: 23
Connector: 12, 13, 19, 23, 25, 38, 39, 41, 44, 46, 47, 57, 58, 60, 64, 90, 103, 104, 106, 108, 109
Cutting ring: 90, 106
Cutting rings: 120
E
European cylinder: 41
F
Filling hose: 142
Filling panel: 53, 64
Filling valves: 31, 32, 53, 54, 56, 64
Filter cartridges: 6, 11, 13
Filter System: 168, 169
G
Gas: 6, 11, 24, 83, 85, 86, 88, 89, 103, 149, 166, 170
H
Handwheel: 31, 41
Hose connection: 55
Hoses: 102
I
Industry: 149, 158, 159, 160, 161, 162, 169
Intake pre-filter: 20
J
Junior: 133, 134, 137, 155
Junior II: 137, 155
L
lever type: 32, 44, 54, 56, 64
Lever type: 31, 32, 33, 54, 64
List of filter cartridges: 12
M
Maintenance kits: 153, 154, 155, 156, 157, 158, 159, 160, 161, 162, 163, 164, 165, 166, 167, 168, 169, 170, 171
male connector: 90, 108, 109
Mariner II: 132, 140
Membrane pressure reducers: 91
Monitoring: 15, 75
Mounting bracket: 14
O
Oceanus: 133, 141, 155
Oil: 8, 11, 148, 149, 170, 171
Operating hours counter: 15, 74, 75
P
Paintball: 13, 172
Pipes: 94
Plastic clamps: 98
Pressure conversion kits: 142
Pressure gauges: 68
Pressure monitoring: 77, 78
Pressure reducer: 19, 22, 57, 58, 59, 61, 62, 63, 88, 90
Pressure reducers: 88, 89, 90, 91
Pressure transducer: 78, 79
Pressure vessel: 24, 28
P-systems: 6, 7, 8, 9, 10, 11, 12, 13
S
Safety valve: 8, 23, 25, 26, 142
Screw caps: 121
SECURUS: 7, 8, 12, 13
SECURUS safety system: 7
Selection criteria: 56
Special tools: 146
Steel pipes: 94, 95
Switches: 10, 66, 77, 78, 144
T
T-Connectors: 117
Temperature: 16, 76, 77, 78, 79, 84, 88, 89, 90, 91, 92, 102, 103
TÜV: 8, 24, 28, 82, 83
U
Ultilus II: 138
Unimam: 46, 103, 104
Utilus: 132, 135, 138, 155, 167
V
Valves: 80
Vessels: 8, 24, 25, 26, 27, 28, 29, 30, 40, 53, 77, 82, 86
W
Wall mounting: 27, 54, 57, 60, 64, 100
Water: 11, 16, 170, 171

Table of contents

- Index ... 3
- Table of contents ... 4
- Purification systems ... 6
- SECURUS safety system ... 7
- Console mounted P-systems ... 8
- Purification systems ... 9
- Filter cartridges ... 11
- List of filter cartridges ... 12
- Paintball - Filter cartridges ... 13
- Mounting brackets ... 14
- P-Filter monitoring / B-TIMER ... 15
- CO_2 Removal / Aero-GUARD ... 16
- B-KOOL ... 18
- AEROTEST-Simultan HP ... 19
- Intake pre-filter ... 20
- Inserts for intake filters ... 21
- Automatic condensate drain unit ... 22
- Condensate collecting system ... 23
- Pressure vessels ... 24
- Rack of pressure vessels ... 25
- Combinations of cylinders ... 26
- Pressure vessel, single type ... 28
- Rack of pressure vessels B80-S ... 29
- Rack of pressure vessels B80-B ... 30
- Filling valves ... 31
- Filling valves, lever type ... 32
- Filling valve, handwheel type ... 34
- Filling valve – throttle inserts ... 36
- List of connectors and adaptors ... 38
- Safety cylinder connectors ... 39
- Filling Connections ... 40
- European cylinder connectors ... 41
- Cylinder Connector with spin valve ... 42
- Filling valve, lever type ... 44
- Non-return valves ... 45
- Adaptors ... 46
- Distribution connectors ... 47
- Filling stations ... 50
- Overview filling panels for wall mounting ... 54
- Model range ‘External Filling Panel’ ... 55
- Selection criteria ... 56
- External Filling panels with ... 57
  - direct cylinder connector ... 57
- External Filling panels with ... 60
  - hose connection ... 60
- Filling panel ... 64
- Product-advantages at one glance ... 65
- Automatic selector Device ... 66
- Pressure gauges ... 68
- Pressure gauge specifications ... 69
- Adaptors for pressure gauges ... 70
- External filling station with Airchip 2 ... 71
- Operating hours counter ... 74
- Temperature gauge ... 76
- Pressure monitoring ... 77
- Valves ... 80
- Safety valves, TÜV certified ... 82
- Overview: safety valves ... 83
- Ball valves ... 84
- Pressure maintaining valves ... 85
- Pressure reducers ... 87
- Pressure reducers air, gas ... 89
- Pressure reducers air ... 90
- Membrane pressure reducers ... 91
- Dome pressure reducer ... 92
- Pipes, clamps and hoses ... 94
- Precision stainless steel pipes ... 95
- Pipe Clamps ... 96
- Plastic clamps ... 98
- Aluminium clamps ... 100

- Hoses ... 102
- Filling hoses ... 103
- Filling hoses with Unimam connector, swivelling non-pressurized ... 104
- High pressure hoses ... 105
- Pipe fittings ... 106
- List of the most common pipe fittings ... 108
- Straight pipe fitting (GS) standard type ... 110
- Straight pipe fittings (GS) stainless steel type ... 111
- Straight male connectors (GES) ... 112
- Straight bulkhead screw connectors (GSV) 113
- Angle bulkhead screw connectors (WSV) . 114
- Angle male connectors (WEV) ... 115
- Adjustable angle screw connectors (EEWS)116
- T-Connectors (TV) ... 117
- Adjustable T-connectors (EETS) ... 118
- Adjustable L-connectors (EELS) ... 119
- Cutting rings ... 120
- Screw caps ... 121
- Straight male connectors (GEV) ... 122
- Straight male connectors (eGES) ... 123
- Reduction adaptors (ERED) ... 124
- Angle screw connectors (WV) ... 125
- Male L connectors (LEV) ... 126
- Male T connectors (TEV) ... 127
- List of flow rate ... 128
- List of flow rate for hoses ... 129
- Transportbox for Junior II ... 130
- Trolley ... 132
- Centrifugal clutch ... 133
- Conversion kits Junior ... 134
- Conversion kits Utilus ... 135
- Conversion kits Capitano ... 136
- Conversion kits Junior II ... 137
- Conversion kits Ultilus II ... 138
- Conversion kits Capitano II ... 139
- Conversion kits Mariner II ... 140
- Conversion kits Oceanus ... 141
- Pressure conversion kits ... 142
- Circuit breakers/FI protection switches ... 144
- Special tools /testing equipment ... 146
- Oil ... 148
- Oil types ... 149
- Maintenance kits: Breathing Air ... 154
- Maintenance kits: Industry ... 158
- Industry/Block-Maintenance kits ... 160
- Maintenance kits: CNG ... 163
- Maintenance kits: Booster ... 165
- Maintenance kits: ACD ... 166
- Maintenance kits: Filter System ... 168
- Maintenance kits: Oil-/ Water Separator .. 170
- Miscellaneous ... 172
- Apparel ... 176
- Give Aways ... 179
- Brochures Breathing Air ... 182
- Configuration Catalogue ... 184
- Industry | CNG ... 185
- CNG | Military / Defense ... 186
- Sports | Navigation | Oil and Gas ... 187
- Air Treatment Industry ... 188
- Image Brochures | Equipment Catalogue .. 189

Purification systems

BAUER P system: processing of air, He, Ar, N_2

The quality of the high compressed gases is unable to comply with most of the requirements due to the fact that they could be saturated up to 100% with water vapour, contain traces of the applied compressor lubricant as well as odour- and taste substances. Furthermore the processing is important to avoid corrosion, pollution, icing and formation of micro-organisms. The Bauer P-systems adsorb depending on the selected cartridge residual moisture, oil vapour, hydrocarbon based gas traces and carbon monoxide, more information refer to chapter “Filter cartridges”.
BAUER P-systems are in compliance with and even exceed the European Standard EN12021.

First the compressed medium is led through the mechanical oil and water separator in which condensed parts are separated from the air and gas stream. The 100% saturated and oil vapour containing medium flows via a non-return valve into the adsorber. In the first layer, a molecular sieve removes adsorption water vapour and partially oil vapour. The following activated carbon removes the rest of oil particles as well as odour and taste substances of the air / gas flow. Via a further molecular sieve and a particle filter the purified medium leaves the filter cartridge. A pressure maintaining / non-return valve, integrated in the pipe system of the purification system, provides a constant minimum pressure for the system and guaranteed an optimum purification.

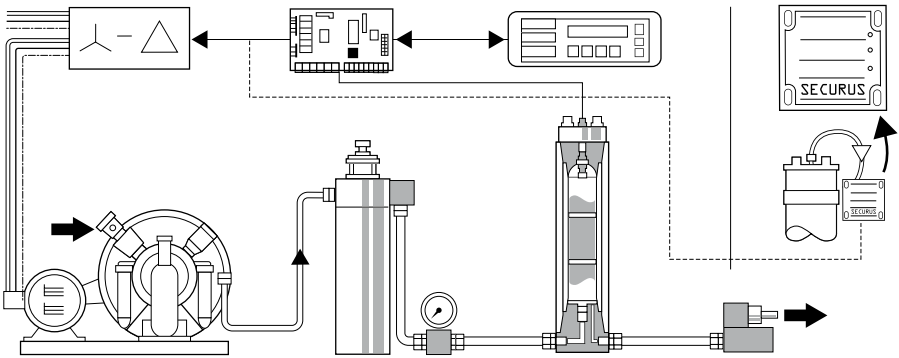

SECURUS safety system

For your safety

All BAUER P-systems can be optionally equipped with our SECURUS safety system (for P21 and P31 we recommend the B-Timer).
The SECURUS – System controls the H_2O-saturation of the filter cartridges by measuring the moisture in the molecular sieve considering the operating conditions, as for example the temperature, and finally indicates this, on the display of the BAUER-Control as a pre-alarm, due to which a new cartridge can be placed at the correct moment possible.

If the cartridge is saturated and not exchanged in time, the SECURUS automatically shuts down the compressor and indicates this optically.
SECURUS guarantees the optimum breathing air quality in compliance with EN12021 as well as the 100% usage of the filter cartridge.

The Securus System is not available for petrol and diesel driven compressors.

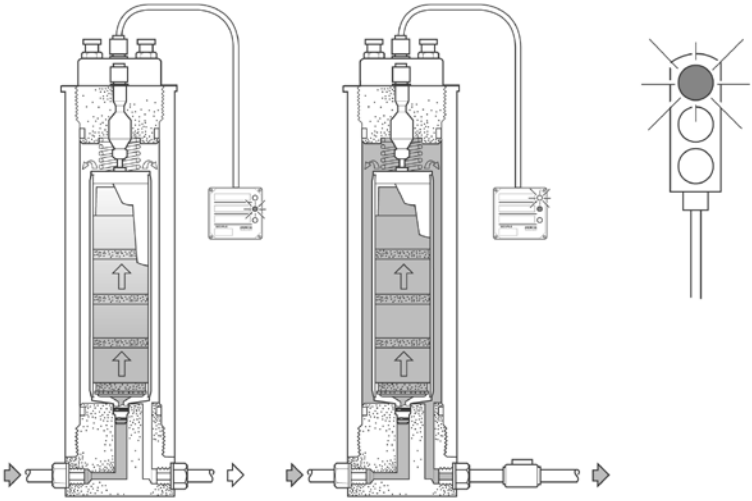

Console mounted P-systems

Console mounted P-systems, P60 - P140

Suitable for retrofitting to any existing high pressure compressor.

Delivery scope of the basic version:

- Console with all required piping
- Oil and water separator with micro-filter cartridge
- Condensate drain valve, manual
  (Optional: automatic condensate drain unit)
- Filter line with pressure vessels, made of steel and aluminium, inspection according to EU Pressure regulations.
- 1 set of filter cartridges
- Combined stainless steel pressure maintaining/non-return valve
- Venting valve
- Safety valve, certified
- Pressure gauge
- Special wrench for filter housing for filter cartridge exchange

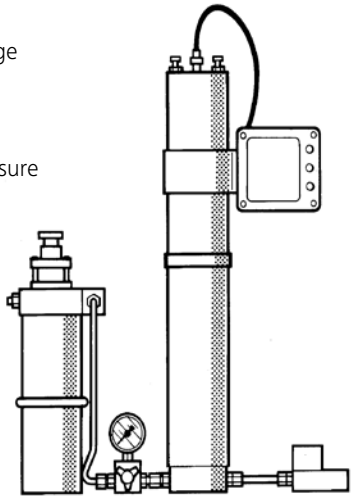

Special accessories, optional: SECURUS monitoring unit

To control the saturation level of the filter cartridge and to shut-down the compressor if a cartridge exchange is necessary.

Delivery scope:

- SECURUS-Filter housing with sensor head
- Connecting cable N21762-S01 for 5 meters – N21762-S02 for 10 meters
- SECURUS display unit - (included in COMP-TRONIC / B-CONTROL)

Purification systems

CO-processing

The purity of the air is increased by converting parts of CO into CO_2. This additional catalysis is especially recommended in case the compressor is driven by means of an internal combustion engine and/or the possible intake of CO polluted air due to ambient conditions.

With the P-systems P 21/31/41 – P 60/61 a special catalisator filter cartridge is used (refer also item replacement cartridges). In P-system P 80/81 an additional filter is installed.

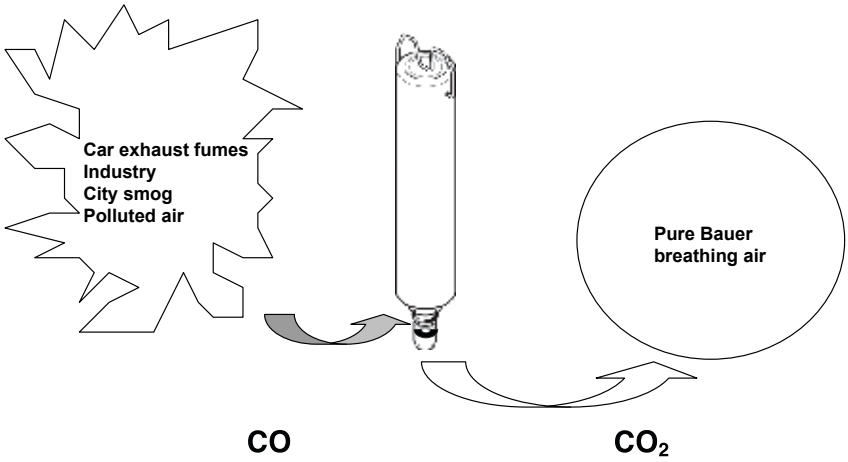

Purification systems

Pressure switches / pressure sensors

Supplied as separate unit for mounting in the outlet pipe of the P-system after the pressure retaining valve to shut down the compressor when reaching the final pressure.

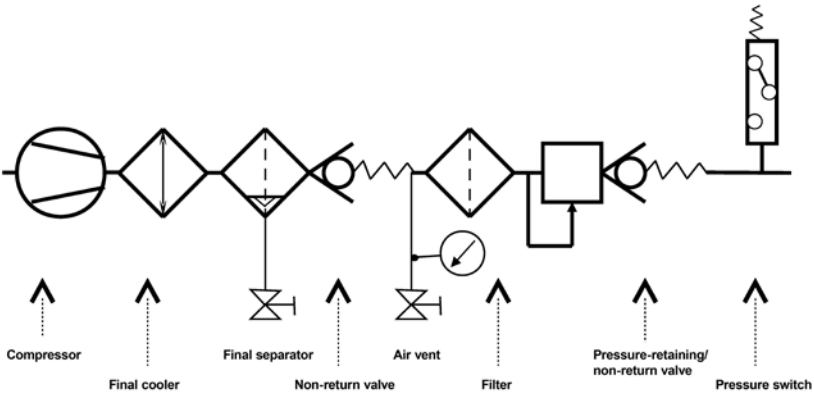

P-system construction kit for mounting at compressor unit

Separate components without mounting material an piping. P-systems with special fitting on demand.

Please, state your requirement and we will gladly advice you.

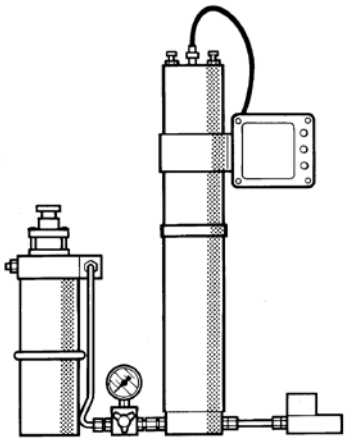

Filter cartridges

All P-systems are in compliance with and even exceed the European Standard EN12021.and the European Medicament Book.

The processing of the gas will be performed in the following order, depending on the used cartridge type:

- Coarse removal of oil and water particles: by means of the oil and water separator.
- Removal of water vapor H_2O: with molecular sieve, MS
- Removal of oil vapors and odours CxHy: with activated carbon, AC
- Conversion of carbon monoxide CO into CO_2: with Hopcalite (optional)
- Removal of coarse particles: with the filter disks in the cartridge

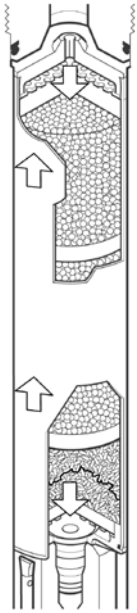

Technical Data:

- Oil/Aerosols: < 0,1 mg/m³ (EN 12021 max. 0,5 mg/m³)
- Carbon monoxide (CO): < 5 ml/m³ (EN 12021 max. 15 ppm)
- Carbon dioxide (CO_2) : < 500 ppm (V/V)
- Water vapor: < 10 mg/m³ (EN 12021 max. 25 mg/m³)
- Odour/taste: free of odour and taste

Please, find underneath the various P-systems and the related cartridges. In case of cartridges for special applications we will gladly advice you.

List of filter cartridges

P-systems	Air processing					
	DIN EN 12021	without SECURUS & CO removal DIN EN 12021	with SECURUS & CO removal DIN EN 12021	with SECURUS DIN EN 12021	without SECURUS Industrial	with SECURUS Industrial
	AC/MS drying / oil removal	AC/MS-CO breathing air / CO	AC/MS-CO-SEC breathing air / CO	AC/MS-SEC breathing air	AC/MS oil removal / drying	AC/MS-SEC oil removal / drying
P21	1x057679	059183	—	—	—	—
P31	1x 80100	80114	—	—	—	—
P40	1x062565	067224	1x061687	1x061686	—	—
P41	1x062565	067224	1x061687	1x061686	—	—
P42	1x 062565	067224	1x88109	1x87961	—	—
P60	1x058826	058827	1x060037	1x060036	1x068622	1x090984
P61	1x058826	058827	1x060037	1x060036	1x068622	1x090984
P80	1x058825 1x058826	058825 058827	1x 058825 1x060036 1x063282	1x058825 1x060036	1x058823 1x068622	1x058823 1x090984
P81	1x058825 1x058826	058825 058827	1x 058825 1x060036 1x063282	1x058825 1x060036	1x058823 1x068622	1x058823 1x090984
P 100	2x 058825 1x058826	—	2x058825 1x060036 1x063282	2x058825 1x060036	2x058823 1x068622	2x058823 1x090984
P 101	2x 058825 1x058826	—	2x058825 1x060036 1x063283	1x058825 1x060036	2x058823 1x068622	2x058823 1x090984
P 120	1x067099 1x067867	—	1x067099 1x067097 1x065562	1x067099 1x067097	1x067812 1x067867	1x067812 1x068067
P 140	2x067099 1x067867	—	2x067099 1x067097 1x065562	2x067099 1x067097	2x067812 1x067867	2x067812 1x067097
AC.activated carbon | MS.molecular sieve | CO.carbon monoxide | SEC.Securus-connector						

Paintball - Filter cartridges

P-systems	Air processing					
	DIN EN 12021	without SECURUS & CO removal DIN EN 12021	with SECURUS & CO removal DIN EN 12021	with SECURUS DIN EN 12021	Industrial	with SECURUS Industrial
	AC/MS drying / oil removal	AC/MS-CO breathing air / CO	AC/MS-CO-SEC breathing air / CO	AC/MS-SEC breathing air	AC/MS oil removal / drying	AC/MS-SEC oil removal / drying
P 21	—	—	—	—	82546	—
P 31	—	—	—	—	82545	—
AC.activated carbon | MS.molecular sieve | CO.carbon monoxide | SEC.Securus-connector						

Mounting brackets

Mounting brackets for fastening separator and filter housings:

Mounting bracket

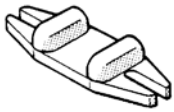

c

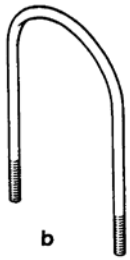

b

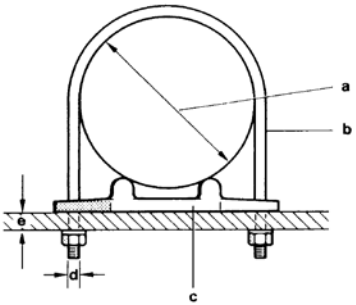

Mounting brackets - diameter

Inner dia.	Thread dia.	Wall thickness	Clamp	Bracket for this filter support
(a)	(d)	(e)	(b)	(c)
mm	mm	mm	Part no.	Part no.
76	M8	1 - 8	**14584**	**12917-M**
80	M8	1 – 8	**14946**	**12917-M**
97	M8	1 – 20	**61544**	**63599-M**
110	M8	1 - 5	**68817**	**63599-M**
117	M8	1 - 5	**65831**	**63599-M**

P-Filter monitoring / B-TIMER

The exchange of filter cartridge with the B-Timer is safe, easy and economical.

This mini-computer counts the operating hours and reliably shows the remaining life time of the cartridge. Necessary cartridge exchanges or maintenance intervals are clearly indicated.

The B-Timer can be mounted or retrofitted to any portable BAUER compressor .
Easiest installation – a screwdriver is enough.

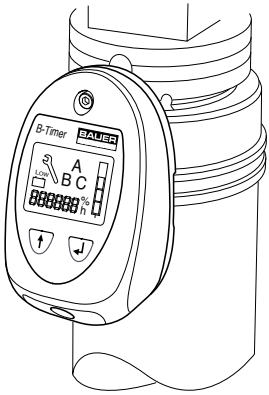

Technical Data:

- **Monitoring:** P21, P31, P41 for 200 bar and 300 bar on Profiline / HE and TE models
- **Operating period:** 3 years with 500 operating hours/year
- **Operating hours counter:** integrated
- **Display:** maintenance intervals, maintenance kits, saturation level of the cartridges, cartridge number, starts and stops automatically
- **Properties:** dust and splash water protected, resistant against sun rays, high humidity and sand

Designation	Part no.
B-Timer	**N27286**
Replacement battery	**82743**
Mounting clamp P 21 / P 41	**N15550**
Mounting clamp P 31	**N26348**

CO_2 Removal / Aero-GUARD

For reduction of the CO_2-content in compressed breathing air. In our environment, the CO_2 content is constantly increasing. Bauer Kompressoren offers you a very efficient method of cleaning the air from CO_2.

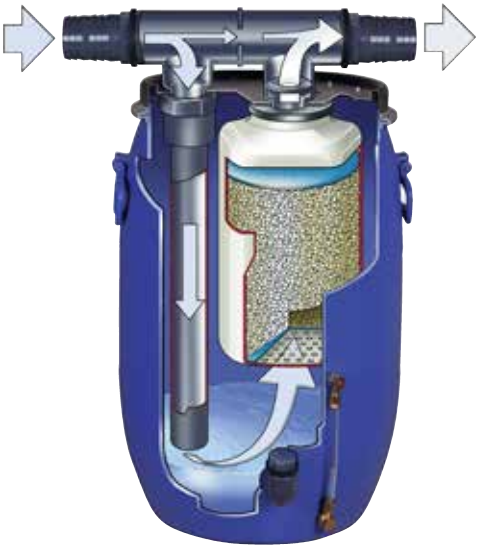

Through a sophisticated by-pass system the air taken in by the compressor is guided through the AERO-GUARD unit. Approx. two third parts of the air flow through the filter cartridge, which adsorbs the CO_2.
So the CO_2 content is reduced to a third of the value of the intake air – exceeding the very strict limits of the EN 12021. At the same time the AERO-GUARD reaches an long filter lifetime.

Technical Data:

- **Supply volume:** 100 - 680 l/min / Duo up to 1.000 l/m
- **Lifetime:** min. 50 h (at 600 l/min and 1000 ppm-vol
- **Intake** CO_2 concentration, with low supply volume accordingly longer)
- **Outlet concentration:** 1/3 of the intake concentration max. 330 ppm-vol. CO_2
- **Rel. humidity:** 0 to 100% of the intake air
- **Temperature range:** +5 to +45°C
- **Filter element:** exchange without any tool
- **Dimensions:** LxBxH: 50 x 46 x 72
- **Operational weight:** 26 kg

The Aero-Guard system consists of the following components:

- Intake pipe (adequate connection hoses have to be ordered separately; Refer to “Accessories”)
- Water tank, 60 l
- Filter cartridge, filled with 9 kg of special carbon dioxide absorbent material

Designation/size	Suitable for delivery quantities	Dimensions (B x T x H)	Operating weight
	l / min.*	cm	Ltrs./bar
Aero-Guard-S	100 – 150	50 x 46 x 72	26 kg incl. filter cartridge and filled with 10 l of water
Aero-Guard-M	160 – 230		
Aero-Guard-L	240 – 320		
Aero-Guard-XL	330 – 450		
Aero-Guard-XXL	460 – 680		

Accessories	Inner diameter of hose ND/ND	Application field	Part no.
Intake hoses, inlet side			
Intake hose, complete	60 / 60		**79377**
Intake section with sleeve1)	100 / 60		**79423**
Intake hose to intake section 79423[1)]			**N25150**
Intake hoses, outlet side			
Intake hose, complete	60 / 40	Open systems	**83336**
Intake hose, complete	60 / 60	IK100II - IK120II,	**79377**
Intake hose, complete	60 / 40	IK12.14II	**83337**
Intake hose, complete	60 / 60	Open systems	**79378**
Intake hoses, outlet side, for older models of compressor			
Intake hose, complete	60 / 32	Open systems K100-K120 (with intake filter 013758); manufactured before July 2004, K15 (with intake filter 056372)	**79376**
Intake hose, complete	60 / 25	K100-K120 (with intake filter 013758); manufactured before July 2004	**79422**
Spare filter cartridge			
Filter cartridge incl. 10 water disinfection tablets each for 10 l of water			**79050**

* Supply volume of the connected compressor, measured with cylinder filling of 0-200 bar ± 5%.
[1)] Order hose ND 100 separately; length upon request, however max. 20m; Order No. N25150

B-KOOL

A long filter durability and capacity is important for a competitive business of professional diving stations. The temperature has a high influence on the compressed medium.

Our B-Kool extends the durability of your cartridges up to 11 times! It is equipped with an integrated separator as well as an automatic condensate drain and removes the major part of the moisture before it reaches your filter system.

Technical Data:

- **Medium:** Air
- **Operating temperature:** + 5 - + 45 °C
- **Intake temperature:** max. + 60 °C
- **Maximum operating pressure:** 350/500 bar
- **Minimum operating pressure:** 100 bar
- **F.A.D. range:**[2]: 200 - 700 l/min
- **Power consumption:** max. 550 W at 50 Hz

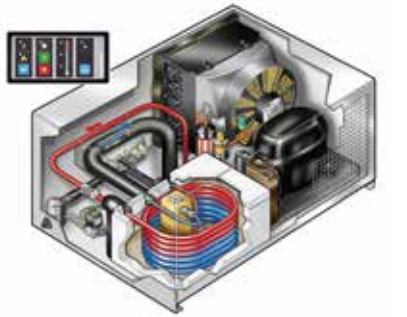

Options	PROFI-LINE	MV III	KAP	PE TE/HE	PE VE/ OFFEN	VERTICUS 5	PE VE/SILENT
Model	B-KOOL 680s[1]					B-KOOL 680i[2]/B-KOOL 680s[1]	
P41-purification system	●	●	●			●	
P42-purification system				O[3]	O		O
P61-purification system		●	●		●	●	●
P81-purification system			●			●	

● Ex factory or retrofil | O Only ex factory, no retrofit possible

Max. working pressure PN-max	Voltage range	Frequency	Part no.
B-Kool 680 Application V5,PE,VE | Weight 50 kg | Dimensions 75x35x53 cm (BxHxT)			
350 bar	200-240 VAC	50/60 Hz	**125521-F01**
500 bar	200-240 VAC	50/60 Hz	**128317-F01**
350 bar	100-127 VAC	50/60 Hz	**128318-F01**
500 bar	100-127 VAC	50/60 Hz	**128319-F01**
B-Kool 680s Application Profi Line, PE HE, PE Ve, MV, V5 | Weight 48 kg | Dimensions 38,5x70,53,5 cm (BxHxT)			
350 bar	200-240 VAC	50/60 Hz	**126864-F01**
500 bar	200-240 VAC	50/60 Hz	**128324-F01**
350 bar	100-127 VAC	50/60 Hz	**128325-F01**
500 bar	100-127 VAC	50/60 Hz	**128326-F01**

1) no retrofit possible on the PE ranges with P42 purification system | 2) integrated into the unit on sale 3) only on PE 250 HE and PE 300 TE/HE

AEROTEST-Simultan HP

Negative environmental influence and enhanced standards for breathing air quality like the DIN/EN12021 put ever increasing demands on the operators of filling stations. With the portable AEROTEST Simultan HP you are always on the right way.

By means of the inserted test tubes and „Impaktor", the compliance of the concentration limits of CO_2, CO, water vapour and the oil vapour are reliable measured at the same time. The test set is designed to make faulty measurements by incorrect handling almost impossible: before the test cycle calibration is necessary. The pressure reducer and special nozzles provide a constant flow and guarantee an optimum measurement accuracy.

Technical Data:

- **Previous pressure:** 200 / 300 bar
- **Test cycle:** 5 min
- **Weight:** approx. 3 kg
- **Connection:** G 5/8''
- **Flow:** 0,2 l/min and 4,0 l/min
- **Dimensions:** WxHxD 30x36x8 cm (Dimensions of the portable case)

Designation	Part no.
Aero-Test-HP Impaktor complete with case	N31565
Aero-Test-LP Alpha complete with case	N25537
Replacement test tubes Simultan kit oil (not available for synthetic oil)	N15521
Mounting bracket Impaktor	N31184
Test unit for Impaktor (10pce.) (available for all types of oil)	N31173
Replacement test tubes Simultan kit CO2	N15522
Replacement test tubes Simultan kit CO	N15523
Replacement test tubes Simultan H2O	N25535
Test tubes opener	N25813
Pressure reducer with international filling adaptor	N25815
Diving nipple	65299-635
Low pressure connector	65297-636

Intake pre-filter

Intake prefilters are used to protect the unit from big particles like leaves, paper, and other foreign particles, and to locate the intake where the air is cleaner (especially important for breathing air).

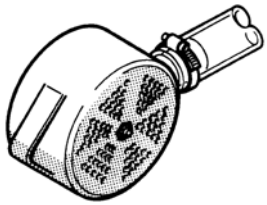

Technical Data:

- **Filter screen of the pre-filter:** 3 mm
- **Flow rate:** up to 600 l/min

For compressor models: UTILUS , CAPITANO, MARINER, KA P14, K100, K120, K12.14 up to manufacturing year 2004

Designation	Part no.
Intake pre-filter complete with hose and clamp	014539-KD
Delivery scope:	
Pre-filter	057691
Intake hose 3m length, inner diameter 25 mm	N1005
Hose clamp	N2011

For compressor models: KAP 15, K150, K180

Designation	Part no.
Intake pre-filter complete with hose and clamp	014663
Delivery scope:	
Pre-filter	057692
Intake hose 3m length, inner diameter 30 mm	N3034
Hose clamp	N2011

For compressor models: UTILUS -II, CAPITANO-II, MARINER-II, K100-II, K120-II, K12.14, KA P15, K150, K180 (starting 03/2004)

Designation	Part no.
Intake pre-filter complete with hose and clamp	82946
Delivery scope:	
Pre-filter	057691
Intake hose 3m length, inner diameter 40 mm	N27481
Hose clamp	N27540
Reducer (for K150/K180, only)	82814

INSERTS FOR INTAKE FILTERS

- **Function:** cleaning of operating medium
- **Dimensions:** diameter: 67 mm to 124 mm, length: 71 to 320 mm
- **Quantity of change:** according to installation at site

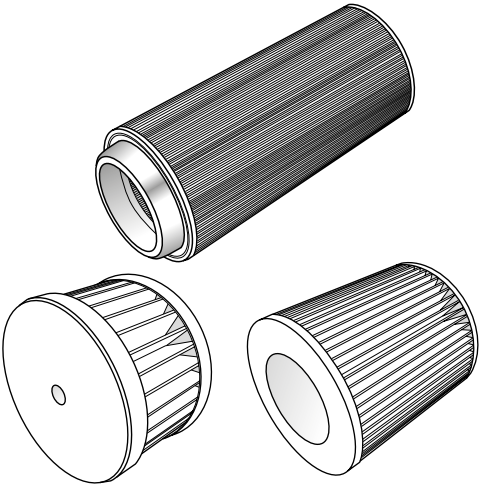

Designation	Part no.
Small units (Junior, Oceanus, S30)	**N4823**
IK100 – IK12.14 up to 6.2004	**N70**
IK100 – IK12.14 from 6.2004	**N25950**
IK150- IK22.0 up to 2001	**N3029**
K23.0 up to 2009	**N18906**
IK150- IK18.1 from 2001 IK150- IK23 up to 2001	**N25886**
Big blocks / medium pressure (K28.3, 21.0, 25.0, 23.1, 25.4, K28.0, K28.2)	**N7698**
Large units starting from 2008 (K23.0, K24.4)	**N29569**

Automatic condensate drain unit

Whether for air, He, Ar, N_2 - also your compressor needs regular condensate draining.

Consisting of:

- Condensate drain valve with solenoid valve and coil
- Timer, mounted in a box or compressor control
- Pressure reducer for control air supply
- Cycle counter to record the number of drain cycles

If required please contact us and specify your compressor model and the operating conditions and we will advise and quote accordingly.

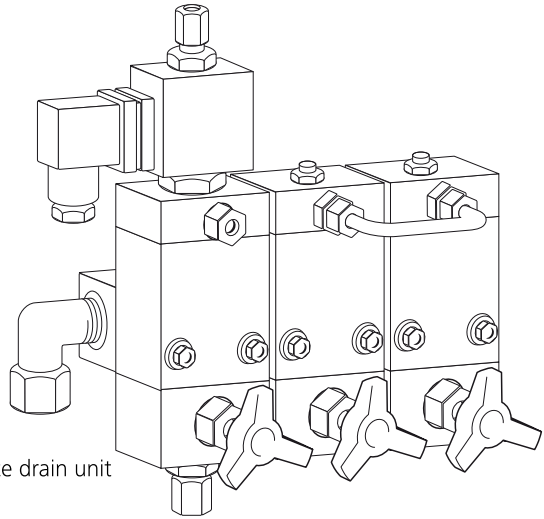

Automatic condensate drain unit

In crash-frame	purifying system P21	purifying system P31	purifying system P41
Capitano 140 E	122400	122638	
Mariner 320 E		122500	122500
Mariner 200 E	122682	122683	122683
Mariner 250 E	122681	122675	122673
Mariner 320 B*		123054	123054

* For units with gasoline engine including electric generator only!

› Condensate collecting system

The condensate collecting system functions as a central collector of the accumulated condensate and separates the condensate from the air.
The condensate collecting tank is equipped with a level indicator for optical pre-warning in case emptying is required. Additionally, in case of a full tank, the compressor can be automatically shut down off by a max. level contact or an alarm system at provided by the customer can be activated.

The separated air is guided through activated carbon so that only clean and odourless air is exhausted, in accordance with TRG regulations.

The condensate tank is fitted to the condensate outlet connector through a hose.

Actualisation kit:

› for additional installation on your KAP or VERTICUS unit

Model/ Compres-sorrange	Tank capacity	Con-densate capacity	Aktivated charcoal contents	Tube con-nector on the hose	Inlet fitting	Connec-ting hose	Dimensi-ons (B x T x H)	Part no.
	ltrs.	ltrs.	Grammes	Ø mm		Ø mm	mm	
Verticus KAP to K180	approx. 60	approx. 40	3700 g	15	G ½	1150	410 x 330 x 1000	**072787**
K22 to K28	approx. 60	approx. 40	3700 g	28	G1	1500	410 x 330 x 1000	**072788**

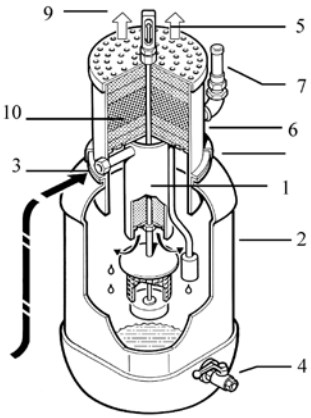

1 Condensate separator
2 Plastic collecting tank, 60 l
3 Condensate inlet G 3/4 or G1
4 Condensate drain tap G1/2
5 Mechanical level indicator
6 Filter housing
7 Safety valve
8 Clamping ring
9 Clean and odourless air outlet
10 Activated carbon filling

Pressure vessels

The storage cylinders help to store compressed air or gas. With the module construction almost any storage capacity is possible. The installation takes place according to German regulations, installation according to other regulations on request. Vessels are also available with different volume. Please order the storage modules, cylinder console and and connection piping always single on demand.

Pressure vessel, single module
Technical Data:

- **Volume:** 50 ltrs.
- **Medium:** compressed air, dry; nitrogen and inert gas.
- The standard modules are not helium-tight
- **Operating temperature:** + 5°C to + 50°C
- **Pressure vessel only:** - 50° to + 65°C
- **Cycle no. Acc. to AD-S1:** 300 to 360 bar: unlimited*
- **250 to 360 bar:** 245.000 cycles*
- **200 to 360 bar:** 50.000 cycles*
- **Material:** 34CrMo4
- **Surface:** inside raw; outside painted

Delivery scope:

- Cylinder without connections and accessories.

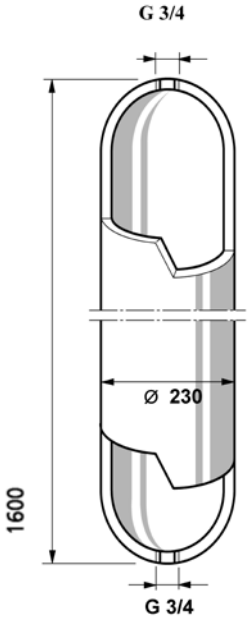

Nominal pressure	Volume	Weight	Storage volume	Cylinder max Test pressure	Connec-tions	Part no.
bar	ltrs.	kg	ltrs./bar	bar		
360	50	approx. 100	18.000 / 360	540	G ¾	N4975
Optional						
Reducer G3/4 x G3/8						63484
O ring						N18616

* calculated acc. to TRB and AD instructions with TÜV certification according to pressure vessels regulation.

Rack of pressure vessels

Technical Data:

- **Volume:** 50 ltrs. vertical arrangement with console
- **Nominal pressure:** max. 360 bar
- **Safety valve:** 360 bar
- **Pipe connector inlet/outlet**: profile ring pipe fitting DIN2353;
  10S for pipe outer diameter 10mm; alternatively 8S for pipe outer diameter 8mm

Delivery scope:

The individual modules are delivered separately and assembled on site. All necessary fittings are included in the delivery scope, including console, pressure gauge, safety valve and condensate drain taps.

The pressure vessels meet the European regulations for stationary installation.

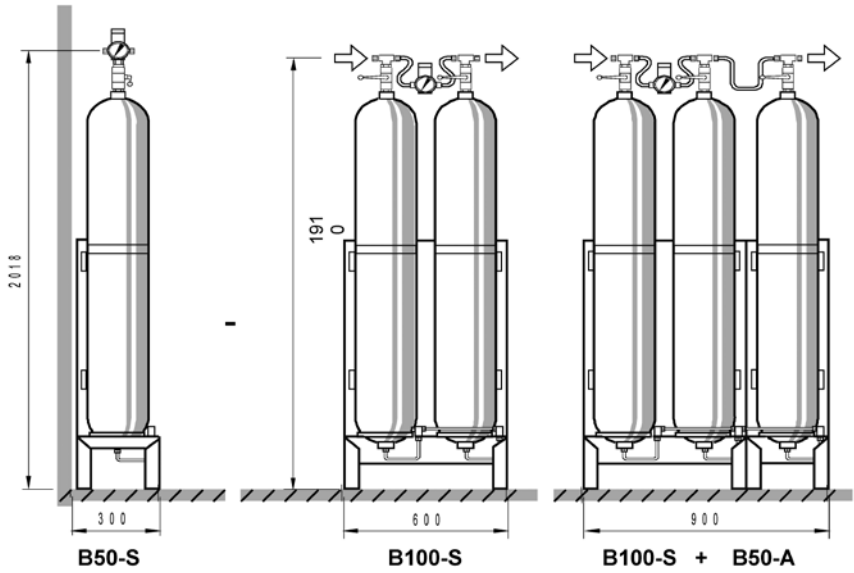

Tests according to the current operating safety regulations:

Every 5 years visual inspection Every 10 years water pressure test

Combinations of cylinders

Rack of pressure vessels 330 bar

Storage system	Pressure	Part no.
B80S with console	330 bar	**B 80**
B80B without console	330 bar	**B 80**
Accessories		
Connecting tube for B80S with console		**076387**
Connecting tube for B80S without console		**076363**
Safety valve		**059410**
Wall mounted		**076355**
B 160S standard module		**B 160**
B 160A extension module		**B 160**

Rack of pressure vessels 360 bar

Storage system	Volume	Storage volume	Weight	Part no.
	Ltrs.	Ltrs.	kg / approx.:	
B 50 S	50	17.500	120	**B 50**
B 50 A	50	17.500	120	**B 50**
B 100 S	100	35.000	225	**B 100**
B 100 A	100	35.000	225	**B 100**

Rack of pressure vessels 420 bar

Storage system	Pressure	Part no.
B50 S standard module	420 bar	**B 50**
B 50 A extension module	420 bar	**B 50**
B 100 S standard module	420 bar	**B 100**
B 100 A extension module	420 bar	**B 100**

Rack of pressure vessels 500 bar

Storage system	Pressure	Part no.
B50/500 S standard module	500 bar	**B 50**
B 50/500 A extension module	500 bar	**B 50**
B 100/500 S standard module	500 bar	**B 100**
B 100/500 A extension module	500 bar	**B 100**

Rack of pressure vessels CNG 330 bar

Storage system	Number of cylinders	Total geometric volume	Pmax.	Version		
			bar	1-bank	2-bank	3-bank
B800	10	800	330	X	X	X
B960	12	960	330	X	X	X
B1920	24	1920	330	X	X	X
B2000	25	2000	330	X	X	X
B2400	30	2400	330	X	X	X

B 80 S, with console

Storage cylinder, upright, mounted on console; connection at the bottom, with condensate drain valve and air outlet valve; a 076387 connecting hose is required for each additional storage cylinder when attaching more than one storage cylinder.
Option: installed safety valve (max. 330 bar set value), at the bottom on the console.

B 80 B, without console

Storage cylinder, with cylinder valve, without condensate valve.
Option: clamp for wall mounting.
A 076363 connecting hose is required for each additional storage cylinder when attaching more than one storage cylinder.

B 160 S – standard module

Storage cylinder, upright, mounted on console; connection at the bottom, with condensate drain valve, air outlet valve and safety valve.

B 160 A – extension module

To extend the above standard module to any size for greater volumes. Scope of delivery as for the standard module, but without safety valve; a connecting hose is necessary for this.

B 50 S / B 100 S – standard module

Storage cylinder(s), upright, mounted on console; connection at the top, with pressure gauge,
shut-off valve, air outlet valve and safety valve.

B 50 A / B 100 A – extension module

To extend the above standard module to any size for greater volumes. Scope of delivery as for the standard module, but without pressure gauge and without safety valve.

Pressure vessel, single type

Technical Data:

- **Volume:** 80 Ltrs.
- **Medium:** compressed air, dry; nitrogen and inert gases
- **Operating temperature:** -20°C to + 50°C
- **Surface:** inside raw, outside primed
- **Load cycles acc. to AD-S1:** at 70 to 250 bar = 74,300 cycles*
- **Material:** 34 Cr Mo 4 pipe outer diameter 8 mm

Delivery scope:

- Cylinder without connectors and accessories

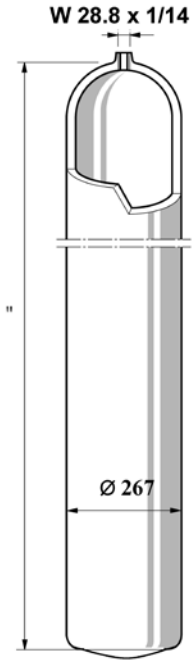

Nominal pressure	Volume	Weight	Storage volume	Test pressure	Connections	Part no.
bar	Ltrs.	kg	Ltrs./bar	bar	acc. to DIN 477	
330	80	approx. 116	24.000 / 300	450	W28,8x1/14	077599

* calculated acc. to TRB and AD instructions with TÜV certification according to pressure vessels regulation.

Rack of pressure vessels B80-S

The modules are designed for operation without safety valve and pressure gauge. The rack of pressure vessels is delivered with console and condensate drain and has to be secured via the system.

The pressure vessels meet the European regulations for stationary installation.

Technical Data:

- **Volume:** 80 Ltrs. vertical with console and connection at the bottom, condensate drain tap and outlet valve
- **Pressure:** 330 bar
- **Pipe connection:** for pipes with ø 8 mm

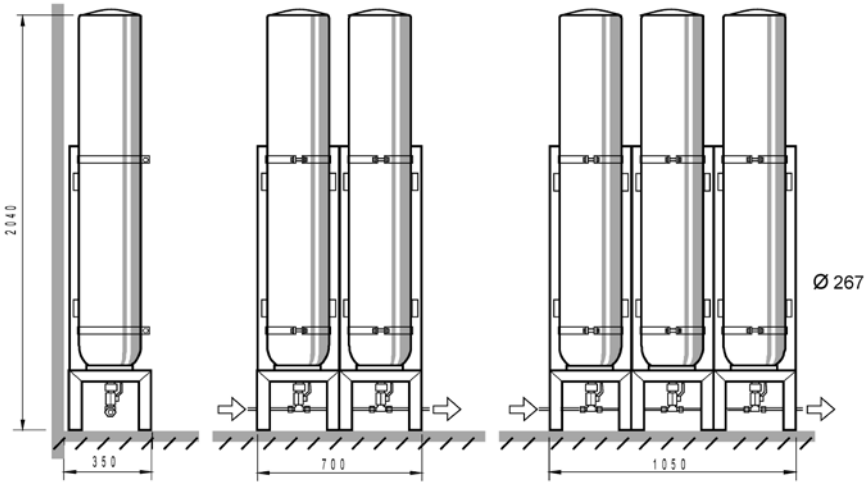

1x B 80-S 2x B 80-S 3x B 80-S

Volume	Nominal pressure	Weight	Storage volume	Part no.
Ltrs.	bar	kg	Ltrs./bar	
80	330	approx. 145	24.000 / 300	**076053**
Optional				
Connecting hose				**076387**

Rack of pressure vessels B80-B

The modules are designed for operation without safety valve, pressure gauge, console and condensate drain.
The pressure vessels meet the European regulations for stationary installation.

Technical Data:

- **Volume:** 80 ltrs. vertical module with connection on the top, without console and without condensate drain
- **Pressure:** 330 bar
- **Tube connection:** for pipes with ø 8 mm

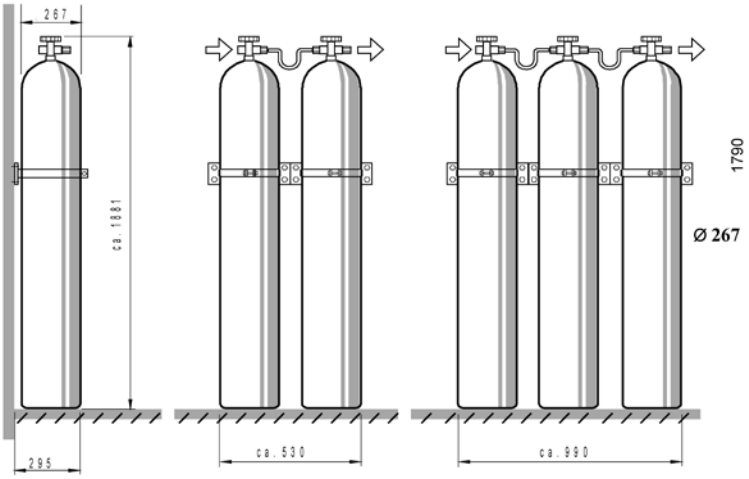

1x B80-B 2x B80-B 3x B80-B

Volume	Nominal pressure	Weight	Storage volume	Part no.
Ltrs.	bar	kg	Ltrs./bar	
80	330	approx. 125	24.000 / 300	**076356**
Optional				
Wall mounting kit				**076355**
Connecting hose				**076363**

Filling valves

A filling valve with integrated non-return valve avoids the flowing back of the remaining gas of the compressed air cylinder to other connected cylinders. This is especially an advantage for the exactly calculated Nitrox mixture.

Filling connector with single venting function

- Opening and venting of the valve with a handwheel
- All filling valves with built-in venting
- Valve seat protected against damages caused by too strong tightening
- Recommended for occasional filling
- Especialy suitable for mobile use
- Corrosion resistant
- Lever clearly OPEN or CLOSED

- Safety filling connection for version with cylinder connection
- Lever valve with a unique unsuperseeded quality, reliability and operating comfort
- Recommended for frequent filling because of a high operating comfort
- Especially suitable for stationary use
- Corrosion resistant

- A filling valve with integrated non-return valve avoids the flowing back of the remaining gas of the compressed air cylinder to other connected cylinders. This is especially an advantage for the exactly calculated Nitrox mixture.
- When removing the valve after the filling, it is automatically vented by turning the valve and a safe removing of the filling valve from the cylinder is possible.
- The development was focused on this model's ergonomic advantages

Handwheel type

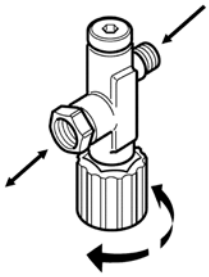

Lever type

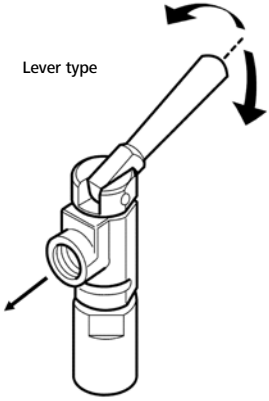

Rotating Layout

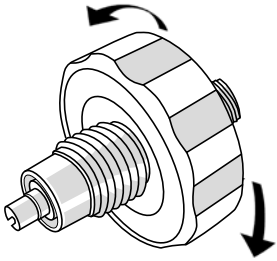

Filling valves, lever type

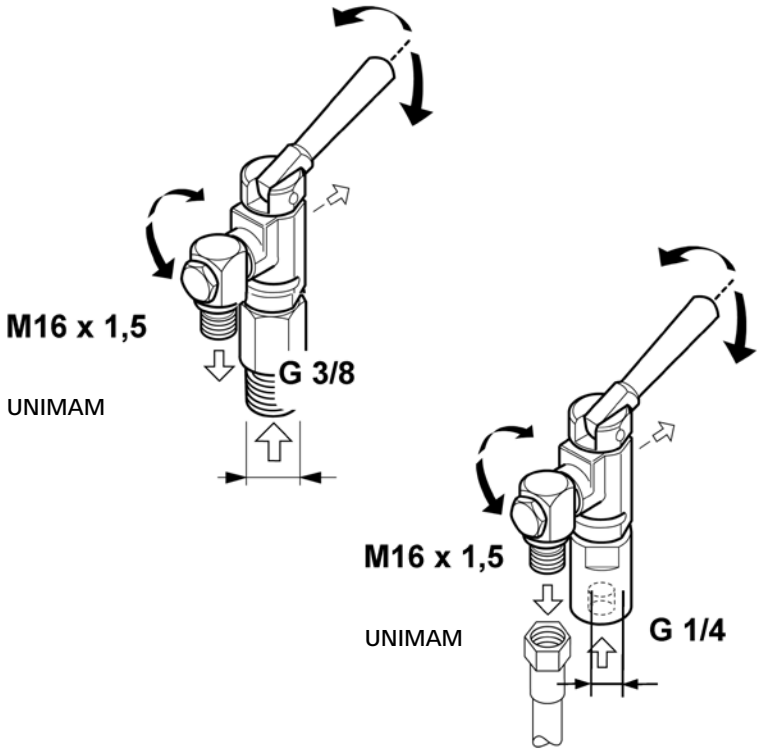

Designation	Part no.
Lever type filling valve for filling hose PN200/300 with flexible angle piece, G 3/8 outside	86327
Lever type filling valve for filling hose PN200/300 with flexible angle piece, G 1/4 inside	86102
Lever type filling valve PN200/300 with red lever and flexible angle piece	11322-S01
Optional	
Repair and maintenance kit up to 1996	N5052
Repair and maintenance kit from 1997 up to 2006	N6676
Repair and maintenance kit from 2007	N29617
Repair and maintenance kit from 2007 Nitrox	N30890

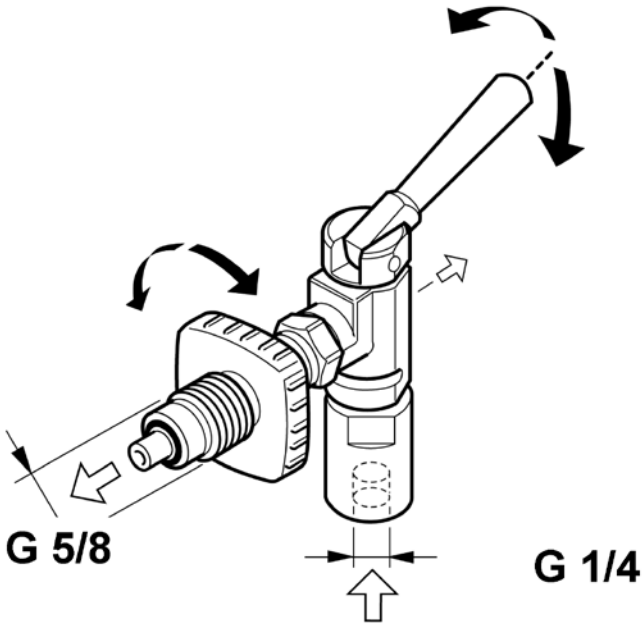

Designation	Part no.
Lever type filling valve with handwheel black for PN200 with sound adsorber	**85877**
Lever type filling valve with handwheel red for PN300 with sound adsorber	**85878**
Sealing cap and chain	**63592 + 063691**
Maintenance kit	
Repair and maintenance kit up to 1996	**N5052**
Repair and maintenance kit from 1997 up to 2006	**N6676**
Repair and maintenance kit from 2007	**N29617**
Repair and maintenance kit from 2007 Nitrox	**N30890**

Filling valve, handwheel type

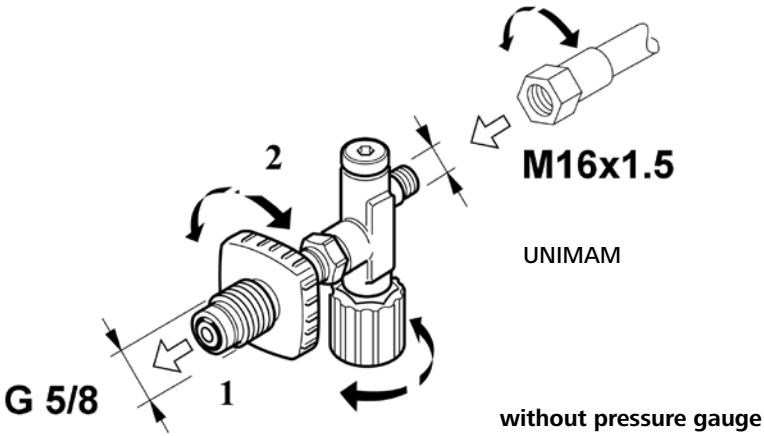

Designation	Part no.
Singles filling valve without pressure gauge for PN200	071744
Singles filling valve without pressure gauge for PN300	071743
Optional	
Repair and maintenance kit	072349
Hand wheel PN200, black	064698
Hand wheel PN300, red	064699
(1) O-Ring 1	N638
(2) O-Ring 2	N16632

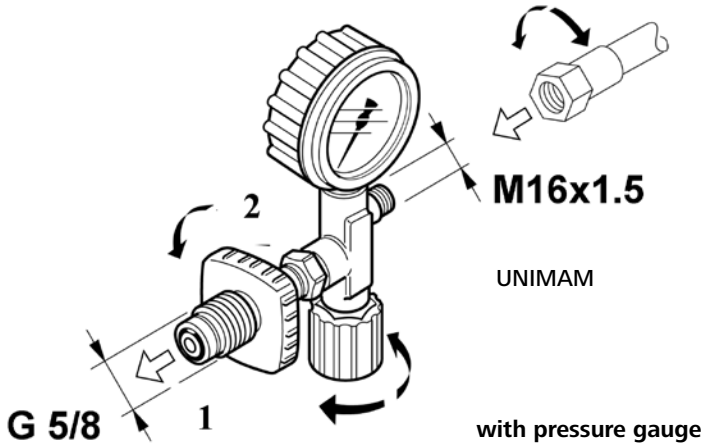

Designation	Part no.
Single filling valve with pressure gauge for PN200	071343
Single filling valve with pressure gauge for PN300	071344
Single filling valve with pressure gauge for PN200 NITROX	83935
Single filling valve with pressure gauge for S30 / PN 200	79193
Single filling valve with pressure gauge for S30 / PN 300	79197
Optional	
Maintenance kit up to approx. 1993	N5051
Maintenance kit as from approx. 1993	072349
Hand wheel PN200, black	064698
Hand wheel PN300, red	064699
(1) O-Ring 1	N638
(2) O-Ring 2	N16632

FILLING VALVE – THROTTLE INSERT

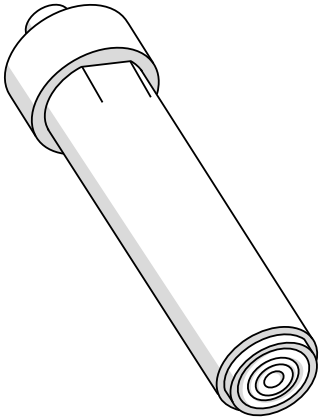

Herewith the filling speed into the compressed air (breathing air) cylinders is reduced.
To fulfil the requirements of the Composite cylinders manufacturers, the increase of pressure is limited to approx. 30 bar/min (among other things to maintain the heating-up of the composite cylinder low).

This cylinder connector (filling valve throttle insert) can be retrofitted at the BAUER filling stations with self-venting lever type valves.

Technical Data PN 200:

- **Admissible operating pressure, PS:** 350 bar
- **Testing over-pressure, PT:** 500 bar
- **Admissible operating temperature, TS:** 5 - 50°C
- **Filling speed, V:** 30 – 35 bar/min with a filling pressure of 200 bar
- **Medium:** air

Technical Data PN 300:

- **Pressure range, PS:** 350 bar
- **Testing over-pressure, PT:** 500 bar
- **Admissible operating temperature, TS:** 5 - 50°C
- **Filling speed, V:** 30 - 35 bar/min bei Fülldruck 330 bar
- **Medium:** air

Designation	Part no.
Filling valve throttle insert 200 bar for PN200	**129217**
Filling valve throttle insert 300 bar for PN300	**129231**

List of connectors and adaptors

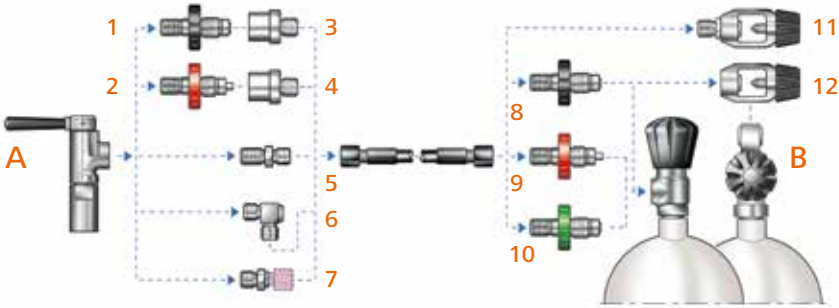

Connection to		Designation	Max. filling pressure	Outlet thread	Part no.
A: Filling	1	German/European bottle connector with safety pin	200	G 5/8	064698
		German/European bottle connector w/o safety pin			077445
	2	German/European bottle connector w/o safety pin	300	G 5/8	064699
		German/European bottle connector with safety pin			077441
	3	Adapter hose PN 200			5951
	4	Adapter hose PN 300			11255
	5	Hose connector		M16 x 1,5 UNIMAM	63596
	6	Winkelanschluss drehbarer Abgang	350	M16 x 1,5 UNIMAM	072539
	7	Special design upon request	350	Nach Angabe	Auf Anfrage
B: Bottle Connector	8	German/European bottle connector	200	G 5/8	07756
	9	German/European bottle connector	300	G 5/8	010912
	10	Bottle connector NITROX	200	M26x2	83974
	11	International bottle connector	200		03147
	12	International bottle connector	200		79375

Safety cylinder connectors

The BAUER Safety cylinder connectors reliably prevent an uncontrolled setback of the hose if the valve is unintentionally opened. The risk of danger is effectively minimized. With the international cylinder connector there is the opportunity to fill a diving cylinder fitted with an ISO valve.
The following connectors are available:

International cylinder connectors

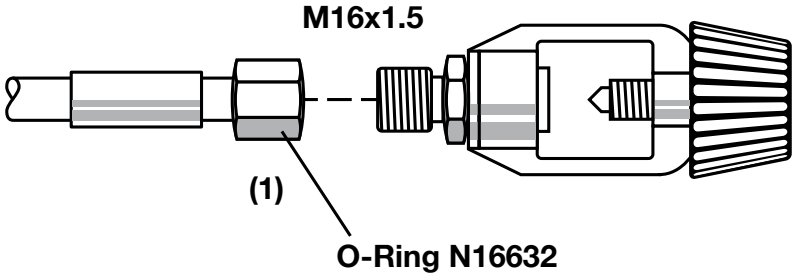

Designation	Part no.
International cylinder connector PN200 complete with handwheel, frame, insert, connector, O-Ring N638 and safety pin	03147
(1) O-Ring	N16632

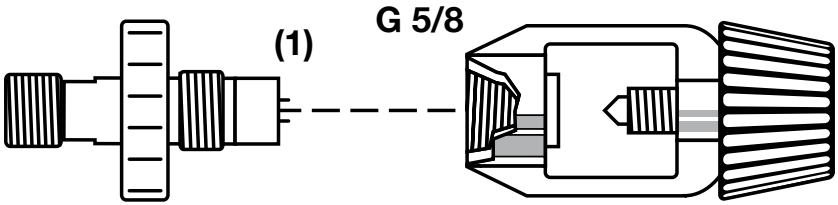

Designation	Part no.
International cylinder connector PN200 complete with handwheel, frame, insert, connector and O-Ring	79375
(1) O-Ring	N638
Special Interspiro cylinder connector PN300 / 90°	83799
Special Interspiro cylinder connector PN300 / straight	83225

Filling Connections

The distribution of compressed air is the last link in the BAUER system and guarantees a safe and simple filling of the compressed air cylinder.

The standardized filling connections (EN 144-2) are available in the PN200 bar and PN300 bar versions for breathing air and as Nitrox version.

The modules are intended for operation without safety valve, without pressure gauge, without console and without condensate drain.
The pressure vessels meet the European regulations for stationary installation.

Filling connection in red

- for 300 bar (330 bar) Breathing air

Filling connection in black

- for 200 bar (225 bar) Breathing air

Filling connection in green

- for 200 bar (225 bar) Nitrox

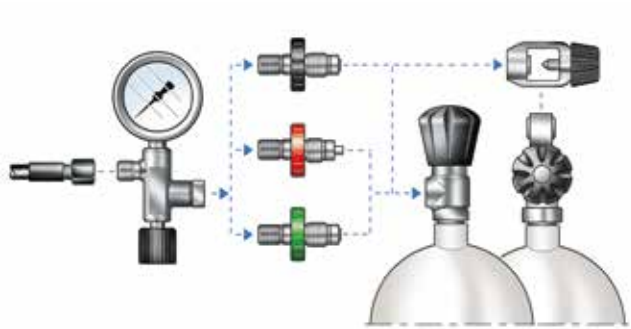

European cylinder connectors

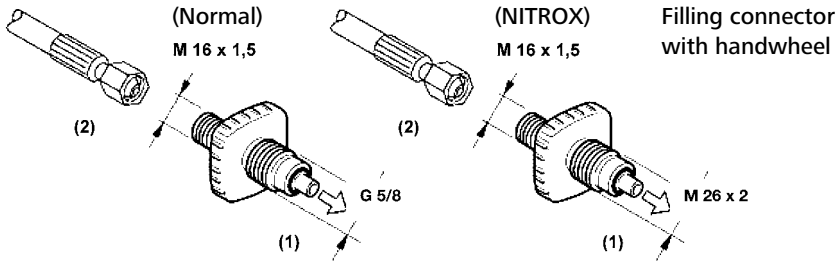

Designation	Part no.
European cylinder connector PN200 cpl. with O-Ring N638	07756
European cylinder connector PN300 cpl. with O-Ring N638	010912
German/European cylinderconnector PN200 for NITROX	83974
Optional	
(1) O-Ring	N638
(2) O-Ring	N16632

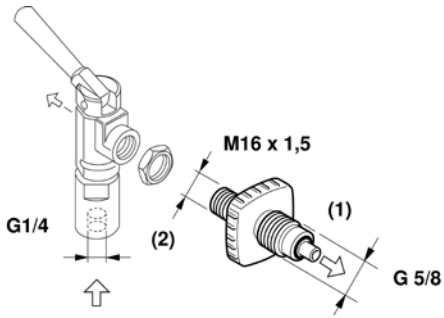

Designation	Part no.
European cylinder connector PN200 (with setback protection)	077445
European cylinder connector PN300 (with setback protection)	077441
(1) O-Ring	N638
(2) O-Ring	N3355
Hand wheel 200 bar complete for hose connection	10859
Hand wheel 300 bar complete for hose connection	11355

› CYLINDER CONNECTOR with spin valve

› A filling valve with integrated non-return valve avoids the flowing back of the remaining gas of the compressed air cylinder to other connected cylinders. This is especially an advantage for the exactly calculated Nitrox mixture.

Filling connector with single venting function

› When removing the valve after the filling, it is automatically vented by turning the valve and a safe removing of the filling valve from the cylinder is possible.

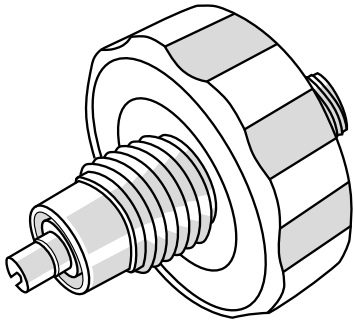

Designation	In	Out	Pressure range	Part no.
Cylinder connector self-venting for B-Safe 300	G 5/8	M16 x 1,5	PN 200	**125085**
Cylinder connector self-venting for B-Safe 300	G 5/8	M16 x 1,5	PN 300	**125083**
Nitrox cylinder connector self-venting for B-Safe 300	M 26x2	M16 x 1,5	PN 200	**125087**

Filling valve, lever type

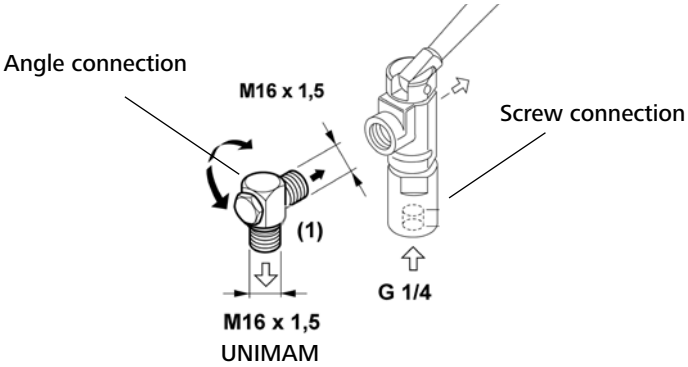

Designation	Part no.
Male connection G ¼ Inner	11347
Banjo connector for filling hose „UNIMAM“	072539
(1) O-Ring	N3355

Mounting clamp

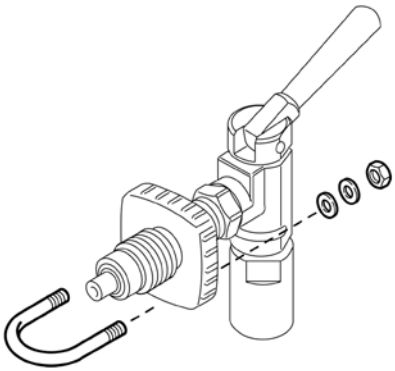

Designation	Part no.
Mounting clamp for filling valve	6942
Gasket	N2862
Lock Gasket	N108
Nut M8	N57

Non-return valves

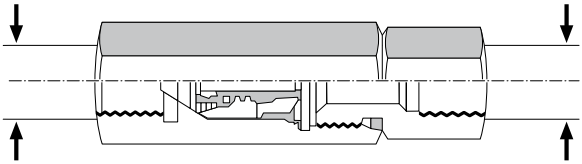

Designation	Operating pressure	Connections	Nominal width	Flow rate *	Part no.
	bar / max.		mm	m³/min.	
Non-return valve	450	2 x G ¼	6	1	**N1463**

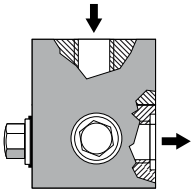

Designation	Operating pressure	Connections	Nominal width	Flow rate *	Part no.
	bar / max.		mm	m³/min.	
Non-return valve	350	2 x Tube ø 12	5	3	**061843**

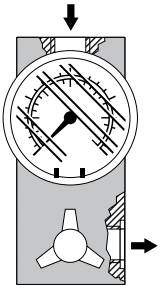

Designation	Operating pressure	Connections	Nominal width	Flow rate *	Part no.
	bar / max.		mm	m³/min.	
Non-return valve with pressure gauge and venting	350	2 x G ⅜	5	3	**064547**

* The specified air flow rate is based on a flow velocity of 15 m/2.

Adaptors

For connection between the European filling connector and the high pressure filling hose.

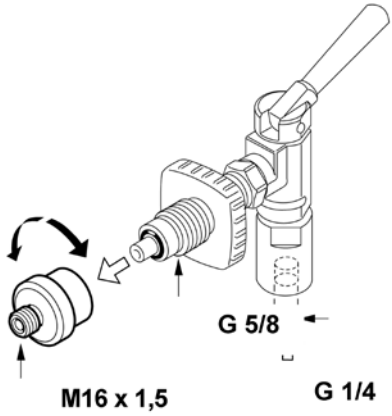

Designation	Part no.
Adapter for filling pressure PN200	5951
Adapter for filling pressure PN300	11255

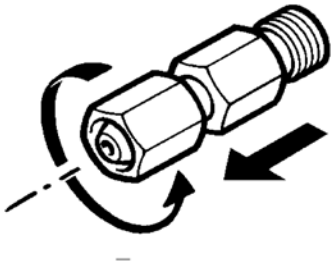

Designation	Part no.
Adapter for old filling hose connector (60° conical) to „Unimam“	068870

Distribution connectors

Necessary if the compressor is fitted with one filling connector, and a second filling connection is required.

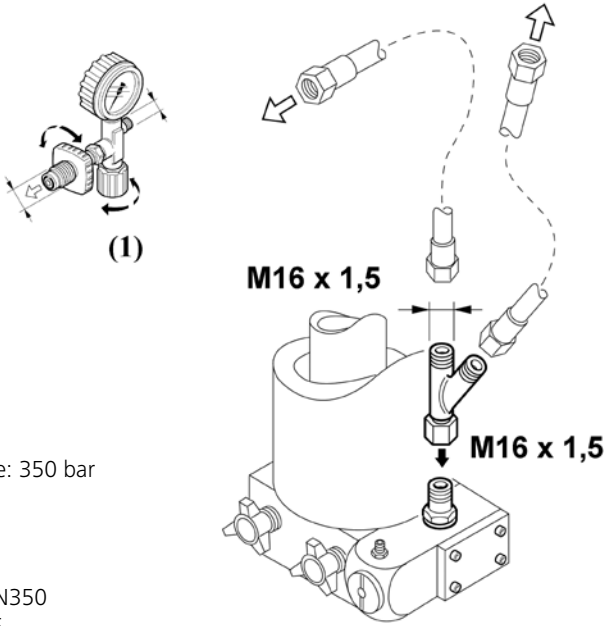

Technical Data:

- Maximum pressure: 350 bar

Delivery scope:

- Y connector
- Hose connector PN350
- G 1/ 4 - M16 x 1,5
- Y connector inlet: Universal sealing cone 24° to 60°
- M 16 x 1,5, UNIMAM
- Outlets: M 16 x 1,5, outer thread, 60° conical

Designation	Part no.
Y connector assy for two filling hoses	073080
Optional	
Filling valve with pressure gauge 200bar (1)	071343
Filling valve with pressure gauge 300bar (1)	071344

Distribution connectors

The filling extension is used to multiply the filling possibilities on a diving compressor in combination with the distribution connectors. Mounting at the pressure retaining / non-return valve.

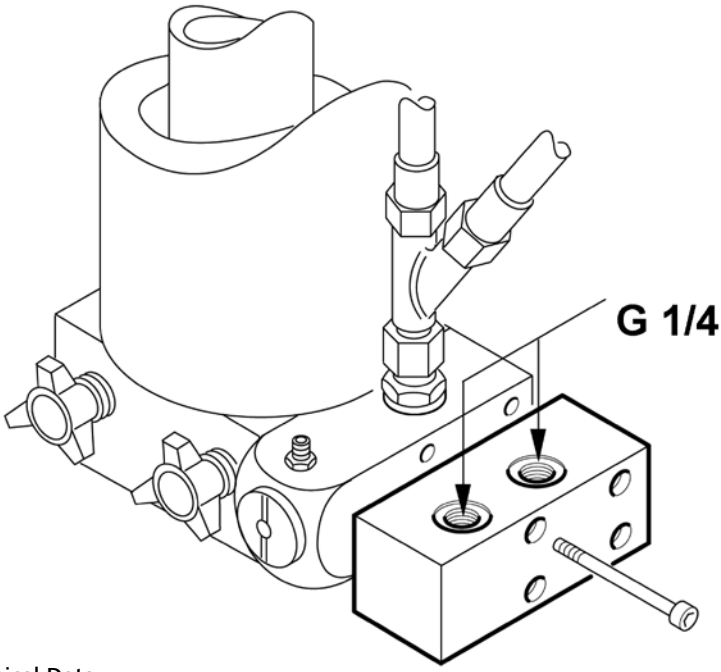

Technical Data:

- Maximum pressure: 350 bar

Delivery scope:

- Distribution piece
- 4 cylinder screws Allen M 6 x 80

Designation	Part no.
Distribution block assy for two additional connections	58968-KD

Filling stations

Filling stations are used for practical and economical filling of breathing air cylinders. From the modular construction of all panels, the controls, right down to the filling connection, BAUER KOMPRESSOREN can offer a customized solution for every situation and fulfill your special needs.

Please, observe the local regulations for the installation!

The filling panels are separately installed from the unit, with standard "open" i.e. not sound absorbing units – and in case of desired local separation which means that the filling panel is located in another area, e.g. in the sales area or the testing area.

Selection of different models of BAUER filling panels.
Every model is made out of tested BAUER components, which offers you the highest possible degree of safety. If you require assistance to configure your filling station we will gladly assist you.
Beside the power of your compressor, the filling volume, the speed and the offered space are important factors.

BAUER KOMPRESSOREN offers the optimal solution for every requirement.
You can find an over view about all installation possibilities and main components from the compressor to the purification, the storage and the distribution on the following pages.

A detailed description of the combination possibilities of the controlling modules and filling panels is on the following pages too.

The diagram shows alternative installation options.
The position numbers refer to the description on the following pages.

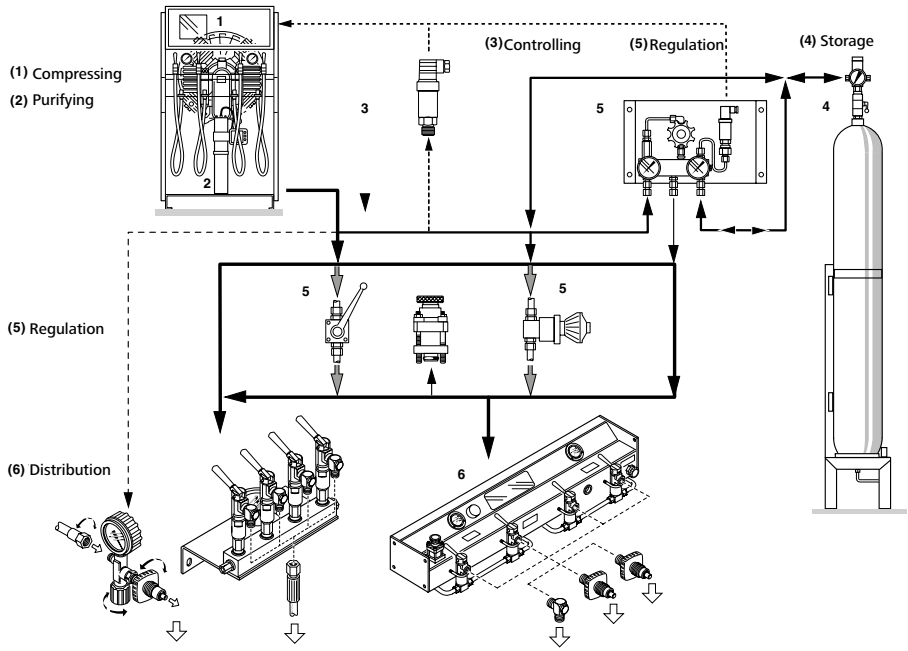

Filling stations

Overview: the components of the unit, the controlling and alternative combination of filling panels models.

COMPRESSING AND PURIFYING

› High pressure-compressor unit (1) complete with purifying system (2) and safety valve.
We recommend the unit with automatic Condensate drain and compressor control, to give the possibility to run the unit automatically.

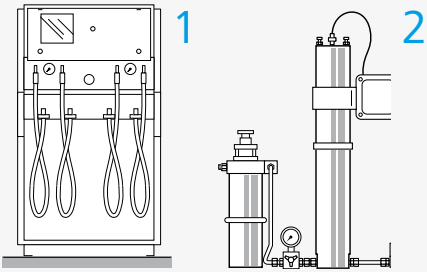

STORAGE

› Rack of cylinders (3) to provide a sufficient quantity of compressed air see chapter Storage.

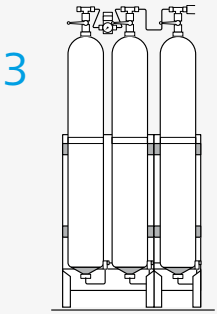

CONTROLLING, AUTOMATICALLY

› The automatic switching device is the only way to use the advantage of storage cylinders in an optimal way. The automatic consists a pressure maintaining – and a non-return valve and integrated pressure switch or pressure sensor, which turn the compressor unit on or off, when needed. When using this automatic a cascade-filling switch is not needed.

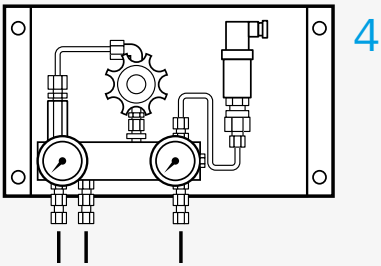

CONTROLLING, MANUALLY

› Change-over valves (5): Here the valve and the compressor have to be switched on manually, after reaching the same pressure in the to be filled cylinder and the rack of vessels. This solution is only recommended, if the unit is operated by trained staff only!

5

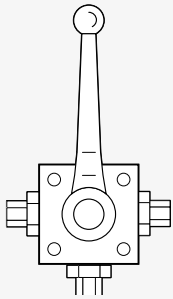

DISTRIBUTION

› Distribution panel (6): Compact diver filling panel for mounting on the compressor or to the wall, 1 - 4 filling connectors possible.

6

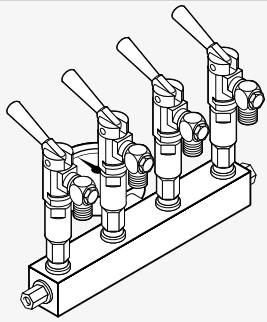

DISTRIBUTION EXTERNAL FILLING PANEL

› Filling panel with direct connection for breathing air cylinders or for the filling procedure with hose connection possible. Filling valves four – or even six times. Optional: pressure reducers and safety valves for dual pressure range.

7

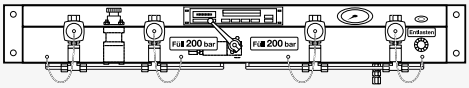

Overview filling panels for wall mounting

- Filling pressure 200 and / or 300 bar
- Lever type filling valves
- 4 - 6 filling connections
- Connection of filling hoses or direct connection for cylinders (max. 15 kg)
- Max. dimensions: 1200 x 138 x 300 mm (with six direct connections)
- Operating range for all supply volumes
- Operating temperature from +5° to +45° C,
- Compatible with all chiller units

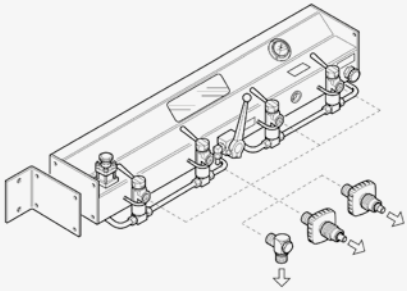

Panel

- Filling pressure 200 or 300 bar
- Lever type or handwheel type
- Filling valves
- 1 - 4 filling connectors
- Connection of filling hoses
- Max. dimensions: 239 x 150 x 150 mm (with four hose connectors and lever type filling valves)
- Safety equipment (refer to table)
- Operating range for all supply volumes
- Operating temperature from +5° to +45° C
- Compatible with all chiller units

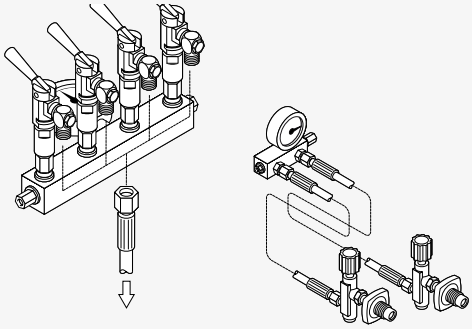

Distribution panel

Model range ‘External Filling Panel’

Complete filling stations are used for a practical and rational filling of breathing air cylinders. The main components are the compressor unit, the storage, automatic switch device or change-over valves and the filling panel (you can find a detailed functional description in the chapter “Filling stations”).

The ‘External Filling Panel’ can be mounted as a separate filling panel on the wall and can also be used, equipped with a remote control, for the installation in another area.

Please, take care of the different combination options with the automatic switch device as well as the BAUER Control COMP-TRONIC and B-CONTROL. You can find the description in the appropiate chapters.

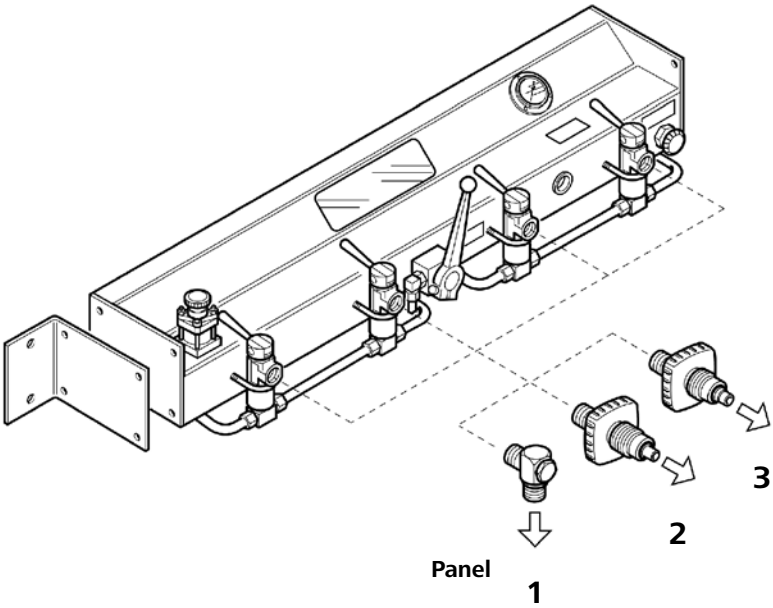

1) Hose connection with angle piece
2) Cylinder direct connection PN 200
3) Cylinder direct connection PN 300

› Selection criteria

Filling valves	› lever type
Dimensions	with hose connectors › 4x: 1140 mm x 138 mm x 250 mm › 6x: 1200 mm x138 mm x 250 mm with direct connectors › 4x: 1140 mm x 138 mm x 300 mm › 6x: 1200 mm x 138mm x 300 mm
Safety features	› safety valve › pressure sensor › pressure reducer or optional change-over valve with or without B-CONTROL or pressure gauge
Use	› independant from delivery rate › compatible with all chiller units › ambient temperature from +5° C to +43° C

Advantages

Design	› unsuperseeded quality of the panel and the filling valves
Ergonomy	› tested system
Model range	› expandable with any additional external panel
Quality and safety	› CE – standards › corrosion resistant material › can be fitted with safety valves and pressure reducers
Combination with filling valves	› many different options (see product information filling valves) › wide model range for any kind of application

External Filling panels with direct cylinder connector

External filling panels with direct cylinder connector for wall mounting

BAUER B-CONTROL allows you Remote control in another area. The single function indications and fault warnings are transmitted and shown on the display. Further details about the B-CONTROL in our sales documents.

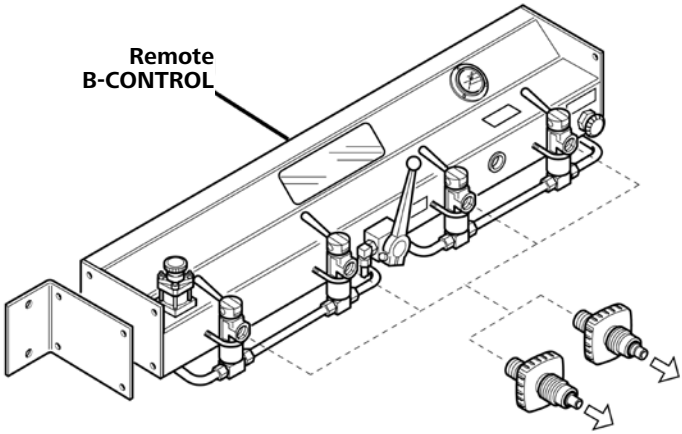

Version	SIV 225 bar	Pressure sensor	B-Control	Switch-over valve	Pressure reducer	Part no.
Without B-control panel, with 4 connections						
200 bar, 4x, direct						**075026**
300 bar, 4x, direct						**075030**
200 bar, 4x, direct	X					**075027**
200 bar, 4x, direct	X	X				**75028-BC**
200/300 bar, 4x, direct	X			X		**075005**
200/300 bar, 4x, direct	X	X		X		**75004-BC**
200/300 bar, 4x, direct	X				X	**075007**

External Filling panels with direct cylinder connector

Version	SIV 225 bar	Pressure sensor	B-Control	Switch-over valve	Pressure reducer	Part no.
Without B-Control-panel, with 6 connections						
200 bar, 6x, direct						075040
300 bar, 6x, direct						073740
200 bar, 6x, direct	X					075041
200 bar, 6x, direct	X	X				75050-BC
200/300 bar, 6x, direct	X			X		075008
200/300 bar, 6x, direct	X	X		X		75009-BC
200/300 bar, 6x, direct	X				X	075011
With B-Control-panel*³, with 4 connections						
200 bar, 4x, direct			X			75029-BC
300 bar, 4x, direct			X			73235-BC
200 bar, 4x, direct	X	X	X			73232-BC
200/300 bar, 4x, direct	X	X	X	X		73236-BC
200/300 bar, 4x, direct	X		X		X	75006-BC
With B-Control-panel*³, with 6 connections						
200 bar, 6x, direct			X			75043-BC
300 bar, 6x, direct			X			73231-BC
200 bar, 6x, direct	X	X	X			73237-BC
200/300 bar, 6x, direct	X	X	X	X		73228-BC
200/300 bar, 6x, direct	X		X		X	75010-BC

Version	SIV 225 bar	Pressure sensor	B-Control	Switch-over valve	Pressure reducer	Part no.
With B-Control-panel*³, with 10 connections						
200/300 bar, 10x, direct	X		X		X	76769-BC
Without BHW*²-switching panel, with 4 connections						
200 bar, 4x, direct	X	X				75028-BHW
200/300 bar, 4x, direct	X	X		X		75004-BHW
Without BHW*²-switching panel, with 6 connections						
200 bar, 6x, direct	X	X				75050-BHW
200/300 bar, 6x, direct	X	X		X		75009-BHW
With BHW*²-switching panel, with 4 connections						
200 bar, 4x, direct			X			75029-BHW
300 bar, 4x, direct			X			73235-BHW
200 bar, 4x, direct	X	X	X			73232-BHW
200/300 bar, 4x, direct	X	X	X	X		73236-BHW
200/300 bar, 4x, direct	X		X		X	75006-BHW
With BHW*²-switching panel, with 6 connections						
200 bar, 6x, direct			X			75043-BHW
300 bar, 6x, direct			X			73231-BHW
200 bar, 6x, direct	X	X	X			73237-BHW
200/300 bar, 6x, direct	X	X	X	X		73228-BHW
200/300 bar, 6x, direct	X		X		X	75010-BHW
With BHW*²-switching panel, with 10 connections						
200/300 bar, 10x, direct	X		X		X	76769-BHW
Without switching panel, with 10 connections						
200/300 bar, 10x, direct	X				X	76769

*² BHW = BauerHardWired --> possible for units with conventional control, e.g. Mini-Verticus

External Filling panels with hose connection

External filling panels with direct cylinder connector for wall mounting

BAUER B-CONTROL allows you Remote control in another area. The single function indications and fault warnings are transmitted and shown on the display. Further details about the B-CONTROL in our sales documents.

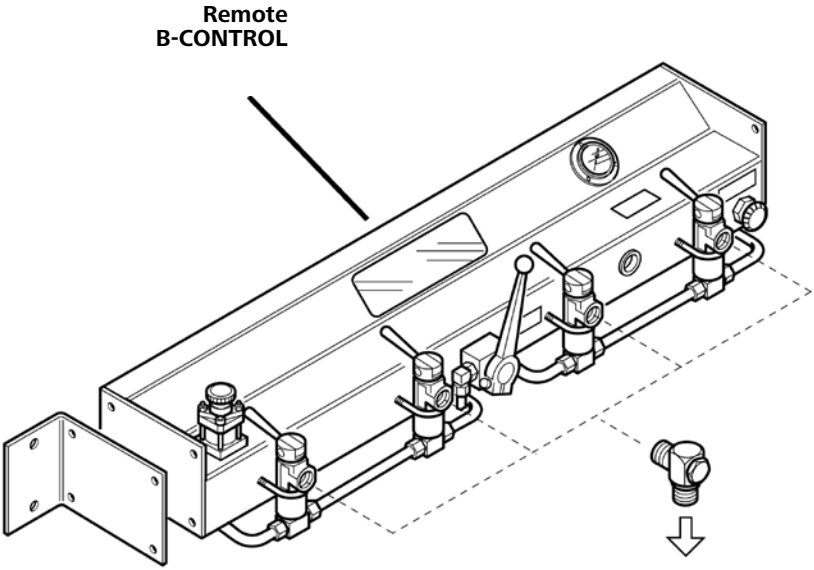

Version	SIV 225 bar	Pressure sensor	B-Control	Switch-over valve	Pressure reducer	Part no.
Without B-control panel, with 4 connections						
200 bar, 4x, hose						068019
300 bar, 4x, hose						068020
200 bar, 4x, hose	X					072590
200 bar, 4x, hose	X	X				72597-BC
200/300 bar, 4x, hose	X			X		068023
200/300 bar, 4x, hose	X	X		X		72598-BC
200/300 bar, 4x, hose	X				X	068025
Without B-Control-panel, with 6 connections						
200 bar, 6x, hose						075031
300 bar, 6x, hose						075035
200 bar, 6x, hose	X					066721
200 bar, 6x, hose	X	X				073587
200/300 bar, 6x, hose	X			X		075037
200/300 bar, 6x, hose	X	X		X		75038-BC
200/300 bar, 6x, hose	X				X	075039

*2 BHW = BauerHardWired --> possible for units with conventional control, e.g. Mini-Verticus

External Filling panels with hose connection

Version	SIV 225 bar	Pressure sensor	B-Control	Switch-over valve	Pressure reducer	Part no.
With B-Control-panel*³, with 4 connections						
200 bar, 4x, hose			X			73083-BC
300 bar, 4x, hose			X			73084-BC
200 bar, 4x, hose	X	X	X			72591-BC
200/300 bar, 4x, hose	X	X	X	X		73085-BC
200/300 bar, 4x, hose	X		X		X	73086-BC
With B-Control-panel*³, with 6 connections						
200 bar, 6x, hose			X			75033-BC
300 bar, 6x, hose			X			75036-BC
200 bar, 6x, hose	X	X	X			75034-BC
200/300 bar, 6x, hose	X	X	X	X		73625-BC
200/300 bar, 6x, hose	X		X		X	73153-BC
Without BHW*²-switching panel, with 4 connections						
200 bar, 4x, hose	X	X				72597-BHW
200/300 bar, 4x, hose	X	X		X		72598-BHW
Without BHW*²-switching panel, with 6 connections						
200/300 bar, 6x, hose	X	X				75038-BHW
With BHW*²-switching panel, with 4 connections						
200 bar, 4x, hose			X			73083-BHW
300 bar, 4x, hose			X			73084-BHW
200 bar, 4x, hose	X	X	X			72591-BHW
200/300 bar, 4x, hose	X	X	X	X		73085-BHW
200/300 bar, 4x, hose	X		X		X	73086-BHW

*² BHW = BauerHardWired --> possible for units with conventional control, e.g. Mini-Verticus

Version	SIV 225 bar	Pressure sensor	B- Control	Switch-over valve	Pressure reducer	Part no.
With BHW*2-switching panel, with 6 connections						
200 bar, 6x, hose			X			75033-BHW
300 bar, 6x, hose			X			75036-BHW
200 bar, 6x, hose	X	X	X			75034-BHW
200/300 bar, 6x, hose	X	X	X	X		73625-BHW
200/300 bar, 6x, hose	X		X		X	73153-BHW

Filling panel

Filing pressure

- 225 or 330 bar

Filling valves

- Lever type

No. of filling connections

- 1 to 4

Dimensions

- **With lever:**
  one 109x150x150mm
  to four 239x150x150mm
- **With handwheel:**
  one 109x150x80mm to
  four 239x115x80mm
- **More details see list**

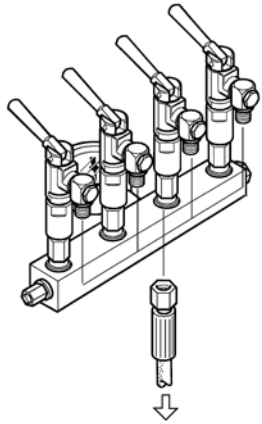

Filling block with lever valves

Mounting

- For wall mounting. Allows vertical hose by means of a banjo connector means of a banjo connector
- Advantage: very slim design, needs less room when mounted at unit room when mounted at unit

Safety features

- Pressure gauge

Operating range

- Independant from delivery rate
- Compatible with all chiller units
- Ambient temperature from +5° C to +45° C

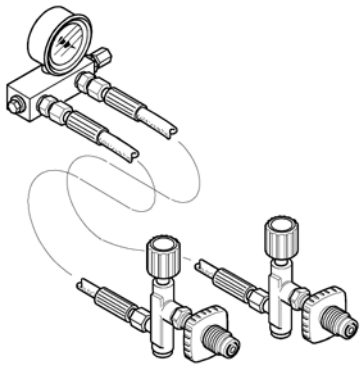

Filling block with handwheel valves

Article part numbers and equipment specifications: see list, selection criteria and product information of filling valves lever type in chapter 'Filling valves'

Product-advantages at one glance

Design

- Simple construction
- Compact, especially suitable for retrofitting your unit
- Ideal for boats and other mobile stations with limited space

Options

- Wide range of versions (see list)

Quality and safety

- Extraordinary quality of the filling valves (see list)
- Material corrosion protected
- Complies with CE – standards
- Equipment with with safety valves and pressure reducer

Combination with filling valves

- Wide range of different options (see product information filling valves)
- Wide model range for all kind of applications

Filling block with hose connection

for mounting at portable breathing air compressor units (with crash-frame)

Filling pressure	Unit pressure	Type of filling valves	Part nos.			
bar	bar / max.		with 1 connection	with 2 connections	with 3 connections	with 4 connections
200	225	lever	073519	073520	073208	073521
300	330	lever	073956	073957	073958	073959
200	225	handweel	074962	074963	074964	074965
300	330	handweel	074966	074967	074968	074969

Delivery scope: all fillling blocks consist of manifold, filling valve, filling hose and pressure gauge.

Automatic selector Device

Text

Advantages

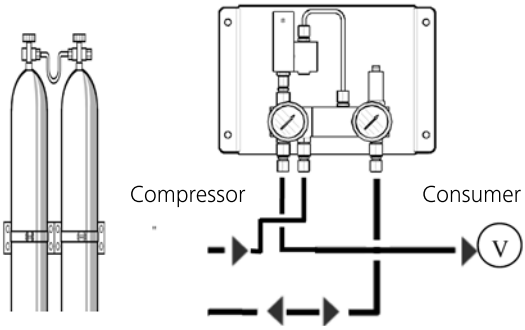

The automatic switching device allows automatic refilling of one or more breathing air cylinders on filling panels from an intermediate storage vessel and from the compressor at the same time. breathing air cylinders always have priority, which means that the storage vessel and the compressor always fill first the pressure vessel. If the breathing air cylinders is full, the intermediate storage vessel is filled up automatically by the compressor until a new empty cylinder is connected to the filling panel.

Function

After connecting the breathing air cylinders to the filling panel and opening the valves, air flows from the intermediate storage vessel into the breathing air cylinder. This continues until the pressure balance is reached between breathing air cylinder and storage vessel. The compressor starts automatically and fills first the breathing air cylinder until it reaches its max. pressure. When the breathing air cylinder is filled, the compressor continues filling automatically the intermediate storage vessel and switches off automatically when the maximum filling pressure is reached.

The three functions of the automatic device are:

- Prefillling the breathing air cylinders from the storage vessel to reach the pressure balance.
- Filling the breathing air cylinders until the max. filling pressure directly from the compressor.
- Refilling of the storage vessel to max. storage pressure.

The unit consists of a pressure retaining valve and no-return valve and an integrated pressure sensor which starts or stops the compressor. This unit replaces a cascade filling arrangement. The pressure gauges monitor the previous pressure and the pressure. The pressure sensor controls the compressor.

Automatic selector device with for pressure switch and pressure sensor for Comp-TRONIC / B-Control

Technical Data:

- **Inner diameter:** DN4
- **Operating pressure:** PN350 bar
- **Adjustment range:** overflow valve / pressure retaining valve: 100 - 350 bar
- **Dimensions:** B x H x T: 400 x 250 x 150 mm

Connections:

- **Inlet:** G 3/8, connection for either Ø 8 mm or Ø 10 mm pipe
- **Outlet:** Ø 8 or Ø 10 mm

Delivery scope:

- The unit is complete and ready for installation

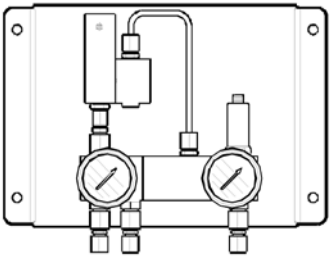

Designation	Part no.
Automatic selector device with pressure sensor N25421, up to 350 bar, B-Control and pressure retaining valve 80751	**82116-KD**
Automatic selector device with pressure switch N4526, up to 350 bar, BC2/BC6 or MV2 (without B-Control/Comptronic) and pressure retaining valve 80751	**82116-S02**
Automatic selector device with pressure sensor N25421, up to 350 bar, B-Control and pressure retaining valve 80751, stainless steel	**82116-S03**
Automatic selector device with pressure sensor B-Control, up to 420 bar	**82117**
Automatic selector device with pressure switch, up to 350 bar and TESCOM pressure regulator	**062796**
Automatic selector device with pressure sensor N19999 for Comp-Tronic up to 350 bar and TESCOM pressure regulator	**072862**
Automatic selector device with 2 pressure sensors Comp-Tronic, up to 350 bar	**074875**

Pressure gauges

The pressure gauges shown below are hermetically sealed, filled with glycerine and have internal pressure compensation. We recommend these pressure gauges for high dynamic loads, pressure peaks, vibrations and pulsations.
The liquid in the gauge dampens the effect of vibrations and pulsations on the pointer. This ensures a steady and precise reading and longer gauge life.
Due to its hermetic construction no problems exist with condensation, with penetration of aggressive atmosphere and so there is no danger of corrosion.

The pressure gauges have a solid steel plate housing made of CrNiSteel with a pressure discharge orifice in the rear of the housing. A plastic cover closes this opening.

Technical Data:

- **Material:** brass
- **Front ring:** Cr-Ni-steel
- **Measuring device:** copper alloy
- **Scale:** white
- **Medium:** air, gases
- **Display:** bar / psig.
- **Accuracy:** class 1.6
- **Ambient temperature:** - 25 °C to + 60 °C

pressure gauge, connection at the bottom

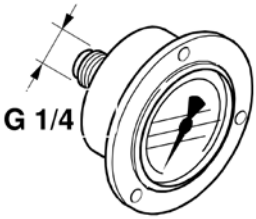

pressure gauge, connection at the rear

Pressure gauge specifications

All our pressure gauges are suitable for air and inert gases. Furthermore we recommend the use of our pressure gauges in a range of 10% - 70% of the reading.

Pressure range	Connection G1/4		Ø 63	Front-ring	Glycerine filling	S* version acc. to	Accuracy class	Part no.
bar	bottom	rear				DIN16007	1.6	
-1 - 1,5		X	X	X	X	X	X	N3865
0-10		X	X	X	X	X	X	N16758
0-16		X	X	X	X	X	X	N1269
0-16		X	X		X	X	X	N22331
0-25		X	X	X	X	X	X	N1270
0-40		X	X	X	X	X	X	N18041
0-60		X	X	X	X	X	X	N15543
0-100		X	X	X	X	X	X	N1271
0-160		X	X	X	X	X	X	N1273
0-250		X	X	X	X	X	X	N7673
0-315	X		X			X	X	N1315
0-400		X	X		X	X	X	N22330
0-400		X	X	X	X	X	X	N2623
0-400	X		X			X	X	N4101
0-600	X		X		X	X	X	N16872
0-600		X	X		X	X	X	N17062
0-600		X	X	X	X	X	X	N17351

*safety version

Adaptors for pressure gauges

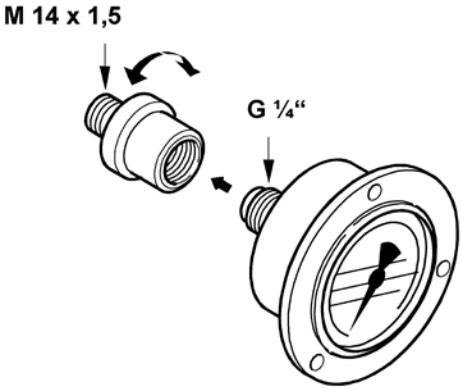

Designation	Part no.
Connector for pressure gauge ∅ 63	N3569

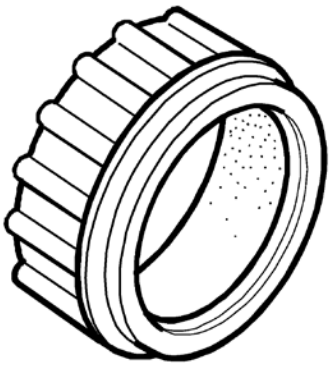

Designation	Part no.
Rubber protection cap	N15985
Plug (pressure gauge plug)	N26664-KD

EXTERNAL FILLING STATION WITH AIRCHIP 2

AIR CHIP 2, the cashless, accessible system for the management of breathing air compressors and external filling stations. It controls on the stroke of time, establishing the exact date and moment, independent of currency, in different languages, fit for mains the auto-selecting amount of cycles.

Advantages:

- Settlement on the stroke of time of the taken amount of air
- The filling indepent of the place is possible (230V must be available
- Full proof of access and filling duration is given
- 24 hour service is possible
- Service without staff is possible
- Trained users have access to the filling system (according to the legal requirements)
- The controller of the installation can block at any time the access for individual users
- The controller can start actions at any time (for example, birthday presents, etc.)

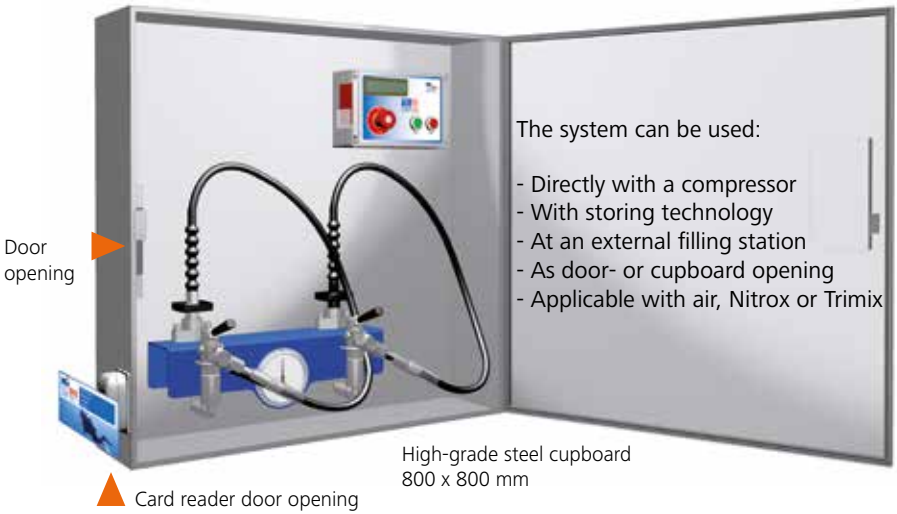

Components of the external filling station (standard, complete installed in a high-grade steel cupboard)

AIR Chip II with control unit
- Card support and – reader
- On/off emergency button
- Display
- Netbook with preinstalled control software and user manual

Filling panel double with
- Lever type valve
- Filling hose 1 m
- Cylinder valve 200 bar DIN
- Pressure gauge
- Support for hose
- Installed on console
- Final pressure disconnection

Door opening system with card reader
- Installed in a high-grade steel cupboardk

Options (cheaper / more expensive)
- Filling panel single
- Filling panel 4-fold connecting options 300 bar / INT / M26 x 2
- When store operation magnetic valve closed without current flow throttle

Chip cards:
- Blank or printed, possible on both sides

Functioning:

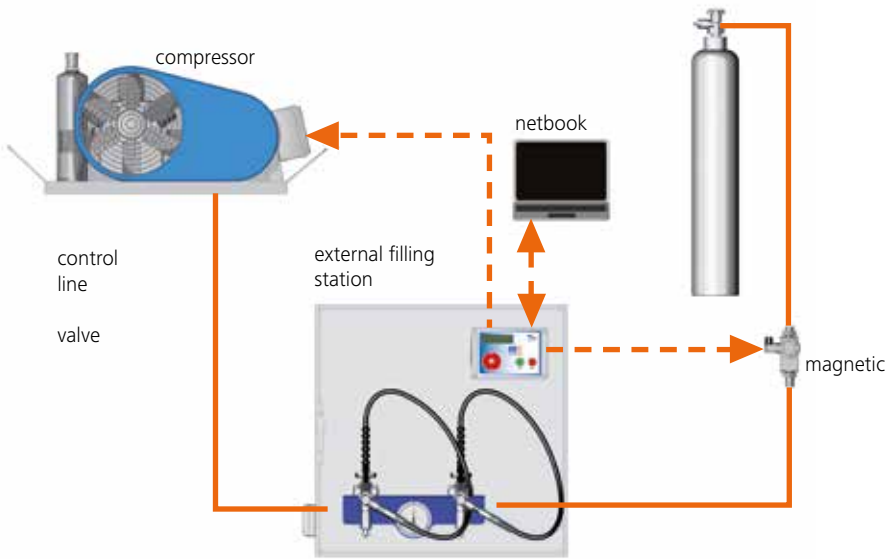

Designation, content	Part no.
External filling station complete **- Control unit AirChip 2** **- Door opening system** **- Filling panel double** Lever type valve Filling hose 1 m Filling connector 200 bar DIN G 5/8 Optionally 300 bar DIN G 5/8 Pressure gauge Final pressure disconnection installed on console **- Netbook** Preinstalled software User manual **- High-grade steel cupboard** 760 x 760 x 300 mm **- Connection box** 200 x 300 x 160 mm	HUBBKMAV1
When store operation **- Magnetic valve** **- Flow throttle**	HUBBKMSP1
Chip cards **- Blank** **- Printed, both sides possible** (print pattern in jpg size)	 HUBBKMCb HUBBKMCd
Options **- Filling panel single** (cheaper) **- Filling panel threefold** (price increase) **- Filling panel 4-fold** (price increase)	 HUBBKMFL1 HUBBKMFL3 HUBBKMFL4

Operating hours counter

Operating hours counter, electric

Electric operating hours counter, recommended for compressor units with electric power supply. Housing Ø 60 mm for flush mounting with mounting bracket.

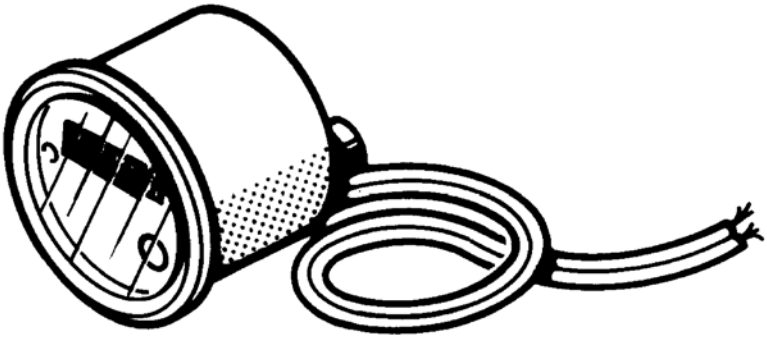

Designation	Measurement	Part no.
Operating hours counter 230V, 60Hz	50,2 x 25,2 mm	**N21791**
Operating hours counter 24VDC	92 x 92 mm	**N20785**
Operating hours counter 230V, 50Hz	Ø 61 mm	**N3263**
Operating hours counter 230V, 60Hz	Ø 61 mm	**N3264**
Operating hours counter 115V, 60Hz	Ø 61 mm	**N3265**
Operating hours counter 12/24VDC	Ø 60 mm	**N1734**
Operating hours counter 24V, 50/60Hz	56 x 56 mm	**N23853**
Operating hours counter 230V 60Hz	Ø 50 mm	**N22338**
Operating hours counter 230V	50.2 x 25,2 mm	**N21791**
Operating hours counter 230V	45 x 45 mm o. Ø 50 mm	**N16208**
Operating hours counter 230V	45 x 45 mm o. Ø 50 mm	**N16625**
Operating hours counter 12V DC		**N18345**
Operating hours counter 24V 50Hz		**N18365**

Operating hours counter, mechanical

Vibration counter, recommended for compressor units with petrol or diesel engines without an electrical power source and also for explosion-proof installations.

Designation	Part no.
Vibration counter for units with petrol/Diesel engine	N3475

Operating hours counter – Filter cartridge monitoring, battery operated

Electronic operating hours counter including filter cartridge monitoring, recommended for all non-exproof compressors.

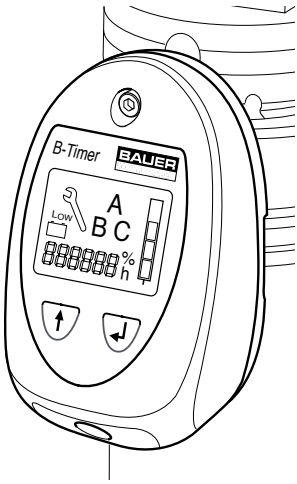

Technical Data:

- **Monitoring:** from P21 to P41
- **Operating period:** 3 years with 500 operating hours/year
- **Operating hours counter:** integrated
- **Display:** maintenance, maintenance kit, flashing sign, saturation bar, cartridge number
- **Properties:** dust and splash water protected, resistant Against dust, sun rays, high humidity and sand.

Designation	Part no.
B-Timer	N27286
Replacement battery	82743

Temperature gauge

Remote temperature gauge to indicate the temperature of the last stage (for models Bauer UTILUS to KAP 180). Mounted at aftercooler with a pipe Ø 6 mm.

Technical Data:

- **Housing:** Ø 60 mm, flush mounted with clamp
- **Range:** 0° - 200° C
- **Length of feeler line:** 1,5 m
- **Connection:** thread G ¼

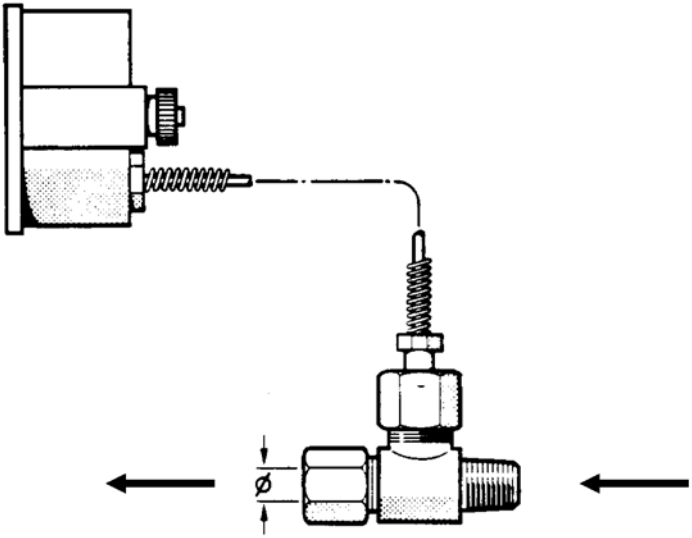

Thread G ¼

Designation	Part no.
Remote temperature gauge	**059125**

Pressure monitoring

Pressure control unit

Pressure control units are components for automatic pressure control of the compressor units and pressure vessels. They control e.g. oil pressure, intermediate and final pressure. When the adjusted pressure is reached the electrical contact switches over as required.

The typical compact pressure control unit used for the filling procedure is a piston pressure switch. It is used to control the final pressure during the filling procedure (breathing air installations) in combination with a semi-automatic control system. Adjustable switch-off pressure.

Technical Data:

- **Switching actions:** max. 60 per minute
- **Permanent load:** with AC max. 250 V / 5A. With DC 30 V / 5 A
- **Protection class:** IP65
- **Switching accuracy:** +/- 3 % of adjustment range
- **Temperature range:** - 40° C to + 80° C
- **Material of the contacts:** silver
- **Working contacts:** 1 change-over

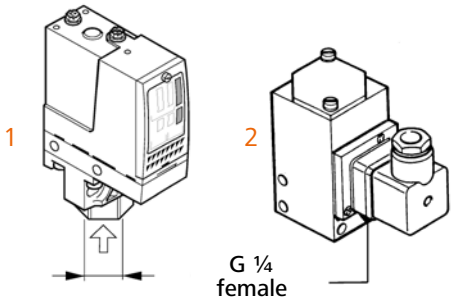

	Adj. range		Hysteresis	Voltage	Max. pressure		Part no.
	bar / min.	bar / max.	bar	max. Volt	continuous bar	occasional bar	
1	7	70	4,7 bis 50	500	90	160	**N15014**
	10	160	9,3 bis 100	500	200	360	**N16361**
	22	300	19,4 bis 200	500	375	675	**N4527**
	30	500	23,0 bis 300	500	625	1125	**N4526**
2	100	400	-	250	400	400	**N1010**

Pressure monitoring

Pressure transducer for COMP-TRONIC

Instead of pressure switches pressure transducers are used for fully electronic control of analog inputs. The sensors are adjusted for our COMP-TRONIC control unit. The measuring values of the pressure transducers are displayed in bar or psig, and can be evaluated as operating, maintenance, prewarning or error messages.

Technical Data:

- **Medium:** air, gases
- **Material housing and parts with contact to medium:** DIN17440-1.4404 (AISI 316 L)
- **Weight:** 0,3 kg
- **Linearity deviation (Min. value setting):** + / -0,2% FS
- **Hysteresis and reproduceability:** + / -0,1 % FS
- **Nom. output signal:** 1-5 VDC; 3-wire
- **Supply voltage:** 10-30 V DC
- **Current consumption:** < 5 mA
- **Connector:** plug DIN43650
- **Cable type:** IP 67 – IEC 529
- **Temperature range:** - 40° to + 85°C
- **EMC emission:** EN50081-1
- **Accuracy:** typ. + / - 0,3% FS; max. + / -1% FS

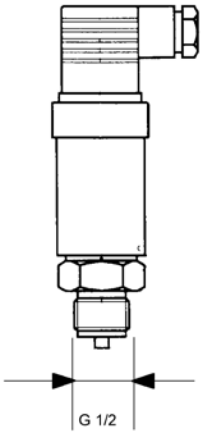

Designation	Part no.
Range 0 - 25 bar	N19997
Range 0 – 100 bar	N19998
Range 0 – 400 bar	N19999
Range 0 – 600 bar	N20813
Fitting for 6mm tube	N20176
Gasket for 6mm tube	N3081

Pressure transducer for B-CONTROL

The following pressure transducers are available for B-Control : (ouput signal 4-20 mA)

Technical Data:

- **Medium:** air, gases
- **Material housing and parts with contact to medium:** DIN17440-1.4404 (AISI 316 L)
- **Weight:** 0,2 kg
- **Linearity deviation (Min. value setting):** + / -0,1% FS
- **Hysteresis and reproduceability:** + / -0,1 % FS
- **Nom. output signal:** 4 to 20 mA
- **Supply voltage:** 12,5-28 VDC
- **Current consumption:** < 28 mA
- **Connector:** plug IEC 947-5-2 M12x1
- **Cable type:** IP 67 – IEC 529
- **Temperature range:** - 40° to + 85°C
- **EMC emission:** EN50081-1
- **Accuracy:** typ. + / - 0,1% FS; max. + / -5% FS

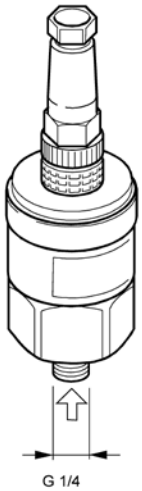

Designation	Part no.
Range 0 to 25 bar	**N25419**
Range 0 to 100 bar	**N25420**
Range 0 to 400 bar	**N25421**
Range 0 to 600 bar	**N25422**
Range –1 to +1.5 bar	**N25418**
Gasket	**N4051**
Reducer	**N18311**

Valves

Venting valves

These assemblies are designed for mounting in the main airstream. They allow to depressurize filters under pressure in order to perform necessary maintenance.

Delivery scope:

- Venting valve complete with pressure gauge.

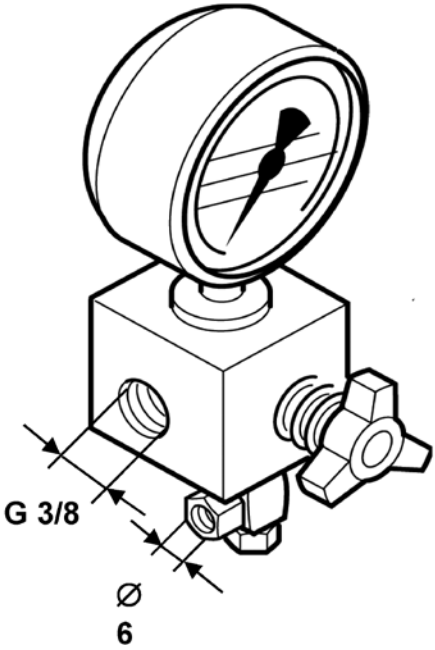

Designation	Pressure	pressure gaug	Part no.
	bar / max.	bar	
Venting valve with pressure gauge	420	0 – 600	**064566**
Venting valve with pressure gauge and non-return valve	420	0 – 600	**065839**

Delivery scope:

- Venting valve for depressurizing only, mounted at panel or housing.

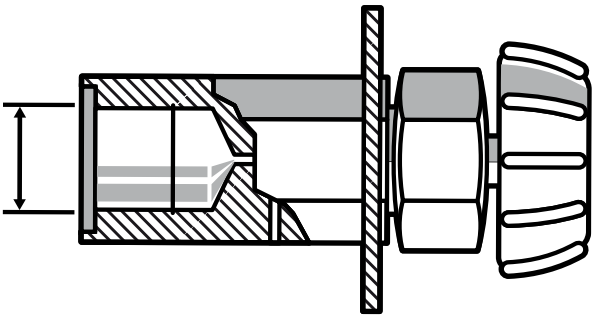

Designation	Operating pressure	Connection	Venting bore	Part no.
	bar / max.	max. bar	∅ mm	
Venting valve for panel	350	G 3⁄8 Inner	1,5	061650
Venting valve for panel	350	G ¼ Inner	1,5	060374

Safety valves, TÜV certified

BAUER Safety valves control the pressure absolutely reliable – for your security. Safety valves serve according to the TRB403 regulation the monitoring of pressure changes in pressure vessels. They have to be calculated according to this regulation, to prevent a more then 10 % exceed of the admissible operating pressure.

Mounting flange 68520 (suitable for all safety valves) plus adapter for thread:

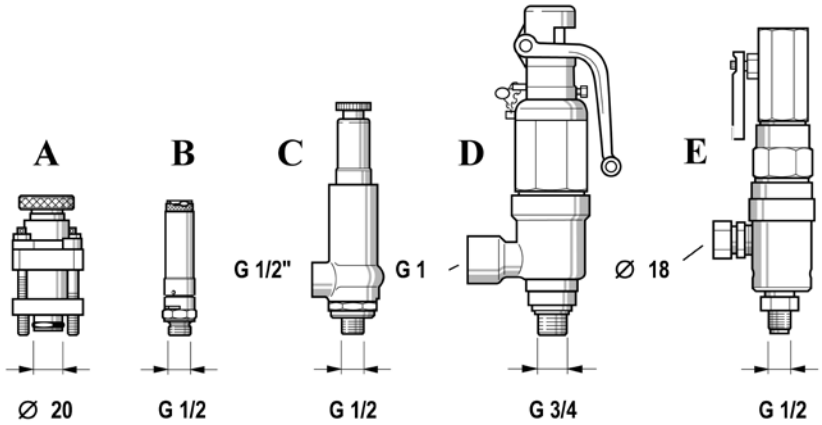

Legend: (A) to (E) = see list on the following page

Designation	Part no.
Adapter 3/8	64013
Adapter 1/2	67797
Adapter 3/4	64118
O ring for Adapter	N4882
Fastening flange for adaptor	64119
Allen screws (4x)	N61

Overview: safety valves

Please specify setting pressure upon order. Necessary adapters and special safety valves on request. We have more types of safety valves.

Please specify setting pressure on order and check if TÜV certification is necessary.

Operating pressure	Size	Blow off volume	Connection	Fig. / design	CE acc. DGRL	Part no.+ press. Ind.
bar	mm	m3/h	on/off		97/23EU	
100-365 100-365	3 5	6 60	G3⁄8 AD20	A – ventable	---- CE	**120541** **059410*(-225)**
8 20 40	10 10 8	250 520 485	G½ G½ G½	B – ventable	CE CE CE	**N19349** **N1671** **N18505**
2,6 – 4.5 4,6 – 7 7,1 – 11 11,1 – 17 17,1 – 25 25,1 – 35 35,1 – 54 54,1 – 68 68,1 – 93 93,1 – 121 121,1 – 180 180,1 – 215 215,1 – 330 330,1 – 370	10 10 10 10 10 10 10 10 10 10 10 6 6 6	105 – 160 160 – 233 233 – 348 348 – 527 527 – 762 762 – 1.056 1.056 – 1.615 1.615 – 2.025 2.025 – 2.764 2.764 – 3.588 3.588 – 5.324 2.760 – 3.294 3.294 – 5.048 5.042 – 5.779	G½ - G½ G½ - G½ G½ - G½ G½ - G½ G½ - G½ G½ - G½ G½ - G½ G½ - G½ G½ - G½ G½ - G½ G½ - G½ G½ - G½ G½ - G½ G½ - G½	C – gas tight ventable	CE CE CE CE CE CE CE CE CE CE CE CE CE CE	**N26256** **N26257** **N26258** **N26259** **N26254** **N26174** **N26175** **N26160** **N26253** **N26252** **N26233** **N27387** **N27394** **N27846**
4,1 – 5.8 20,5 – 31 31,1 – 44 135,1 – 170 175,1 – 200 200,1 – 230 230,1 - 250	15 15 15 15 15 15 15	395 – 537 1.723 – 2.563 2.563 – 3.620 10.998 – 13.728 13.700 – 16.100 7.780 – 8.940 8.940 – 9.720	G¾ - G1 G¾ - G1 G¾ - G1 G¾ - G1 G¾ - G1 G¾ - G1 G¾ - G1	D – gas-tight, ventable	CE CE CE CE CE CE CE	**N26261** **N26262** **N26263** **N26264** **N26265** **N26820** **N26821**
245 – 315 190 – 245 315 – 390 390 – 525	6 6 6 6	1.200 – 1.550 950 – 1.150 1.550 – 1.900 1.900 – 2.200	G½ G½ G½ G½	E – gas-tight, ventable	CE CE CE CE	**N17067** **N17068** **N16778** **N17066**

Ball valves

Shut-off ball valves

Ball valves are know for their easy, straight flow and allow a very high flow rate. The sealings are also suitable for oil free and dry air. The handle shows the ON– OF position and is easy to activate. The handle belongs to the delivery scope.
Temperature of the medium: -20°C to + 100°C.

Repair kits (as shown in the list) are available for leaking valves.

2-way valves

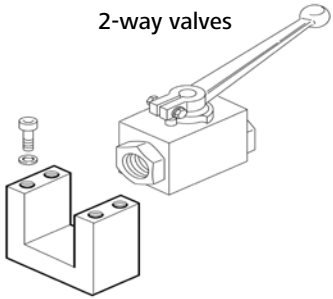

Support for 2-way valve

4-way valves

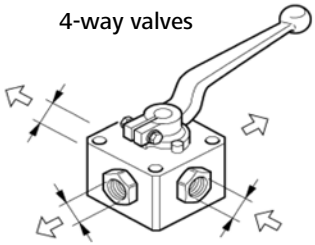

Designation	Connection	DN		L	B	Repair kit	Part no.
		mm	bar	mm	mm		
2-way valve 2-way valve	G 3/8 G ¼	10 6	350 350				**N26450** **N26449**
4-way valve m. X-bore	G 1/8	3	400	55	45	N6452	**N3352**
3-way valve m. L-bore	G ¼	6	400	82	70	N6485	**N3045**
4-way valve m. X-bore	G ¼	6	400	70	55	N6486	**55241**
2-way valve 2-way valve 2-way valve	G ¼ G 3/8 G ½	6 10 12	500 500 500	50 60 75	25 30 35		**N26462** **N26463** **N4027**
Accessories							
Bracket for 2-way valve N2624 (G1/4)							**12546**
Bracket for 2-way valve N4215 (G 3/8)							**69055**

Pressure maintaining valves

Pressure maintaining valves ensure a correct and safe function of the air or gas compressor and of the air and gas processing systems.
They also reduce the dynamic pressure load on the purifying filters.

We recommend to check the pressure maintaining valves every 500 operating hours or at least once a year for correct function. Every 1000 operating hours or every 2 years the inner parts like gaskets, seals, o-rings and pistons have to be replaced.

Please refer to our maintenance kits.

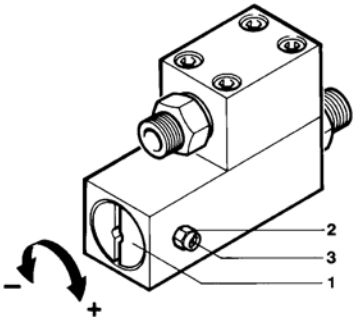

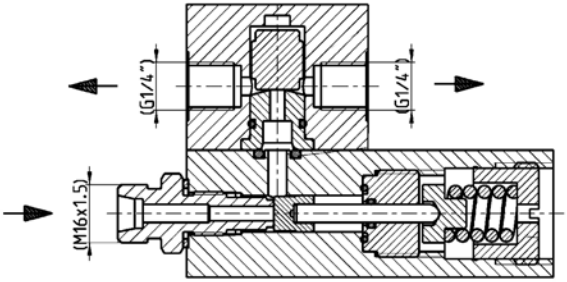

Pressure maintaining valves

The pressure maintaining valves ensure perfect and safe functioning of the air and gas compressor and of the air and gas processing systems. They also reduce the dynamic load on the compressed gas vessels filters.

We recommend to check the pressure maintaining valves for correct function every 500 operating hours or once a year. The inner parts (e.g. gaskets, sleeves, O-rings and pistons) should be replaced every 1000 operating hours or every 2 years.

Please refer to our maintenance kits.

Operating pressure	Adjustment range	Outlet pipe	Notes	Part no.
bar / max.	bar	mm		
150	100	8 mm		**062516**
150	100	8 mm		**071043-KD**
350	240	8 mm		**063838-KD**
350	240	8 mm	AMAG	**065469-KD**
350	240	10 mm	Japan	**068385**
350	240	8 mm		**075330**
350	240	8 mm	oxygen only	**075413-KD**
350	240	8 mm	AMAG	**090062-KD**
350	240		P-Filter	**80751**
350	240		CNG	**81401**
350	240	¼ NPT	NPT	**057351**
350	240		Scuba	**80760**
350	240		Japan	**80804**
350	240			**80815**
400	270	10 mm		**056705**
400	270	12 mm		**060510**
500	340	6 mm	PURE AIR	**071386**
500	340	8 mm		**068275**

› PRESSURE REDUCERS

With BAUER pressure reducers a very high regulation accuracy is reached in the high pressure technique for middle and higher flow volumes due to the pressure relieve valve construction.

Standard Features:

Housing and spring housing are made of Dural or Aluminium bronze, the valve spindle and the valve seat are made of Nirosteel. A knob is used for the stageless pressure setting.

Note:

To ensure your secondary pressure we recommend to install a BAUER safety valve in your piping. You can find product information and part numbers in the chapter 'Safety'. The pressure must be set on the nominal pressure of the user, e.g. a filling panel. To prevent damages caused by particles we recommend to install an adequate particle filter < 20 µm e.g. part no. 060490.

For better understanding:

Primary pressure is the inlet pressure before the pressure reducer. The secondary pressure is the outlet pressure after the pressure reducer. These informations are necessary when you order, to identify the right article.

Pressure reducers

Pressure reducers for mounting in line and on panels. High regulation accuracy. Please specify required primary and secondary pressures as well as part number when ordering. A particle filter must be fitted at the inlet of the pressure reducer. Recommended filter: Particle filter N3635

Technical Data:

- **Medium:** Air, non aggressive gas (N2 + inert gases)
- **Standard Features:** housing and spring housing made of Dural or aluminium bronze, piston rings of aluminium bronze, the valve spindle and valve seat of stainless steel. A knob allows stageless adjusting of the pressure.
- **Temperature range of medium:** -10 °C to +100 °C
- **Connection:** G 3/8 female on primary and secondary side
- **Dimensions:** Height: 200 mm, Diameter: 80 mm

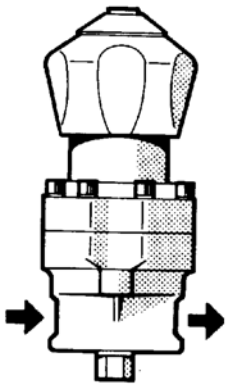

Connection	Primary pressure	Secondary pressure	Flow rate*	Repair kit	Part no.
	bar / max.	bar	m3/min		
G 3/8 G 3/8	250 250	0,1 – 50 0,1 – 105	7,4 14,5	on request on request	**N4795** **N4794**
G 3/8 G 3/8 G 3/8 G 3/8	420 420 420 420	0,1 – 11 0,1 – 50 0,5 – 140 28 – 280	1,6 7 16 32	on request N6487 on request N6292	**N4796** **N4797** **N4798** **N3967**
Optional					
Particle filter					**N17325**
Pressure reducer for breathing air installations					**N21826**

* at max. primary pressure and max. secondary pressure referred to +20° C and 1 bar abs.

Pressure reducers air, gas

Pressure reducers for mounting inline and on panels. High regulation accuracy. When ordering, please specify required primary and secondary pressures as well as part number. Recommended filter: We recommend BAUER particle filter, N3635, which with 20 µm adsorb with high accuracy particles and guarantees the long lifetime of the pressure reducer.

Technical Data:

- **Medium:** Air, gas
- **Standard features:** Housing and spring casing made of aluminium alloy, piston of aluminium bronze, membrane of metal.
- **Relief valve, valve seat:** soft plastic (Peek).
  The handwheel type is recommended for stageless pressure adjustment with sealed secondary pressure, available with additional price.
- **Temperature range of medium:** -20 °C to +70 °C
- **Pressure range: Primary pressure:** 465 bar
- **Secondary pressure**: 1,5 to 410 bar
- **Connection:** G 3/8 inner on both sides
- **Dimensions:** Height: 200 mm
- Ø: 70 mm Ø: 90 mm (Hand wheel)

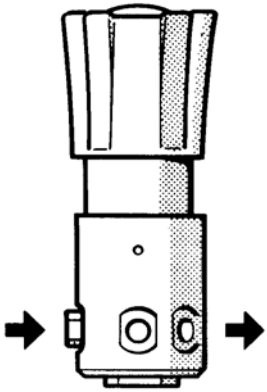

Primary pressure	Secondary pressure	Flow rate *	Repair kit	Part no.
bar / max.	bar	m3/min		
465	1,5 – 52	approx. 7,5	**N24264**	**N15859**
465	34 - 240	approx. 6,1	**N21795**	**N15860**
465	207 – 410	approx. 4,4	**N24265**	**N15861**

* at 420 bar primary pressure and max. secondary pressure referred to +20° C and 1 bar abs

Pressure reducers air

The valve seats are protected by a 20µ particle filter. A knob allows a stageless pressure adjustment. A support is necessary for mounting on a panel. When ordering, please specify required primary and secondary pressures as well as part number.

Technical Data:

- **Medium:** Air
- **Standard features:** housing of nodized aluminium, Valve seat made of bronze and stainless steel. Viton sealings.
- **Temperature range of medium:**-10 °C to +100 °C
- **Pressure range:** Primary pressure: Max. 420 bar
- **Secondary pressure:** 0,1 to 350 bar
- **Flow rate:** 155 Nm3/h, 420 bar
- **Connection**: 2x 1/4 NPT on both primary- and secondary side
- **Dimension:** Height: 140 mm Diameter: 57 mm

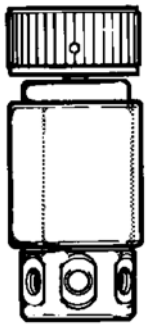

Designation	Flow rate*	Part no.
	m³/h	
Pressure reducer	155	**N21826**
Support for pressure reducer		**74039**
Repair kit for pressure reducer		**N23086**

Optional: Designation	Quantity	Pipe diam.	Connec-tion	Part no.
Straight male connector	2	6 S	¼NPT	**N20264**
Screw cap	2	6 S		**N3610**
Cutting ring	2	6 S		**N3663**
Straight male connector	2	8 S	¼ NPT	**N20266**
Screw cap	2	8 S		**N3608**
Cutting ring	2	8 S		**N3609**
Plug	2		¼ NPT	**N4472**

Membrane pressure reducers

Pressure reducers for mounting in line and on panels. High regulation accuracy and knob for stageless pressure adjustment. Recommended filter: Particle filter N3635. When ordering, please specify required primary and secondary pressures as well as part number.

Technical Data:

- **Medium:** Air, gases
- Standard features: housing of Duralaluminium, aluminium spring casing, valve seat and cone of stainless steel with Teflon sealings, membrane of Dural / Perbunan
- **Temperature range of medium:** -10 °C to +100 °C
- **Connection:** G 3/4 female primary and secondary side
- **Dimensions:** Height: 200 mm diam. 83 mm
- **Weight:** approx. 1,8 kg

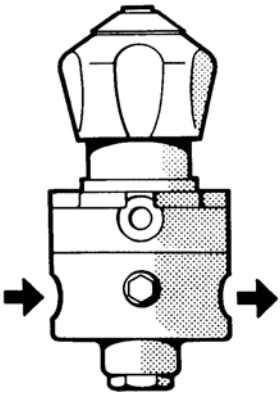

Primary pressure	Secondary pressure	Flow rate*	Repair kits	Part no.
bar / max.	bar	m³/min		
25	0,1 – 1	0,75		**N22531**
42	0,1- 1			**N23296 (CNG)**
42	0,3 – 5	3,5		**N17612**
42	0,5 – 11	6,0		**Auf Anfrage**
42	0,5 – 25	14,0		**N21940**
42	10 – 31	11,0		**N21106**
60	0,1 – 1	1,0	N6291	**N3632**

Dome pressure reducer

Direct acting dome pressure reducer for inline mounting. Soft skin gasket – therefore tight closing at zero flow rate. Recommended filter: N4817 for PN420. We recommend the BAUER particle filter N4817, which with his 20 µm reliably adsorbs particles and guarantees a long life of the pressure reducer.

When ordering, please specify required primary and secondary pressures as well as part number.

Technical Data:

- **Medium:** Air, gases
- **Design:** Housing and dome made of forged aluminium bronze, valve spindle and valve seat made of stainless steel
- **Ambient temperature:** + 5° C to + 45 ° C
- **Temperature range of medium:** -20 °C to +100 °C, in special version up to -50 °C

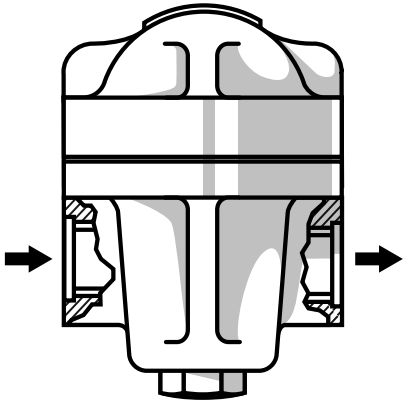

Primary pressure	Secondary pressure	Flow rate*	Height	Diameter	Thread	Repair kits	Part no.
bar / max.	bar	m^3/min	mm	mm	inches		
315	0,1 – 175	612	260	260	G 2	**N6295**	**N4802**
420	0,1 – 280	160	160	120	G 1	**N6294**	**N25191**

* at max. secondary pressure referred to +20° C and 1 bar abs.

Pipes, clamps and hoses

To prevent corrosion inside the high pressure system, we recommend to install only stainless steel pipes.

Technical Data:

- **Quality:** Precision stainless steel piping with wall thickness tolerance class T 1, Acc. DIN2462; material-No. 1.4541
- **Standard length:** approx. 3m, on request also 6m long, where a minimum of 15 pipes must be ordered.

Please observe:

- The pressure ratings are calculated acc. to DIN2413 for an ambient temperature of 20°C.
- At higher temperatures only a reduced pressure is admissible, which can be calculated using a calculation factor.
- Material reference K = 235 N/mm^2
- Security value S 1,5
- **Example:** 50°C : Factor 0,945 or 100°C : Factor 0,885
- For an exact calculation see DIN17440.
- **Flow velocity:** a good approximate value 6-15 m/s

Precision stainless steel pipe

Precision stainless steel pipes

Working pressure*	Pipe outer Ø x wall-thickness	Part no.
bar / max.	mm	
120	42 x 2,0	**N17878**
135	28 x 1,5	**N15836**
140	18 x 1,0	**N15934**
165	15 x 1,0	**N15130**
170	22 x 1,5	**N15466**
180	28 x 2,0	**N18278**
205	18 x 1,5 15 x 1,5 12 x 1,0 10 x 1,0	**N15467** **N3622** **N15098** **N3620**
220	22 x 2,0	**N16255**
297	20 x 2,5 16 x 2,0 12 x 1,5 8 x 1,0	**N20942** **N15504** **N3621** **N3618**
345	20 x 3,0	**N23672**
345	20 x 3,0	**N4699**
385	12 x 2,0 6 x 1,0	**N16242** **N3616**
425	8 x 1,5	**N3619**
450	10 x 2,0	**N17973**
540	6 x 1,5 8 x 2,0 12 x 3,0	**N3617** **N18356** **N17118**

* Please note pressure correction regarding temperature. You can find an example in the description.

Pipe Clamps

These parts are mounting components for the pipes to be laid.
The following models are to be used.

Recommended distance between clamps on stable surfaces:

Designation	Distance between clamps
Pipe Ø 6-12 mm	0,9 m
Pipe Ø 15-22 mm	1,2 m

Recommended distance between clamps on vibrating surfaces:

Designation	Distance between clamps
Pipe Ø 6-12 mm	0,45 m
Pipe Ø 15-22 mm	0,6 m

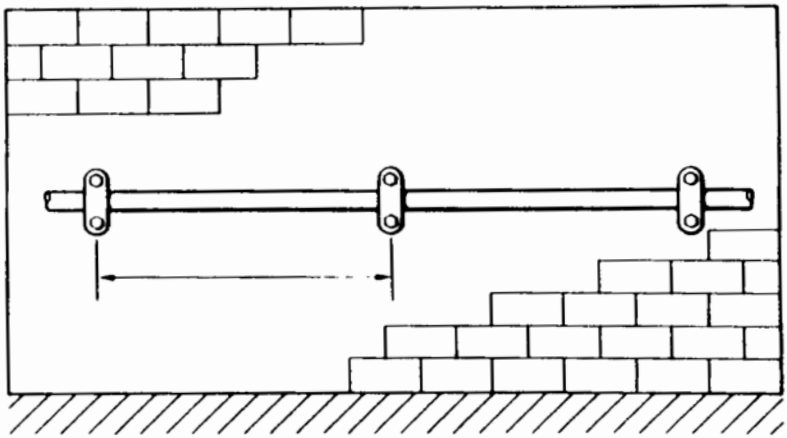

Clamp distance

Plastic clamps

To fasten single tubes: for temperatures below 60 °C.

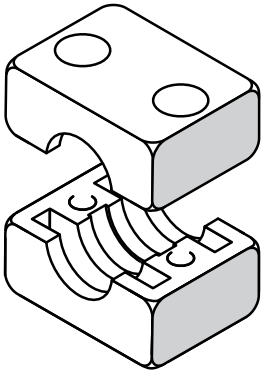

Designation	Part no.*
Plastic clamp for pipe Ø 6 mm	**N27858**
Plastic clamp for pipe Ø 8 mm	**N17270**
Plastic clamp for pipe Ø 10 mm	**N17271**
Plastic clamp for pipe Ø 12 mm	**N17272**
Plastic clamp for pipe Ø 15 mm	**N15075**
Plastic clamp for pipe Ø 16 mm	**N17577**
Plastic clamp for pipe Ø 18 mm	**N17273**
Plastic clamp for pipe Ø 20 mm	**N17274**
Plastic clamp for pipe Ø 22 mm	**N17275**
Plastic clamp for pipe Ø 28 mm	**N23679**
Mounting rail / C-rail	**N23614**
Rail nut (M6)	**N23613**
Screw M6 x 30 mm for N17269/N17270/N17271/N17272	**N19536**
Screw M6 x 35 mm for N15075/N17577/N17273	**N19537**
Screw M6 x 40 mm for N17274/N17275	**N19538**
Screw M6 x 45 mm for N23679	**N19539**

* two clamps are required

ALUMINIUM CLAMPS

to fasten 2 pipes

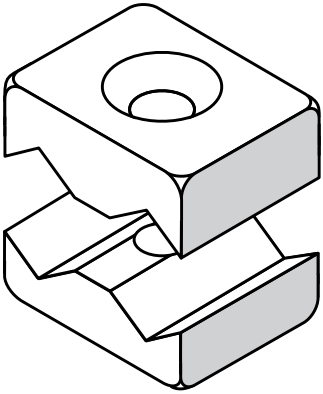

Designation	Part no.*
Pipe outer Ø 6-10 mm	13967

to fasten 3 pipes

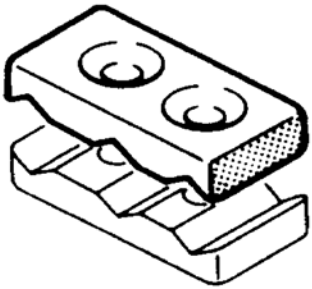

Designation	Part no.*
Pipe outer Ø 6 - 10 mm	55579

*two clamps are required

Aluminium clamps

To fasten 4 pipes:

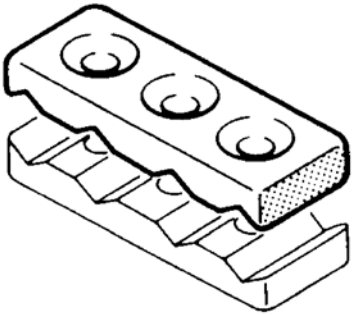

Designation	Part no.*
Pipe outer Ø 6 - 10 mm	55589

Dowels for wall mounting

Designation	Part no.
Dowel Ø 14, L 75	N17056
Dowel Ø 8, L 40	N24654
Dowel Ø 12, L 60	N24339
Dowel Ø 6, L 30	N24430
Dowel Ø 10, L 50	N3766

Hoses

CAUTION: Max. working pressure

Hoses can be ordered for various pressure ranges, as well as with different connections.

Please remember that the max. permissible operating pressure depends on the component with the lowest pressure range.

Please observe the listed application data!

Temperature range: -10 °C / 14° F to +50°C / 122° F
Ambient temperature: +60° C / 140 °F short term up to +80°C / 176 °F allowed
Flow velocity: max. 10 m/s. standard values see chapter Lists

CAUTION:

Continuous pressure and continuous load change in the hoses considerably shortens their lifetime. It is not recommended to use them for this kind of application.
The use of hoses has to follow the regulations of the respective state or country.

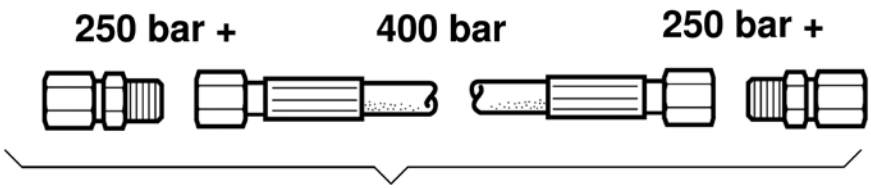

Maximum 250 bar, allowed maximum working pressure!

Filling hoses

Bauer high pressure hoses – connecting hoses are especially designed for breathing air application. They are flexible and fitted with hose protection and a handle on the end of the pressure gauge as well as fittings of stainless steel. All hoses and fittings are 100% pressure tested, have a 20.000 cycle test and the corresponding approval.
BAUER Kompressoren filling hoses feature a very high certified temperature range. Optionally they are available with pressure test certificate 10204-3.1B.

Technical Data:

- **Outer dia.:** 13,3 mm
- **Outer layer:** pricked
- **Suitable for:** air, helium, nitrogen, natural gas, inert gas
- **Resistant against:** salty air, salt water, sun and fuels like petrol, Diesel
- **Material:** Fluoropolymer (FEP)
- **Temperature:** -40° C to +100° C
- **Length:** see list
- **Colour:** black
- **Allowed working pressure:** 425 bar

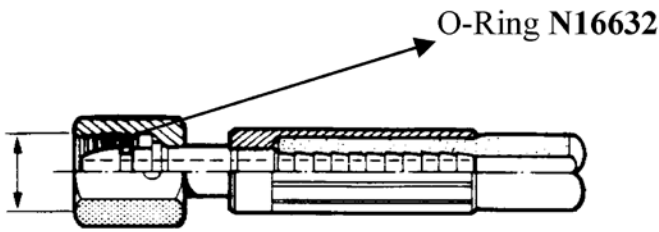

Unimam connector

Filling hoses with Unimam connector, swivelling non-pressurized

Lenght	Operating pressure	Connection	DN	Part no.
mm	bar / max.		mm	
500	425	M 16 X 1,5	5	**N4216**
630	425	M 16 X 1,5	5	**N 90018**
1.000	425	M 16 X 1,5	5	**N2817**
1.500	425	M 16 X 1,5	5	**N3351**
2.000	425	M 16 X 1,5	5	**N2818**
3.000	425	M 16 X 1,5	5	**N2819**
5.000	425	M 16 X 1,5	5	**N18397**
6.000	425	M 16 X 1,5	5	**N3657**
9.000	425	M 16 X 1,5	5	**N20724**
10.000	425	M 16 X 1,5	5	**N24614**
12.000	425	M 16 X 1,5	5	**N21707**
15.000	425	M 16 X 1,5	5	**N22730**
20.000	425	M 16 X 1,5	5	**N23084**
25.000	425	M 16 X 1,5	5	**N23146**
30.000	425	M 16 X 1,5	5	**N23147**
50.000	425	M 16 X 1,5	5	**N23396**

High pressure hoses

Lenght	Operating pressure	Connection thread	DN	Screw cap	Part no.
mm	bar / max.		mm		
320	315	M 12x1,5	4	6L/6L	**N20743**
500	315	M 12x1,5	4	6L/6L	**N3253**
800	315	M 12x1,5	4	6L/6L	**N20744**
320	315	M 14x1,5; M 12x1,5	4	6S/6L	**N20745**
500	315	M 14x1,5; M12x1,5	4	6S/6L	**N18319**
800	315	M 14x1,5; M12x1,5	4	6S/6L	**N18321**
320	450	M 14x1,5	4	6S/6S	**N18323**
500	450	M 14x1,5	4	6S/6S	**N18320**
800	450	M 14x1,5	4	6S/6S	**N18322**
100	450	M 14x1,5	4	6S/6S	**N4822**
500	450	M 16x1,5	6	8S/8S	**N3864**
500			6	8L/8L	**N19347**

O-Ring for			6L-6S	**N20755**
O-Ring for			8L-8S	**N20756**
O-Ring for	M 16x1,5			**N16632**

Legend: L = light range, S = heavy range

Pipe fittings

We use cutting ring fittings from worldknown manufacturers. We use these fittings for an outer diameter of pipes from 6 – 42 mm. The pipe diameters are used for different pressures and flow rates. See also the following lists for different fittings.

Quality features:

Pipe fittings, nuts and cuttings rings are normally supplied in steel. All fittings are protected against corrosion by a thin phosphate coating. Available in galvanized or stainless steel at additional price. When ordering, please state desired type. The fittings are made according to the current DIN standards.

Mounting:

Cut the pipe at a right angle, de-burr and clean the pipe ends. Fit screw cap and cutting ring on the pipe, press the pipe against the fitting and tighten the screw cap until the cutting ring grips the pipe. Use for this the indicated torque and the legal tool according to the type of fitting. Then tighten the screw cap by one more turn. Check the cutting of the ring.

CAUTION: If the above procedure is not observed, the nominal pressure and the lifetime of the connection can be reduced. The pipe may slip out of the connector.

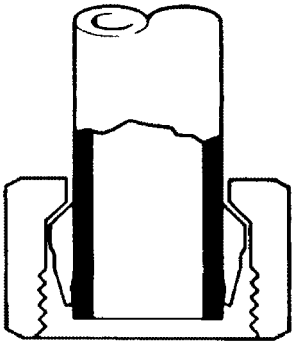

Cutting ring fittings

List of the most common pipe fittings

Straight male connector (GES)

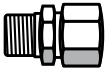

Angle male connector (WES)

Male T-connector (TES

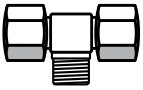

Male L-connector (LES)

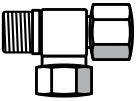

Straight connector (GS)

Angle connector (WS)

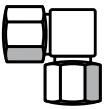

T-connector (TS)

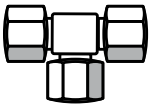

Cross connector (KV)

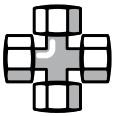

Straigth bulkhead connector (GSS)

Angle bulhkead connector (WSS)

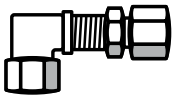

Welded male connector (ASS)

Welded bulkhead connector (ESS)

Adjustable L-connector (ELS)

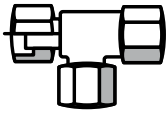

Adjustable T-connector (ETS)

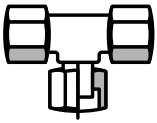

Adjustable angle connector (EWS)

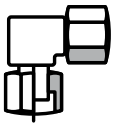

Adjustable straight connector (EGES)

Reducing connector (RED)

Straight pipe fitting (GS) standard type

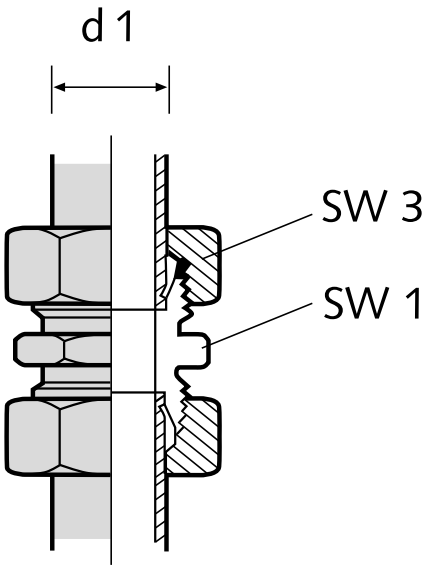

PN	Pipe outer Ø d1	SW1	SW3	Part no.
bar	mm	mm	mm	
100	28	41	41	**N22487**
160 160	18 22	27 32	32 36	**N20312** **N20313**
250 250 250 250 250	6 8 10 12 15	12 14 17 19 24	14 17 19 22 27	**N20157** **N20379** **N20309** **N20310** **N20311**
400 400	16 20	27 32	30 36	**N20347** **N20348**
630 630 630 630	6 8 10 12	14 17 19 22	17 19 22 24	**N20168** **N20208** **N20190** **N20101**

Straight pipe fittings (GS) stainless steel type

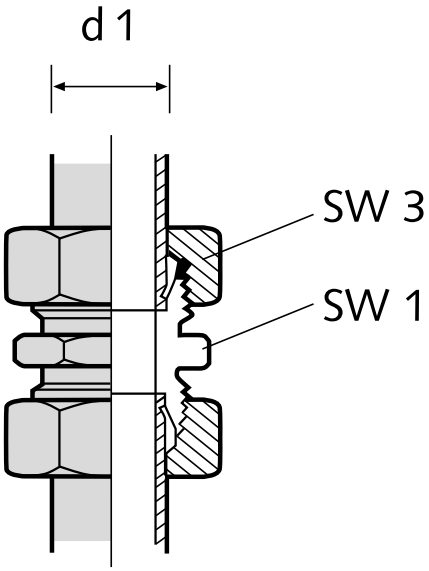

PN	Pipe outer Ø d1	SW1	SW3	Part no.
bar	mm	mm	mm	
40	20	32	36	N24424
100	28	41	41	N23640
160 160	18 22	27 32	32 36	N20433 N20426
250 250 250 250	6 10 12 15	12 17 19 24	14 19 22 27	N20442 N20584 N20140 N20436
630 630 630 630	6 8 10 12	14 17 19 22	17 19 22 24	N20499 N20585 N23394 N23387

Straight male connectors (GES)

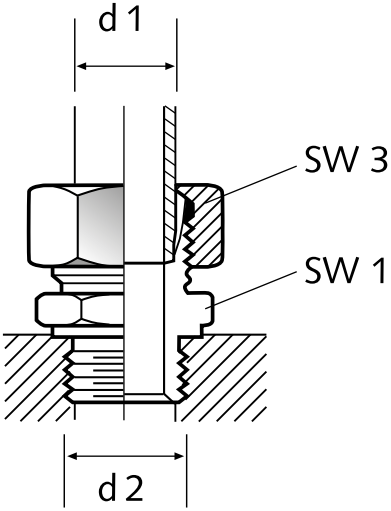

PN	Pipe outer Ø d1	d2	SW1	SW3	Part no. for Connector with integrated soft seal	Part no. for Connector without seaalin
bar	mm		mm	mm		
100	28	G 1	41	41	N20030	N20308
160 160	18 22	G ½ G ¾	27 32	32 36	N20075 N20098	N20013 N20230
250 250 250 250 250	6 8 10 12 15	G 1/8 G ¼ G ¼ G 3/8 G ½	19 19 19 22 27	14 17 19 22 27	N20237 N20065 N20017 N20043 N20018	N2002 N20014 N20188 N20009 N20231
400 400	16 20	G ½ G ¾	27 32	30 36	N20224 N20032	N18244 N20351
630 630 630 630 630	6 8 8 10 12	G ¼ G ¼ G 3/8 G 3/8 G 3/8	19 19 19 22 22	19 19 19 22 24	N20211 N20287 N20404 N20228 N20721	N20195 N20209 N20551 N20229 N20011

Straight bulkhead screw connectors (GSV)

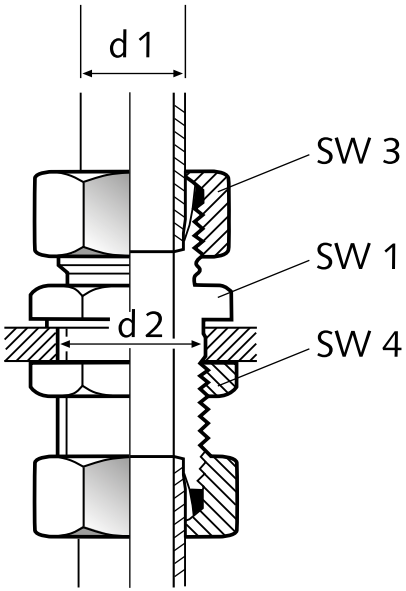

PN	Pipe outer Ø d1	d4	SW1	SW3	SW4	Part no.
bar	mm	mm	mm	mm	mm	
160 160	18 22	28 32	32 36	32 36	36 41	**N15537** **N4582**
250 250 250 250 250	6 8 10 12 15	14 16 18 20 24	17 19 22 24 27	14 17 19 22 27	17 19 22 24 30	**N3995** **N3172** **N4659** **N4338** **N4619**
400 400	16 20	26 32	32 41	30 36	32 41	**N15505** **N15854**
630 630 630 630 630	6 8 10 12	16 18 20 22	19 22 24 27	17 19 22 24	19 22 24 27	**N3083** **N3300** **N4168** **N4683**

Angle bulkhead screw connectors (WSV)

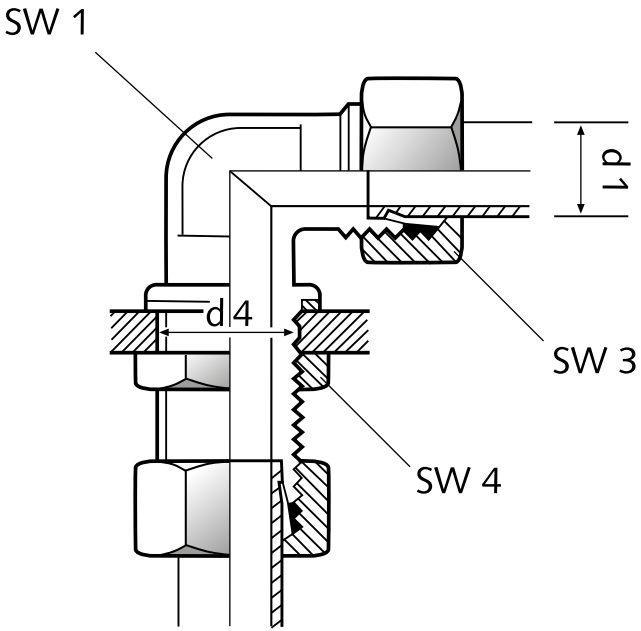

PN	Pipe outer Ø d1	d4	SW1	SW3	SW4	Part no.
bar	mm	mm	mm	mm	mm	
160 160	18 22	28 32	24 27	32 36	36 41	**N18147** **N18155**
250 250 250 250	8 10 12 15	16 18 20 24	12 14 17 19	17 19 22 27	19 22 24 30	**N2787** **N15202** **N16271** **N3171**
400 400	16 20	26 32	24 27	30 36	32 41	**N18148** **N4932**
630 630 630 630	6 8 10 12	16 18 20 22	12 14 17 17	17 19 22 24	19 22 24 27	**N4477** **N4322** **N4658** **N4684**

Angle male connectors (WEV)

Thread: Whitworth, conic

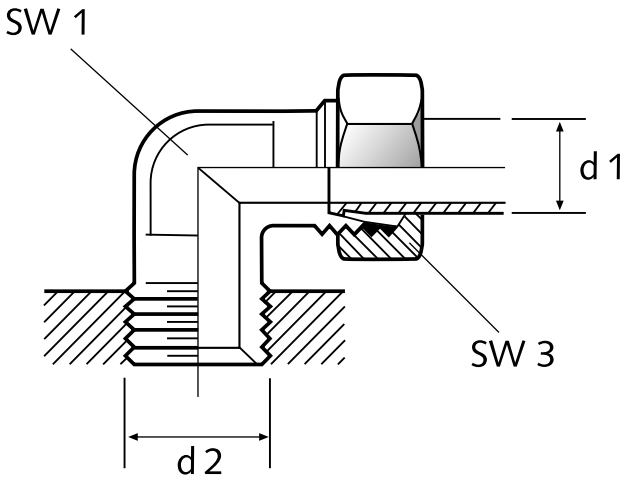

PN	Pipe outer Ø d1	d4	SW1	SW3	Part no.
bar	mm		mm	mm	
160	18	G ½	24	32	**N 661**
160	22	G ¾	27	36	**N 7403**
250	6	G 1/8	12	14	**N 1057**
250	8	G ¼	14	17	**N 1536**
250	10	G ¼	17	19	**N 1065**
250	12	G 3/8	19	22	**N 2917**
250	15	G ½	19	27	**N 1856**
400	16	G ½	24	30	**N 8011**
400	20	G 3/8	27	36	**N 8026**
630	6	G ¼	14	17	**N 1048**
630	8	G ¼	17	19	**N 3044**
630	10	G 3/8	19	22	**N 7727**
630	12	G 3/8	22	24	**N 4681**

› ADJUSTABLE ANGLE SCREW CONNECTORS (EEWS)

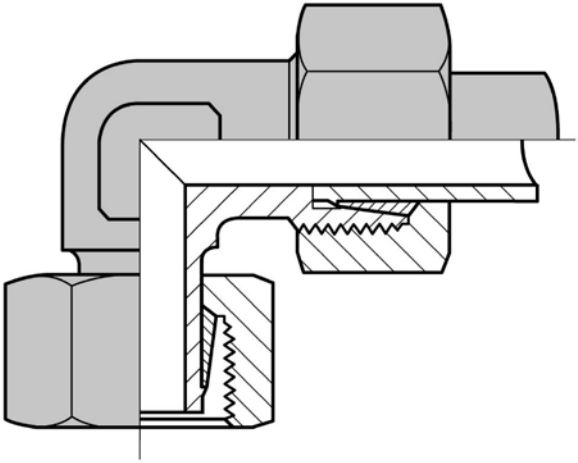

PN	Pipe outer Ø d1	Serie	Part no.
bar	mm		
250	6	L	**N20186**
250	8	L	**N20152**
250	10	L	**N20160**
250	12	L	**N20200**
250	15	L	**N20257**
400	16	S	**N20225**
400	20	S	**N20031**
630	6	S	**N20187**
630	8	S	**83220**
630	10	S	**N20154**
630	12	S	**N20282**

T-Connectors (TV)

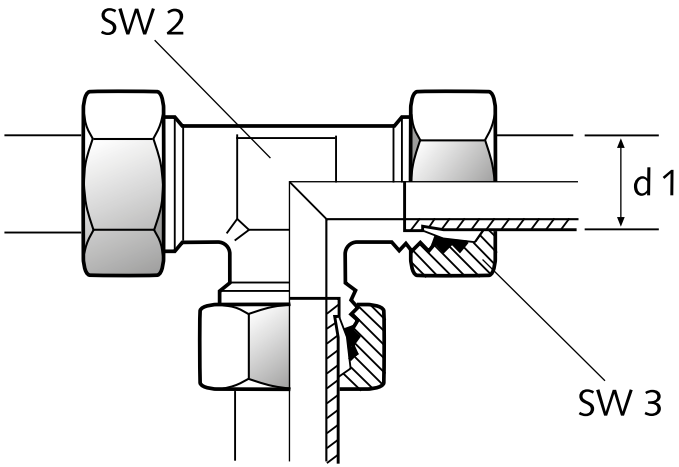

PN	Pipe outer Ø d1	SW2	SW3	Part no.
bar	mm	mm	mm	
100	28	36	41	N 7513
160 160	18 22	24 27	32 36	N7428 N7429
250 250 250 250 250	6 8 10 12 15	12 14 17 19 19	14 17 19 22 27	N3134 N3025 N3010 N7426 N7427
400 400	16 20	24 27	30 36	N 8022 N18149
630 630 630 630	6 8 10 12	14 17 19 22	17 19 22 24	N3968 N3710 N4922 N17924

› ADJUSTABLE T-CONNECTORS (EETS)

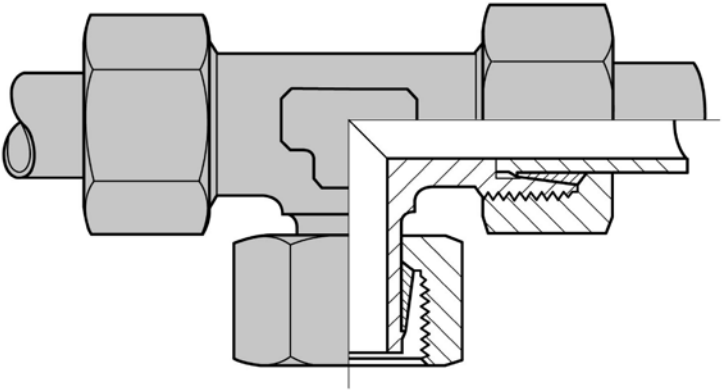

PN	Pipe outer Ø d1	Serie	Part no.
bar	mm		
250	6	L	**N20238**
250	8	L	**N20155**
250	10	L	**N20068**
250	12	L	**N20051**
250	15	L	**N20029**
400	16	S	**N20419**
400	20	S	**N20259**
630	6	S	**N20019**
630	8	S	**N20206**
630	10	S	**N20064**
630	12	S	**N20057**

› ADJUSTABLE L-CONNECTORS (EELS)

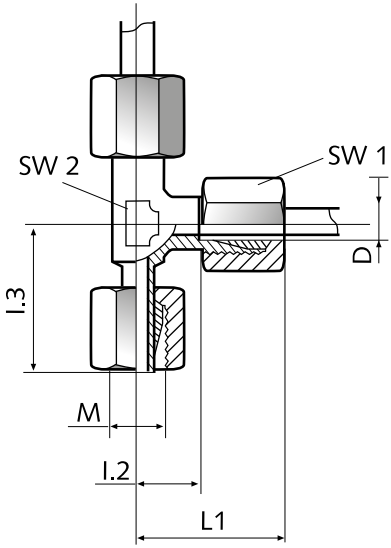

PN	Pipe outer Ø d1	Serie	Part no.
bar	mm		
250	6	L	**N20167**
250	8	L	**N20219**
250	10	L	**N20213**
250	12	L	**N20289**
250	15	L	**N20052**
400	16	S	**N20422**
400	20	S	**N23503**
630	6	S	**N20185**
630	8	S	**N20175**
630	10	S	**N20276**
630	12	S	**N20055**

Cutting rings

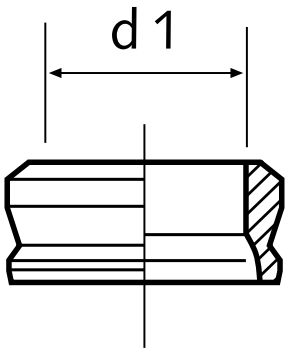

PN	Pipe outer Ø d1	Serie	Part no.
bar	mm		
100	28	L	**N7445**
160 160	18 22	L L	**N7443** **N7444**
250 250 250 250 250	6 8 10 12 15	L L L L L	**N3663** **N3609** **N4011** **N7441** **N3614**
400 400	16 20	S S	**N4009** **N18154**
630 630 630 630	6 8 10 12	S S S S	**N3663** **N3609** **N4011** **N7441**

Screw caps

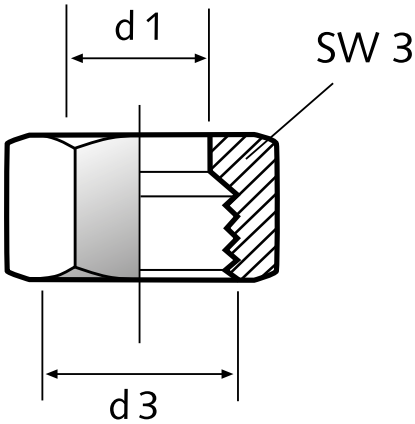

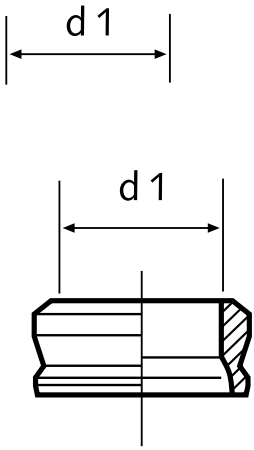

PN	Pipe outer Ø d1	d3	SW3	Serie	Part no.
bar	mm		mm		
100	28	M 36 x 2	41	L	**N7437**
160 160	18 22	M 26 x 1,5 M 30 x 2	32 36	L L	**N7435** **N7436**
250 250 250 250 250	6 8 10 12 15	M 12 x 1,5 M 14 x 1,5 M 16 x 1,5 M 18 x 1,5 M 22 x 1,5	14 17 19 22 27	L L L L L	**N7430** **N1049** **N7432** **N7433** **N3613**
400 400	16 20	M 24 x 1,5 M 30 x 2	30 36	S S	**N4008** **N18153**
630 630 630 630	6 8 10 12	M 14 x 1,5 M 16 x 1,5 M 18 x 1,5 M 20 x 1,5	17 19 22 24	S S S S	**N3610** **N3608** **N4010** **N15599**

Straight male connectors (GEV)

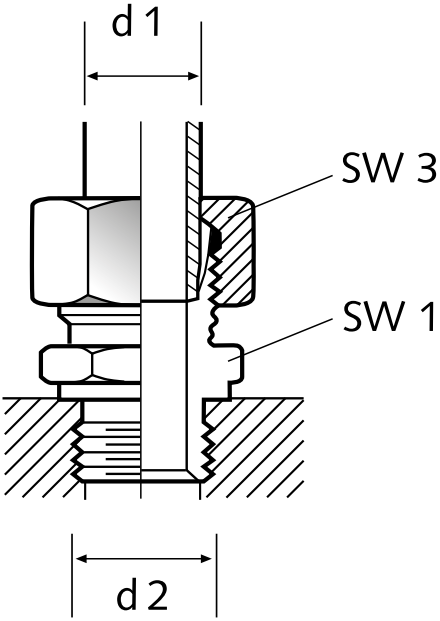

PN	Pipe outer Ø d1	d2	SW1	SW3	Part no.
bar	mm		mm	mm	
250 250 250 250 250	6 8 10 12 15	G 1⁄8 G ¼ G ¼ G 3⁄8 G ½	14 14 17 19 24	14 17 19 22 27	**N 1051** **N1063** **N2166** **N1443** **N1509**
630 630 630 630	6 8 10 12	G 1⁄4 G 1⁄4 G 3⁄8 G ½	19 19 22 27	17 19 22 24	**N 902** **N2466** **N3983** **N4022**

Straight male connectors (eGES)

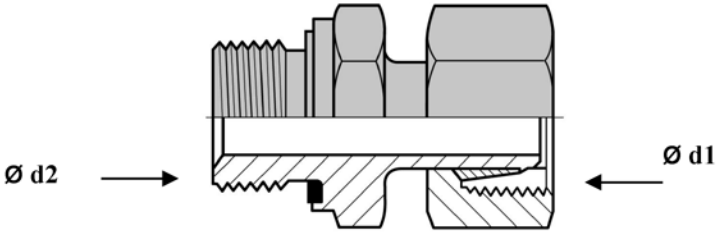

PN	Pipe outer Ø d1	Ø d1	Serie	Part no.
bar	mm	mm		
250	8	G ¼	L	**N17233**
250	10	G ¼	L	**N15128**
250	12	G 3⁄8	L	**N17252**
400	16	G ½	S	**N4977**
400	20	G ¾	S	**N4318**
630	6	G ¼	S	**N4498**
630	8	G ¼	S	**N15600**
630	10	G 3⁄8	S	**N15501**
630	12	G 3⁄8	S	**N15922**

REDUCTION ADAPTORS (ERED)

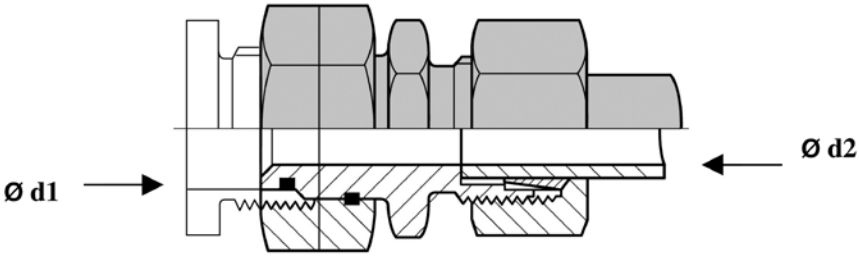

PN	Pipe outer Ø d1	Pipe outer Ø d2	Serie	Part no.
bar	mm	mm		
250	8	6	L	**N20234**
250	10	8	L	**N20067**
250	12	8	L	**N20112**
250	12	10	L	**N20396**
400	20	16	S	**N23118**
400	16	12	S	**N20071**
630	8	6	S	**N20184**
630	10	8	S	**N20069**
630	12	8	S	**N20286**
630	12	10	S	**N20244**

Angle screw connectors (WV)

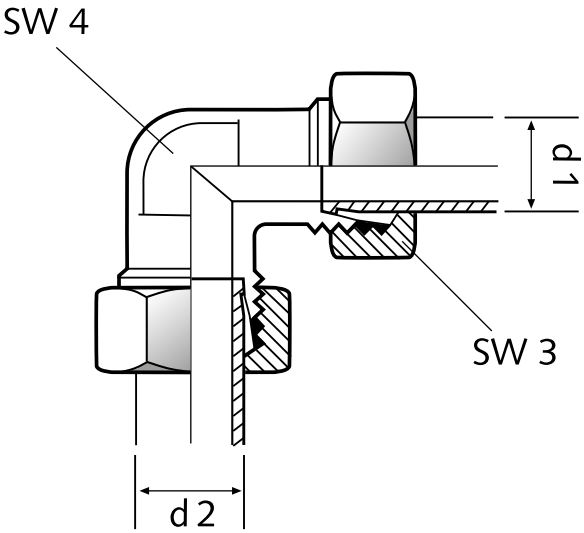

PN	Pipe outer Ø d1	SW4	SW3	Part no.
bar	mm	mm	mm	
160 160	18 22	24 27	32 36	N17646 N4843
250 250 250 250 250	6 8 10 12 15	12 14 17 19 19	14 17 19 22 27	N7405 N18643 N18635 N18150 N 9227
400 400	16 20	24 27	30 36	N15511 N18152
630 630 630 630	6 8 10 12	14 17 19 22	17 19 22 24	N3012 N3946 N 7728 N18151

Male L connectors (LEV)

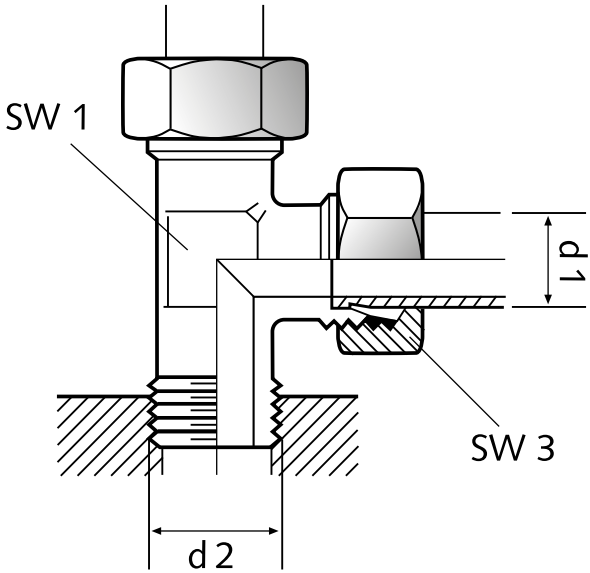

PN	Pipe outer Ø d1	d2	SW1	SW3	Part no.
bar	mm		mm	mm	
160 160	18 22	G ½ G ¾	24 27	32 36	**N7415** **N15015**
250 250 250 250 250	6 8 10 12 15	G 1⁄8 G ¼ G ¼ G 3⁄8 G ½	12 14 17 19 19	14 17 19 22 27	**N7410** **N2902** **N7412** **N7413** **N7414**
400 400	16 20	G ½ G ¾	24 27	30 36	**N4023** **N18156**
630 630 630 630	6 8 10 12	G ¼ G ¼ G 3⁄8 G 3⁄8	14 17 19 22	17 19 22 24	**N2903** **N3069** **N3142** **N3985**

› Male T connectors (TEV)

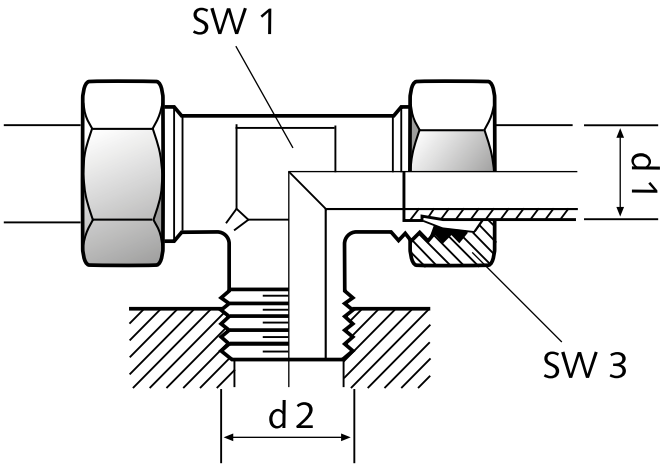

PN	Pipe outer Ø d1	d2	SW1	SW3	Part no.
bar	mm		mm	mm	
160 160	18 22	G ½ G ¾	24 27	32 36	N18564 N7422
250 **250** **250** **250** **250**	6 8 10 12 15	G 1⁄8 G ¼ G ¼ G 3⁄8 G ½	12 14 17 19 19	14 17 19 22 27	N1106 N1062 N1064 N3580 N7420
400 400	16 20	G ½ G ¾	24 27	30 36	N 8012 N18157
630 **630** **630** **630**	6 8 10 12	G ¼ G ¼ G 3⁄8 G 3⁄8	14 17 19 22	17 19 22 24	N2157 N3068 N3984 N17945

List of flow rate

Example: with a compressor flow rate of 70 m3/h (= 1,16 m3/min) and a final pressure of 200 bar the inner diameter of a pipe should be a minimum of 3 mm

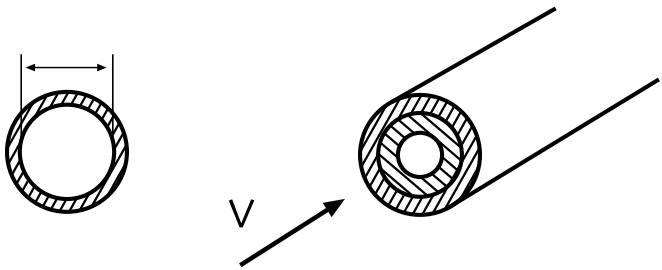

Pipe flow

DN Pipe-Inner Ø	Pressure					
mm	35 bar	64 bar	100 bar	200 bar	300 bar	350 bar
2	0,1	0,2	0,4	0,8	1,2	1,4
3	0,3	0,5	0,8	1,6	2,4	2,8
4	0,5	1,0	1,5	3,0	4,5	5,2
5	0,8	1,5	2,4	4,8	7,2	8,4
6	1,2	2,2	3,4	6,8	10,2	12,0
8	2,1	3,8	6,0	12,0	18,0	21,0
10	3,2	6,0	9,4	18,8	28,2	32,9
12	4,8	8,6	13,6	27,2	40,8	47,6
15	7,4	13,6	21,2	42,4	63,6	74,2

Measurement: m^3/min

List of flow rate for hoses

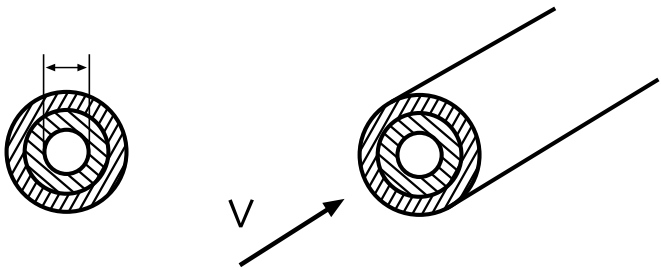

Hose flow

DN Pipe-Inner Ø	Pressure					
mm	35 bar	64 bar	100 bar	200 bar	300 bar	350 bar
2	0,05	0,1	0,2	0,4	0,6	0,7
3	0,15	0,3	0,4	0,8	1,2	1,4
4	0,3	0,5	0,7	1,4	2,1	2,5
5	0,4	0,7	1,2	2,4	3,6	4,2
6	0,6	1,2	1,7	3,4	5,1	6,0
8	1,0	1,7	3,0	6,0	9,0	10,5
10	1,6	3,0	4,7	9,4	14,1	16,5
12	2,4	4,3	13,6	13,6	20,4	23,8
15	3,7	6,8	21,4	21,4	31,8	37,1

Measurement: m^3/min

Transportbox for Junior II

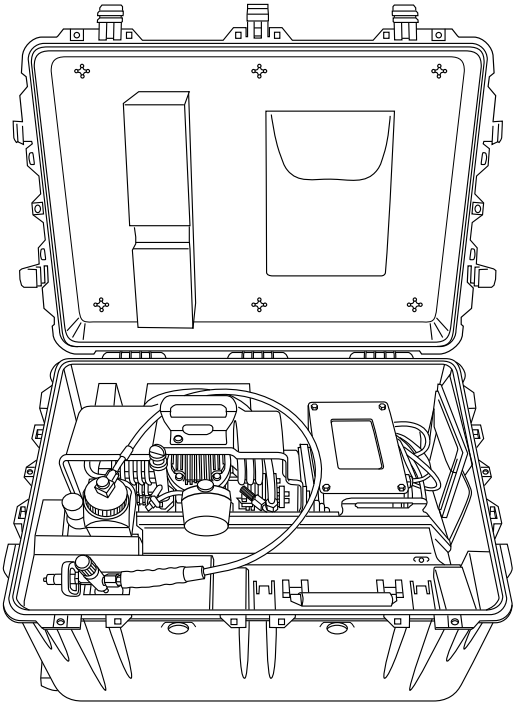

Standard case (without content, black) with:

- 1 foam insert for tool case, filter cartridge and filling connector, fixed
- 1 foam insert to fix the compressor, fixed to the lid
- 1 bag for documents A4, transparent fixed to the lid
- 1 ground plate with positioning aids
- 4 indication adhesives for upright transport at all four sides
- 1 warning adhesive fixed externally on the document bag
- 1 loose hose clamp

WxHxD in cm: 80x58x48
Weight: 19 kg

Designation	Part no.
Transportbox for PE 100	**Transbox**

Trolley

For easy transport, our compressors can be fitted with a trolley.

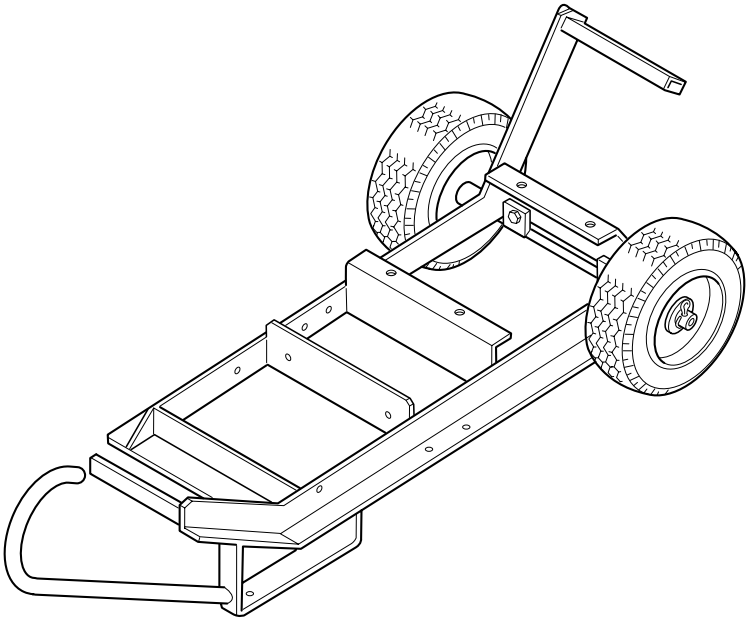

Designation	Part no.
Capitano 140, Mariner 200 / 250	**82439**
Mariner 320	**80775**
Capitano II, Mariner II, Utilus II	**78838**

Centrifugal clutch

To start a compressor with little effort or in case of low ambient temperatures a centrifugal clutch is used. Available for the compressor models Junior and Oceanus.

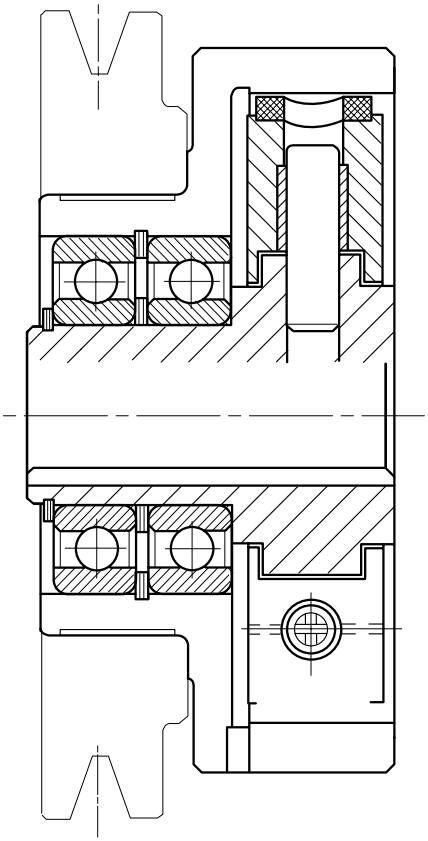

Technical Data:

- **Speed max.:** 3.600 rpm
- **Lock-in speed**: 2.100 rpm
- **Max. torque:** 2 lb/ft
- **Coupling type:** v-belt

Designation	Part no.
Centrifugal clutch	**N26326**
Mounting kit	**79716**

Conversion kits Junior

To change the drive system of a compressor from electric motor to petrol engine or viceversa.

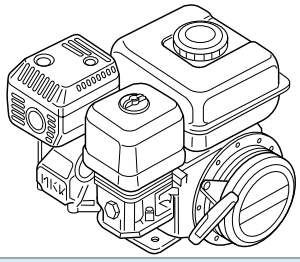

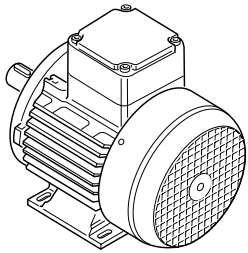

Designation	Part no.
Conversion kit to Junior with petrol engine	075794
Delivery scope	
Petrol engine motor 4 kW	N20703
Motor accessories consisting of V-belt N16620, V-belt pulley 62114, Intake telescope 062080, screw	071622

Conversion kit to Junior with Electric drive 440V / 50Hz	075793-V001
Conversion kit to Junior with Electric drive 440V / 60Hz	075793-V002
Delivery scope	
Electric motor	N3388
Motor accessories consisting of V-belt N16620, V-belt pulley N15001 or 56880, screws	071263
Optional and not included in the conversation kit:	
Motor protection switch 6.0 to 10 A	N22525
Mains cable to 5 kW	059187
Under-voltage switch 440V / 60Hz	N24129
Aux. switch	N18426

Conversion kit to Junior with AC-drive 230V / 50Hz	075793-V003
Conversion kit to Junior with AC-drive 230V / 60Hz	075793-V002
Delivery scope	
Electric motor, motor protection switch and connection cable with plug	N19108
Motor accessories consisting of V-belt N16620, V-belt pulley N15001 or 56880, screws	071263

Conversion kits Utilus

Designation	Part no.
Conversion kit to Utilus with petrol engine	072749
Delivery scope	
Petrol engine motor 4 kW	N20703
Motor accessories consisting of V-belt N2585, V-belt pulley 14403, hinged motor plate, anti-vibration mount, bolts	064717
Intake filter with Intake hose	014539

Conversion kit to Utilus with electric drive 440V / 50Hz	072747-V001
Conversion kit to Utilus with electric drive 440V / 60Hz	072747-V002
Delivery scope	
Electric motor 2.2 kW	N3388
Motor accessories consisting of cover, V-belt N2585, V-belt pulley 14386 or 11832, screws	014714
Cover	14446
Optional and not included in the kit:	
Motor protection switch 6.0 to 10 A	N22525
Connection cable up to 5 kW	059187
Under-voltage release 440V / 60Hz	N24129
Aux. switch	N18426

Conversion kit to Utilus with AC drive 230V / 50Hz	072748-V001
Conversion kit to Utilus with AC drive 230V / 60Hz	072748-V002
Delivery scope	
Electric motor, Motor protection switch and connection cable with plug	N19108
Motor accessories consisting of V-belt N2585, V-belt pulley 14386 or 11832, screws	014714
Cover	14446

Conversion kits Capitano

Designation	Part no.
Conversion kit to Capitano with petrol engine	**072751**
Delivery scope	
Petrole engine motor 4 kW	**N20703**
Motor accessories consisting of V-belt N3185, V-belt pulley 14300 , rocker, shock absorber, screws	**064718**
Intake filter with Intake hose	**014539**

Conversion kit to Capitano with electric drive 440V / 50Hz	**072750-V001**
Conversion kit to Capitano with electric drive 440V / 60Hz	**072750-V002**
Delivery scope	
Three-phase electric motor 3 kW	**N2774**
Motor accessories consisting of V-belt N2585, V-belt pulley 14386 or 11832, screws	**014359**
Cover	**14446**
Optional and not included in the kit:	
Motor protection switch 6.0 to 10 A	**N22525**
Mains cable up to 5kW	**059187**
Under-voltage release 440V / 60Hz	**N24129**
Aux. switch	**N18426**

Conversion kits Junior II

Designation	Part no.
Conversion kit to Junior II with petrol engine	**79191-JII-B**
Delivery scope	
Petrol engine motor 4 kW	**N20703**
Motor accessories consisting of V-belt N15426, V-belt pulley 62114, screws	**077236**
Intake telescope	**077323**

Conversion kit to Junior II with electric drive 440V / 50-60Hz	**79191-JII-E**
Delivery scope	
Electric motor 2.2 kW	**N3388**
Motor accessories consisting of V-belt N15426, V-belt pulley 62114, screws	**077236**
Motor protection switch	**077956**
Connection cable	**077240**

Conversion kit to Junior II with AC drive 230V / 50-60Hz	**79191-JII-W**
Delivery scope	
Electric motor 230V, Motor protection switch and connection cable with plug	**N19108**
Motor accessories consisting of V-belt N24960, V-belt pulley N15001 or 56880, screws	**077237**
Optional and not included in the kit:	
Electric motor 110V / 50Hz / 2.2kW	**N19111**
Electric motor 110V / 60Hz / 2.2kW	**N19112**
Electric motor 230V / 60Hz / 2.2kW	**N19110**
Aux. switch	**N18426**

Conversion kits Ultilus II

Designation	Part no.
Conversion kit to Utilus II with petrol engine	**79191-UII-B**
Delivery scope	
Petrol engine motor 4 kW	**N20703**
Motor accessories for carrying frame consisting of V-belt N2594, V-belt pulley N25707, rocker, screws	**78862**
Intake filter with Intake hose	**014539**
Optional and not included in the kit:	
Motor accessories for crash frame consisting of V-belt N2597, V-belt pulley N25707, rocker, screws	**78863**

Conversion kit to Utilus II with Electric drive 440V / 50Hz	**79191-UII-E**
Delivery scope	
Three-phase electric motor 2.2 kW	**N3388**
Motor accessories for carrying frame consisting of V-belt N2594 or N2403, V-belt pulley N17847 or N17848, rocker, screws	**78859**
Optional and not included in the kit:	
Motor accessories for crash frame consisting of V-belt N2597 or N2595, V-belt pulley N17847 or N17848, rocker and screws	**78861**
Motor protection switch 2.2 kW / 440V / 50Hz	**073186-V001**
Motor protection switch 2.2 kW / 440V / 60Hz	**073186-V002**
Mains cable up to 5.5 kW	**073182-V001**
Under-voltage release 440V / 60Hz	**N24129**
Aux. switch	**N18426**

Conversion kit to Utilus II with AC drive 230V / 50Hz	**79191-UII-W**
Delivery scope	
Electric motor, Motor protection switch and connection cable with plug	**N19108**
Motor accessories for carrying frame consisting of V-belt N2594 or N2403, V-belt pulley N17847 or N17848, rocker, screws	**78859**
Optional and not included in the kit:	
Motor 230V / 60Hz	**19110**

Conversion kits Capitano II

Designation	Part no.
Conversion kit to Capitano II with petrol engine	**79191-UII-B**
Delivery scope	
Petrol engine motor 4 kW	**N20703**
Motor accessories for carrying frame consisting of V-belt N3185, V-belt pulley 14300, rocker, shock absorber and screws	**78883**
Intake filter with Intake hose	**014539**
Optional and not included in the kit:	
Motor accessories for crash frame consisting of V-belt N17232, V-belt pulley 14300, rocker, shock absorber and screws	**78884**

Conversion kit to Capitano II with electric drive 440V / 50Hz	**79191-CII-E**
Delivery scope	
Three-phase electric motor 2.2 kW	**N3388**
Motor accessories for carrying frame consisting of V-belt N2595 or N3336, V-belt pulley 6637 or 55456 and screws	**78885**
Optional and not included in the kit:	
Motor protection switch 3 kW	**073184**
Connection cable up to 5.5 kW	**073182-V001**
Under-voltage release 440V / 60Hz	**N24129**
Aux. Switch	**N18426**

Conversion kits Mariner II

Designation	Part no.
Conversion kit to Mariner II with petrol engine	79191-MII-B
Delivery scope	
Petrol engine motor 6.6 kW	N19887
Motor accessories consisting of V-belt N17232, V-belt pulley 58209 and screws	78887
Intake filter with intake hose	14539

Conversion kit to Mariner II with electric drive 440V / 50Hz	79191-MII-E
Delivery scope	
Three-phase electric motor 4.0 kW	N3390
Motor accessories consisting of V-belt N2598 or N2597, V-belt pulley 6637 or 55456 and screws	78889
Optional:	
Motor protection switch 3 kW	073184
Motor protection switch 3 kW	073310
Connection cable up to 5.5 kW	073182-V001
Under-voltage switch 440V / 60Hz	N24129
Aux. switch	N18426

Conversion kit to Mariner 320 with petrol engine	79191-M320-B
Delivery scope	
Petrol engine motor 8,8 KW	N32539
Motor accessories consisting of V-belt N2598, V-belt pulley 125195, screws and filter cartridge with CO removal according to installed filter system.	78887
Intake filter with intake hose	14539

Conversion kit to Mariner 320 with electric drive 440V / 50Hz	79191-M320-E
Delivery scope	
Three-phase electric motor	N25462
Motor accessories consisting of V-belt N18841, V-belt pulley N18496, screws and motor protection switch 80585 including cable 7,5kW.	80444

Conversion kits Oceanus

Designation	Part no.
Conversion kit to Oceanus with petrol engine	**79191-OCE-B**
Delivery scope	
Petrol engine motor 4.0 kW	**N20703**
Motor accessories consisting of V-belt N15748, centrifugal clutch N26326 and screws	**78699**
Intake filter with intake telescope	**077323**

Conversion kit to Oceanus with electric drive 440V / 50Hz	**79191-OCE-E**
Delivery scope	
Three-phase electric motor 3.0 kW	**N2774**
Motor accessories consisting of V-belt N15725 or N15426, V-belt pulley N19248 or N25590 and screws	**78614**
Optional:	
Motor protection switch 3 kW / 50Hz / 400V incl. 5m connection cable	**78628**
Motor protection switch 3 kW / 220V incl. 5m connection cable	**077956-V003**
Motor protection switch 3 kW / 60Hz / 400V incl. 5m connection cable	**077956-V006**
Under-voltage switch 440V / 60Hz	**N24129**
Aux. switch	**N18426**

Designation	Part no.
Conversion kit to Oceanus II with AC drive 230V / 50-60Hz	**79191-OCE-W**
Delivery scope	
Electric motor 230V, Motor protection switch and connection cable with plug	**N25633**
Motor accessories consisting of V-belt N15725, V-belt pulley N19248, screws	**078614**

Pressure conversion kits

Designation	Part no.
Conversion kit from 225 bar to 330 bar	**074051**
Delivery scope	
Switch-over device	**073796-KD**
Safety valve 330 bar	**059410-330**
Filling hose	**N2817**
Filling valve 330 bar	**071344**

Conversion kit from 330 bar to 225 bar	**074052**
Delivery scope	
switch-over device	**073796-KD**
safety valve 225 bar	**059410-225**
Filling hose	**N2817**
Filling valve 225 bar	**071343**

* Not possible for PE 100

Circuit breakers/FI protection switches

Technical Data circuit breakers:

- setting from 1.0 A to 35 A
- voltage from 230V to 690V
- 1-pole to 4-pole

Technical Data FI-protection switch:

- setting from 16 A to 63 A
- voltage from 230V to 440V
- 2-pole and 4-pole

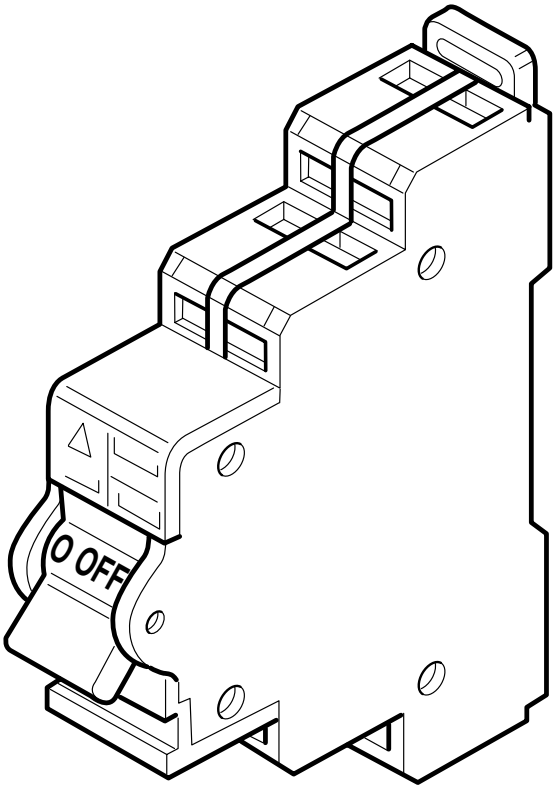

Typ	Area	Part no.
1 – pol. L	1.0 A / 230V	**N24800**
1 – pol. L	2.0 A / 230V	**N24120**
1 – pol. L	3.0 A / 230V	**N24790**
1 – pol.	6.0 A / 230V	**N20921**
1 – pol. L	10 A / 230V	**N25036**
1 – pol. C	13 A / 230V	**N27615**
1 – pol. B	16 A / 230V	**N26702**
2 – pol.	1.6 A / 690V	**N24077**
2 – pol.	2.0 A / 230V	**N27028**
2 – pol.	6.0 A / 690V	**N25528**
2 – pol.	10 A / 230V	**N27027**
2 – pol.	16 A / 230V	**N27029**
3 – pol.	2.0 A / 690V	**N26351**
3 – pol.	6.0 A / 440V	**N26628**
3 – pol.	16 A / 690V	**N26294**
3 – pol.	20 A / 690V	**N24161**
3 – pol.	25 A / 690V	**N24075**
3 – pol.	32 A/400V	**N26781**
3 – pol.	35 A / 690V	**N25437**
4 – pol.	16 A / 440V	**N27030**
FI ; 2 – pol.	16 A / 30mA / 230V	**N25037**
FI ; 4 – pol.	25A / 30mA / 440V	**N25577**
FI ; 4 – pol.	25A / 30mA /	**N25387**
FI ; 4 – pol.	63A / 30mA	**N24799**

Special tools /testing equipment

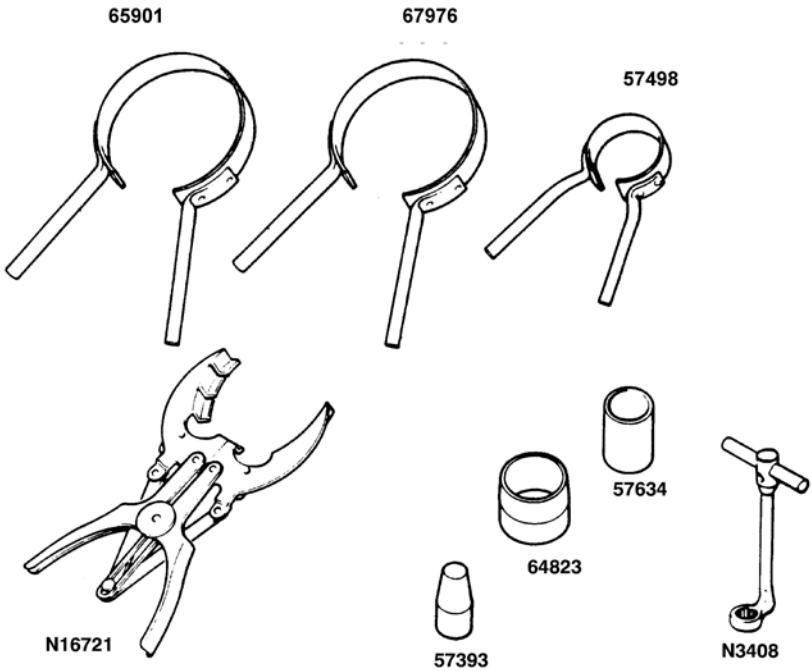

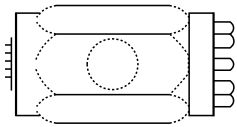

Tool for valve 82048

Type	Part no.
Flowmeter 0-50 l/min.	**81187-KD**
Flowmeter 0-100 l/min.	**81218-KD**
Piston ring clamp	**N16721**
Piston ring clamp	**N4452**
Piston ring band Ø 130	**65901**
Piston ring band Ø 160	**65039**
Piston ring band Ø 88, wide	**57494**
Piston ring band Ø 88, narrow	**67976**
Piston ring band Ø 45	**57498**
Piston ring band Ø 36	**57499**
Piston ring sleeve Ø 22	**57406**
Mounting sleeve Ø 22	**57393**
Mounting sleeve Ø 45	**57643**
Mounting sleeve	**64823**
Test pressure gauge	**057491**
Test pressure gauge	**057492**
Key, intermediate filter insert	**79846**
Key, cylinder	**N3408**
Valve key, intake / pressure valve 81409	**82048**
Leakage test spray with corrosion protection	**N25833**
Locking liquid, strong for screws, studs	**N25834**
Locking liquid, medium strong for screws and conical threads	**N28220**
Gasket metal-metal for high temperature connections, e.g. valve heads, cylinders (Silicone sealing)	**N18247**
Paper gaskets	**Loctite FAG 2**
O-rings, shaft seals (ring) shaft seals (shaft)	**072500**
Screws, pins, studs	**N19753**
Rubber and plastic parts, filter housing threads	**N19752**
Sealing ribbon /Teflon ribbon	**N19943**
Colour spray RAL 9006 (silver grey) 600ml	**N26255**
Colour spray RAL 5018 (turquois blue) 600ml	**N28410-RAL5018**
Test set for intermediate pressures (1x N1269/ 1x N1271/ 1x N2623/ 3x N3569/ 3x N18323/ 3x N3007)	**on request**

Oil

The correct oil quantities have to be checked with oil dipstick or oil glass. Refer to the current oil list for recommended lubricating oils.

Oil quantities for our compressor types:

Compressor model	oil	oil	top up	oil filter
	max. Ltrs.	min. Ltrs.	Ltrs.*	(Ltrs.)
U-10 JUNIOR JUNIOR II	0,35	0,28	-0,07	—
OCEANUS	01,30	01,10	-0,20	—
UTILUS CAPITANO MARINER	01,75	01,50	-0,25	—
UTILUS II CAPITANO II MARINER II	02,90	02,40	-0,50	Intern. Intern. Intern.
IK 100 IK 120	02,80	02,40	-0,40	—
IK 100II IK 120II IK 12.14II	02,90	02,40	-0,50	Intern. Intern. Intern.
K14 K14.11	02,80	02,20	-0,60	—
K15 K16 K150 K180 K18.1	04,40	04,10	-0,30	—
IK150II IK180II IK18.1 II	06,00	04,40	-1,60	Intern. Intern. Intern.
IK22.0 IK22.5	08,50	06,75	-1,75	-0,50
IK23.0 IK23.4	10,50	08,30	-2,20	-0,50
IK25.0, IK25.4, IK25.5, IK25.9, IK25.18 IK28.0, IK28.2, IK28.3	34,00	25,00	-9,00	-1,00

* between max and min

Oil types

Designation	Contents	Application	Part no.
Synthetic oil	1 Ltrs.	Breathing air, industrial air*	**N28355-1**
Synthetic oil	5 Ltrs.	Breathing air, industrial air*	**N28355-5**
Synthetic oil	20 Ltrs.	Breathing air, industrial air*	**N28355-20**
Mineral oil	1 Ltrs.	Breathing air, industrial air*	**N22138-1**
Mineral oil	5 Ltrs.	Breathing air, industrial air*	**N22138-5**
Mineral oil	20 Ltrs.	Breathing air, industrial air*	**N22138-20**
Synthetic oil	1 Ltrs.	Breathing air, industrial air*	**N19745-1**
Synthetic oil	5 Ltrs.	Breathing air, industrial air*	**N19745-5**
Synthetic oil	20 Ltrs.	Breathing air, industrial air*	**N19745-20**
Synthetic oil	1 Ltrs.	Natural gas*	**N26303-1**
Synthetic oil	5 Ltrs.	Natural gas*	**N26303-5**
Synthetic oil	20 Ltrs.	Natural gas*	**N26303-20**
Synthetic oil	1 Ltrs.	Industry, nitrogen, helium, argon*	**N18145-1**
Synthetic oil	5 Ltrs.	Industry, nitrogen, helium, argon*	**N18145-5**
Synthetic oil	20 Ltrs.	Industry, nitrogen, helium, argon*	**N18145-20**
Synthetic oil	1 Ltrs.	Industry, nitrogen*	**N30387-1**
Synthetic oil	5 Ltrs.	Industry, nitrogen*	**N30387-5**
Synthetic oil	20 Ltrs.	Industry, nitrogen*	**N30387-20**
Motor oil	1 Ltrs.	Honda engines	**073266**

Delivery date	Oil used at first delivery of breathing air compressors	Number of the used oil for breathing air compressors
Up to August 1992	Mineral oil	**Shell Ensis**
September 1992 to March 1999	Synthetic oil	**N19745**
from April 1999	Mineral oil	**N22138**
from August 2006	Synthetic oil	**N28355**
Mineral oil	5 Ltrs.	**N22138-5**
Mineral oil	20 Ltrs.	**N22138-20**

*Breathing air: certified for breathing air application in combination with Bauer air purification systems
*Industrial air: suitable for industrial air compressor units
*Natural gas: suitable for gas compressor units
Oil for screw compressors (B-Trox) = N30543

AVOIDING BREAKDOWNS:

BAUER KOMPRESSOREN MAINTENANCE KITS

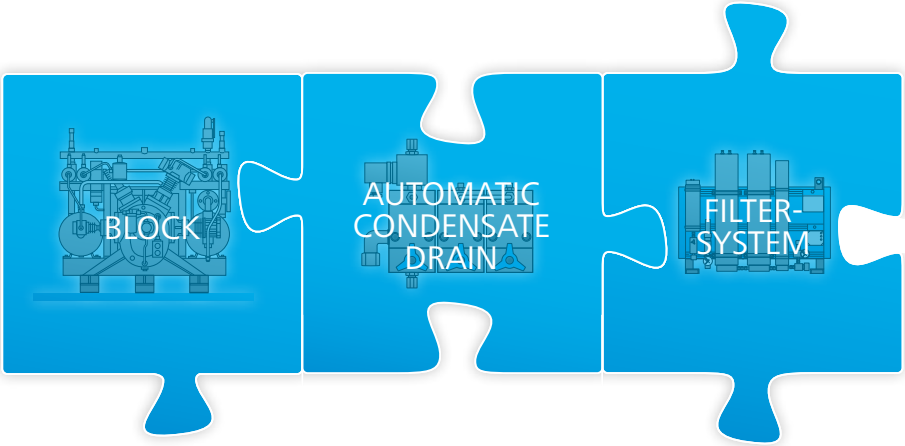

The advantages of our maintenance kits

- High availability of your units
- Prevents unscheduled breakdowns and idle times
- Securing of a long lifetime of your compressors
- Low maintenance costs with high reliability
- Maintenance kits are less expensive than buying the single components
- Reduction of repair and running costs of your compressor
- Exclusive use of BAUER original spare parts of proven BAUER quality

Maintenance kits: Breathing Air

Delivery: up to 300 L/min

similar to this image

Block type	Manufacturing period	annually (500 h)*	every two years (1000 h)*	every three years (1500 h)*	every four years (2000 h)*
K 100	12/84–11/86	A-100-F1-a1	A-100-F1-ab1	A-100-F1-a1	A-100-F1-abc1
K 100	11/86–01/00	A-100-F2/3-a1	A-100-F2/3-ab1	A-100-F2/3-a1	A-100-F2/3-abc1
K 100 II/ CAPITANO II	02/00–12/03	A-100II-F4-a1	A-100II-F4-ab1	A-100II-F4-a1	A-100II-F4-abc1
K 100 II/ CAPITANO II	01/04–05/04	A-100II-F5-a1	A-100II-F5-ab1	A-100II-F5-a1	A-100II-F5-abc1
K 100 II/ CAPITANO II	06/04–dato	A-100II-F6/7-a1	A-100II-F6/7-ab1	A-100II-F6/7-a1	A-100II-F6/7-abc1
K 12.14 II	02/00–12/03	A-12.14II-F1/2-a1	A-12.14II-F1/2-ab1	A-12.14II-F1/2-a1	A-12.14II-F1/2-abc1
K 12.14 II	01/04–05/04	A-12.14II-F3-a1	A-12.14II-F3-ab1	A-12.14II-F3-a1	A-12.14II-F3-abc1
K 12.14 II	06/04–dato	A-12.14II-F4/6-a1	A-12.14II-F4/6-ab1	A-12.14II-F4/6-a1	A-12.14II-F4/6-abc1
K12.14-Nitrox	11/05–dato	A-12.14OX4-F6-a1	A-12.14OX4-F6-ab1	A-12.14OX4-F6-a1	A-12.14OX4-F6-abc1
K 120/MARINER	12/84–10/86	A-120-F1-a1	A-120-F1-ab1	A-120-F1-a1	A-120-F1-abc1
K 120/MARINER	11/86–02/96	A-120-F2-a1	A-120-F2-ab1	A-120-F2-a1	A-120-F2-abc1
K 120/MARINER	03/96–01/00	A-120-F3-a1	A-120-F3-ab1	A-120-F3-a1	A-120-F3-abc1
K 120 II	02/00–12/03	A-120II-F4-a1	A-120II-F4-ab1	A-120II-F4-a1	A-120II-F4-abc1
K 120 II	01/04–05/04	A-120II-F5-a1	A-120II-F5-ab1	A-120II-F5-a1	A-120II-F5-abc1

* Whatever comes first

Maintenance kits: Breathing Air

Delivery: up to 300 L/min

similar to this image

Block type	Manufacturing period	annually (500 h)*	every two years (1000 h)*	every three years (1500 h)*	every four years (2000 h)*
K 120 II	06/04–dato	A-120II-F6/7-a1	A-120II-F6/7-ab1	A-120II-F6/7-a1	A-120II-F6/7-abc1
K 14	01/78–04/85	A-14-F5/6-a1	A-14-F5/6-ab1	A-14-F5/6-a1	A-14-F5/6-abc1
K 14	05/85–12/99	A-14-F7/8-a1	A-14-F7/8-ab1	A-14-F7/8-a1	A-14-F7/8-abc1
CAPITANO	06/72–02/00	A-Cap-F1/7-a1	A-Cap-F1/7-ab1	A-Cap-F1/7-a1	A-Cap-F1/7-abc1
JUNIOR/U10	02/93–04/98	A-Junior-F1/3-a1	A-Junior-F1/3-ab1	A-Junior-F1/3-a1	A-Junior-F1/3-abc1
JUNIOR II	05/98–12/01	A-JuniorII-F3-a1	A-JuniorII-F3-ab1	A-JuniorII-F3-a1	A-JuniorII-F3-abc1
JUNIOR II	01/02–dato	A-JuniorII-F4-a1	A-JuniorII-F4-ab1	A-JuniorII-F4-a1	A-JuniorII-F4-abc1
MARINER	01/78–01/00	A-Mariner-F2/3-a1	A-Mariner-F2/3-ab1	A-Mariner-F2/3-a1	A-Mariner-F2/3-abc1
OCEANUS	01/98–dato	A-Oceanus-F1-a1	A-Oceanus-F1-ab1	A-Oceanus-F1-a1	A-Oceanus-F1-abc1
PURUS	03/86–01/93	A-Purus-F2-a1	A-Purus-F2-ab1	A-Purus-F2-a1	A-Purus-F2-abc1
PUR/VARIUS/ U10	03/86–02/89	A-Purus-F1-a1			
K 13/UTILUS	01/75–12/77	A-Utilus-F6/7-a1	A-Utilus-F6/7-ab1	A-Utilus-F6/7-a1	A-Utilus-F6/7-abc1
K 13/UTILUS	01/78–12/79	A-Utilus-F8-a1	A-Utilus-F8-ab1	A-Utilus-F8-a1	A-Utilus-F8-abc1
K 13/UTILUS	01/80–12/99	A-Utilus-F9-a1	A-Utilus-F9-ab1	A-Utilus-F9-a1	A-Utilus-F9-abc1
UTILUS II	02/00–06/04	A-UtilusII-F4-a1	A-UtilusII-F4-ab1	A-UtilusII-F4-a1	A-UtilusII-F4-abc1

* Whatever comes first

Maintenance kits: Breathing Air

Delivery: 300–500 L/min

similar to this image

Block type	Manufacturing period	annually (500 h)*	every two years (1000 h)*	every three years (1500 h)*	every four years (2000 h)*
K 15	01/75–dato	A-15-F4/6-a1	A-15-F4/6-ab1	A-15-F4/6-a1	A-15-F4/6-abc1
K 15.1 II	03/02–dato	A-15.1II-F11/12-a1	A-15.1II-F11/12-ab1	A-15.1II-F11/12-a1	A-15.1II-F11/12-abc1
K 15.1 II - Nitrox	03/02–dato	A-15.1IIOX4-F11-a1	A-15.1IIOX4-F11-ab1	A-15.1IIOX4-F11-a1	A-15.1IIOX4-F11-abc1
K 150	05/82–10/01	A-150-F7/9-a1	A-150-F7/9-ab1	A-150-F7/9-a1	A-150-F7/9-abc1
K 15,1 II- Nitrox	06/06–dato	A-15.10X-F12-a1	A-15.10X-F12-ab1	A-15.10X-F12-a1	A-15.10X-F12-abc1
K 150 II	10/01–09/06	A-150II-F10-a1	A-150II-F10-ab1	A-150II-F10-a1	A-150II-F10-abc1
K 150 II	10/06–dato	A-150II-F11-a1	A-150II-F11-ab1	A-150II-F11-a1	A-150II-F11-abc1

* Whatever comes first

Maintenance kits: Breathing Air

Delivery: more than 500 L/min

similar to this image

Block type	Manufacturing period	annually (500 h)*	every two years (1000 h)*	every three years (1500 h)*	every four years (2000 h)*
K 180	06/82–03/90	A-180-F2-a1	A-180-F2-ab1	A-180-F2-a1	A-180-F2-abc1
K 180	04/90–09/01	A-180-F3/4-a1	A-180-F3/4-ab1	A-180-F3/4-a1	A-180-F3/4-abc1
K 180 II	08/01–dato	A-180II-F5/6-a1	A-180II-F5/6-ab1	A-180II-F5/6-a1	A-180II-F5/6-abc1
K 18.1	10/01–09/01	A-18.1-F3-a1	A-18.1-F3-ab1	A-18.1-F3-a1	A-18.1-F3-abc1
K 18.1 II	10/01–09/06	A-18.1II-F4/5-a1	A-18.1II-F4/5-ab1	A-18.1II-F4/5-a1	A-18.1II-F4/5-abc1
K 18.1 II	10/06–dato	A-18.1II-F6-a1	A-18.1II-F6-ab1	A-18.1II-F6-a1	A-18.1II-F6-abc1
K 22.0	01/85–12/91	A-22.0-F2/3-a1	A-22.0-F2/3-ab1	A-22.0-F2/3-a1	A-22.0-F2/3-abc1
K 22.0	01/95–dato	A-22.0-F4/5-a1	A-22.0-F4/5-ab1	A-22.0-F4/5-a1	A-22.0-F4/5-abc1
K 22.2	12/94–04/02	A-22.2-F1-a1	A-22.2-F1-ab1	A-22.2-F1-a1	A-22.2-F1-abc1
K 22.2	01/95–dato	A-22.2-F2-a1	A-22.2-F2-ab1	A-22.2-F2-a1	A-22.2-F2-abc1
K 23.0	01/92–12/04	A-23.0-F11/13-a1	A-23.0-F11/13-ab1	A-23.0-F11/13-a1	A-23.0-F11/13-abc1

* Whatever comes first

Maintenance kits: Industry

Delivery: up to 300 L/min

similar to this image

Block type	Manufacturing period	annually (1000 h)*	every two years (2000 h)*	every three years (3000 h)*	every four years (4000 h)*
K100	11/86 – 01/00	I-100-F2/3-a1	I-100-F2/3-ab1	I-100-F2/3-a1	I-100-F2/3-abc1
K 100 II/ CAPIT II	01/00–12/03	I-100II-F4-a1	I-100II-F4-ab1	I-100II-F4-a1	I-100II-F4-abc1
K 100 II/ CAPIT II	01/04-05/04	I-100II-F5-a1	I-100II-F5-ab1	I-100II-F5-a1	I-100II-F5-abc1
K 100 II/ CAPIT II	06/04–dato	I-100II-F6/7-a1	I-100II-F6/7-ab1	I-100II-F6/7-a1	I-100II-F6/7-abc1
K 120	03/96–01/00	I-120-F2/3-a1	I-120-F2/3-ab1	I-120-F2/3-a1	I-120-F2/3-abc1
K 120 II	02/00–12/03	I-120II-F4-a1	I-120II-F4-ab1	I-120II-F4-a1	I-120II-F4-abc1
K 120 II	01/04–05/04	I-120II-F5-a1	I-120II-F5-ab1	I-120II-F5-a1	I-120II-F5-abc1
K 120 II	06/04–dato	I-120II-F6/7-a1	I-120II-F6/7-ab1	I-120II-F6/7-a1	I-120II-F6/7-abc1
K12.14II	02/00–12/03	I-12.14II-F1/2-a1	I-12.14II-F1/2-ab1	I-12.14II-F1/2-a...1	I-12.14II-F1/2-abc1
K12.14II	01/04–05/04	I-12.14II-F3-a1	I-12.14II-F3-ab1	I-12.14II-F3/6-a1	I-12.14II-F3-abc1
K12.14II	06/04 – dato	I-12.14II-F4/6-a1	I-12.14II-F4/6-ab1	I-12.14II-F4/6-a1	I-12.14II-F4/6-abc1
K 14	05/85-12/99	I-14-F7/8-a1	I-14-F7/8-ab1	I-14-F7/8-a1	I-14-F7/8-abc1
K 140	12/87–12/99	I-140-F7/8-a1	I-140-F7/8-ab1	I-140-F7/8-a1	I-140-F7/8-abc1
S 30	07/00–dato	I-30-F1-a1	I-30-F1-ab1	I-30-F1-a1	I-30-F1-abc1
K 53.5	12/92–10/93	I-53.5-F1-a1	I-53.5-F1-ab1	I-53.5-F1-a1	I-53.5-F1-abc1
K 53.5	11/93–dato	I-53.5-F2-a1	I-53.5-F2-ab1	I-53.5-F2-a1	I-53.5-F2-abc1

* Whatever comes first

Maintenance kits: Industry

Delivery: 300–500 L/min

similar to this image

Block type	Manufacturing period	annually (1000 h)*	every two years (2000 h)*	every three years (3000 h)*	every four years (4000 h)*
K 15.1	03/92–04/93	I-15.1-F8-a1	I-15.1-F8-ab1	I-15.1-F8-a1	I-15.1-F8-abc1
K 15.1 II	03/02–dato	I-15.1II-F11/ 12-a1	I-15.1II-F11/12-ab1	I-15.1II-F11/12-a1	I-15.1II-F11/12-abc1
K 150 II	10/01–09/06	I-150II-F10-a1	I-150II-F10-ab1	I-150II-F10-a1	I-150II-F10-abc1
K 150 II	10/06–dato	I-150II-F11-a1	I-150II-F11-ab1	I-150II-F11-a1	I-150II-F11-abc1
K 150	05/82–09/01	I-150-F7/9-a1	I-150-F7/9-ab1	I-150-F7/9-a1	I-150-F7/9-abc1

* Whatever comes first

Industry/Block-Maintenance kits

Delivery: more than 500 L/min

similar to this image

Block type	Manufacturing period	annually (1000 h)*	every two years (2000 h)*	every three years (3000 h)*	every four years (4000 h)*
K 18.1 II	10/01–09/06	I-18.1II-F4/5-a1	I-18.1II-F4/5-ab1	I-18.1II-F4/5-a1	I-18.1II-F4/5-abc1
K 18.1II	10/06–dato	I-18.1II-F6-a1	I-18.1II-F6-ab1	I-18.1II-F6-a1	I-18.1II-F6-abc1
K 180	06/82–03/90	I-180-F2-a1	I-180-F2-ab1	I-180-F2-a1	I-180-F2-abc1
K 180	04/90–09/01	I-180-F3/4-a1	I-180-F3/4-ab1	I-180-F3/4-a1	I-180-F3/4-abc1
K 180 II	08/01–dato	I-180II-F5/6-a1	I-180II-F5/6-ab1	I-180II-F5/6-a1	I-180II-F5/6-abc1
K 22.0	04/02–12/97	I-22.0-F2/3-a1	I-22.0-F2/3-ab1	I-22.0-F2/3-a1	I-22.0-F2/3-abc1
K 22.0	01/92–dato	I-22.0-F4/5-a1	I-22.0-F4/5-ab1	I-22.0-F4/5-a1	I-22.0-F4/5-abc1
K 22.5	01/85–12/94	I-22.5-F1/2-a1	I-22.5-F1/2-ab1	I-22.5-F1/2-a1	I-22.5-F1/2-abc1
K 22.5	10/94–dato	I-22.5-F3-a1	I-22.5-F3-ab1	I-22.5-F3-a1	I-22.5-F3-abc1
K 22.12	09/97–dato	I-22.12-F2-a1	I-22.12-F2-ab1	I-22.12-F2-a1	I-22.12-F2-abc1
K 23.0	01/92–12/04	I-23.0-F11/13-a1	I-23.0-F11/13-ab1	I-23.0-F11/13-a1	I-23.0-F11/13-abc1
K 23.0	01/05–09/09	I-23.0-F14-a1	I-23.0-F14-ab1	I-23.0-F14-a1	I-23.0-F14-abc1
K 23.0	10/09–dato	I-23.0-F15-a1	I-23.0-F15-ab1	I-23.0-F15-a1	I-23.0-F15-abc1

* Whatever comes first

Industry/Block-Maintenance kits

Delivery: more than 500 L/min

similar to this image

Block type	Manufacturing period	annually (1000 h)*	every two years (2000 h)*	every three years (3000 h)*	every four years (4000 h)*
K 23.4	11/95–dato	I-23.4-F5-a1	I-23.4-F5-ab1	I-23.4-F5-a1	I-23.4-F5-abc1
K 25.0	07/83–12/95	I-25.0-F2/4-a1	I-25.0-F2/4-ab1	I-25.0-F2/4-a1	I-25.0-F2/4-abc1
K 25.0	01/96–dato	I-25.0-F5-a1	I-25.0-F5-ab1	I-25.0-F5-a1	I-25.0-F5-abc1
K 25.18	07/86–01/94	I-25.18-F1-a1	I-25.18-F1-ab1	I-25.18-F1-a1	I-25.18-F1-abc1
K 25.18	02/94–dato	I-25.18-F2/3-a1	I-25.18-F2/3-ab1	I-25.18-F2/3-a1	I-25.18-F2/3-abc1
K 25.4	07/84–dato	I-25.4-F1/2-a1	I-25.4-F1/2-ab1	I-25.4-F1/2-a1	I-25.4-F1/2-abc1
K 25.9	10/91–dato	I-25.9-F1/3-a1	I-25.9-F1/3-ab1	I-25.9-F1/3-a1	I-25.9-F1/3-abc1
K 28.0	02/94–dato	I-28.0-F2/3-a1	I-28.0-F2/3-ab1	I-28.0-F2/3-a1	I-28.0-F2/3-abc1
K 28.2	02/94–dato	I-28.2-F2-a1	I-28.2-F2-ab1	I-28.2-F2-a1	I-28.2-F2-abc1
K 28.2	07/84-01/94	I-28.2-F1-a1	I-28.2-F1-ab1	I-28.2-F1-a1	I-28.2-F1-abc1

* Whatever comes first

Industry/Block-Maintenance kits

Booster Industry

similar to this image

Block type	Manufacturing period	annually (1000 h)*	every two years (2000 h)*	every three years (3000 h)*	every four years (4000 h)*
K 12.2	02/02–dato	I-12.2II-F5/7-a1	I-12.2II-F5/7-ab1	I-12.2II-F5/7-a1	I-12.2II-F5/7-abc1
K 12.2	03/96–01/00	I-12.2-F3/4-a1	I-12.2-F3/4-ab1	I-12.2-F3/4-a1	I-12.2-F3/4-abc1
K 12.2	03/92–02/96	I-12.2-F2-a1	I-12.2-F2-ab1	I-12.2-F2-a1	I-12.2-F2-abc1
K 12.3 II	04/05–dato	I-12.3II-F1/2-a1	I-12.3II-F1/2-ab1	I-12.3II-F1/2-a1	I-12.3II-F1/2-abc1
K 12.4	04/87–03/96	I-12.4-F1-a1	I-12.4-F1-ab1	I-12.4-F1-a1	I-12.4-F1-abc1
K 12.4	04/96–01/00	I-12.4-F2/3-a1	I-12.4-F2/3-ab1	I-12.4-F2/3-a1	I-12.4-F2/3-abc1
K 12.4 II	02/00–12/03	I-12.4II-F4-a1	I-12.4II-F4-ab1	I-12.4II-F4-a1	I-12.4II-F4-abc1
K 12.4 II	01/04–06/04	I-12.4II-F5-a1	I-12.4II-F5-ab1	I-12.4II-F5-a1	I-12.4II-F5-abc1
K 12.4 II	06/04–dato	I-12.4II-F6/7-a1	I-12.4II-F6/7-ab1	I-12.4II-F6/7-a1	I-12.4II-F6/7-abc1
K 15.2 II	10/01–dato	I-15.2II-F1-a1	I-15.2II-F1-ab1	I-15.2II-F1-a1	I-15.2II-F1-abc1
K 15.3 II	04/02–09/06	I-15.3II-F1-a1	I-15.3II-F1-ab1	I-15.3II-F1-a1	I-15.3II-F1-abc1
K 15.3 II	10/06–dato	I-15.3II-F2/3-a1	I-15.3II-F2/3-ab1	I-15.3II-F2/3-a1	I-15.3II-F2/3-abc1
K 15.4 II	04/02–dato	I-15.4II-F1-a1	I-15.4II-F1-ab1	I-15.4II-F1-a1	I-15.4II-F1-abc1

* Whatever comes first

Maintenance kits: CNG

Delivery: up to 500 L/min

similar to this image

Block type	Manufacturing period	annually (2000 h)*	every two years (4000 h)*	every three years (6000 h)*	every four years (8000 h)*
K 120	03/96–01/00	G-120-F2/3-a1	G-120-F2/3-ab1	G-120-F2/3-a1	G-120-F2/3-abc1
K 120 II	02/00–12/03	G-120II-F4-a1	G-120II-F4-ab1	G-120II-F4-a1	G-120II-F4-abc1
K 120 II	01/04–dato	G-120II-F5/7-a1	G-120II-F5/7-ab1	G-120II-F5/7-a1	G-120II-F5/7-abc1
K 15.1	07/97–09/01	G-15.1-F10-a1	G-15.1-F10-ab1	G-15.1-F10-a1	G-15.1-F10-abc1
K 150	07/97–09/01	G-150-F9-a1	G-150-F9-ab1	G-150-F9-a1	G-150-F9-abc1
K 150 II	10/01–dato	G-150II-F10-a1	G-150II-F10-ab1	G-150II-F10-a1	G-150II-F10-abc1

* Whatever comes first

Maintenance kits: CNG

Delivery: more than 500 L/min

similar to this image

Block type	Manufacturing period	annually (2000 h)*	every two years (4000 h)*	every three years (6000 h)*	every four years (8000 h)*
K 18.1	01/90–09/01	G-18.1-F3-a1	G-18.1-F3-ab1	G-18.1-F3-a1	G-18.1-F3-abc1
K 18.1 II	10/01–dato	G-18.1II-F4/5-a1	G-18.1II-F4/5-ab1	G-18.1II-F4/5-a1	G-18.1II-F4/5-abc1
K 22.0	01/95–dato	G-22.0-F4/5-a1	G-22.0-F4/5-ab1	G-22.0-F4/5-a1	G-22.0-F4/5-abc1
K 22.0	09/97–dato	G-22.0-F2-a1	G-22.0-F2-ab1	G-22.0-F2-a1	G-22.0-F2-abc1
K 22.10	12/95–08/91	G-22.10-F1-a1	G-22.10-F1-ab1	G-22.10-F1-a1	G-22.10-F1-abc1
K 22.11	01/99–dato	G-22.11-F2-a1	G-22.11-F2-ab1	G-22.11-F2-a1	G-22.11-F2-abc1
K 22.12	12/95–dato	G-22.12-F1/2-a1	G-22.12-F1/2-ab1	G-22.12-F1/2-a1	G-22.12-F1/2-abc1
K 22.13	12/95–dato	G-22.13-F1/2-a1	G-22.13-F1/2-ab1	G-22.13-F1/2-a1	G-22.13-F1/2-abc1
K 22.14	12/95–dato	G-22.14-F1/2-a1	G-22.14-F1/2-ab1	G-22.14-F1/2-a1	G-22.14-F1/2-abc1
K 23.0	06/89–12/93	G-23.0-F7/12-a1	G-23.0-F7/12-ab1	G-23.0-F7/12-a1	G-23.0-F7/12-abc1
K 23.0	02/09–dato	G-23.0-F15-a1	G-23.0-F15-ab1	G-23.0-F15-a1	G-23.0-F15-abc1
K 23.1	02/94–12/04	G-23.1-F10-a1	G-23.1-F10-ab1	G-23.1-F10-a1	G-23.1-F10-abc1
K 23.1	01/05–dato	G-23.1-F11-a1	G-23.1-F11-ab1	G-23.1-F11-a1	G-23.1-F11-abc1
K 24.0	05/06–dato	G-24.0-F1-a1	G-24.0-F1-ab1	G-24.0-F1-a1	G-24.0-F1-abc1
K 24.11	01/06–dato	G-24.11-F1/2-a1	G-24.11-F1/2-ab1	G-24.11-F1/2-a1	G-24.11-F1/2-abc1
K 25.0	01/96–06/04	G-25.0-F5-a1	G-25.0-F5-ab1	G-25.0-F5-a1	G-25.0-F5-abc1
K 25.0	07/04–dato	G-25.0-F6-a1	G-25.0-F6-ab1	G-25.0-F6-a1	G-25.0-F6-abc1
K 28.0	01/96–dato	G-28.0-F3-a1	G-28.0-F3-ab1	G-28.0-F3-a1	G-28.0-F3-abc1
K 28.21	01/96–dato	G-28.21-F1-a1	G-28.21-F1-ab1	G-28.21-F1-a1	G-28.21-F1-abc1
K 28.22	01/96–dato	G-28.22-F1-a1	G-28.22-F1-ab1	G-28.22-F1-a1	G-28.22-F1-abc1
K 28.23	01/96–dato	G-28.23-F1-a1	G-28.23-F1-ab1	G-28.23-F1-a1	G-28.23-F1-abc1

* Whatever comes first

Maintenance kits: Booster

similar to this image

Block type	Manufacturing period	annually (2000 h)*	every two years (4000 h)*	every three years (6000 h)*	every four years (8000 h)*
K 15.2	06/87–09/01	G-15.2-F1-a1	G-15.2-F1-ab1	G-15.2-F1-a1	G-15.2-F1-abc1
K 15.2 II	10/01–09/06	G-15.2II-F1-a1	G-15.2II-F1-ab1	G-15.2II-F1-a1	G-15.2II-F1-abc1
K 15.2 II	10/06–dato	G-15.2II-F2-a1	G-15.2II-F2-ab1	G-15.2II-F2-a1	G-15.2II-F2-abc1
K 15.4 II	04/02–09/06	G-15.4II-F1-a1	G-15.4II-F1-ab1	G-15.4II-F1-a1	G-15.4II-F1-abc1
K 15.4 II	10/06–dato	G-15.4II-F2-a1	G-15.4II-F2-ab1	G-15.4II-F2-a1	G-15.4II-F2-abc1

* Whatever comes first

Maintenance kits: ACD

ACD /Block-Maintenance kits

The maintenance intervals of the maintenance kits for automatic condensation drain depend on the field of application (breathing air, industry, natural gas). Choose the corresponding maintenance interval according to your compressor unit.

Block type	Used for	Part no.
059230	K100, K120	**059230-a1**
060409	K28.3-G	**060409-a1**
060410	K100/-G, K120/-G (to F3), GIB 12.2, K12.14, K12.4 (F3),	**060410-a1**
	K14.11/-G, K150/-G/-C, IK15.1-G/-C, K15.4, K15.11/-G,	
	K180/-G, K18.1/-G, K22.0 (to 4), K22.0-420, IK22.5,	
	K23.0/-G, K23.4, K25.0/-G, K25.18, K25.4/-G, K25.5,	
	K25.9, K28.0/-G, K28.2, K28.3/-G, MV2, Verticus III,	
	Mini-Verticus	
060411	K22.0 (to F4), IK22.5, K18.1	**060411-a1**
060412	K100-G, K120-G, K150-G/-C, IK15.1-G/-C, K180-G (F3),	**060412-a1**
	K22.0 (to F4), K22.0-420, K23.0/-G, K25.0/-G,K28.0/-G,	
	K85.0, Verticus III,	
060491	K150-G/-C, IK15.1-G/-C, Verticus III	**060491-a1**
061008	K100/-G, K120/-G (to F3), GIB 12.2, K12.4 (F3), MV2,	**061008-a1**
	Mini-Verticus, Verticus III	
061010	K12.14, K150/-G, K15.1, K15.4, K15.11/-G, K180,	**061010-a1**
	K18.1/-G, K14.11/-G, Verticus III	
062523	K150-G, K180-G (F3), K22.0/-G, K22.0-420, IK 22.5,	**062523-a1**
	K23.0/-G, K23.4, K25.0/-G, K25.4/-G, K25.5, K25.9,	
	K25.18, K28.0/-G, K28.2/-G, K28.3, K85.0, Verticus III	
064008	K14, KAP 14, 4Ö, KAP15	**064008-V001/V002-a1**
064009	K14, KAP 14	**064009-V001/V002-a1**
064004	K15.11/-G, K18.1/-G	**066004-a1**
066147	K18.1, K18.1-G, K18.1-GI	**066147-a1**

Maintenance kits: ACD

similar to this image

Condensation valve name	Used for	Part no.
069380	4Ö,KAP 15,	069380-a1
070711	MFS/CFS 18.1	070711-a1
070746	K23.0	070746-a1
070747	MFS/CFS 18.1	070747-a1
072697	G15.1, G18.1, Verticus III (Helium)	072697-a1
073042	K100/-G/-C, K120/-G/-C	073042-a1
073177	K100/-G/-C, K120/-G/-C, G15., G18.1, Verticus III (Helium)	073177-a1
075169	MP3E (Mariner 3E), Utilus, Capitano, Mariner, MII 2Ö, 3Ö, 3.5Ö	075169-a1
72697-S01	B-TROX Low Pressure Compressor B262	072697-a1
73177-S01	Verticus 5	073177-a1
84176	SECCANT 4	84176-a1
012937	Automatic condensate drain, KA , KAP, K14	012937-a1

Maintenance kits: Filter System

Filter system Breathing Air

similar to this image

Filtersystem maintenance kits	Manufacturing period	annually
P21	11/85–01/99	A-P21–F1/4-a1
P21	02/99–dato	A-P21–F5/8-a1
P30 / P31	06/03–dato	A-P31–F1-a1
P40 / 41	01/86–dato	A-P40/41-F1/8-a1
P60 / 61	01/86–dato	A-P 60/61-F1/8-a1
P80 / 81	01/86–dato	A-P80/81-F1/8-a1
P100 / 101	01/86–dato	A-P100/101-F1/8-a1
P120	09/87–dato	A-P120/121-F1/6-a1

Maintenance kits: Filter System

Filter system Industry

Filtersystem maintenance kits	Manufacturing period	annually
P21	11/85–01/99	I-P21–F1/4-a1
P21	02/99–dato	I-P21–F5/8-a1
P31	06/03–dato	I-P31–F1-a1
P40 / 41	01/86–dato	I-P40/41-F1/8-a1
P60 / 61	01/86–dato	I-P 60/61-F1/8-a1
P80 / 81	01/86–dato	I-P80/81-F1/8-a1
P100 / 101	01/86–dato	I-P100/101-F1/8-a1
P120	09/87–dato	I-P120/121-F1/6-a1

Filter system Natural Gas

Filtersystem maintenance kits	Manufacturing period	annually
P60 / 61	01/86–dato	G-P 60/61-F1/8-a1

Maintenance kits: Oil-/ Water Separator

Maintenance kits for oil- /water separators

The maintenance intervals of the maintenance kits for oil / water separators depend on the field of application (breathing air, industry, natural gas). Choose the corresponding maintenance interval according to your compressor unit.

Oil-/water separator	Used for	Part no.
055719	BCI, P120, P140, SEC4/A-350	055719-a1
075615	BK12.2-F7, BK12.2II, IK100-F7, IK100-GI-F6, IK100II, IK100II-GI, IK12.14-F6, IK12.14-GI-F5, IK12.14II, IK12.14II-GI, IK120-F7, IK120-GI-F6, IK120II-GI, IK150-F11, IK150II, IK180-F6, IK180II, SEC3/A-350	075615-a1
075631	SEC3/A-350	075631-a1
090058	BK12.2II, IK100II-G-GI, IK12.14II-GI, IK120II-G, IK15.11II-G, BK12.2-F2, IK100-F2/3, IK120-F2/3, IK120-GI, IK140-Block, IK140-F7, IK150, IK150-F8, IK150-GI, IK150-GI-F8, IK180-GI, IK180-GI-F3, K14, K14-F7, K150, K150-F8, K180, K180-F3, IKA100-3-V001, BK12.2, BK12.2-F3/4, P100-350, P60-350, P80-350, SEC3/A-350, MV2-P61, MV2-P41, KAP150-15DAH-GRS	090058-a1
090070	P80	090070-a1
090100	IK100-420-F4, IK100II-420, IK12.14-F6, IK12.14-GI-F5, IK12.14II, IK12.14II-GI, IK15.11-F2, IK15.11-GI-F2, IK15.11II, IK15.11II-GI, IK18.1-F6, IK18.1-GI-F6, IK18.1II, IK18.1II-GI, Mariner320-420-P41, K22.0-420-V099, I11-3, I100-3-H, KAP/V5-F-420	090100-a1
090110	P41, KAP14, P61.KAP180, KAP15, MP3E	090110-a1
090150	IK18.1, BCI	090150-a1
090300	IK15.2-C-F2, BK15.4-C-F2, BK15.4II-C, IK100-C-F6, IK100II-C, IK120-C-F6, IK120II-C, IK15.1-C-F12, IK15.1II-C, IK15.2II-C, IK120, IK120-V001, CFS15.1-11, CFS18.1-13, IK14.11-G, IK14.11-G-F7, IK15.1-C, IK15.1-C-F9, IK15.1-G, IK15.1-G-F9, IK18.1-C, IK18.1-G-Block-F1/2, IK100-G, IK100-G-F2, IK120-G, IK120-G-F2	090300-a1

Maintenance kits: Oil-/ Water Separator

similar to this image

Oil-/water separator	Used for	Part no.
090590	P100-350, P60-350, P80-350,	090590-a1
090600	P120-350, P140-350,	090600-a1
120514-EU	CFS24.20-68-DUOII, CFS26.10-110-DUOII, CFS28.24-75-DUOII, CFS28.24-90-TRIOIII	120514-a1
79416	BK12.2-F7, BK12.2II, BK15.3-F2, BK15.3-F3, BK15.3II, BK15.4-C-F2, BK15.4II-C, IK100-420-F4, IK100-C-F6, IK100-F7, IK100-G-F6, IK100-GI-F6, IK100II-420, IK100II, IK100II-C, IK100II-G, IK100II-GI, IK12.14-F6, IK12.14-GI-F5, IK12.14II, IK12.14II-GI, IK120-C-F6, IK120-F7, IK120-G-F6, IK120-GI-F6, IK120II, IK120II-C, IK120II-G, IK120II-GI, IK15.11-F2, IK15.11-GI-F2, IK15.11II, IK15.11II-G, IK15.11II-GI, IK15.1-C-F12, IK15.1-F12, IK15.1-G-F12, IK15.1-GI-F12, IK15.1II, IK15.1II-C, IK15.1II-G, IK15.1II-GI, IK15.2-C-F2, IK15.2II-C, IK150-F11, IK150-GI-F11, IK150II, IK150II-GI, IK18.1-F6, IK18.1-G-F6, IK18.1-GI-F6, IK18.1II, IK18.1II-G, IK18.1II-GI, IK180-F6, IK180-GI-F6, IK180II, IK180II-GI	79416-a1
80141	IK22.0-C-V007, BK15.4-C-F2-L-V, CFS150-13-DUOI, IK15.2-C-F2-L-V	80141-a1
078086	MFS	078086-a1

Miscellaneous

Other maintenance kits

similar to this image

Designation	Manufacturing period	annually
For automatic selector unit	–	N27357
For automatic selector unit	–	N27358
Filling valve / Paintball	11/03–dato	N28610
Lever filling valve	01/2006–dato	N29617
Lever filling valve	01/08–12/96	N5052
Lever filling valve nitrogen	01/2007–dato	N30890
Lever filling valve	01/97–12/06	N6676
UE 068960	03/86–dato	N5931
UE 068960	03/86–dato	N5932

BAUER ADVERTISING GOODS

apparel

Baseball Cap

Description:
Navy blue, cotton, stitched block logo on the front, stitched web address on the back, reflector strip on the shield

Min. order quantity: 5 pce

Order no. N31384

Baseball Cap PureAir

Description:
Navy blue, cotton, PureAir Rubber badge on the front, stitched web address on the back, reflector strips on the shield

Min. order quantity: 5 pce

Order no. N33158

Basecap w/o shield

Description:
Navy blue, cotton, block logo on the front, company logo on the back.

Min. order quantity: 5 pce

Order no. N31385

Beanie

Description:
Thinsulate knitting material, block logo on the front, company logo on the back. ck auf Rückseite

Min. order quantity: 5 pce

Order no. N31386

Polo Shirt

Description:
Cotton, navy blue, high quality,block logo on the breast, company logo on sleeve.

Min. order quantity: 1 pce

Order no. N31388 (S)
Order no. N31988 (M)
Order no. N31989 (L)
Order no. N31990 (XL)
Order no. N31991 (XXL)

Wind Breaker

Description:
Navy blue, polyester with fleece lining, company logo on the breast, silver reflecting block logo on the back.

Min. order quantity: 1 pce

Order no. N31387 (S)
Order no. N31984 (M)
Order no. N31985 (L)
Order no. N31986 (XL)
Order no. N31987 (XXL)

Sailing jacket

Description:
Waterproof and breatha- ble jacket, 100% Oxford Nylon with XPU membrane. Sportive design, reflective stripes, adju- stable hood and inner pockets

Min. order quantity: 1 pce

Order no. N34403 (XS)
Order no. N34558 (S)
Order no. N34559 (M)
Order no. N34560 (L)
Order no. N34561 (XL)
Order no. N34562 (XXL)
Order no. N34563 (XXXL)

Shoulder scarf

Description:
Ladies' shoulder scarf, made of precious Chinese silk, in royal blue with an imprinted pattern of the K14 compressor, size 90 x 90 cm. Supplied in a sophistica- ted gift box.

Min. order quantity: 1 pce

Order no. N33901

Blouse, long-sleeved, light blue

Description:
Eterna blouse, long sleeve, noniron, 100% Swiss cotton, tested on harmful substances.

Min. order quantity: 1 pce

Order no. N32229 (Size 36*)
Order no. N32230 (Size 38*)
Order no. N32231 (Size 40*)
Order no. N32232 (Size 42*)
Order no. N32233 (Size 44*)

Blouse, long-sleeved, white

Description:
Eterna blouse, long sleeve, noniron, 100% Swiss cotton, tested on harmful substances.

Min. order quantity: 1 pce

Order no. N32234 (Size 36*)
Order no. N32235 (Size 38*)
Order no. N32236 (Size 40*)
Order no. N32237 (Size 42*)
Order no. N32238 (Size 44*)

Blouse, short-sleeved, light blue

Description:
Eterna blouse, short sleeve, noniron, 100% Swiss cotton, tested on harmful substances.

Min. order quantity: 1 pce

Order no. N32239 (Size 36*)
Order no. N32240 (Size 38*)
Order no. N32241 (Size 40*)
Order no. N32242 (Size 42*)
Order no. N32243 (Size 44*)

Blouse, short-sleeved, white

Description:
Eterna blouse, short sleeve, noniron, 100% Swiss cotton, tested on harmful substances.

Min. order quantity: 1 pce

Order no. N32244 (Size 36*)
Order no. N32245 (Size 38*)
Order no. N32246 (Size 40*)
Order no. N32247 (Size 42*)
Order no. N32248 (Size 44*)

Shirt, long-sleeved, light blue

Description:
Eterna shirt, long sleeve, with button down collar, non-iron, 100% Swiss cotton, tested on harmful substances.

Min. order quantity: 1 pce

Order no. N32258 (Size 38*)
Order no. N32259 (Size 39*)
Order no. N32260 (Size 40*)
Order no. N32261 (Size 41*)
Order no. N32262 (Size 42*)
Order no. N32263 (Size 43*)
Order no. N32264 (Size 44*)
Order no. N32265 (Size 45*)
Order no. N32266 (Size 46*)

Shirt, long-sleeved, white

Description:
Eterna shirt, long sleeve, button down collar, non-iron, 100% Swiss cotton, tested on harmful substances.

Min. order quantity: 1 pce

Order no. N32249 (Size 38*)
Order no. N32250 (Size 39*)
Order no. N32251 (Size 40*)
Order no. N32252 (Size 41*)
Order no. N32253 (Size 42*)
Order no. N32254 (Size 43*)
Order no. N32255 (Size 44*)
Order no. N32256 (Size 45*)
Order no. N32257 (Size 46*)

APPAREL

Tie

Description:
Men's tie, made of precious Chinese silk in heavy quality, in royal blue.

Min. order quantity: 1 pce
Order no. N33899

Tie clip

Description:
Tie clip with Bauer logo, silver plated steel, supplied in gift box.

Min. order quantity: 5 pce
Order no. N33900

Give Aways

Screw Driver "Extension"

Description:
Practical tool with closing cap, bit insert and ratchet function. Bit insert slides out by push button operation.

Min. order quantity: 1 pce
Order no. N31399

Ball Point

Description:
Closing lid, company logo and block logo.

Min. order quantity: 50 pce
Order no. N31396

Notepad

Description:
DIN A4, squared, 50 sheets.

Min. order quantity: 1pce
Order no. N32705

Business Card Box

Description:
Size: 103 x 60 x 10 mm, weight: 67 g, material: metal.

Min. order quantity: 1 pce
Order no. N35097

Pin

Description:
Block logo in high gloss Aluminium, company logo.

Min. order quantity: 10 pce
Order no. N31397

Give Aways

Aluminium Flash Light

Description:
Alu metal housing, including 4 watt LED.

Min. order quantity: 1 pce
Order no. N35095

LorryBag® ECO

Description:
Shoulder bag in blue Cordura, made of lorry hood material. Organizer elements, flat insert pocket, shoulder strap.Size: ca. 37 x 29 x 13 cm

Min. order quantity: 1 pce
Order no. N34404

Bag

Description:
Blue, Cordura, pen holders, stitched company logo, rubber block logo.

Min. order quantity: 5 pce
Order no. N31389

Lanyard

Description:
Blue, Cordura, heavy stitched, snap buckle.

Min. order quantity: 10 pce
Order no. N31390

Pocket Knife

Description:
Practically equipped, silver, black grip zones, partially hand painted.

Min. order quantity: 5 pce
Order no. N31391

Leatherman Tool

Description:
Including pliers, wire cutter, serrated knife, wood saw, sci- ssors, various files, bit holder, screwdriver, ruler (in./cm), can opener, strip knife, metal eye. Length: 10.2 cm weight: 241 g material: stainless steel.

Min. order quantity: 1 pce
Order no. N35536

USB Stick

Description:
Memory capacity: 8 GB Reading: 30 MB/sec Writing: 10 MB/sec
In gift box.

Min. order quantity: 1 pce
Order no. N35096

Wetnotes

Description:
Waterproof notebook including pen. Can be used under water. Ideal for diving data. Colour: Black.
Logo: PURE AIR SAFE DIVING

Min. order quantity: 1 pce
Order no. N35539

Thermos Flask

Description:
Stainless steel, laser-printed, block log on cup cap, laser-printed company logo on front, capacity 0,5 liter.

Min. order quantity: 1 pce
Order no. N31394

Thermos Mug

Description:
Closing lid, company logo and block logo.

Min. order quantity: 1 pce
Order no. N31395

Office Cup

Description:
Coffee cup, porcelain. Outside colour cyan, inside white, with Bauer logo. Outside engraving: Bauer logo. Capacity: 0.4 ltr, diameter: 98 mm, weight: 370 g.

Min. order quantity: 1 pce
Order no. N35537

Thermo Mug

Description:
Porcelain, double walled. Metalcoating outside in blue, inside white. Outside engraving: Bauer logo. Capacity: 0.3 ltr, diameter: 90 mm, weight: 420 g. With lockable top cover, made of natural rubber.
Min. order quantity: 1 pce
Order no. N35538

BROCHURES Breathing Air

Aerotest Simultan HP

Number of pages: 2
Min. order quantity:: 100 pce

German:	Order no. N33341
English:	Order no. N33342
French:	Order no. N33343

Aero-Guard

Number of pages: 2
Min. order quantity:: 100 pce

German:	Order no. N33020
English:	Order no. N33021
French:	Order no. N33022
Russian:	Order no. N33051

B-Safe

Number of pages: 4
Min. order quantity:: 100 pce

German:	Order no. N33058
English:	Order no. N33059
French:	Order no. N33060
Russian:	Order no. N33050

B-Trox

Number of pages: 8
Min. order quantity:: 50 pce

German:	Order no. N34461
English:	Order no. N34460

Compact Line

Number of pages: 4
Min. order quantity:: 100 pce

German:	Order no. N33033
English:	Order no. N33034
French:	Order no. N33035
Swedish:	Order no. N33054

Kap-Verticus-Range

Number of pages: 4
Min. order quantity:: 100 pce

German:	Order no. N33061
English:	Order no. N33062

Mini Verticus III

Number of pages: 4
Min. order quantity:: 100 pce

German:	Order no. N33027
English:	Order no. N33028
Russian:	Order no. N33042
Spain:	Order no. N33049
Swedish:	Order no. N33055

Profi-Line II

Number of pages: 4
Min. order quantity:: 100 pce

German:	Order no. N33015
English:	Order no. N33016
French:	Order no. N33017
Russian:	Order no. N33041

PE 100

Number of pages: 2
Min. order quantity:: 100 pce

German:	Order no. N33368
English:	Order no. N33369
French:	Order no. N33370
Russian:	Order no. N33355

PE 200-320 TE/HE

Number of pages: 4
Min. order quantity:: 100 pce

German:	Order no. N33045
English:	Order no. N33046
French:	Order no. N33364
Russian:	Order no. N33367

PE 320-680

Number of pages: 4
Min. order quantity:: 100 pce

German:	Order no. N33047
English:	Order no. N33048
French:	Order no. N33065

PE 300-850

Number of pages: 4
Min. order quantity:: 100 pce

German:	Order no. N34458
English:	Order no. N34459

Configuration Catalogue

Configuration Catalogue Breathing Air

Number of pages: 32
Min. order quantity:: 50 pce

German:	Order no. N33371
English:	Order no. N33372

Overview Catalogue Breathing Air

Number of pages: 4
Min. order quantity:: 100 pce

German:	Order no. N33356
English:	Order no. N33357
French:	Order no. N33358

Industry | CNG

Mini Verticus III

Number of pages: 4
Min. order quantity:: 100 pce

German:	Order no. N33036
English:	Order no. N33037

Verticus N2

Number of pages: 4
Min. order quantity:: 100 pce

German:	Order no. N33043
English:	Order no. N33044
Russian:	Order no. N33053

Air cooled K22–K28

Number of pages: 8
Min. order quantity:: 50 pce

German:	Order no. N35000
English:	Order no. N35001

Water cooled K23–K52

Number of pages: 8
Min. order quantity:: 50 pce

German:	Order no. N33063
English:	Order no. N33064
Russian:	Order no. N33065

G-Range for Helium

Number of pages: 12
Min. order quantity:: 50 pce

German:	Order no. N33023
English:	Order no. N33024

GIT-Systems

Number of pages: 6
Min. order quantity:: 100 pce

German:	Order no. N33362
English:	Order no. N33363

CNG | Military / Defense

MFS CFS Fuel Stations

Number of pages: 6
Min. order quantity:: 100 pce

German: **Order no. N33018**
Russian: **Order no. N33019**

Military Applications

Number of pages: 6
Min. order quantity:: 100 pce

German: **Order no. N35862**
English: **Order no. N35863**

Navy KAP-HN

Number of pages: 4
Min. order quantity:: 100 pce

German: **Order no. N33352**
English: **Order no. N33353**

Sports | Navigation | Oil and GaS

B-Master

Number of pages: 2
Min. order quantity:: 100 pce

German: **Order no. N33354**
English: **Order no. N33355**

Shooting Compressor S30

Number of pages: 4
Min. order quantity:: 100 pce

German: **Order no. N33350**
English: **Order no. N33351**

Navigation Compressors

Number of pages: 2
Min. order quantity:: 100 pce

German: **Order no. N35864**
English: **Order no. N35865**

Oil and Gas Applications

Number of pages: 4
Min. order quantity:: 100 pce

English: **Order no. N36037**

Air Treatment Industry

B-Kool

Number of pages: 4
Min. order quantity:: 100 pce

German: **Order no. N33344**
English: **Order no. N33345**

P-Systems

Number of pages: 8
Min. order quantity:: 50 pce

German: **Order no. N33347**
English: **Order no. N33348**
French: **Order no. N33349**

Seccant A

Number of pages: 8
Min. order quantity:: 50 pce

German: **Order no. N33025**
English: **Order no. N33026**

Image Brochures | Equipment Catalogue

Image Brochure

Number of pages: 28
Min. order quantity:: 50 pce

German: **Order no. N33031**
English: **Order no. N33032**

Controlling pressed air and gases

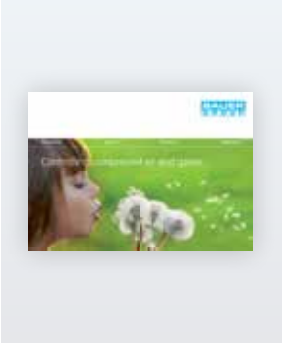

Number of pages: 24
Min. order quantity:: 50 pce

English: **Order no. N36038**

Go mobile with CNG

Number of pages: 12
Min. order quantity:: 50 pce

English: **Order no. N36043**

High Pressure Equipment Catalogue

Number of pages: 200
Min. order quantity:: 1 pce

German: **Order no. N35160**
English: **Order no. N35161**

BAUER KOMPRESSOREN

www.bauergroup.de

MEDIUM AND HIGH-PRESSURE COMPRESSORS | AIR TREATMENT & TESTING | SCREW COMPRESSORS

International
Germany
Asia | Austria | Australia | China | Egypt | France | Great Britain |
India | Italia | Japan | Middle East | Russia | USA