MYD-SAMA5D3X
User Manual

Version V1.3

Version History

Version Number	Description	**Time**
V1.0	Initial Version	2013.05
V1.1	Simplify part details; Modify the section 4.5 and 5.4 part of the compiler command	2013.08
V1.2	Correct mistakes; Add 7.0-inch LCD's support	2013.08
V1.3	Updating 256MB DDR2 support features; Updating kernel compiling method; Updating images and sources path; Correct mistakes; Remove *Chapter 3 MDK Example Code*	2013.09

Directory

Chapter 1 Product Overview

1.1 Product Description

MYIR has lunched MYD-SAMA5D3X series boards which are based on Atmel ATSAMA5D3X series processor (SAMA5D31, SAMA5D33, SAMA5D34, SAMA5D35 based on ARM Cortex-A5). Running at up to 536 MHz, carries 256MB NandFlash, 4MB Data-Flash(16bits), 256/512MB DDR2 SDRAM. It has rich peripheral interfaces: High-speed USB2.0, Audio input, audio output, LCD interface, CAN interfaces, JTAG debug interface, Serial port and Micro SD card interface. The MYD-SAMA5D3 board support Linux 3.6.9 and Android 4.0.4 and deliver full periphery driver source code help users to make quick software application and evaluation for ATMEL SAMA9D3 ARM Cortex-A5 processors.

1.2 Product Overview

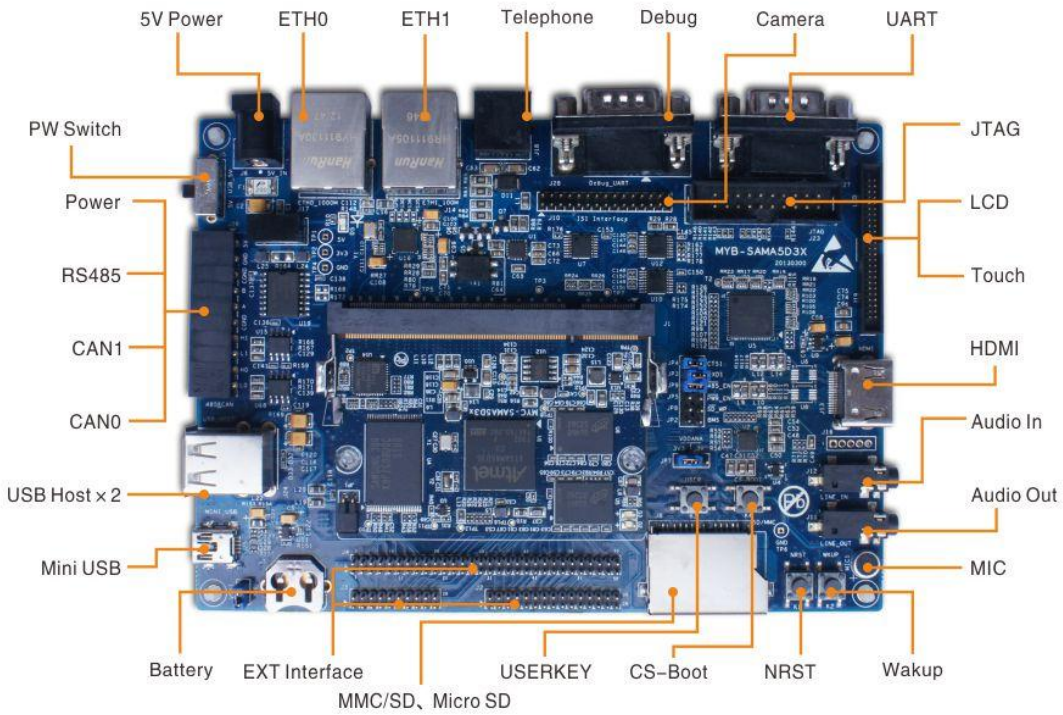

Figure 1-1

1.3 Product Features

The MYD-SAMA5D3 integrates components and periphery interfaces for developing ARM Cortex-A5, and its key features as follow:

- High-performance architecture - Based on the ARM Cortex-A5 core with floating-point unit, the SAMA5D3 series is ideal for applications requiring high-precision computing and fast data processing. Features a 64-bit internal bus architecture and 32-bit wide DDR controller running up to 166MHz that offers up to 1328MB/s of bandwidth.
- Market-leading low power consumption - Ideal for battery- operated applications, the SAMA5D3 series consumes less than 200mW when running at maximum speed and under 0.5mW in low-power mode.
- Comprehensive peripheral set for connectivity and user interface applications - Includes Gigabit and 10/100/1000 Ethernet, up to three HS USB ports, dual CAN, three SDIO/SD/MMC, UARTs, SPIs, TWIs, soft modem, LCD controller with graphics accelerator, camera interface, 12-bit ADC, 32-bit timers and more.
- State-of-the-art security - Includes secure boot, Advanced Encryption Standard (AES)/Triple Data Encryption Standard (DES) encryption engine, Secure Hash Algorithm (SHA) and True Random Number Generator (TRNG).
- Low system cost - the 0.8mm ball pitch package reduces the PCB design complexity. A simple power management scheme and impedance matching on DDR lines reduce the need for external components. Three USB ports save the cost of an external USB hub.

The basic features of MYD-SAMA5D3X are as follow:

Electrical parameters:

- Working temperature
  - Industrial level Temperature: -40°C ~ 85°C
  - commercial level temperature: 0°C ~ 70°C
- Operating humidity: 0 to 90%
- Electrical Specifications: +5V power supply
  - Base Board: +5V power supply
  - CPU module: +3.3V power supply from SODIMM200 DDR2 connector
- Mechanical Dimensions:
  - Base Board: 154mm x 110 mm
  - CPU module: 45mm x 67.6 mm

Processor:

- SAMA5D31//D33/D34/D35 (32 bits ARM v7-A Thumb2 processor) runs at up to 536MHz
- 32KB Data Cache, 32KB Instruction Cache

Memory:

- 160KB chip ROM, 128KB chip SRAM
- 512MB DDR2 SDRAM (256MB DDR2 for option)
- 256MB Nandflash
- 16MB NorFlash(16 bits)
- 4MB DataFlash

Audio and Video Interface:

- An 3.5mm Audio Input Interface
- An MIC input interface
- A Two-channel 3.5mm Audio Output Interface

Transmission Interface:

- Standard JTAG Interface
- Micro SD Card Interface
- SD/MMC Interface
- Serial Ports
  - 1x DBGU Port (Debug Unit)

- 1xUSART(5 pin)

- Two CAN Interfaces (Only MYD-SAM A5D34 and MYD-SAMA5D35 have CAN Interface)
- 2 High-speed USB HOST Interfaces
- A Mini USB Host/Device Interface
- Ethernet MAC

processor	SAMA5D31	SAMA5D33	SAMA5D34	SAMA5D35
Ethernet	10/100 M	10/100/1000 M	10/100/1000 M	Dual Ethernet

LED Indicator:

- A Power Indicator (CPU module: Red)
- A Users Light/System Heartbeat Light (CPU module: Blue)
- A Power Indicator (Base Board: Red)

1.4 Product Packing

No	Name	Number	Note
1	MYD-SAMA5D3X Development Board	1	Base Board+CPU module
2	1.5 Meters Crossover Cable	1	
3	1.5 Meters Mini USB 2.0 Cable	1	
4	5V/2A DC Power adapter	1	
5	Serial Cable	1	DB9-To-DB9 9pins
6	Product DVD	1	Include Schematic (PDF), User Manual, Source Code, etc.
7	4.3/7.0 inch LCD Touch Screen	1	optional

Chapter 2 Hardware Resource Introduction

2.1 CPU module + Base Board Resources Overview

MYD-SAMA5D3X board features are shown in table2-1:

Name		5D31	5D33	5D34	5D35
Processor		Atmel SAMA5D31/5D33/5D34/5D35(ARM Cortex-A5 core, Frequency at up to 536MHz)			
Memory		512MB DDR2 SDRAM (256MB DDR2 for optional)			
Flash		256MB Nand-Flash, 4MB Data-Flash, 16MB NorFlash(16 Bits)			
USB	USB HOST	2	2	2	2
	Mini USB Host / Device	1	1	1	1
Audio	Audio Input	1	1	1	1
	MIC Input	1	1	1	1
	Audio Output	1	1	1	1
Network	ETH 10/100M Ethernet Port	1	0	0	1
	ETH 1000M Ethernet Port	0	1	1	1
Serial	DBGU Serial	1	1	1	1
	USART1	1	1	1	1
JTAG	JTAG Interface	1	1	1	1
LCD	Support 4.3-inch Touch Screen	1	1	1	0

RTC	Real Time Clock On Board and backup battery	1	1	1	1
Extended Interface	20 Pins User Extended Interface	1	1	1	1
	30 Pins User Extended Interface	1	1	1	1
	60 Pins User Extended Interface	1	1	1	1
Power	5V Power Input	1	1	1	1
SD Card	Micro SD Interface	1	1	1	1
SD/MMC	SD/MMC Interface	1	1	1	1
CAN	CAN Interface	0	0	2	2
RS485	RS485 Interface	1	1	1	1
Button	User Button	1	1	1	1
	System Button	3	3	3	3

Table 2-1

2.2 CPU module Introduction

About CPU module details please refer to the user manual "MYD- SAMA5D3X CPU module user manual. PDF".

2.2.1 CPU module architecture and CPU features

(1) CPU module architecture is shown in figure 2-1:

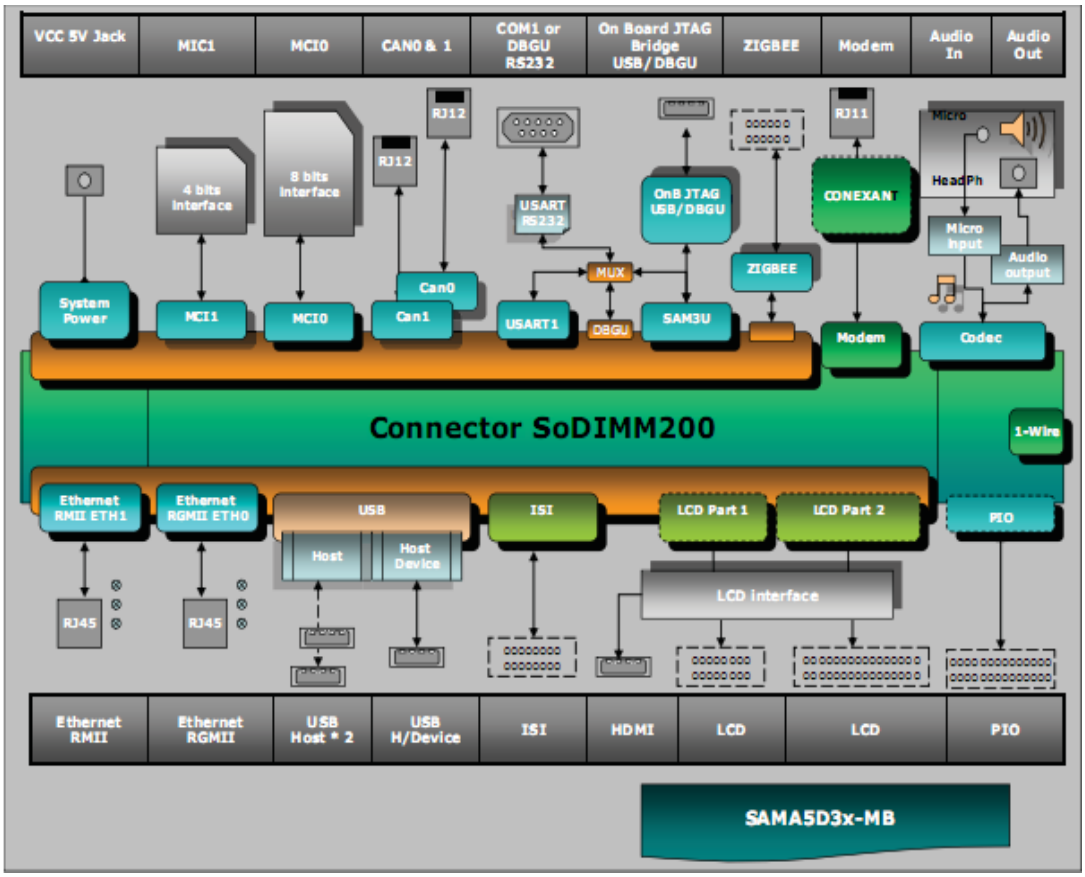

Figure 2-1

(2) CPU

The Atmel SAMA5D3 series is a high-performance, power-efficient embedded MPU based on ARM Cortex-A5, achieve 536MHZ with power consumption levels below 0.5mW in low-power mode. The device features a flexible size instruction and data caches, Memory Management Unit (MMU) and Floating-Point Unit (FPU). The Cortex-A5 processer implements the ARM-v7 VFPv4-D16 architecture and runs 32-bits ARM instructions, 16-bits Thumb instructions and 8-bit Java byte codes in Jazelle state. The processor has the ARM, Thumb ThumbEE, Jazelle states controlled by the T bit and J bit in the CPSR.

2.2.2 DDR2 SDRAM

DDRAM device key features:

- VDD=+1.8V±0.1V, VDDQ= +1.8V ±0.1V
- All inputs and outputs are compatible with SSTL_18 interface

- Auto refresh and self-refresh
- Organizational structure:8 blanks, Page size: 128 Meg x 16 (16 Meg x 16 x 8 banks)
- Programmable CAS latency (CL)
- Programmable CAS additive latency (AL)
- Programmable burst lengths: 4 or 8
- Adjustable data-output drive strength

2.2.3 Serial DATAFLASH

4MB dataflash key features:

- Single 2.7V-3.6V Supply
- Serial Peripheral interface (SPI) Compatible
  - Support SPI Modes 0 and 3
- 70 MHz Maximum Clock Frequency
- Flexible, Uniform Erase Architecture
  - 4-Kbyte Blocks,32-Kbyte Blocks,64-Kbyte Blocks, Full Chip Erase
- Individual Sector Protection with Global Protect/Unprotect Feature
  - 64-Kbyte Physical Sectors
- Hardware Controlled Locking of Protected Sectors
- Flexible Programming
  - Byte/Page Program(1 to 256 Bytes)
- Automatic Checking and Reporting of Erase/Program Failures
- JEDEC Standard Manufacture and Device ID Read Methodology
- Low Power Dissipation
  - 7 mA Active Read Current (Typical)
  - 15 µA Deep Power-Down Current (Typical)
- Endurance:100,000 Program/Erase Cycles
- Data Retention: 20 Years
- Complies with Full industrial Temperature Range

- Industry Standard Green (Pb/Halide-free/RoHS Compliant) Package Options
  - 8-lead SOIC (200 mil wide)
  - 16-lead SOIC (300 mil wide)

2.2.4 NORFLASH & NANDFLASH

(1) 16MB norflash key features:

- Organization:
  - Page size: 128K Bytes(4Blocks top to bottom)
  - Block size: 32k Bytes
- Read Operation:
  - Random Read: 25 us
  - Serial Access: 25 ns
- Fast Write Cycle Time:
  - Page Program time: 200 us(Typ)
  - Block Erase Time: 20 us (Typ)
- Power:
  - VCC (core): 1.7 V - 2.0 V
  - VCCQ (I/O): 1.7 V - 3.6 V
- Endurance: 100,000 Program/Erase Cycles
- Data Retention: 10 Years

(2) 256MB nandflash key features:

- Organization:
  - Page size: 2K + 64 Bytes
  - Block size: 128K + 4K Bytes (64 Pages)
  - Plane size: 1056Mb((128K+4K)x1024Blocks)
  - Device size: 2112Mb(1056Mbx2planes)
- Array performance
  - Read page : 25 us
  - Program page:200 us(TYP:1.8v,3.3V)

- Erase block: 700us(TYP)

- Power: 2.7V - 3.6V
- Endurance: 100,000 Program/Erase Cycles
- Data Retention: 10 Years
- 48-pin TSOP type1,CPL package
- WP# signal: Write protect entire device

2.2.5 ETHERNET Module

ETHERNET key features are as follows:

- Single-chip 10/100/1000Mbps IEEE compliant Transceiver
- RGMII1.3 Interface support
- 25MHZ crystal is used to generate all required clocks
- Power down and power saving modes
- MDO/MDIO Management Interface
- 48-pin (5mm x 5mm) QFN package
- Power supply
  - VCC (core): 1.2 V
  - VCCQ (I/O): 3.3 V /2.5 V

2.3 Base Board Introduction

2.3.1 Power supply & Push button

(1) Device power supply is shown in figure 2-2

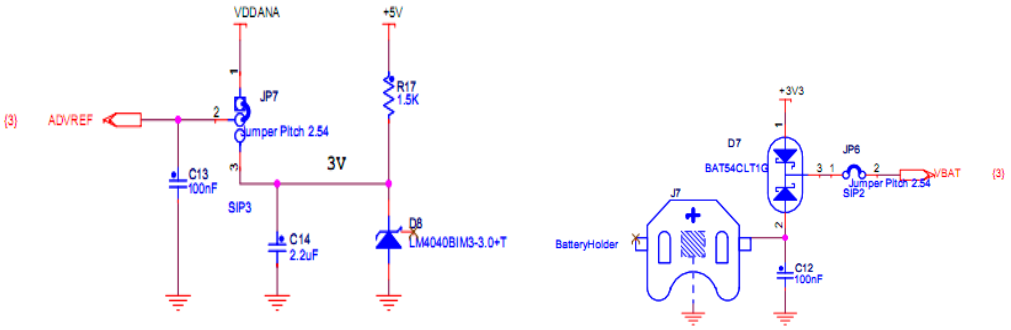

Figure 2-2

(2) Push button is shown in figure 2-3

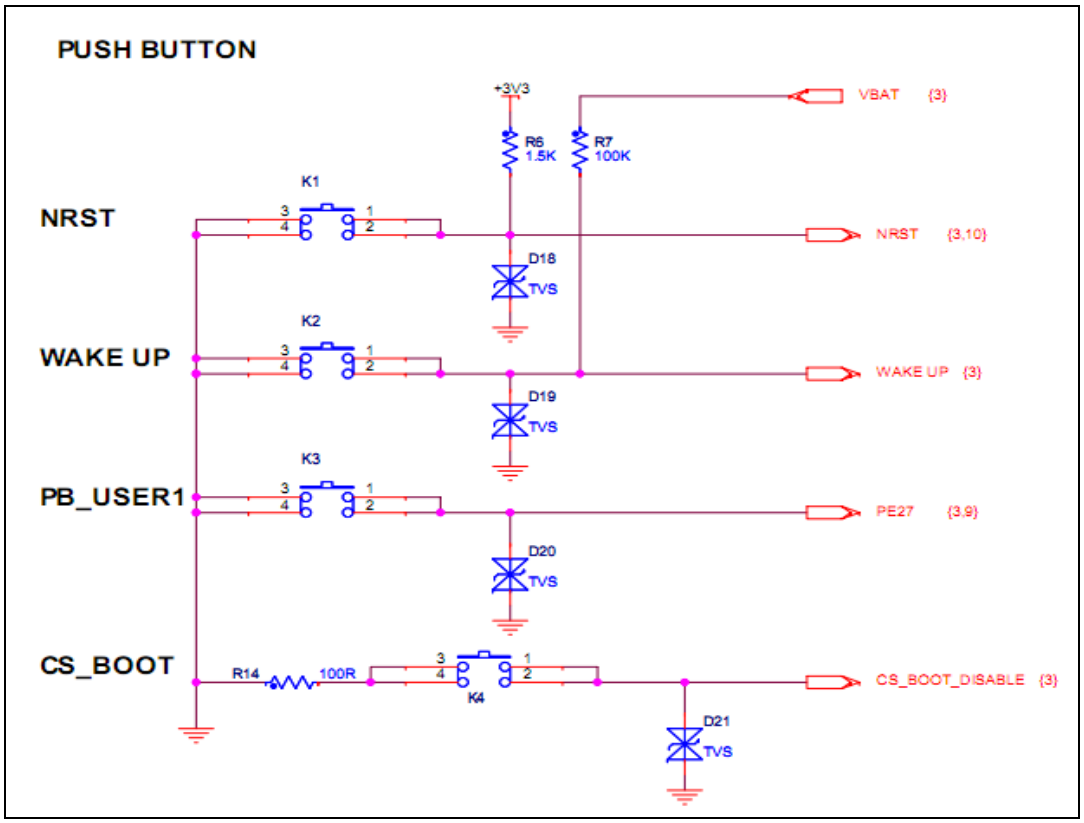

Figure 2-3

2.3.2 CAN

SAMA5D34 and SAMA5D35 have CAN receive/send interface. Its key features are as follows:

- Fully compatible with the “ISO 11898” standard
- High speed (up to 1Mbaud)
- Very low Electro Magnetic Emission (EME)
- Different receiver with wide common-mode range for high Electro Magnetic Immunity (EMI)
- An unpowered node does not disturb the bus lines
- Transmit Data (TxD) dominant time-out function
- Silent mode in which the transmitter is disabled
- Bus Pins protected against transients in an automotive environment

- Input levels compatible with 3.3V and 5V devices
- Thermally protected
- Short-circuit proof to battery and to ground
- At least 110 nodes can be connected

CAN receive/send circuit figure 2-4:

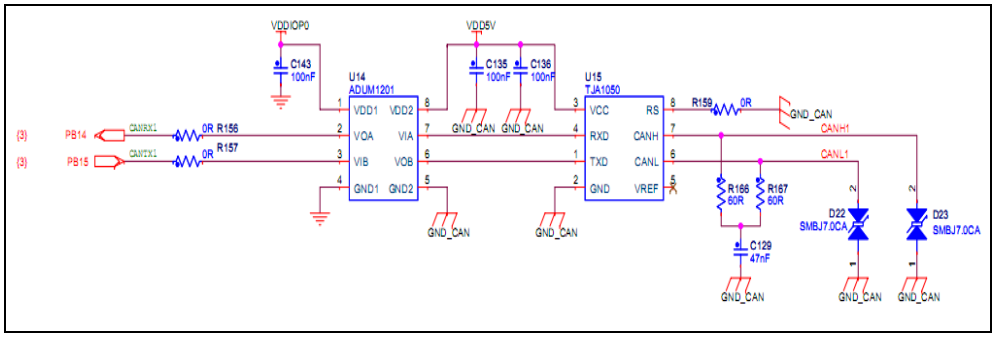

Figure 2-4

2.3.3 RS485

RS485 receive/send key features:

- Electrical data isolation
- Compliance to ANSI TIA/EIA RS-485-A-1998 and ISO 8482:1987(E)
- Transfer speed reach high as 500kbps
- low power consumption, current <=2.5mA
- compatible 5v and 3v power supply (VDD1)
- Bus device numbers <=256
- work temperature: -40°C to +85°C

RS485 circuit is shown in figure 2-5.

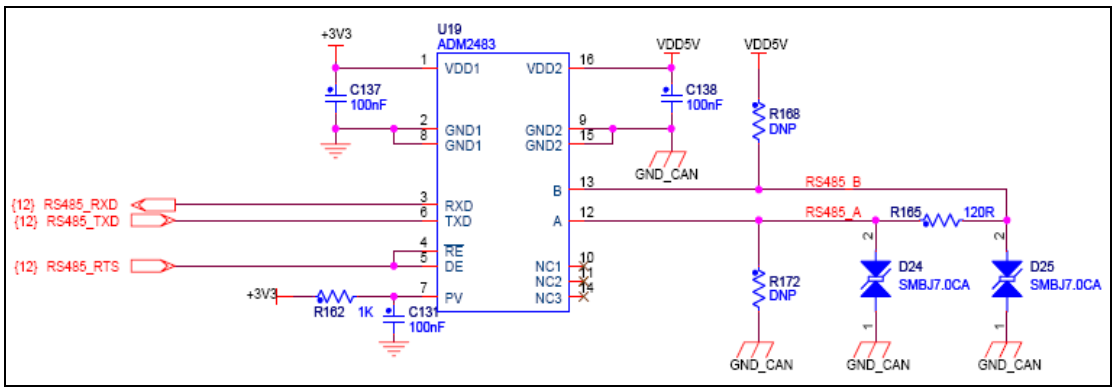

Figure 2-5

2.3.4 HSMCI Module

HSMCI Module is shown in figure 2-6:

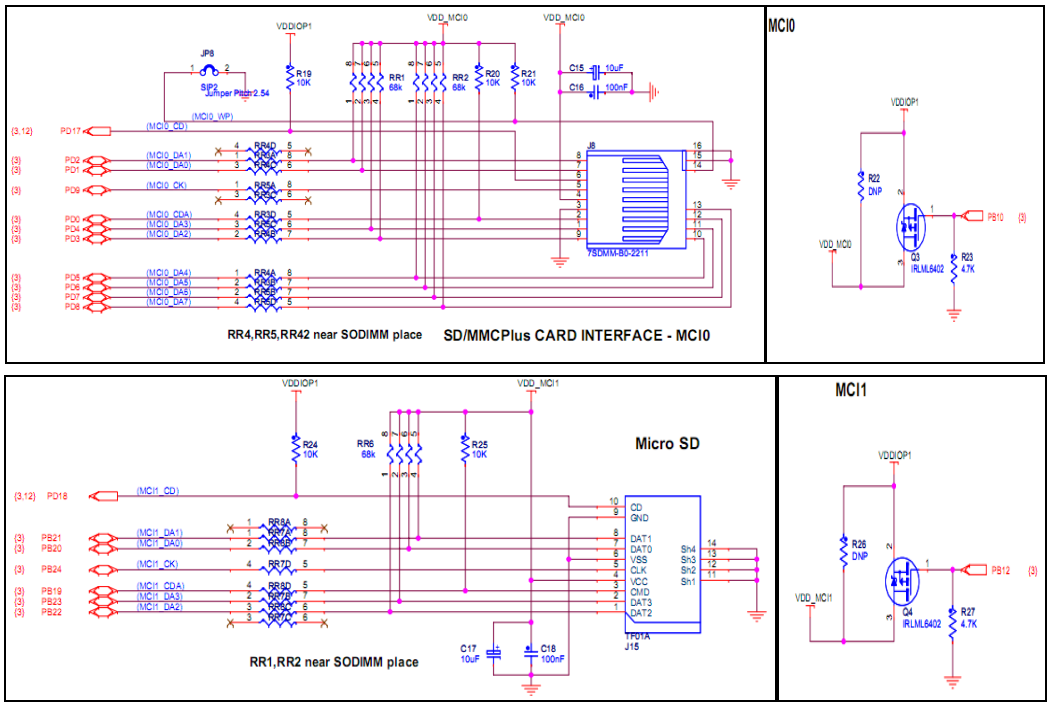

Figure 2-6

2.3.5 SODIMM Interface

(1) LCD Hardware interface is shown in figure 2-7:

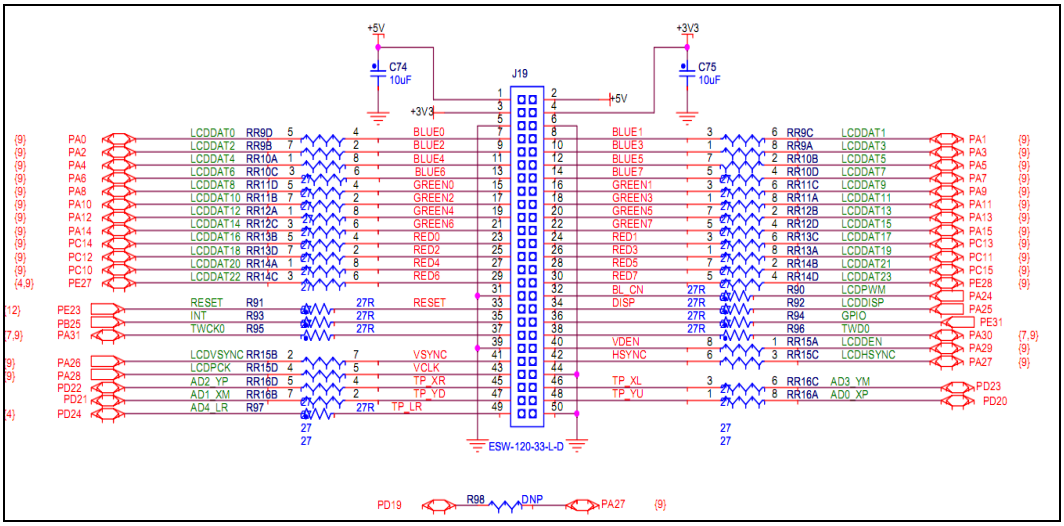

Figure 2-7

(2) JTAG interface is shown in figure 2-8:

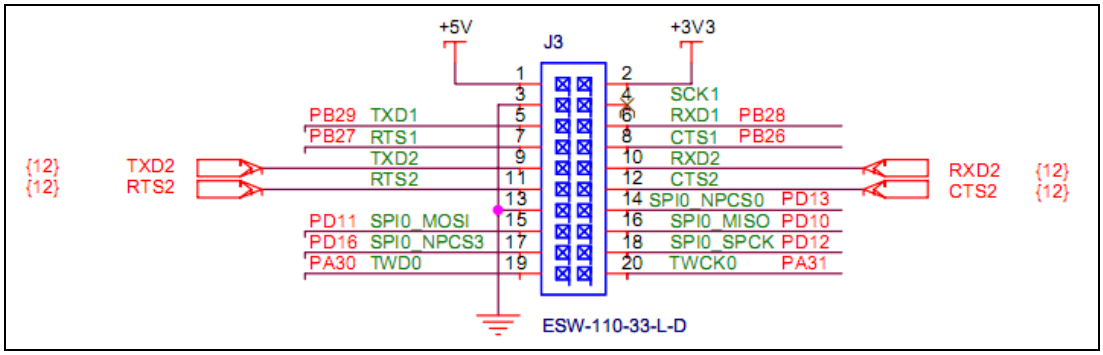

Figure 2-8

(3) User interface is shown in figure 2-9:

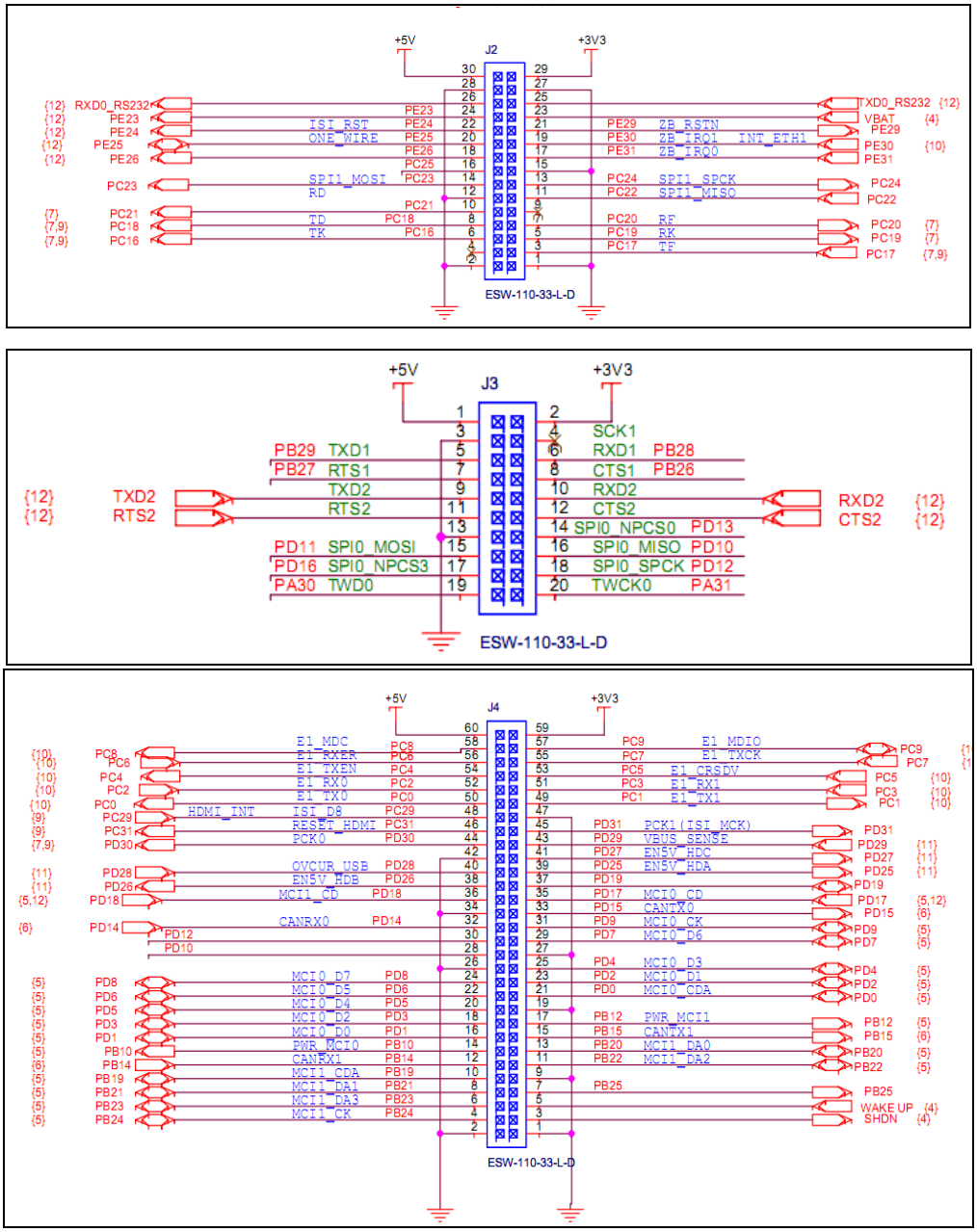

Figure 2-9

(4) ISI interface is shown in figure 2-10:

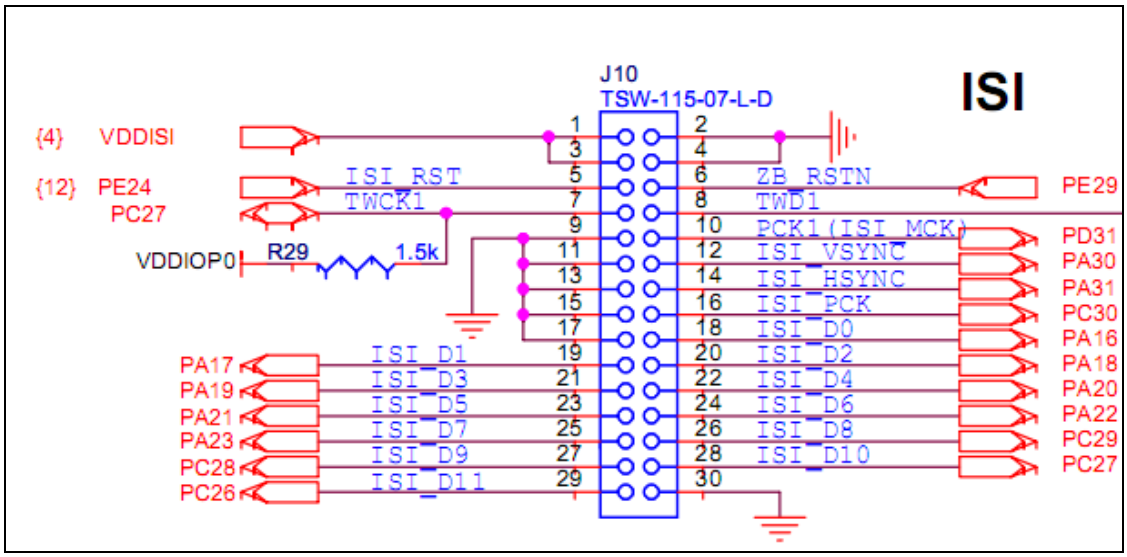

Figure 2-10

2.3.6 Smart DAA Module

Smart DAA Module is shown in figure 2-11:

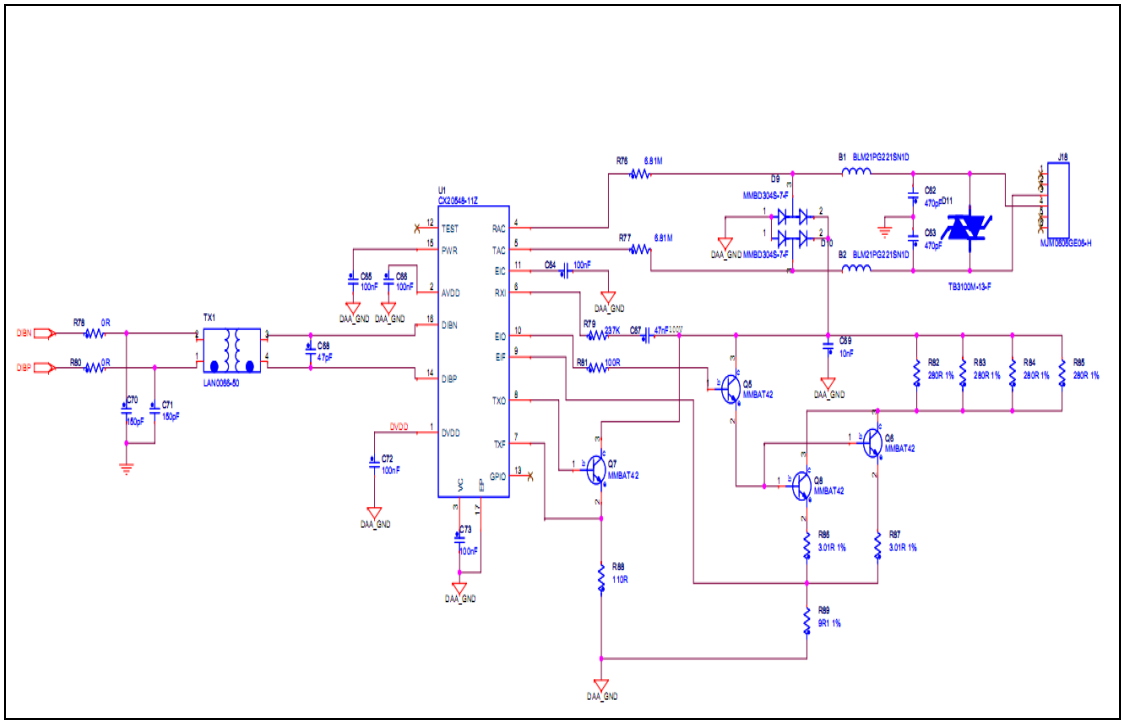

Figure 2-11

2.3.7 Audio Module

- Audio Performance
  - 91dB SNR ('A' weighted @ 48kHz) ADC
  - 96dB SNR ('A' weighted @ 48kHz) DAC
- ADC and DAC Sampling Frequency: 8kHz - 96kHz
- 2 or 3-Wire MPU Serial Control Interface
- Programmable Audio Data interface Modes
  - I^2S, Left, Right Justified or DSP
  - 16/20/24/32 bit Word Lengths
  - Master or Slave Clocking Mode
- Stereo sound output and input
- The output and input volume control
- Highly Efficient Headphone Driver
- Playback only 3.0mW
- Analog Pass Through Power only 2.4mW
- 32-PIN QFN package(4 x 4mm, 0.4mm pitch)

Circuit is shown in figure 2-12:

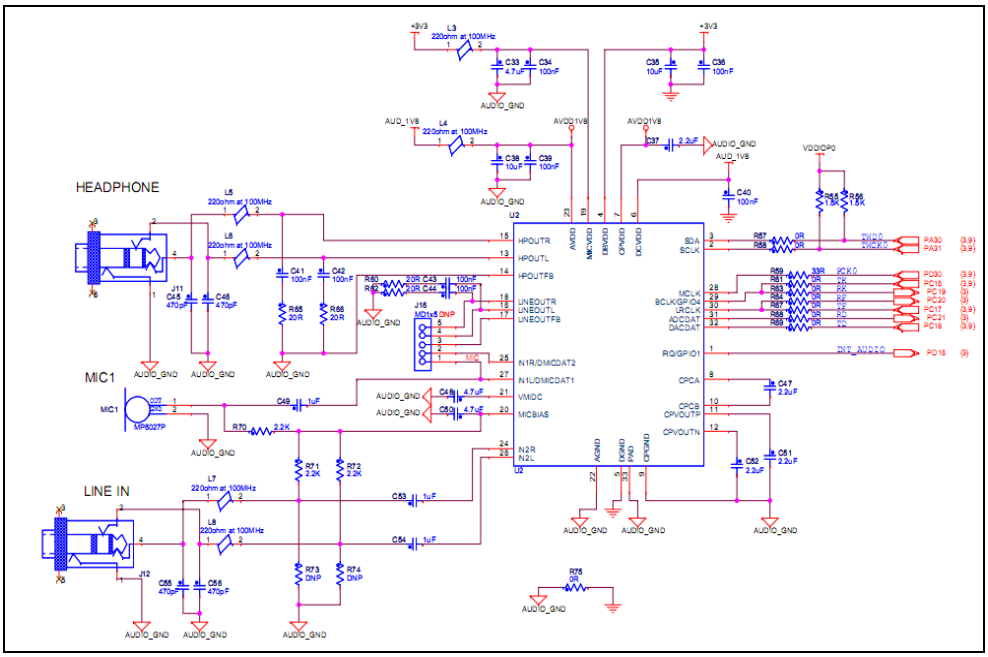

Figure 2-12

2.3.8 USB Module

(1) USB HOST mode key features are as follows:

- 110mΩ (5V Input) High-Side MOSFE Switch
- 500mA Continuous Load Current per Channel
- 110µA Typical On-State Supply Current
- 1µA Typical Off-State Supply Current
- Current-Limit/Short Circuit Protection
- Thermal Shutdown Protection under Overcurrent Condition
- Under voltage Lockout Ensures that Switch is off at Start Up
- Output can be Forced Higher than Input(Off-State)
- Open-Drain Fault Flag
- Slow Turn ON and Fast Turn OFF
- Enable Active-High or Active-Low

USB HOST Interface circuit is shown in figure 2-13:

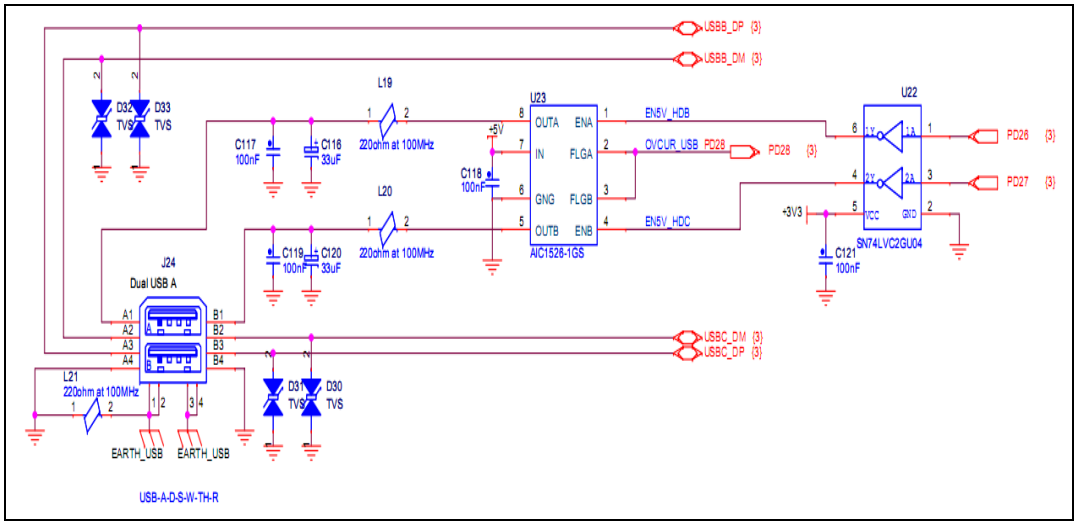

Figure 2-13

(2) mini-USB Host / Device key features are as follows:

- 70-mΩ High-Side MOSFET
- 500 mA Continuous Current
- Thermal and short-Circuit Protection
- Accurate Current Limit(0.75A min, 1.25 A max)

- Operating Range:2.7V to 5.5V
- 0.6-ms Typical Rise Time
- Deglitched Fault Report
- Bidirectional Switch
- Ambient Temperature Range: -40°C to 85°C
- ESD Protection

Mini-USB circuit is shown in figure 2-14:

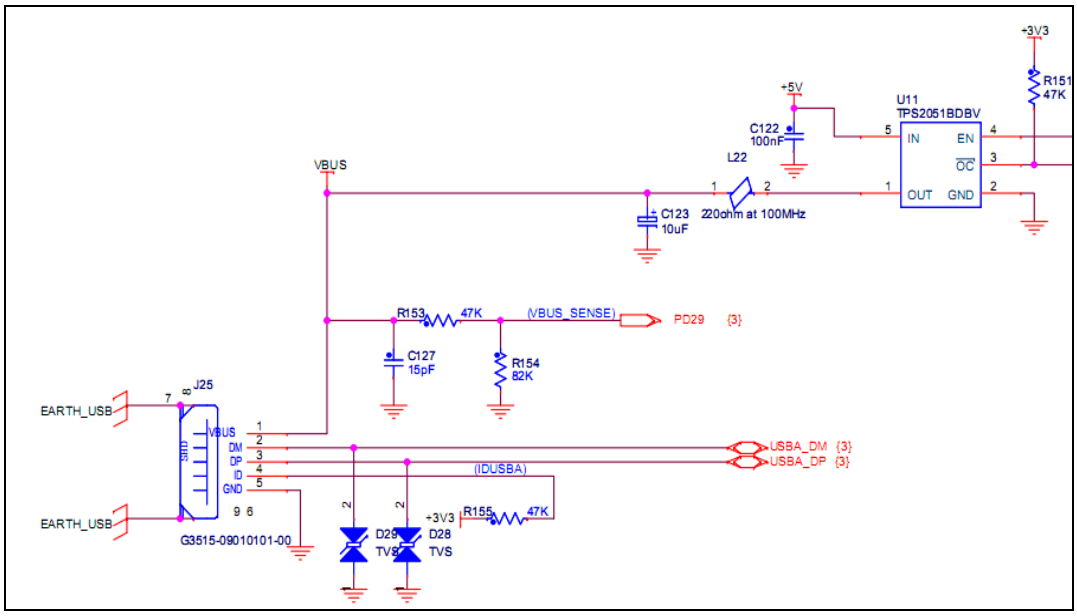

Figure 2-14

2.3.9 ETHERNET Module

ETHERNET key features are as follows:

- Single-chip 10/100Mbps IEEE 802.3 compliant Ethernet Transceiver
- RGMII1.2 Interface support with 50MHz reference clock output to MAC, and option to input 50MHz reference clock
- Programmable interrupt output
- On-chip termination resistors for the differential pairs
- Baseline Wander Correction
- Power down and power saving modes
- 32-pin QFN package (5mmx 5mm)

- MDC/MDIO Management Interface for PHY register configuration
- Power supply:
  - VCC (core): 1.2 V
  - VCCQ (I/O): 3.3 V /2.5 V

ETH Module interface circuit is shown in figure 2-15:

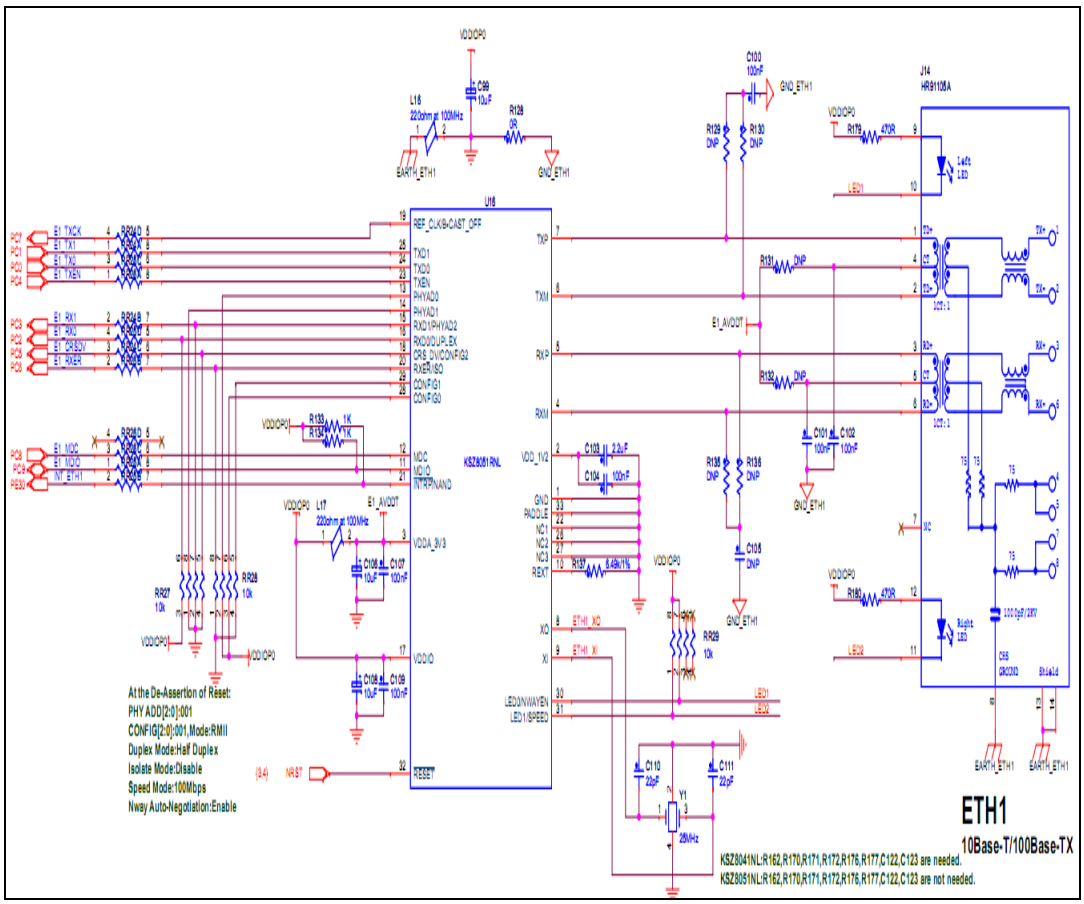

Figure 2-15

2.3.10 HDMI Module

HDMI key features:

- Support HDMI1.3,SimplayHD,DVI1.0 protocol
- DVD-AUDIO support 4xIIS input
- Support 2-channel 192HZ or 8-channel 96HZ
- Programmable DDC control system design
- Flexible interrupt register

- 72-pin QFN package (10x10mm)
- Support ICE 60958 or ICE 61937
- Support MDO/MDIO management interface
  - VCC (core): 1.2 V
  - VCCQ (I/O): 3.3 V /2.5 V

HDMI Module interface circuit is shown in figure 2-16:

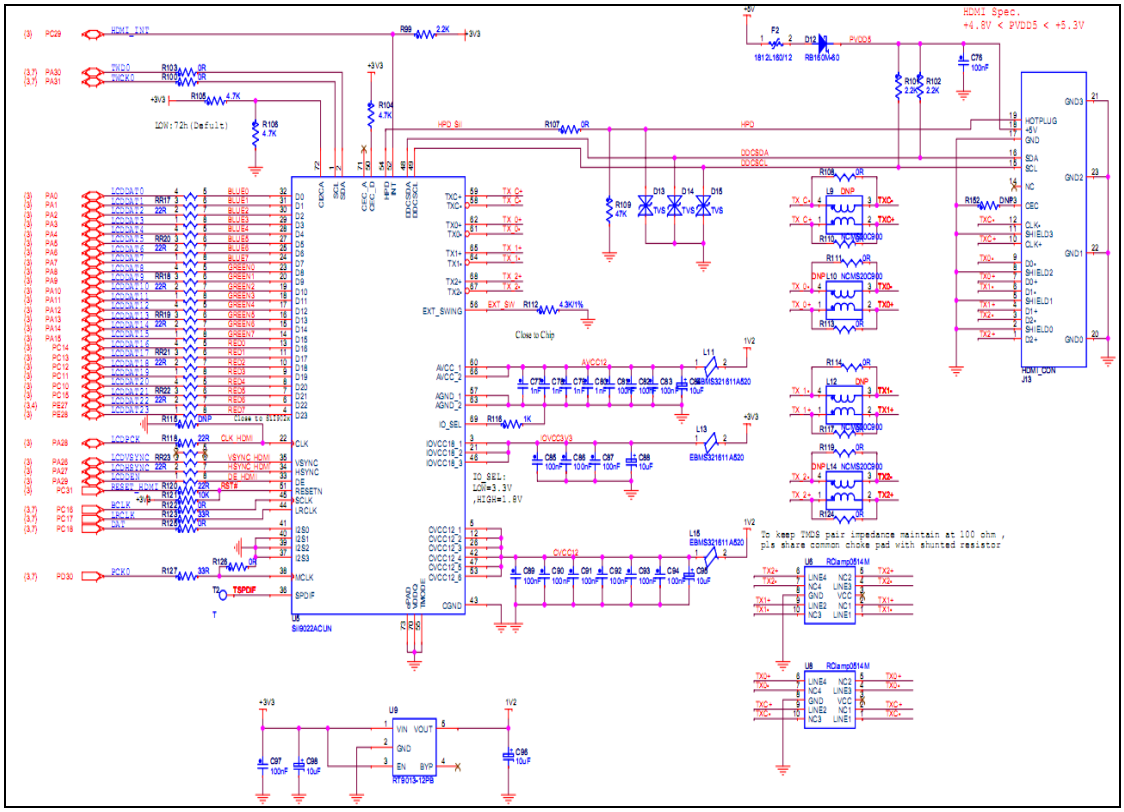

Figure 2-16

2.3.11 USART Module & DBUG

USART Module interface is shown in figure 2-17:

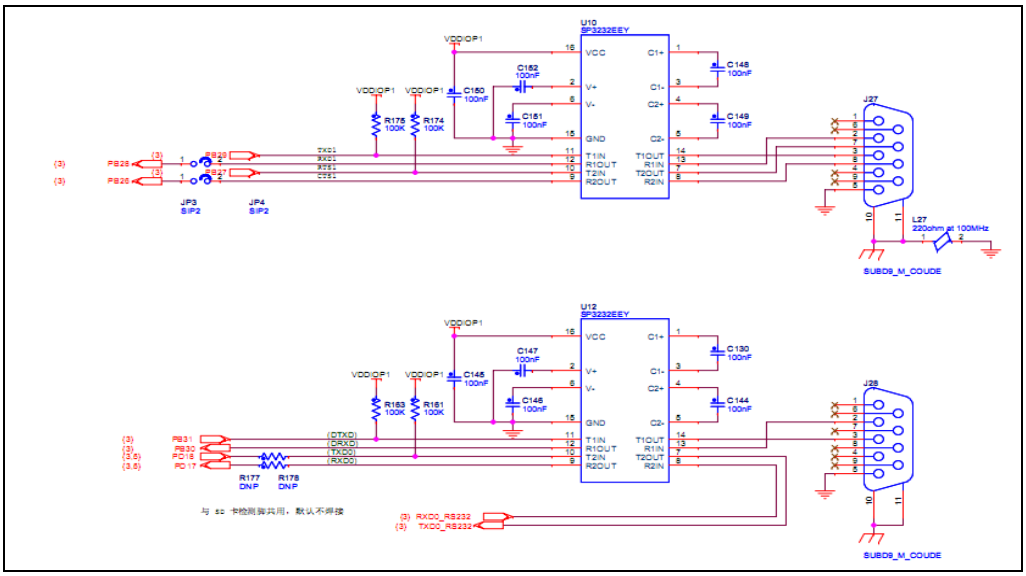

Figure 2-17

2.4 Jumper Setting

Jumper	Initial	Description	
		ON(Jumper close)	OFF(Jumper open)
JP1	OFF	Enable DataFlash(on CPU module)	Disable DataFlash(CPU module)
JP2	OFF	Boot from external Memory	Boot from ROM
JP3	ON	RXD1 signal connection	RXD1 signal close
JP4	ON	CTS1 signal connection	CTS1 signal close
JP5	ON	Power supply	Power supply by SHDN signal
JP6	ON	VBAT power supply	VBAT power close
JP7	1-2	(1-2)pin, VDDANA power supply 3V3	(2-3)pin,VDDANA power supply 3V
JP8	OFF	J8 SD card write protect	Disable J8 SD write protect
JP9	OFF	UART2 output at J26 as 485 signal	UART2 output at J3 as usart

Table 2-2

Chapter 3 Linux System Guide

3.1 Outline

This chapter describes how to run Linux system and embedded Linux applications, the process of drive development in MYD-SAMA5D3X development board. It includes the development environment to build, compile source code, image download and Linux application and driver example. The default startup is that NandFlash start the initial system. Product is Linux system at the factory and the NandFlash content distribution and some analysis are as bellows:

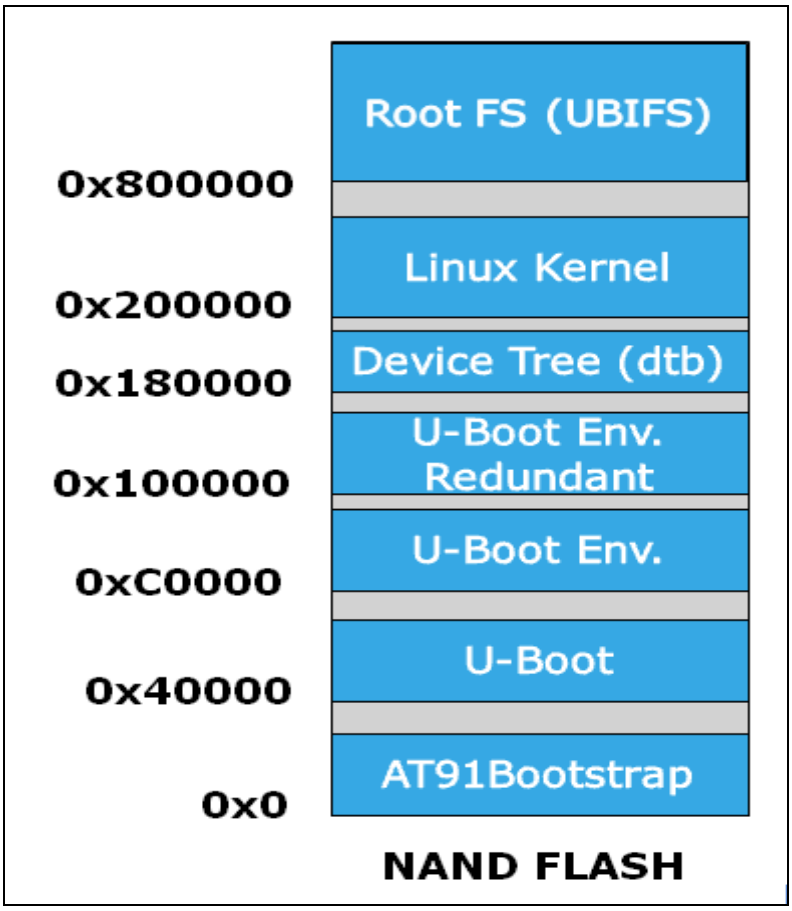

Figure 3-1

(1) Boot-Strap

After power on system, the first class boot program is copied automatically from NandFlash to internal SRAM and begins to implement by CPU. The main role is to

initialize CPU and external RAM and u-boot is copied from NandFlash to external RAM, and then jump to u-boot entry and start u-boot;

(2) u-boot

Secondary boot program, which is used for kernel image updates, load kernel and boot kernel starts;

(3) u-boot Env

Configure environment variables and provide u-boot running parameters, such as ip address, start a command, kernel boot parameters;

(4) sama5d3x.dtb

Describe hardware device tree, U-boot DTB in the start-up will Flash when the address of the file as the inlet parameters are passed to the kernel;

(5) Linux Kernel

Design Linux 3.6.9 kernel for MYD-SAMA5D3X.

(6) Root FS

The buildroot file system support QT graphical application.

3.2 Software Resources

Category	Name	Remark
Boot program	Boot Strap	First boot program, source code available
	u-boot	Secondary boot program, source code available
Linux kernel	Linux 3.6.9	Linux kernel only for MYD-SAMA5D3X hardware, source code available
Device Drivers	USB Host	USB Host driver supports the mode of OHCI and EHCI transmission, source code available
	USB Device	USB Device Driver (Gadget) , source code available
	Ethernet	Ethernet driver, source code available
	MMC / SD	MMC/SD Card driver, source code available
	NandFlash	NandFlash/Smart-Media driver, source code available

	TWI(I2C)	I2C driver, source code available
	SPI	SPI driver, source code available
	WM8904	WM8904 Audio driver, source code available
	LCD Controller	LCD driver, support 4.3 inch, Scalable 7 inch, source code available
	RTC	RTC clock driver, source code available
	Touch-Screen	4 -wire resistive touch screen driver, source code available
	PWM	PWM (pulse width modulation) driver, source code available
	USART	Serial port driver, source code available
	LED	LED driver, including GPIO LED PWM LED driver , source code available
System Files	QT	The buildroot file system support QT graphical application, source code available

Table 3-1

3.3 Start Linux System

3.3.1 Install Download Tool

Here use SAM-BA-v2.12, it can find in CD: “03-Tools\SAM-BA\sam-ba_2.12.exe”, specific installation method, please follow document “Tools\SAM-BA\sam-ba install.pdf”.

Install pack “sam-ba_2.12_patch4.exe” after “sam-ba_2.12.exe”.

3.3.2 Connect Board to PC

(1) Connect Board to PC (Please follow steps sequentially), Specific steps are as follows:

① Switch development board to 5 v (power off-position)

② Connect to PC and board through mini-USB

③ Disconnect JP1, JP2 and hold CS_BOOT button, At the same time switch development board to USB_5V. If first time the PC opportunities prompt to install board driver, Select SAM-BA installation directory under the relevant position shown in figure 3-2:

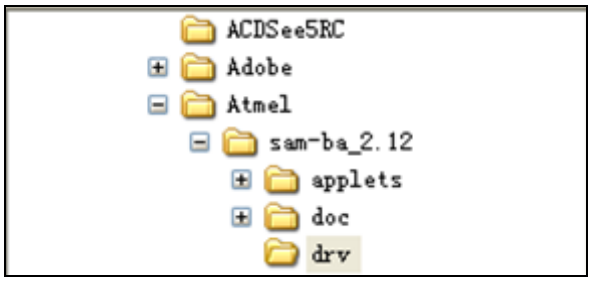

Figure 3-2

(2) If there is figure 3-3 in "computer->properties->Management-> device manager-> port", which shows board driver has been installed (According to the actual situation, here for COM4).

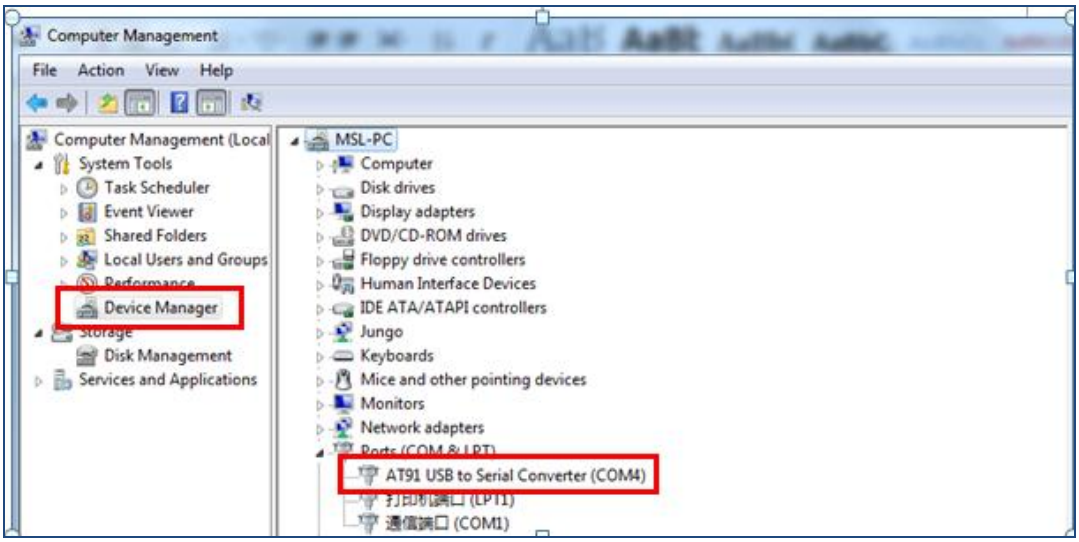

Figure 3-3

(3) Connect J28 to PC by serial cable, set up Serial Terminal: Baud rate115200, data bit 8, no parity, stop bit 1, no rts/cts. COM port number is set by actual situation.

3.3.3 Automatic Download

Note: please pull out SD card before download, otherwise an error may happen

Take downloading of image for 4.3-inch LCD and 512MB DDR2 configure as example.

After complete chapter 3.3.1 and 3.3.2, open CD-ROM directory: “02-Images\Linux-image\LCD_4.3_DDR2_512MB”, double-click “sama5d3xek_demo_linux_nandflash”. Then SAM- BA will download Linux image automatically to board. Entire download process takes about three minutes. When pop” logfile.log” automatically, reset board, there will be Linux start information.

Linux use, please refer to chapter 3.7.

3.3.4 Manual Download

Note: please pull out SD card before download, otherwise an error may occur

Take downloading of image for 4.3-inch LCD and 512MB DDR2 configure as example. Using SAM - BA manually download Linux, all image files in this section can be founded in the product directory of the CD: 02-Image\Linux-image\LCD_4.3_DDR2_512MB.

(1) After complete chapter 3.3.1 and 3.3.2, open SAM-BA to set corresponding parameters. Connection is “USB-serial\COMXX” (XX is each computer's COM port, choose it by actual situation, here is COM4) board select at91sama5d3x-ek. And then click “Connect”, specific settings and connected results are shown in figure 3-4, 3-5:

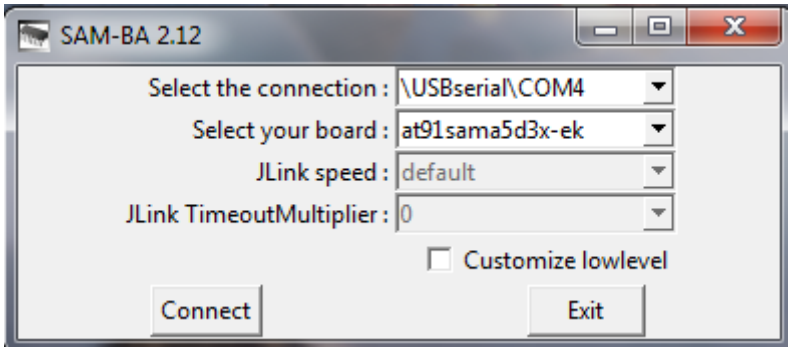

Figure 3-4

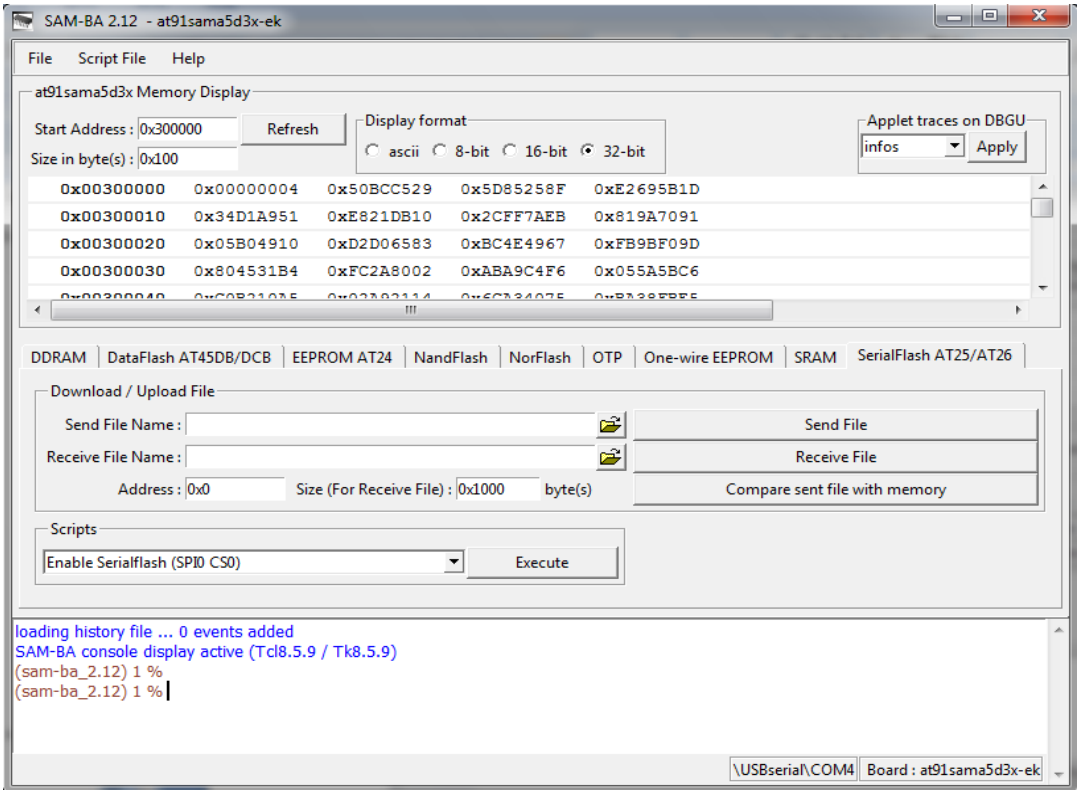

Figure 3-5

(2) Click NandFlash tab and execute Enable NandFlash Erase All, Enable OS PMECC parameters in Scripts tab (select an action and click next to "Execute" execution). When Execute Enable OS PMECC, Pop - up dialog box, click OK to use the default settings, the specific operation is as follows in figure 3-6:

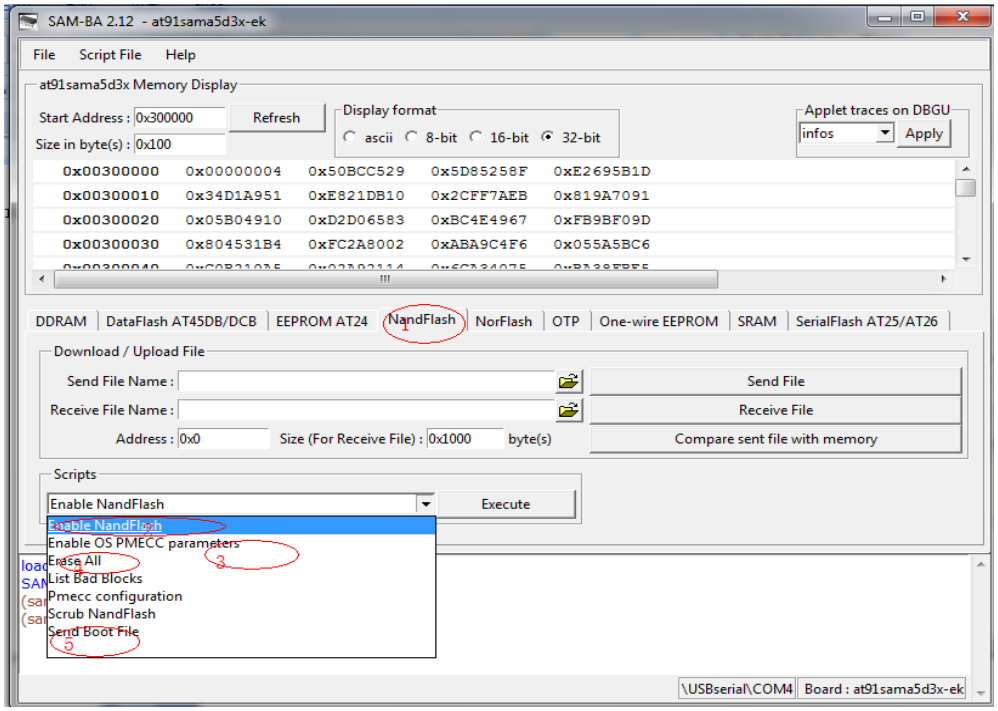

Figure 3-6

① Select "**Enable NandFlash**" in Scripts tab, and then click "**Execute**" to Enable NandFlash. Refer to figure 3-7:

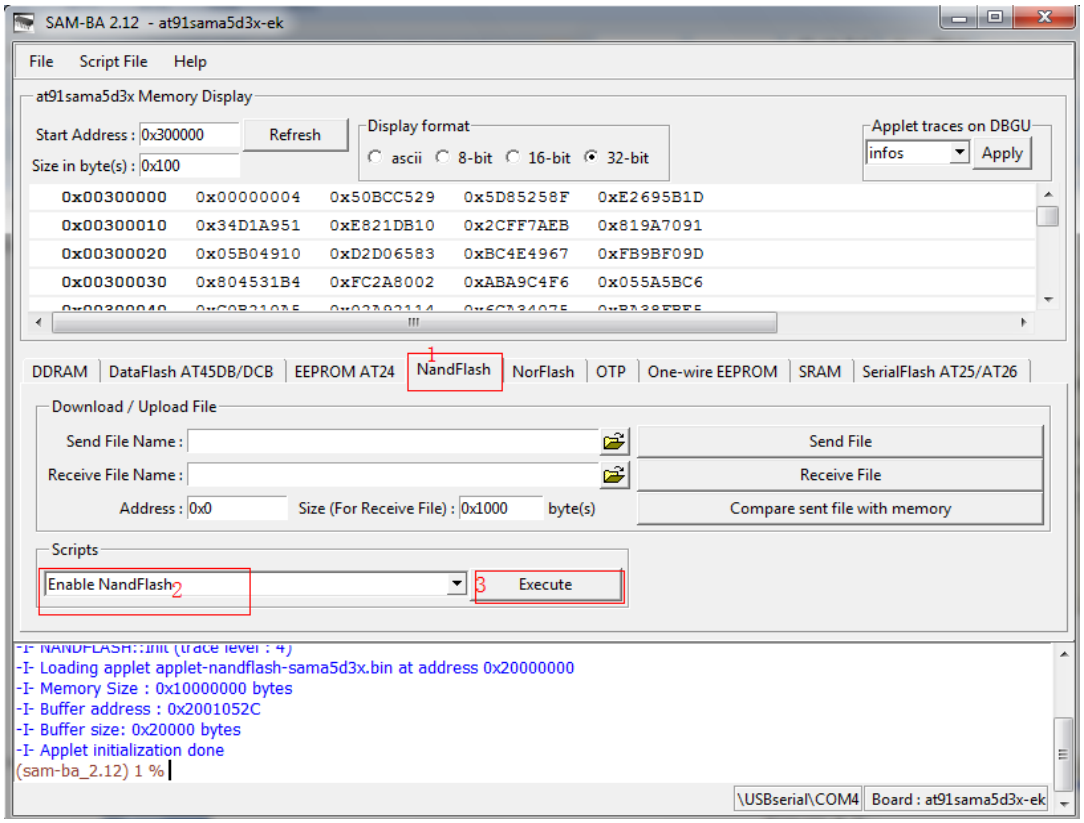

Figure 3-7

② Select **"Enable OS PMECC parameters"** in Scripts tab and then click "**Execute**", Settings refer to figure 3-8 (Note :do not select Trimffs):

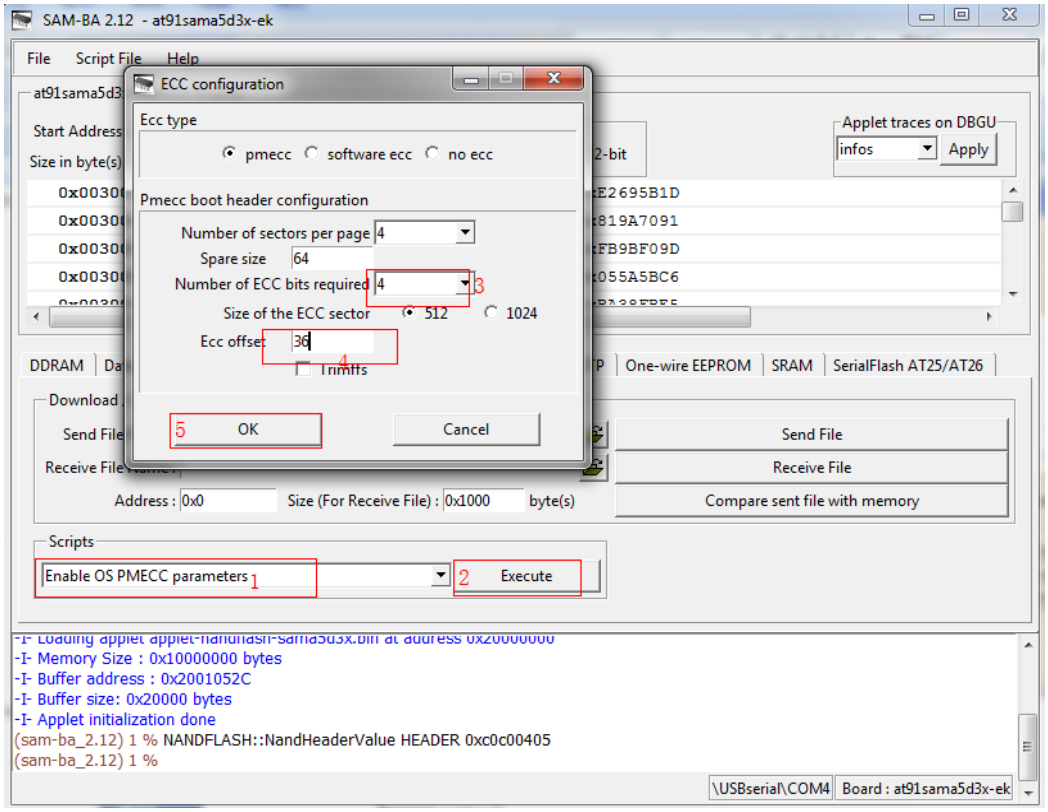

Figure 3-8

③ Select "**Erase All**" in Scripts tab, then click "**Execute**", Erase NandFlash. Refer to figure 3-9:

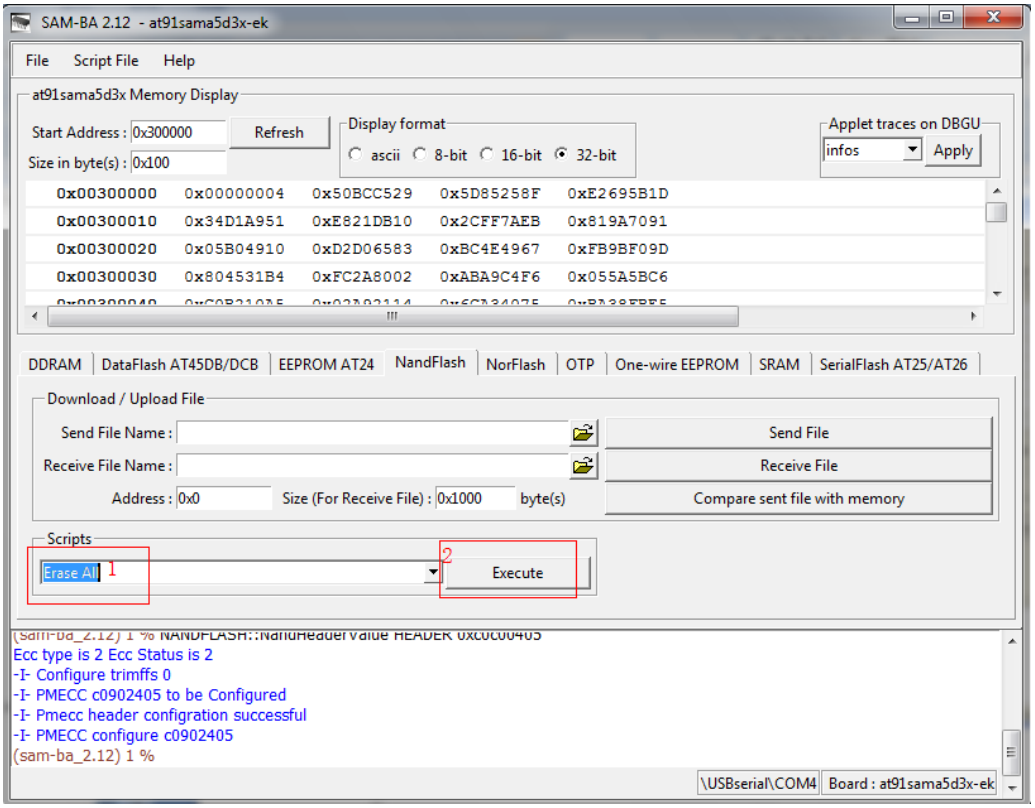

Figure 3-9

④ Download [boot. bin] refer to figure 3-10 and 3-11:

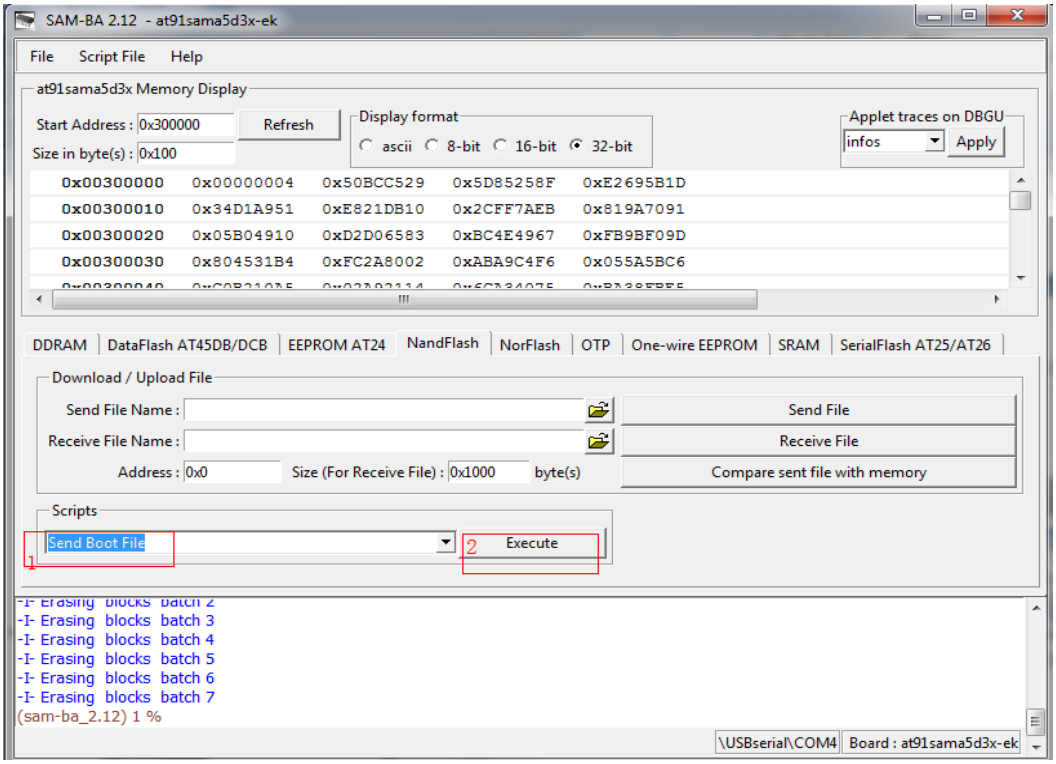

Figure 3-10

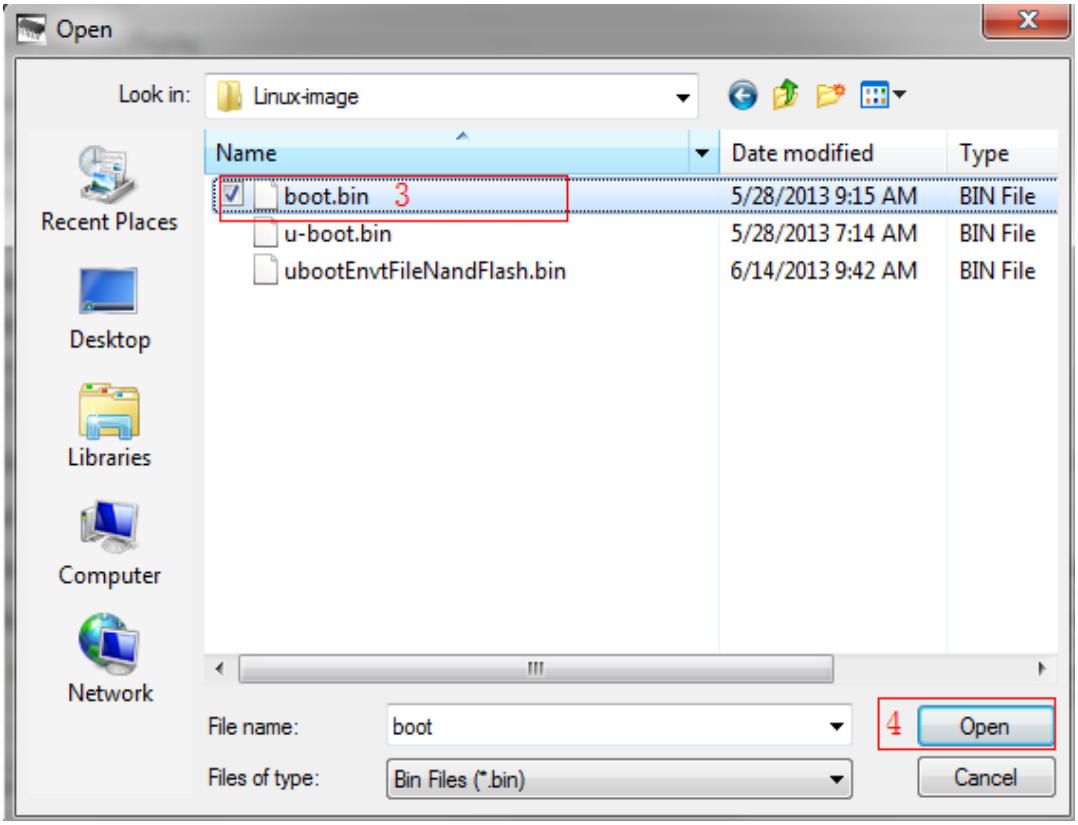

Figure 3-11

⑤ Download [u-boot. bin] to 0x40000. Refer to figure 3-12:

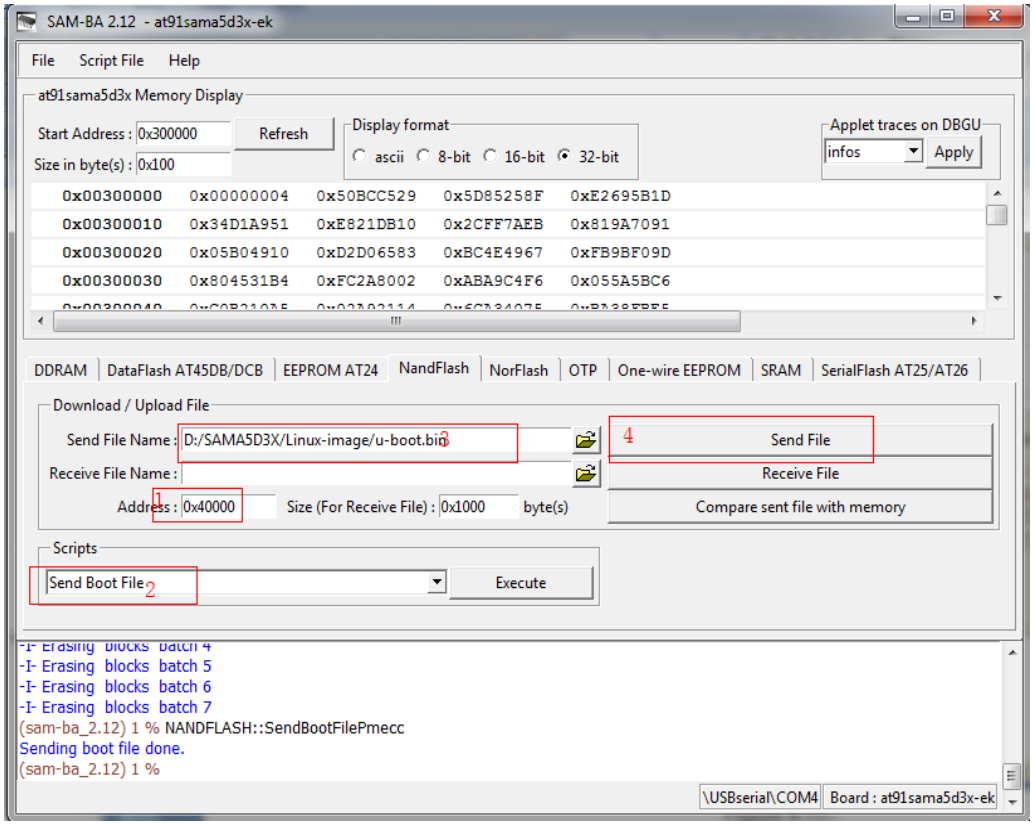

Figure 3-12

⑥ Download [ubootEnvtFileNand-Flash. bin] (this file generated by sam-ba when programing) to 0x000C 0000. Refer to figure 3-13:

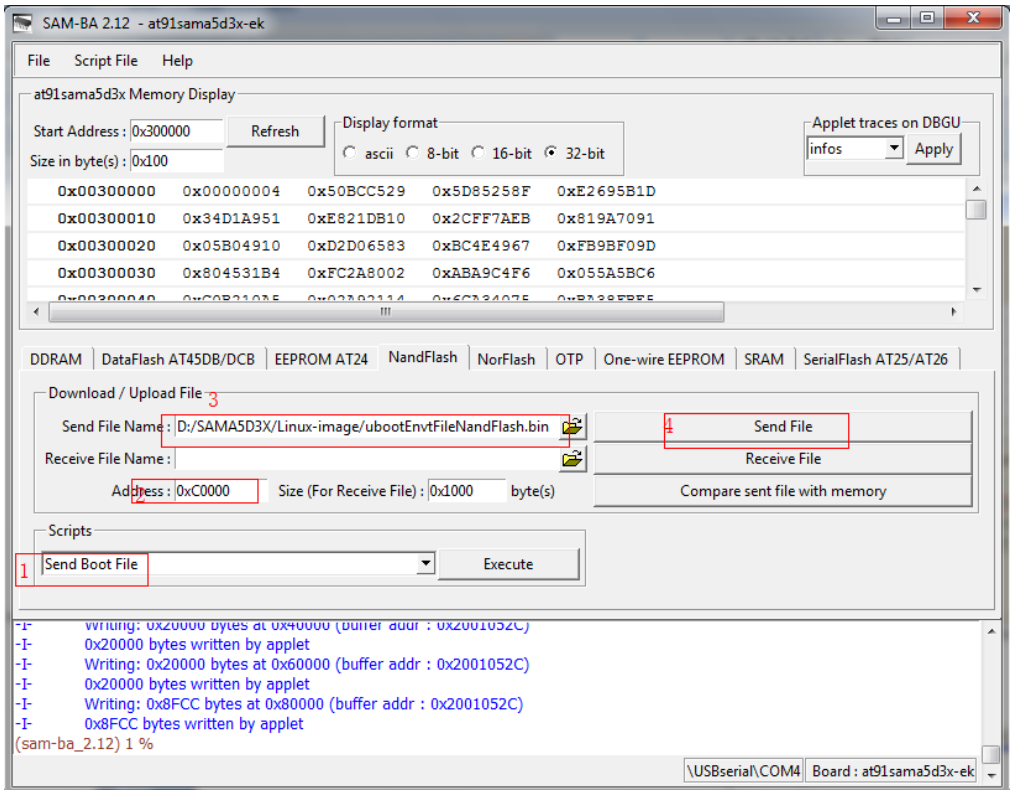

Figure 3-13

⑦ Download [sama5d3xek.dtb] to 0x0018 0000. Refer to figure 3-14:

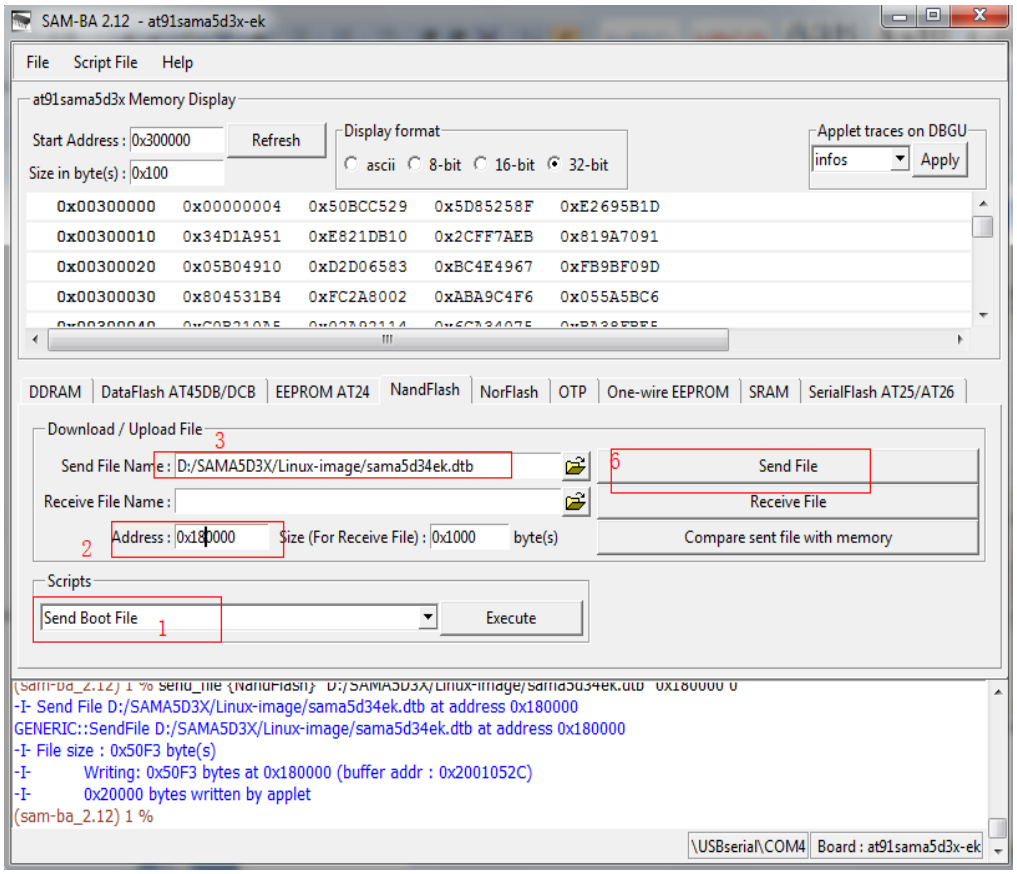

Figure 3-14

⑧ Download Linux kernel [uImage] to 0x0020 0000. Refer to figure 3-15 and figure 3-16:

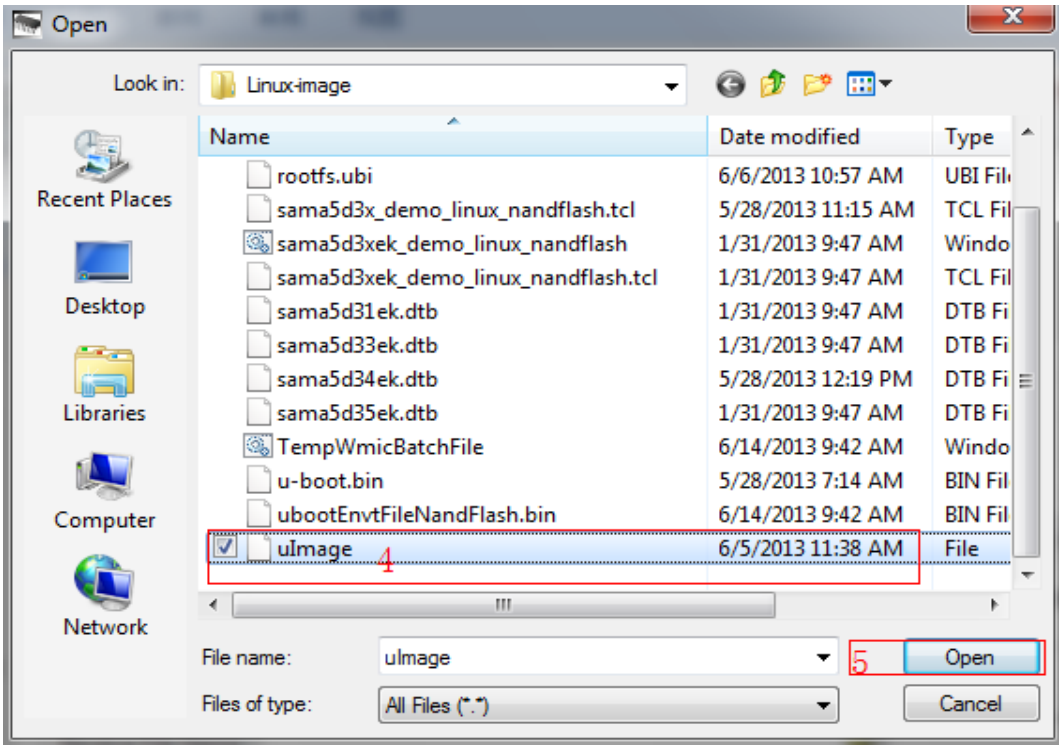

Figure 3-15

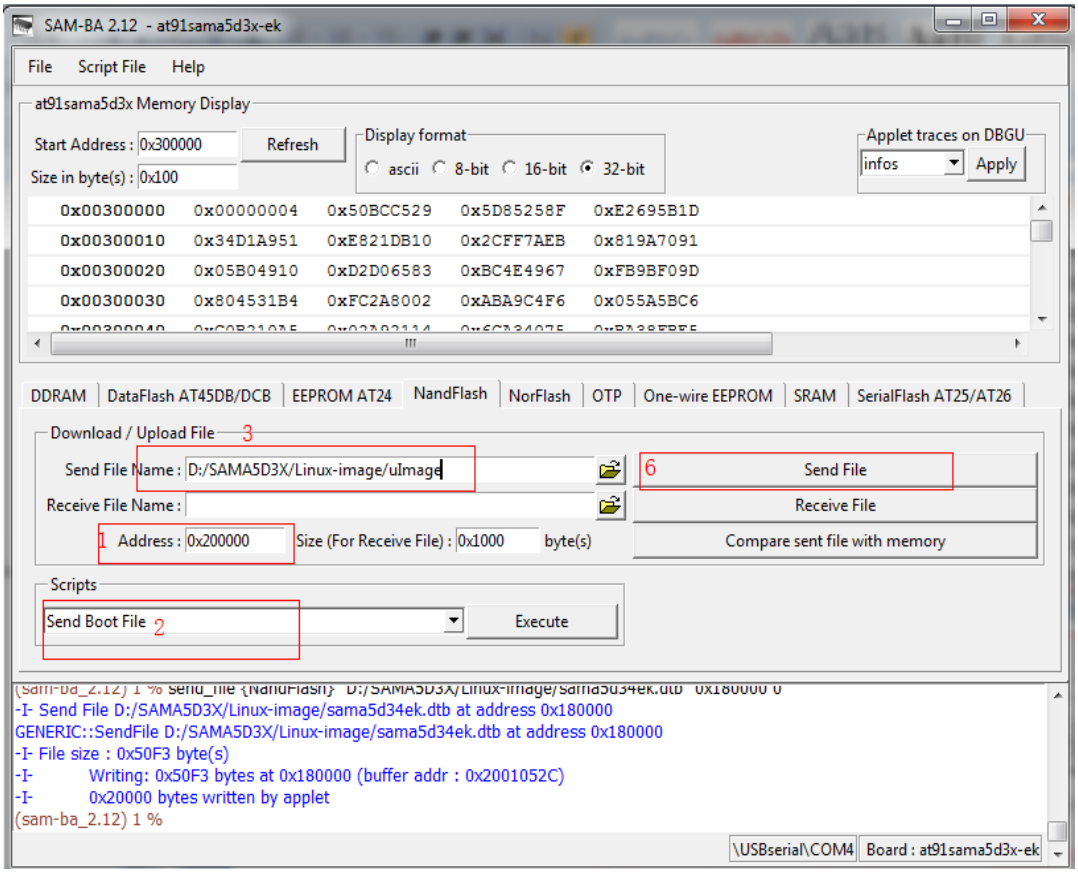

Figure 3-16

⑨ Download [rootfs. ubi] to address: 0x80000. Refer to figure 3-17(Note: Select Enable OS PMECC parameters, and click “Execute” to select Trimffst.):

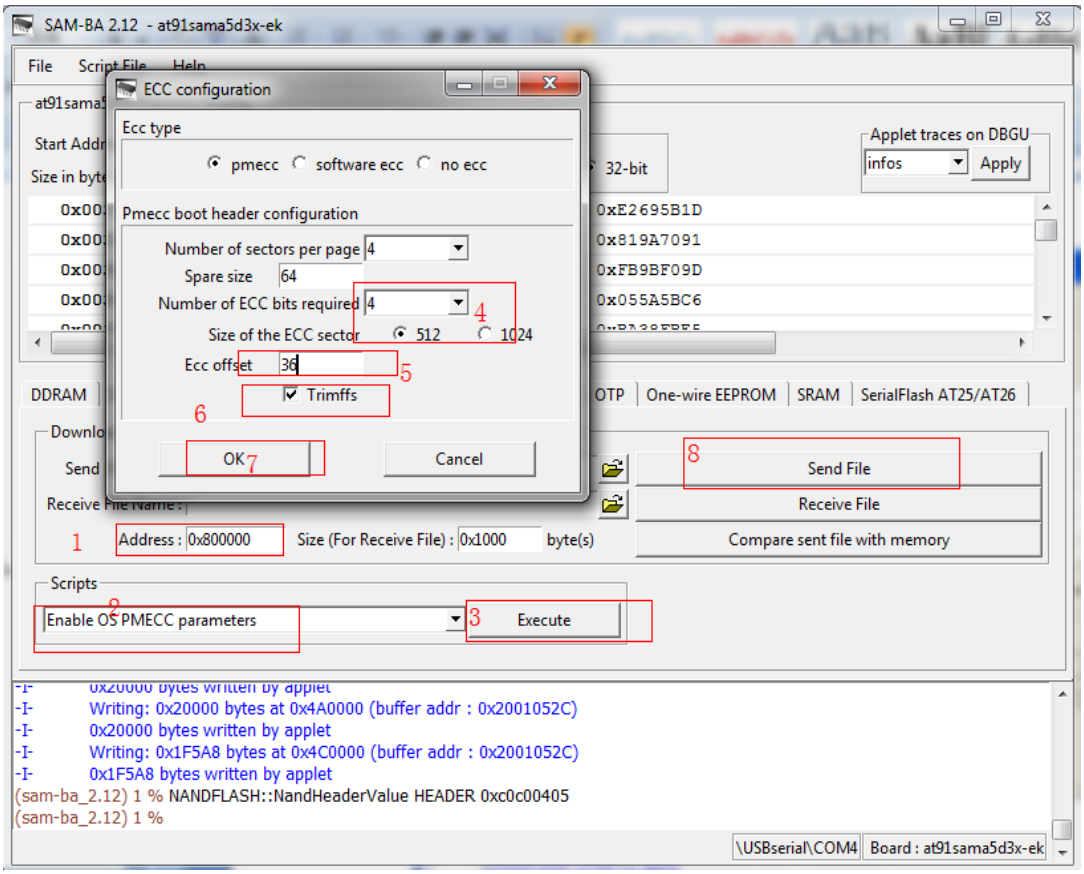

Figure 3-17

(3) Finally, restart board to boot Linux system normally. About the use of Linux in detail please refer to section 3.7.

3.3.5 4.3-inch and 7.0-inch LCD configuration

“Bootstrap”, “uboot”, “kernel” and “file system” for using 4.3-inch and 7.0-inch LCD development board are the same, Choose different sizes of LCD just by “uboot” to the “kernel” boot parameters of different "lcd=x", If this parameter is not specified, the default configuration using a 4.3 -inch LCD. The following in Linux system, for example.

Product CD directory:”02-Images\Linux-image\” have been launched parameters configured “sama5d3x_demo_linux_nand flash.tcl” at related directory, respectively is:

LCD_4.3:

console=ttyS0,115200 mtdparts=atmel_nand:8M(bootstrap/uboot/kernel)ro,-(rootfs) rw rootfstype=ubifs ubi.mtd=1 root=ubi0:rootfs lcd=480x272

LCD_7.0:

```
console=ttyS0,115200 mtdparts=atmel_nand:8M(bootstrap/uboot/kernel)ro,-(rootfs) rw rootfstype=ubifs ubi.mtd=1 root=ubi0:rootfs lcd=800x480
```

Kernel boot parameters can also be used in the uboot starts to dynamically change, change the steps as follows:

(1) Connection and configured a serial port control terminal, restart the development board. When the control terminal output "Hit any key to stop auto boot: 1" fast press the space bar to enter uboot console mode:

```
U-Boot 2012.10 (Jul 22 2013 - 10:26:52)

CPU: SAMA5D31
Crystal frequency:      12 MHz
CPU clock       :       528 MHz
Master clock    :       132 MHz
DRAM:  512 MiB
WARNING: Caches not enabled
NAND:  256 MiB
MMC:   mci: 0
In:    serial
Out:   serial
Err:   serial
Net:   macb0
Warning: failed to set MAC address

Hit any key to stop autoboot:  1
```

(2) Input the command "print" to print all the environment variables sets of the current uboot, the value of the variable "bootargs" is the kernel boot parameters:

```
U-Boot> print
baudrate=115200
bootargs=console=ttyS0,115200 mtdparts=atmel_nand:8M(bootstrap/uboot/kernel)ro,-(rootfs) rw rootfstype=ubifs ubi.mtd=1 root=ubi0:rootfs lcd=480x272
bootcmd=nand read 0x21000000 0x00180000 0x10000; nand read 0x22000000 0x00200000 0x380000; bootm 0x22000000 - 0x21000000
bootdelay=1
ethact=macb0
stderr=serial
stdin=serial
stdout=serial
```

```
Environment size: 356/131067 bytes
```

(3) 4.3-inch LCD please refer to (2), if 7.0-inch LCD, need to amend "LCD = 480 x272" in “bootargs” for "LCD = 800 x480", the command is as follow:

```
U-Boot> set bootargs " console=ttyS0, 115200
mtdparts=atmel_nand:8M(bootstrap/uboot/kernel)ro,-(rootfs) rw rootfstype=ubifs
ubi.mtd=1 root=ubi0:rootfs lcd=800x480"
```

(4) Enter the following command to save the new configuration of the kernel boot parameters:

```
U-Boot> saveenv
Saving Environment to NAND...
Erasing redundant NAND...
Erasing at 0x100000 -- 100% complete.
Writing to redundant NAND... done
```

(5) Restart the development board or direct input "boot" command guidance system will use the new configuration of the kernel boot parameters:

```
U-Boot> boot
```

Note: Calibrate configuration will not be available after change configuration, need to be run "ts_calibrate" terminal to recalibrate again. If Android system, can directly click on "AndroidCalibration" to run calibrate tool.

3.4 Linux Development Environment Structure

The contents of this chapter please refer to **"description VirtualBox's Linux-based development environment to build pdf"**.

3.5 Installation and Compile

3.5.1 Create Working Directory

Establish a working directory and copied 04-Linux_Source to “/opt/linux“ (own working directory also can be edited).

```
# mkdir /opt/linux
# cd /opt/linux
# cp -r /media/cdrom/04-Linux_Source/* ./
```

3.5.2 Install Cross Compiler Tools

Decompress cross compiler tool chain.

```
# sudo apt-get install build-essential git libncurses5-dev u-boot-tools
# sudo apt-get install flex bison texinfo zip unzip zlib1g-dev gettext
# sudo apt-get install gperf libsdl-dev libesd0-dev libwxgtk2.6-dev
# sudo apt-get install uboot-mkimage
# sudo apt-get install flex bison texinfo unzip gettext
# sudo apt-get install g++ xz-utils
# cp /media/cdrom/03-Tools/Cross_compiler/gcc-linaro-arm-linux-gnueabihf
-4.7-2013.04-20130415_linux.tar.bz2 ./
# sudo tar xjf gcc-linaro-arm-linux-gnueabihf-4.7-2013.04-20130415_linux.tar.bz2 -C
/opt/
# export ARCH=arm
#export
CROSS_COMPILE=/opt/gcc-linaro-arm-linux-gnueabihf-4.7-2013.04-20130415_linux/bin
/arm-linux-gnueabihf-
```

3.5.3 Install AT91Bootstrap Source and Compile

(1) Install

```
# cd /opt/linux/Bootstrap
# tar xvjf at91bootstrap.tar.bz2
# cd at91bootstrap
```

(2) Compile

```
# make mrproper
# make at91sama5d3xeknf_uboot_defconfig
# make
```

At91SAMA5D3Xek-Nand-Flashboot-3.1.bin in binary directory is AT91Bootstrap file. Rename it to “boot.bin” for automatic download. AT91Bootstrap is a boot loader for ATMEL chip, which initialize necessary hardware (GPIO Clock, SDRAM, etc.), then copy uboot to SDRAM to run.

3.5.4 Install uboot Source and Compile

(1) Install

```
# cd /opt/linux/U-boot
# tar xvjf u-boot-at91.tar.bz2
```

```
# cd u-boot-at91
```

(2) Compile

```
# make distclean
# make sama5d3xeknf_512MB_config
# make
```

If use the board carries 256MB DDR2, please replace "sama5d3xeknf_512MB_config" with "sama5d3xeknf_256MB_config".

U-boot.bin is U-boot file that we download in u-boot-at91 directory.

3.5.5 Install and Compile Linux kernel Source Code

(1) Install

```
# cd /opt/linux/Linux-at91
# tar xvjf linux-at91.tar.bz2
# cd linux-at91
```

(2) Compile

```
# ./make_image.sh  linux-512mb
```

If use the board carries 256MB DDR2, please replace "linux-512mb" with "linux-256mb".

After compile kernel, uImage file in arch /arm/boot/ directory is Linux image files that we need. sama5d31ek.dtb, sama5d33ek.dtb, sama5d34ek.dtb, sama5d35ek.dtb is Linux device tree image file what we need.

3.5.6 Install and Compile Linux File System

(1) Install

```
# cd /opt/linux/Buildroot-at91
# tar xvjf buildroot-at91.tar.bz2
# cd buildroot-at91
```

(2) Compile

```
# sudo apt-get install flex bison texinfo unzip gettext
# sudo apt-get install g++ xz-utils
# cp buildroot.config .config
# make
```

It takes long time to compile kernel, rootfs.ubi in arch/arm/boot/ directory is Linux file system.

3.6 Make Linux File System

"rootfs.ubi" can be formulated and modified. Here is an example how to add application into file system root directory.

3.6.1 Write Demo Program hellomyir

First of all, Program "hellomyir"

(1) Create and compile" hellomyir.c"

```
# vi hellomyir.c
```

Enter the following in " hellomyir.c", save and exit:

```
# include <stdio.h>
int main(int argc, char *argv[])
{
        int i;
        printf("========== Hello Myir ==========\n");
        printf("argc: %d\n", argc);
        for(i = 0; i < argc; i++)
        {
                printf("argv[%d]: %s\n", i, argv[i]);
        }
        return 0;
}
```

(2) Compile "hello myir.c"

Add cross-compiler tools path to PATH:

```
# export PATH=$PATH: /opt/gcc-linaro-arm-linux-gnueabihf-4.7-2013.04-20130415\
_linux/bin/arm-linux-gnueabihf-
```

Use the cross compiler tool to compile:

```
# arm-none-linux-gnueabi-gcc -static -o hellomyir hellomyir.c
```

3.6.2 Mount UBIFS File System

UBIFS is a new flash file system by nokia engineers under the help of Szeged University, which is considered the next generation of JFFS2 files system. UBIFS file system specifically for the large-capacity FLASH embedded mobile devices, mounting UBIFS file system must have mtd interface, while Ordinary PC usually has no mtd

manage disk. So here needs nandsim simulator, simulate mtd device with a RAM space, then mount UBIFS file system. The concrete steps are as follows:

(1) Load UBIFS

Enter the following command:

```
# sudo apt-get install mtd-utils
# sudo modprobe nandsim first_id _byte=0x2c second_id_byte=0xda
  third_id_byte=0x90 fourth_id_byte=0x95
```

It needs to pass a few parameters to load nandsim: first_id_byte, second_id_byte, third_id_byte and fourth_id_byte are ID for NANDFLASH of the simulated target. MYD-SAMA5D3X use NANDFLASH of Samsung K9F2G08U0B. Four ID bytes can be found in datasheet: 0x2c, 0xda, 0x90, 0x95

If execute successfully, there will be mtd0 and mtd0r0 devices in /dev/directory:

```
# ls /dev/mtd*
/dev/mtd0     /dev/mtd0ro
```

(2) Erase mtd0 partition, the operation is as follows:

```
# sudo flash_eraseall /dev/mtd0
Erasing 128 Kibyte @ ffe0000 -- 100 % complete
```

(3) Load rootfs.ubi to new mtd0 partition. Here used dd command to load, as follows:

```
# sudo dd if= rootfs.ubi    of=/dev/mtd0
94976+0 records in
94976+0 records out
48627712 bytes (49 MB) copied, 0.73911s, 65.8MB/s
```

(4) Mount UBIFS system file

After completing the above step, load “ubi” modules and attach to “mtd0”, mount UBIFS file system like mounting ordinary “mtd” device.

Load ubi modules and attach to mtd0 equipment:

```
# sudo    modprobe    ubi    mtd=0,2048
```

Create a new mount point:

```
# mkdir fsmount
```

Mount it by the following command:

```
# sudo    mount    -t    ubifs    ubi0_0    fsmount/
# ls fsmount/
bin    boot    dev    etc    home    lib    media    mnt    proc    sbin    sys    tmp    usr    var
```

Now that mount UBIFS file system is successful.

3.6.3 Modify UBIFS System Files

After mount UBIFS file system successfully, it can modify file contents, such as add, delete and modify files. It should add compiled demo program “hellomyir” to system root directory. The operation is as follows:

```
# sudo cp hellomyir fsmount/
# sync
# ls fsmount
bin boot dev etc hellomyir home lib media  mnt  proc  sbin  sys  tmp  usr  var
```

3.6.4 Regenerate UBIFS System File

After modification, it needs to regenerate file system by mkfs.ubifs tool, Enter the following command to generate a new UBIFS file system:

```
# sudo  mkfs.ubifs  -r  fsmount/  -m  2048  -e  126976  -c  2024  \
-o  ubifs.img
```

“mkfs.ubifs” parameter description:

-r Establish the system file directory

-m Minimum I/O transfer unit size

-e Logical size of erase block

-c The largest number of erase logic blocks

-o Specify the output file

View smallest I/O transfer unit size and logical erase block size by the following command:

```
# ubinfo /dev/ubi0
ubi0
Volumes count:                           1
Logical eraseblock size:                 126976 bytes, 124.0 KiB
Total amount of logical eraseblocks:     2048 (260046848 bytes, 248.0 MiB)
Amount of available logical eraseblocks: 0 (0 bytes)
Maximum count of volumes                 128
Count of bad physical eraseblocks:       0
Count of reserved physical eraseblocks:  20
Current maximum erase counter value:     1
Minimum input/output unit size:          2048 bytes
Character device major/minor:            250:0
```

```
Present volumes:                                    0
```

View erase block number by using the following command:

```
# ubinfo /dev/ubi0_0
Volume ID:     0 (on ubi0)
Type:          dynamic
Alignment:     1
Size:          2024 LEBs (256999424 bytes, 245.1 MiB)
State:         OK
Name:          rootfs
Character device major/minor: 250:1
```

Then use ubinize tool to generate fsimage.ubi file. Firstly, it needs to create configuration files of ubinize.cfg:

```
# vi ubinize.cfg
```

Enter the following, save and exit:

```
[ubifs]
mode=ubi
image=ubifs.img
vol_id=0
vol_size=64MiB
vol_type=dynamic
vol_name=rootfs
vol_flags=autoresize
vol_alignment=1
```

Enter the following command to generate final fsimage.ubi file:

```
# sudo ubinize -m 2048 -p 128KiB -o fsimage.ubi ubinize.cfg
```

Parameter description of ubinize:

-m The size of minimum input/output byte flash unit

-p The erase block size of FLASH physical

-o output file

Here is different mkfs.ubifs parameter, - p parameter represents the physical erase block size. UBI work in MTD layer, so it needs the MTD parameters, namely physical parameters. UBIFS work in UBI, so it needs the UBI parameters, namely the logic parameter. Now, UBI image has been saved in the ubi.img, which not only contains UBIFS information, but also contains UBI information.

After the completion, generated “fsimage.ubi” file can use the method described in chapter 4.3.4 to download to 0x800000.

Reset board and input “root” to login, there is added “hellomyir” file in the root directory:

```
buildroot login: root
# cd /
# ls
bin        etc        lib        proc       tmp
boot       hellomyir  media      sbin       usr
dev        home       mnt        sys        var
```

Run helloworld, as follows:

```
# ./hellomyir
========== Hello Myir ==========
argc: 1
argv[0]: ./hellomyir
```

3.7 Linux application

After a Linux system running, can be operated by touch screen, can also through the terminal serial ports, here is how to through the terminal Linux operating, such as U disk, SD card mount, ETH test and how to play music and so on.

3.7.1 Touch Screen Calibration

Entering system will run the screen calibration procedure automatically. Recalibrate the touch screen by the following steps if it requires:

(1) Open HyperTerminal (baud rate: 115200 Data bits: 8, Parity: None Stop bits: 1, data flow control: none). After start Linux, log in as root command:

```
buildroot login: root
```

(2) Run the calibration procedure and click the five corresponding calibration points on the LCD screen. The calibration can be carried out:

```
# ts_calibrate
xres = 480, yres = 272
Took 12 samples...
Top left : X =    767 Y =    178
Took 14 samples...
Top right : X =    793 Y =    947
Took 13 samples...
Bot right : X =    309 Y =    934
```

```
Took 12 samples...
Bot left : X =   308 Y =   169
Took 10 samples...
Center : X =   557 Y =   556
-29.638855 -0.011581 0.495638
331.720245 -0.364475 0.006420
Calibration constants: -1942412 -758 32482 21739618 -23886 420 65536
```

(3) After calibration is complete, it needs to restart system calibration to take effect. The operation is as follows:

```
# sync
# reboot
```

3.7.2 U-disk application

(1) Follow information will display on terminal when inserting a u-disk on USB host port:

```
usb 1-3: new high-speed USB device number 2 using atmel-ehci
usb 1-3: New USB device found, idVendor=13fe, idProduct=3600
usb 1-3: New USB device strings: Mfr=1, Product=2, SerialNumber=3
usb 1-3: Product: DT 101 G2
usb 1-3: Manufacturer: KINGSTON
usb 1-3: SerialNumber: C1690905
scsi0 : usb-storage 1-3:1.0
scsi 0:0:0:0: Direct-Access     KINGSTON DT 101 G2          8.07 PQ: 0 ANSI: 4
sd 0:0:0:0: [sda] 16076800 512-byte logical blocks: (8.23 GB/7.66 GiB)
sd 0:0:0:0: [sda] Write Protect is off
sd 0:0:0:0: [sda] Write cache: disabled, read cache: enabled, doesn't support DPO or
FUA
 sda: sda1
sd 0:0:0:0: [sda] Attached SCSI removable disk
```

(2) Entering the following command to mount inserted U-disk and view U disk contents.

```
# mount -t vfat /dev/sda1 /mnt/
# ls /mnt/usb/
??                                  MYD-S5PV210
??                                  MYD-SAMA5D3X-Dev-Res
??-??-???-??-??                     Michael Jackson - Beat It.mp3
?????                               Dangerous.mp3
BOOTEX.LOG                          Qt_Arm.rar
DSC04807.JPG                        qt????
FOUND.000
```

(3) Unplug U-disk directly when the use is completed, system will uninstall automatically.

3.7.3 SD Card application

(1) When Micro SD card is inserted, HyperTerminal displays SD card information:

```
mmc0: host does not support reading read-only switch. assuming write-enable.
mmc1: new high SD card at address aaaa
mmcblk0: mmc1:aaaa SU02G 1.84 GiB
mmcblk0: p1
```

(2) Mount and view SD card:

```
# mount -t vfat /dev/mmcblk0p1 /media/sdcard
# ls /media/sdcard/
360                    LOST.DIR              duba
360Download            Music                 iReader
Android                PicStore              mm_sec.dat
Audio                  QQ                    qqservicec.log
Backup                 QQBrowser             scan.txt
BaiduMapSdk            Qzone                 tencent
BlackBerry             RMS                   tmp
DCIM                   Sounds                wandoujia
Download               audio_play_list.txt
GT-S3600C.samsung      bluetooth
```

(3) Pull out SD card directly, system will uninstall it automatically.

3.7.4 Play MP3 Music

Before playing music, connect headphones or stereo to J11 U disk storages music and is inserted into USB interface.

Play music in U disk by mplayer command in terminal:

```
# mount -t vfat /dev/sda1 /mnt/
# ls /mnt
# madplay /mnt/Dangerous.mp3
```

Sounds will come from the headset. Terminal information is shown as follow:

```
MPEG Audio Decoder 0.15.2 (beta) - Copyright (C) 2000-2004 Robert Leslie et al.
```

Press “Ctrl+ C” to end playing music.

3.7.5 Network Port Test

(1) The development board connected to a PC using crossover Ethernet cable, through the super terminal, for a development board configuration is not the IP address of the current local area network (LAN) other equipment takes up. Here use address: 192.168.0.2:

```
# ifconfig  eth0  192.168.0.2  up
IPv6: ADDRCONF(NETDEV_UP): eth0: link is not ready
# macb f0028000.ethernet: eth0: link up (1000/Full)
IPv6: ADDRCONF(NETDEV_CHANGE): eth0: link becomes ready
```

(2) Test board to PC network by ping command (here host IP: 192.168.0.3).

Ping development board in PC:

```
# ping 192.168.0.10
```

Refer to figure-3.18:

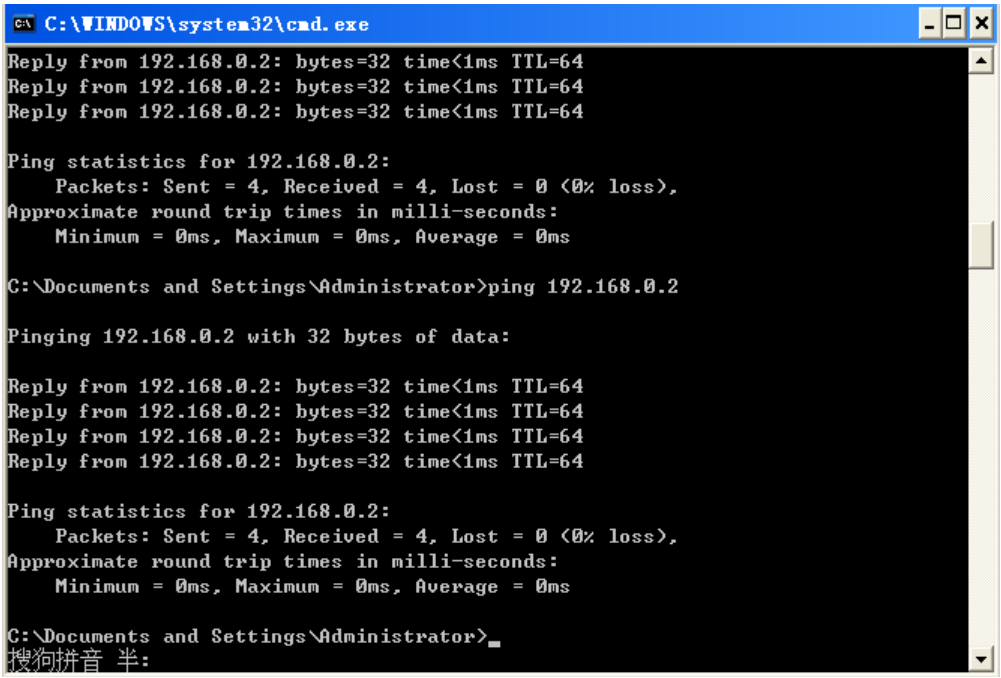

Figure-3.18

Ping host in board:

```
# ping 192.168.0.3
PING 192.168.0.3 (192.168.0.3): 56 data bytes
64 bytes from 192.168.0.3: seq=0 ttl=128 time=0.801 ms
64 bytes from 192.168.0.3: seq=1 ttl=128 time=0.377 ms
64 bytes from 192.168.0.3: seq=2 ttl=128 time=0.357 ms
64 bytes from 192.168.0.3: seq=3 ttl=128 time=0.359 ms
64 bytes from 192.168.0.3: seq=4 ttl=128 time=0.447 ms
```

3.7.6 Telnet Test

(1) Configure IP (IP can allocate, designated IP 192.168.1.2 in case)

```
# ifconfig eth0 192.168.1.2 up
```

(2) Configure Gateway

Test connection with the gateway, as follows:

```
# ping 192.168.1.1
PING 192.168.1.1 (192.168.1.1): 56 data bytes
64 bytes from 192.168.1.1: seq=0 ttl=64 time=16.455 ms
64 bytes from 192.168.1.1: seq=1 ttl=64 time=2.391 ms
64 bytes from 192.168.1.1: seq=2 ttl=64 time=3.924 ms
64 bytes from 192.168.1.1: seq=3 ttl=64 time=2.254 ms
64 bytes from 192.168.1.1: seq=4 ttl=64 time=2.005 ms
```

(3) Set 192.168.0.1 as the default gateway:

```
# route  add  default  gw  192.168.0.1
```

Test connection with 202.112.17.137:

```
# ping  202.112.17.137
PING 202.112.17.137 (202.112.17.137): 56 data bytes
64 bytes from 202.112.17.137: seq=0 ttl=54 time=32.202 ms
64 bytes from 202.112.17.137: seq=1 ttl=54 time=24.457 ms
64 bytes from 202.112.17.137: seq=2 ttl=54 time=22.918 ms
64 bytes from 202.112.17.137: seq=3 ttl=54 time=23.178 ms
64 bytes from 202.112.17.137: seq=4 ttl=54 time=29.341 ms
```

(4) Configure DNS server

View current DNS server address by ipconfig/all command, machine DNS is 202.103.24.68. Set target board's DNS (depend on the circumstances):

```
# echo "nameserver 202.103.24.68" | tee /etc/resolv.conf
```

Ping www.baidu.com to test extranet access:

(5) Use Telnet access to the BBS

```
# telnet  bbs.scut.edu.cn
```

The test result is show in figure 3-19:

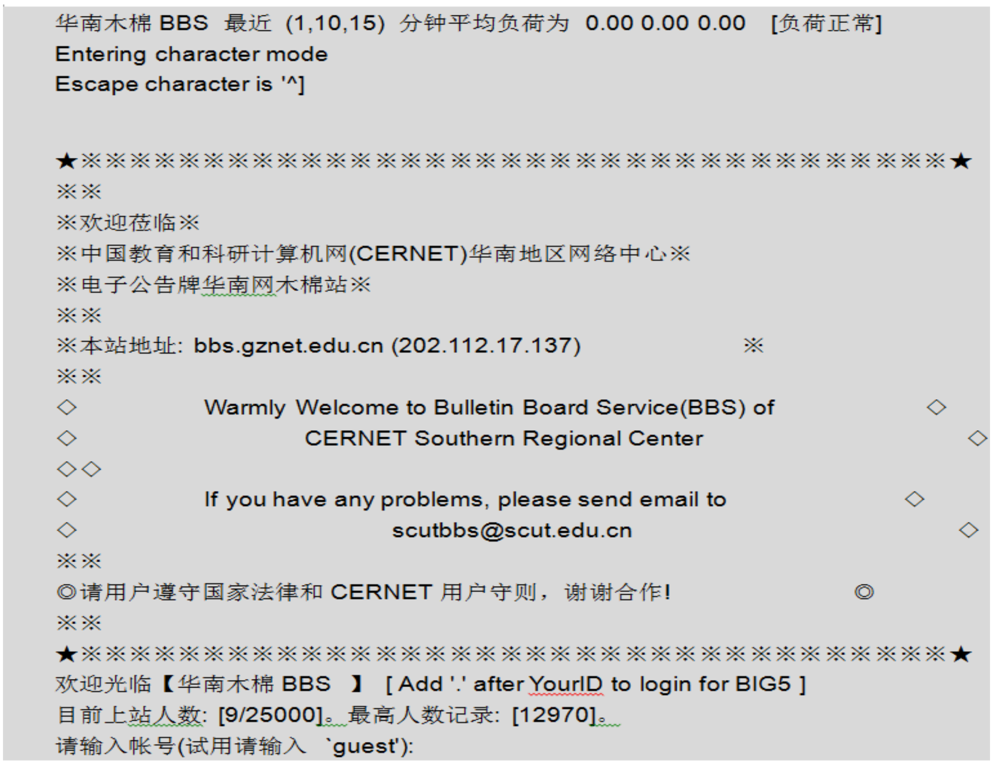

```
华南木棉 BBS  最近 (1,10,15) 分钟平均负荷为  0.00 0.00 0.00   [负荷正常]
Entering character mode
Escape character is '^]


★※※※※※※※※※※※※※※※※※※※※※※※※※※※※※※※※※※※※★
※※
※欢迎莅临※
※中国教育和科研计算机网(CERNET)华南地区网络中心※
※电子公告牌华南网木棉站※
※※
※本站地址: bbs.gznet.edu.cn (202.112.17.137)                ※
※※
◇            Warmly Welcome to Bulletin Board Service(BBS) of            ◇
◇                      CERNET Southern Regional Center                       ◇
◇◇
◇            If you have any problems, please send email to            ◇
◇                              scutbbs@scut.edu.cn                            ◇
※※
◎请用户遵守国家法律和 CERNET 用户守则，谢谢合作!                ◎
※※
★※※※※※※※※※※※※※※※※※※※※※※※※※※※※※※※※※※※※★
欢迎光临【华南木棉 BBS  】 [ Add '.' after YourID to login for BIG5 ]
目前上站人数: [9/25000]。最高人数记录: [12970]。
请输入帐号(试用请输入  `guest'):
```

Figure 3-19

3.7.7 Login board via telnet

(1) Configure IP(IP can allocate, designated IP 192.168.1. 166 instead)

```
# ifconfig eth0 192.168.1.166
```

(2) Start telenet service

```
# telnetd
```

(3) Login board by telenet client

Use telenet in windows(telenet is available when adding system copments in Win7) as example, type command as follows):

```
telnet 192.168.1.166
```

Enter user name:telenet_user,password:telenet, as show in fogure 3-20:

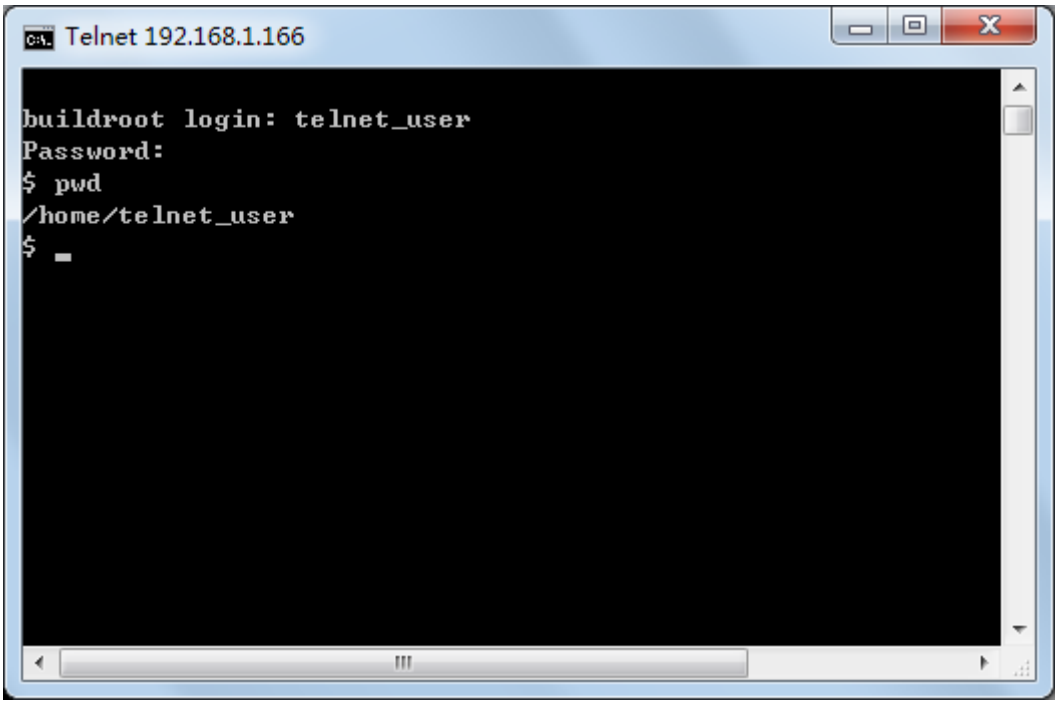

Figure 3-20

After login on board by telnet, telenet_user can make operations and switch to super user by follow command:

```
$ su -
```

The current directory will change to /root after this command.

Noted: user cann't login by root authority directly, the DVD provide telnent_user in Linux system for login by telenet.

3.7.8 Mount NFS file system

Noted: here we build NFS server on Ubuntu as example.

(1) Build NFS server on Ubuntu

① Install "nfs-kernel-server"

```
# sudo apt-get install nfs-kernel-server
```

② Add follow content at file end of /etc/exports (The NFS directory is /home/jbo/nfsdir,this directory will be mount on clients)

```
/home/jbo/nfsdir *(rw,sync,no_root_squash)
```

③ Restart portmap and nfs-kernel-server

```
# service portmap restart
# service nfs-kernel-server restart
```

(2) Mount NFS file system on board

① Configure IP

```
# ifconfig eth0 192.168.1.166
```

② Make directory

```
# mkdir nfs
```

③ Mount NFS file system, the NFS server IP is 192.168.1.223

```
# mount -t nfs -o nolock 192.168.1.223:/home/jbo/nfsdir nfs
```

User can operate nfs's directory, and the change/modification will be refected on NFS server /home/jbo/nfsdir.

3.7.9 RTC application

(1) Install button battery to board.

(2) System will set initial value at first start time, so it needs to set the time after system startup.

Set system time:

```
# date -s 2013.06.07-15:51:00 ;
hwclock -w Jul  8 10:36:00 BST 2013
```

Query system time and hardware RTC time:

```
# date
Fri Jun  7 15:52:22 UTC 2013
# hwclock -r
Fri Jun  7 15:53:22 2013  0.000000 seconds
```

3.8 Qt Guide

This section describe the methods and steps to using Qt GUI application development on the MYD - SAMA5D3X, including two parts, the first tells use Qt cross compile tool chain which is provided in CD. The second part tells how to generated Qt cross tool chain and related library file from Qt-Embedded source code.

Note: on the development board to download 02-Im ages/Linux directory of Images, for example, download specific steps refer to 3.3.3 automatic download, or 3.3.4 manual download. Here for Ubuntu10.04 PC environment.

3.8.1 Qt cross compile tool chain

For general use Qt program development can be directly supplied CD-ROM Qt cross tool chain , the disc 02-Images/Linux/Qt_Arm directory contains the tool chain corresponding Qt library , so with this compiler tool chain the Qt program can be run directly on the board . CD-ROM provides detailed configuration Qt cross tool chain as follows:

Configuration items	Value
Build	libs
Debug	no
Qt 3 compatibility	yes
QtDBus module	no
Qt ScriptTools module	yes
Qt XmlPatterns module	no
Phonon module	no
SVG module	yes
WebKit module	yes
STL support	yes
PCH support	yes
MMX/3DNOW/SSE/SSE2	no/no/no/no
iWMMXt support	no
IPv6 support	yes
IPv6 ifname support	yes
getaddrinfo support	yes
getifaddrs support	yes
Accessibility	yes
NIS support	yes
CUPS support	no

Configuration items	Value
Iconv support	no
Glib support	no
GStreamer support	no
Large File support	yes
GIF support	plugin
TIFF support	plugin (qt)
JPEG support	plugin (qt)
PNG support	yes (qt)
MNG support	plugin (qt)
zlib support	yes
Session management	no
Embedded support	arm
Freetype2 support	yes
Graphics (qt)	linuxfb multiscreen linuxfb
Graphics (plugin)	
Decorations (qt)	styled windows default
Decorations (plugin)	
Keyboard driver (qt)	tty usb
Keyboard driver (plugin)	
Mouse driver (qt)	pc linuxtp pc linuxtp tslib
Mouse driver (plugin)	
OpenGL support	no
SQLite support	qt (qt)
OpenSSL support	no

Table 3-2

(1) Install Qt cross compile tools to “/usr/local/”

Set up “qt-arm”, copy Qt cross compile tools to this directory and decompress:

```
$ cd ~
$ mkdir qt-arm
$ cd qt-arm
$ cp /media/cdrom/04-Linux_Source/Qt_Arm/Qt-4.5.3_Tslib-1.4.tar.gz ./
$ sudo tar xvzf Qt-4.5.3_Tslib-1.4.tar.gz -C /usr/local/
```

There will be more than two directories: “qt4.5.3-arm” and “tslib” in “/usr/local”, “qt4.5.3-arm” contains tools, libraries and header files used in cross-compilation, etc.; “Tslib” contains link libraries and configuration files used in touch screen.

(2) Set the system environment variables

① If you haven't added “arm-Linux-gnueabi-” to PATH, here cross compiler path is “/usr/local/gcc-linaro-arm-linux-gnueabihf-4.7-2013.04-20130415_linux/bin”,execute the following command:

```
$ export \
  PATH=$PATH:/opt/gcc-linaro-arm-linux-gnueabihf-4.7-2013.04-20130415_linux/bin
```

② Set the environment variable Qt application development

Execute the following command at terminal:

```
$ export PATH=$PATH:/usr/local/qt4.5.3-arm/bin
$ export LD_LIBRARY_PATH=$LD_LIBRARY_PATH:/usr/local/qt4.5.3-arm/lib
```

Or add the above command to “/etc/profile”, so set these environment variables automatically when system login.

(3) Burning Qt library image

Refer to 3.3.3 automatic download or 3.3.4 manual download to burn library image , the Images has been set for Qt environment, and already contains the libraries Qt application Commonly used, supported by the function modules as shown in table 3-2. If the features provided can't meet actual demand, Please refer to the next section 3.8.2 cross-compilation Qt development environment to configure the required function modules from the source code.

(4) Compile Qt and run application

There are several Qt sample program in “04-Linux_Source/Qt_Arm/ Qt_Examples/”, here is “Masterdetail” example how to use Qt cross-compilation tool chain to compile Qt application and run on the target board.

① Copy program to Qt-arm

```
$ cd ~/qt-arm
```

```
$ cp /media/cdrom/04-Linux_Source/Qt_Arm/Qt_Examples/masterdetail.tar.gz ./
$ tar xvzf masterdetail.tar.gz
$ cd masterdetail
```

② Compile the Qt project :

```
$ qmake -project
$ qmake
$ make
```

If compilation error “error: QtSql (QtXml) No such file” happens, need to manually add file: “QT + = SQL (XML)”to “masterdetail. Pro”, after edited “qmake project”.

③ After perform above command, copy “masterdetail” to development board to run on:

```
# ls
masterdetail
# chmod 0777 masterdetail
# ./masterdetail -qws
```

The result is shown in the figure 3-21:

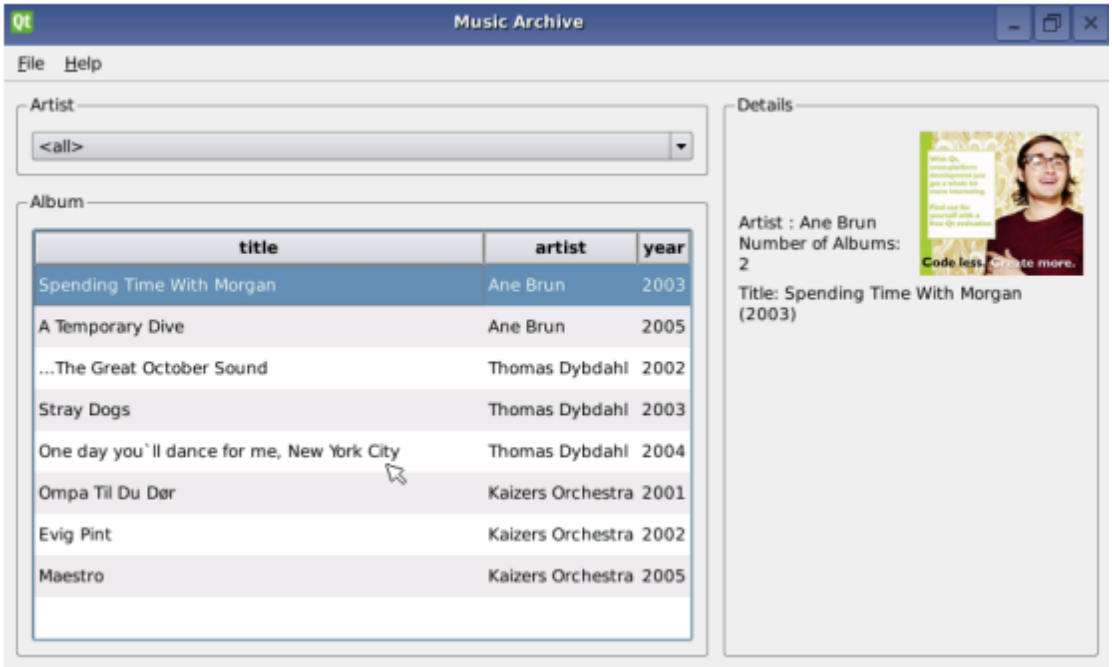

Figure 3-21

3.8.2 Qt development environment

This section describes how compiled Qt cross tool chain and the associated arm-qt library. This method can be developed Qt operating environment, when Qt library cannot

meet the actual development needs. Tslib code source and Qt's code source are in the CD-ROM directory “04-Linux_Source/Qt_Arm/Qt_Arm/Qt_Source”

(1) Establish working directory

```
$ cd ~
$ mkdir qt-arm
$ cd qt-arm
```

(2) Compile tslib installation

① Decompress:

```
$ cp /media/cdrom/04-Linux_Source/tslib.tar.gz ./
$ tar xvzf tslib.tar.gz
$ cd tslib
```

② Compile installation:

If haven't added “arm-none-Linux-gnueabi-“to the PATH, added it to the PATH:“/usr/local/GCC-linaro-arm-inux_linux-gnueabihf-4.7-2013.04-20130415/bin”, perform the following command:

```
$ export \
PATH=$PATH:/opt/ gcc-linaro-arm-linux-gnueabihf-4.7-2013.04-20130415_linux/bin
```

Install “automake”, “libtool”:

```
$ sudo apt-get install automake libtool
```

Configure “tslib”, installation path can be set up their own, where installed into” /usr/local/tslib”:

```
$ ./autogen.sh
$ ./configure CC=arm -linux-gnueabi-gcc CXX=arm-linux-gnueabi-g++
--prefix=/usr/local/tslib --host=arm-linux ac_cv_func_malloc_0_nonnull=yes
```

Compile installation:

```
$ make
$ sudo make install
```

After installing tslib Modify second line "# module_raw input" to "module_raw input", and must top grid.

(3) Compile install “qt-embedded”:

① Decompress:

```
$ cp /media/cdrom/04-Linux_Source/Qt_Arm/Qt_Source
/qt-embedded-linux-opensource-rc-4.5.3.tar.gz ./
$ tar xvzf qt-embedded-linux-opensource-src-4.5.3.tar.gz
$ cd qt-embedded-linux-opensource-src-4.5.3
```

② Specify cross-compiler:

Edit “mkspecs/QWS/Linux-arm-g++/qmake. Conf”:

```
$ vi mkspecs/qws/linux-arm-g++/qmake.conf
```

Enter following command, “arm-Linux-“ to be replaced by “Arm-none-Linux-gnueabi-“ and add”-LTS”, changes are as follows:

```
# modifications to g++.conf
QMAKE_CC = arm-linux-gnueabi-gcc -lts
QMAKE_CXX = arm-linux-gnueabi-g++ -lts
QMAKE_LINK = arm-linux-gnueabi-g++ -lts
QMAKE_LINK_SHLIB = arm-linux-gnueabi-g++ -lts
```

③ Qt configuration:

```
$ ./configure -prefix /usr/local/qt4.5.3-arm -xplatform qws/linux-arm-g++ -release -opensource -qt-zlib -qt-libtiff -qt-libpng -qt-libmng -qt-libjpeg -make libs -nomake docs -embedded arm -little-endian -qt-freetype -depths 8,16,24 -qt-gfx-linuxfb -qt-kbd-usb -qt-mouse-pc -qt-mouse-linuxtp -qt-mouse-tslib -qt-sql-sqlite -qt3support -I/usr/local/tslib/include -L/usr/local/tslib/lib -confirm-license
```

Enter “/configure -help” to look at parameters description.

④ Compile the installation:

```
$ make
$ sudo make install
```

⑤ Set environment variables:

Execute following command at terminal:

```
$ export PATH=$PATH:/usr/local/qt4.5.3-arm/bin
$ export LD_LIBRARY_PATH=$LD_LIBRARY_PATH:/usr/local/qt4.5.3-arm/lib
```

Or add the above command to “/etc/profile”, so set these environment variables automatically when system login.

(4) Transplant Qt to development board

① Copy library to the board

Compress Qt files:

```
$ cd /usr/local/qt4.5.3-arm
$ tar -zcf lib.tar.gz lib
```

Copy “lib.tar.gz” to development board, and then decompress:

```
# mkdir -p /usr/local/qt4.5.3-arm
# tar xzvf lib.tar.gz -C /usr/local/qt4.5.3-arm
```

② Set up environment variable

Environment variable has been written in “/etc/setqtenv“, execute following command on the development board:

```
# source     /etc/setqtenv
```

Or manually input Settings:

```
# export LD_LIBRARY_PATH=/lib:$LD_LIBRARY_PATH
# export QTDIR=/usr/local/qt4.5.3-arm
# export T_ROOT=/usr/local/tslib
# export PATH=$T_ROOT/bin:$PATH
# export LD_LIBRARY_PATH=$T_ROOT/lib:$QTDIR/lib:$LD_LIBRARY_PATH
# export TSLIB_CONSOLEDEVICE=none
# export TSLIB_FBDEVICE=/dev/fb0
# export TSLIB_TSDEVICE=/dev/input/event0
# export TSLIB_PLUGINDIR=$T_ROOT/lib/ts
# export TSLIB_CONFFILE=$T_ROOT/etc/ts.conf
# export TSLIB_CALIBFILE=/etc/pointercal
# export QWS_KEYBOARD=USB:/dev/input/event1
# export QWS_MOUSE_PROTO=Tslib:/dev/event0
# export QT_QWS_FONTDIR=$QTDIR/lib/fonts
```

Chapter 4 Android System Guide

4.1 Overview

Android is a Linux system based open source operating system, mainly used in portable devices. Android operating system originally developed by Andy Rubin development, initially mainly support mobile phone. In 2005 Android is acquainted by Google, formatting the open mobile phone alliance to improvement it, gradually extended to the tablet computer and other area. Since its first release Welcomed by the majority of consumers, Android's market shares around the world more than Symbian system for the first time in the first quarter of 2011, ranking first in the world. The data shows that in February 2012, Android accounted for 52.5% of the share of the global smartphone operating system market.

Android system is running based on Linux system, mainly made by Linux Kernel, system libraries, Dalvik virtual machine, application framework, and applications written mainly by JAVA. Its framework is as shown in figure 4-1:

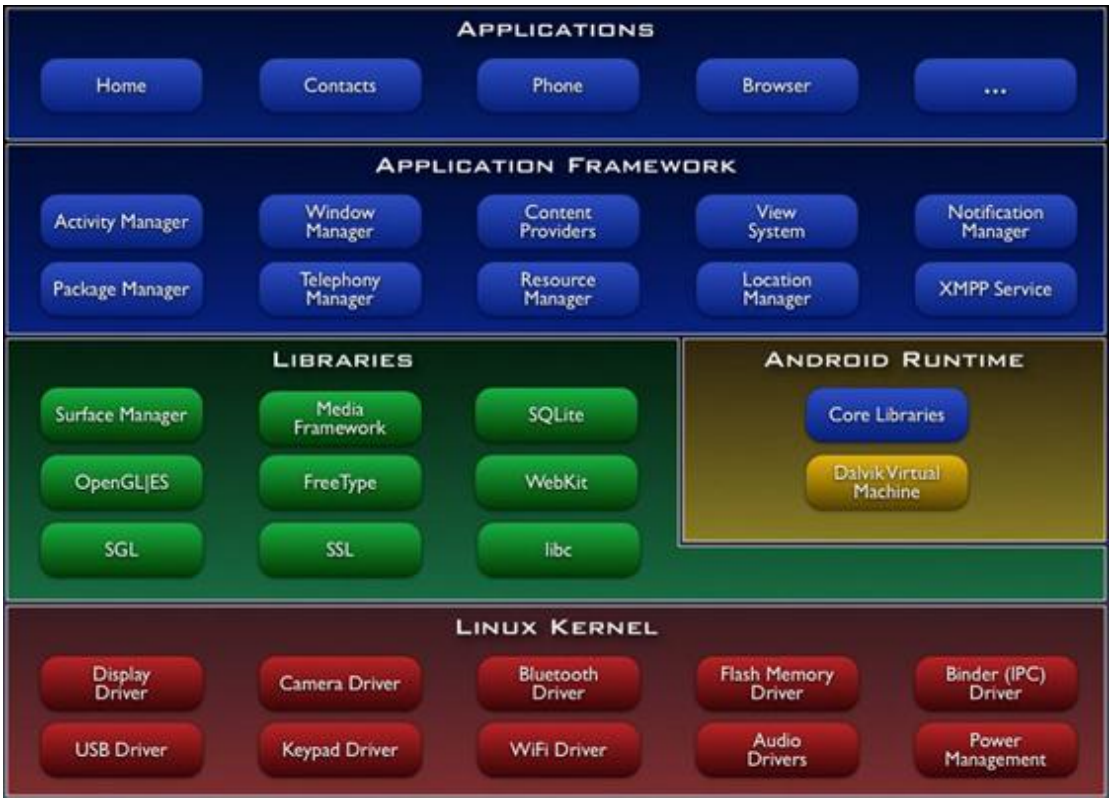

Figure 4-1

This chapter describes how to build and run Android 4.0.4 system in MYD-SAMA5D3X platform, include the following main content:

(1) Build Android system

(2) Compile Android

(3) Android System use

4.2 Software Resources

Software resources are shown in table 4-1:

Category	Name	Note
Boot program	AT91Bootstrap	Use to load ”Uboot”
	Uboot	1.Support Nand-Flash Erase, read and write 2. Support network to download image 3. Support settings, save the environment variable 4. Support display, contrast, modify memory content 5. Support the ”bootm”, “bootargs” settings
Linux Kernel	Linux 3.6.9	Develop Linux kernel for MYD-SAMA5D3X hardware
Device Drivers	Network port driver	ETH0
	Serial port driver	USART1,DBGU
	USB	USB_HOST*2,USB_OTG
	SD card driver	Micro-SD, SDCard
	LCD+ touch	LCD driver
	GPIO driver	Have been tested to provide the source
System Files	Android System Files	Have been tested to provide binary image file

Table 4-1

4.3 Build Android System

This chapter describes how to use image to build Android system.

4.3.1 Install Download Tool

Install Atmel ISP download software SAM-BA (2.12 or later, Note: If install SAM-BA 2.11 and earlier versions, it needs to first uninstall the all (**SAM-BA and USB driver**). If need two or more SAM-BA version coexistence, different SAM-BA versions use different USB interface.

4.3.2 Connect Board and SAM-BA

(1) Connect Board to PC (Please follow steps sequentially), Specific steps are as follows:

① Switch development board to 5 v (power off-position)

② Connect to PC and board through mini-USB

③ Disconnect JP1, JP2 and hold CS_BOOT button, At the same time switch development board to USB_5V. If first time the PC opportunities prompt to install board driver, Select SAM-BA installation directory under the relevant position can be installed as shown in figure 4-2:

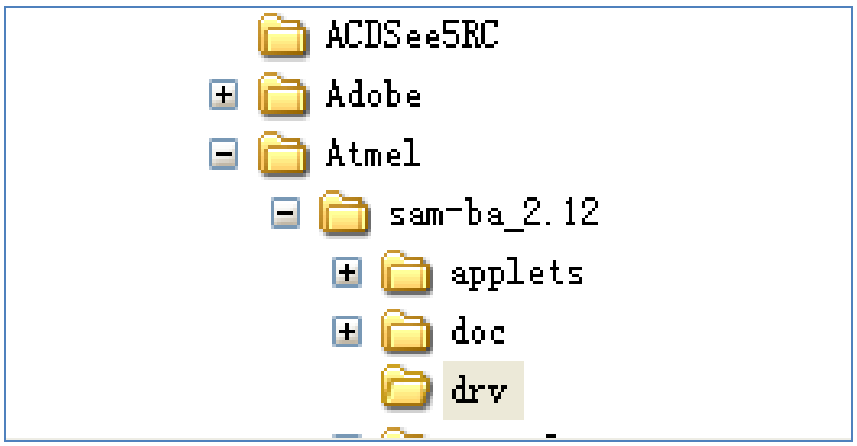

Figure 4-2

(2) If the serial interface as shown in Figure 4-3 "my

computer->properties->Management-> device manager-> port", which shows board driver has been installed (According to the actual situation, here is COM4).

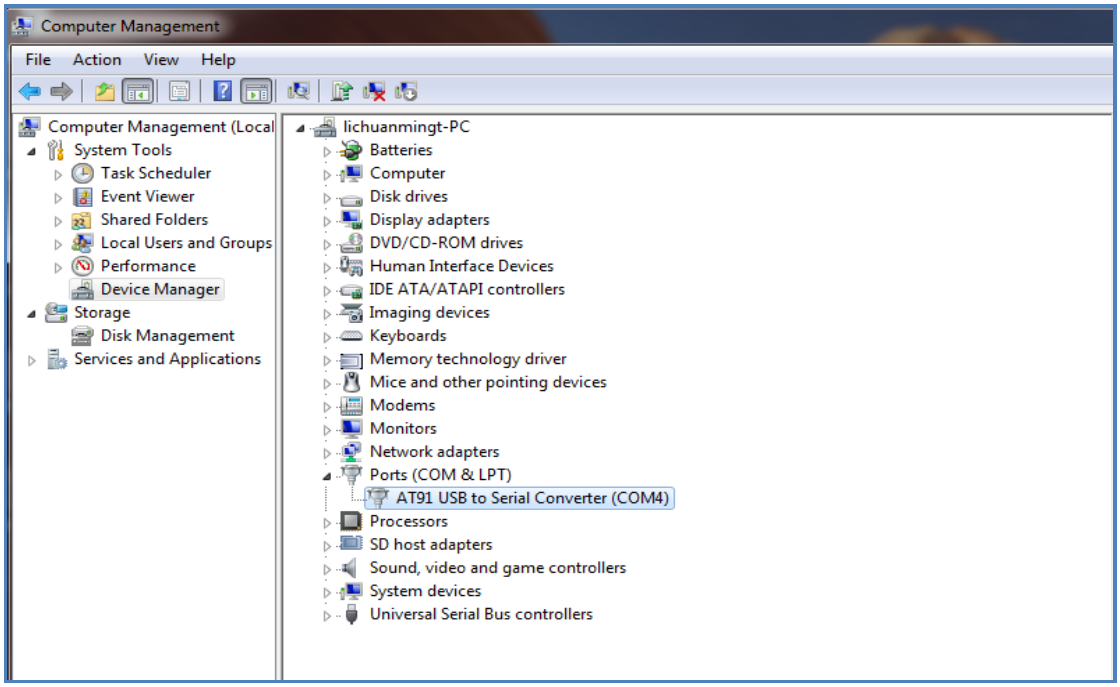

Figure 4-3

4.3.3 Automatic Download

Note: please pull out SD card before download, otherwise an error may happen

Take downloading of image for 4.3-inch LCD and 512MB DDR2 configure as example.

After complete chapter 4.3.1 and 4.3.2, open CD-ROM directory: “02-Images\Linux-image\LCD_4.3_DDR2_512MB”,double-click“sama5d3xek_demo_linux_nandflash”. Then SAM- BA will download Linux image automatically to board. Entire download process takes about three minutes. When pop logfile.log file automatically, reset board, there will be Android start information.

4.3.4 Manual Download

Take downloading of image for 4.3-inch LCD and 512MB DDR2 configure as example. All image files used in this chapter can be founded in the CD-ROM directory:

02-Images\Android-image\LCD_4.3_DDR2_512MB. The NandFlash content of Android system is divided, as shown in figure 4-4:

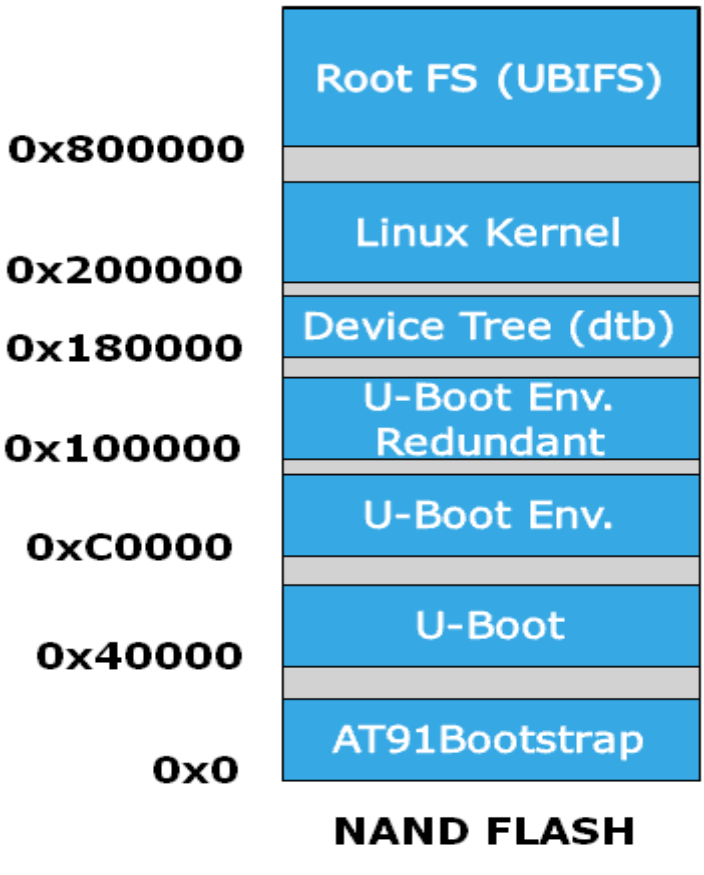

Figure 4-4

Download Linux by SAM-BA manually.

(1) After completed chapter 4.3.1 and 4.3.2, double-click samba v2.11, there will appears interface. Refer to figure 4-5:

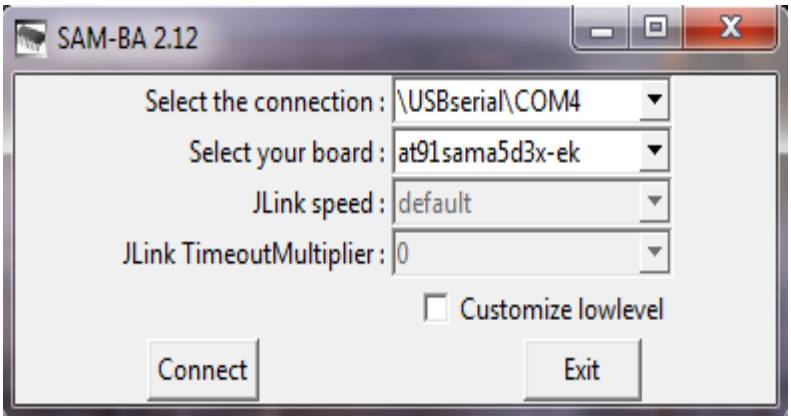

Figure 4-5

(2) Click “Connect” to enter SAM-BA. Refer to figure 4-6:

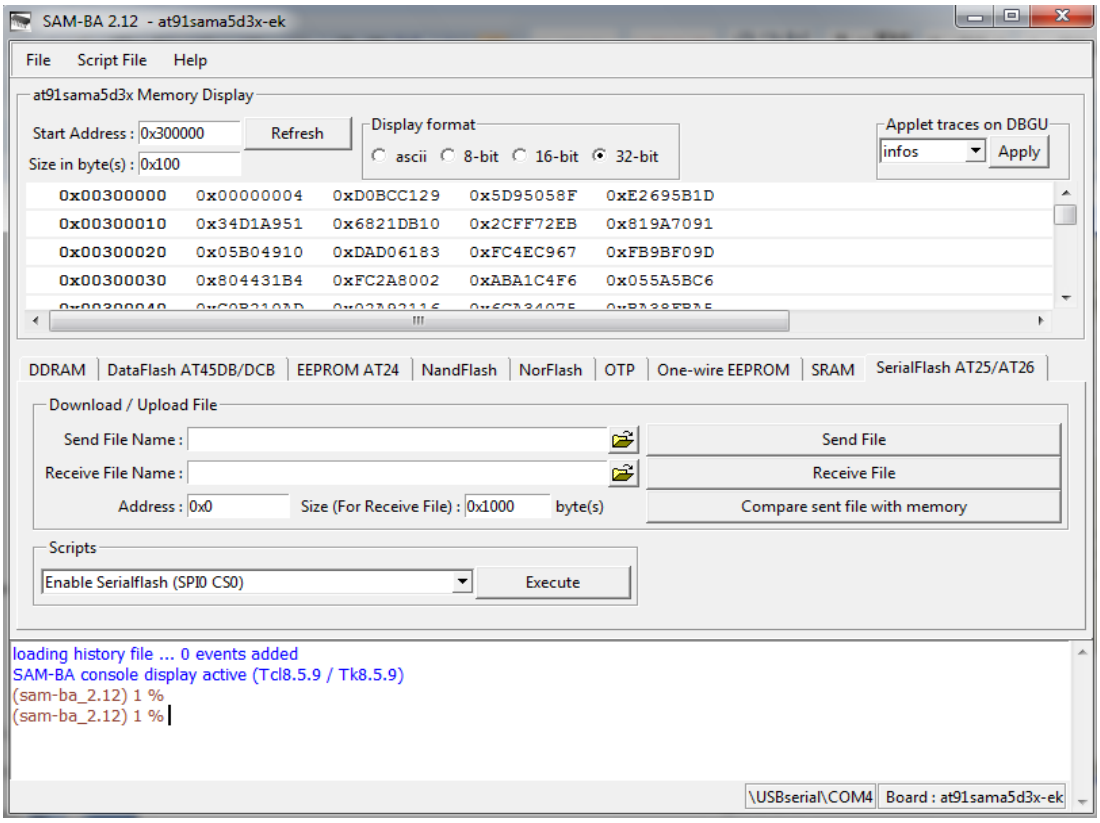

Figure 4-6

(3) Select NandFlash tab, enable NandFlash in Scripts tab and then click “Execute”.

Refer to figure 4-7:

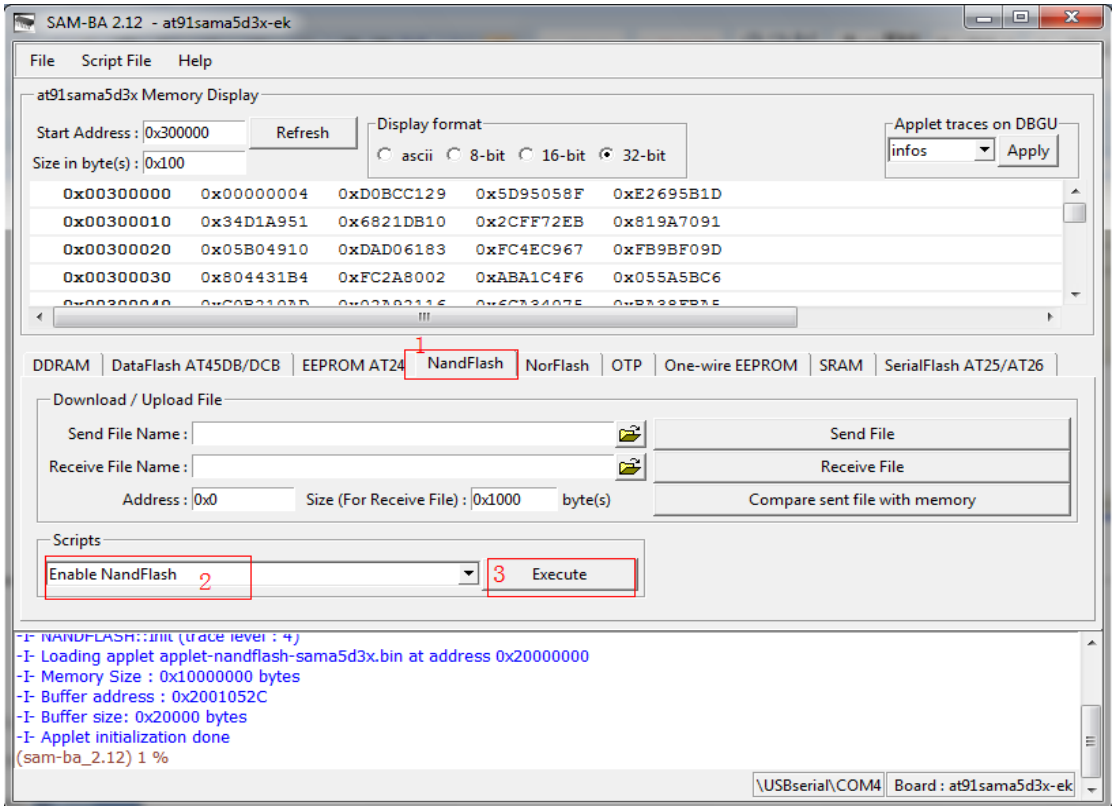

Figure 4-7

(4) Select Enable OS PMECC parameters in Scripts tab, then click Execute, using the default option, click “OK” directly (Note: there cannot check Trimffs). Refer to figure 4-8:

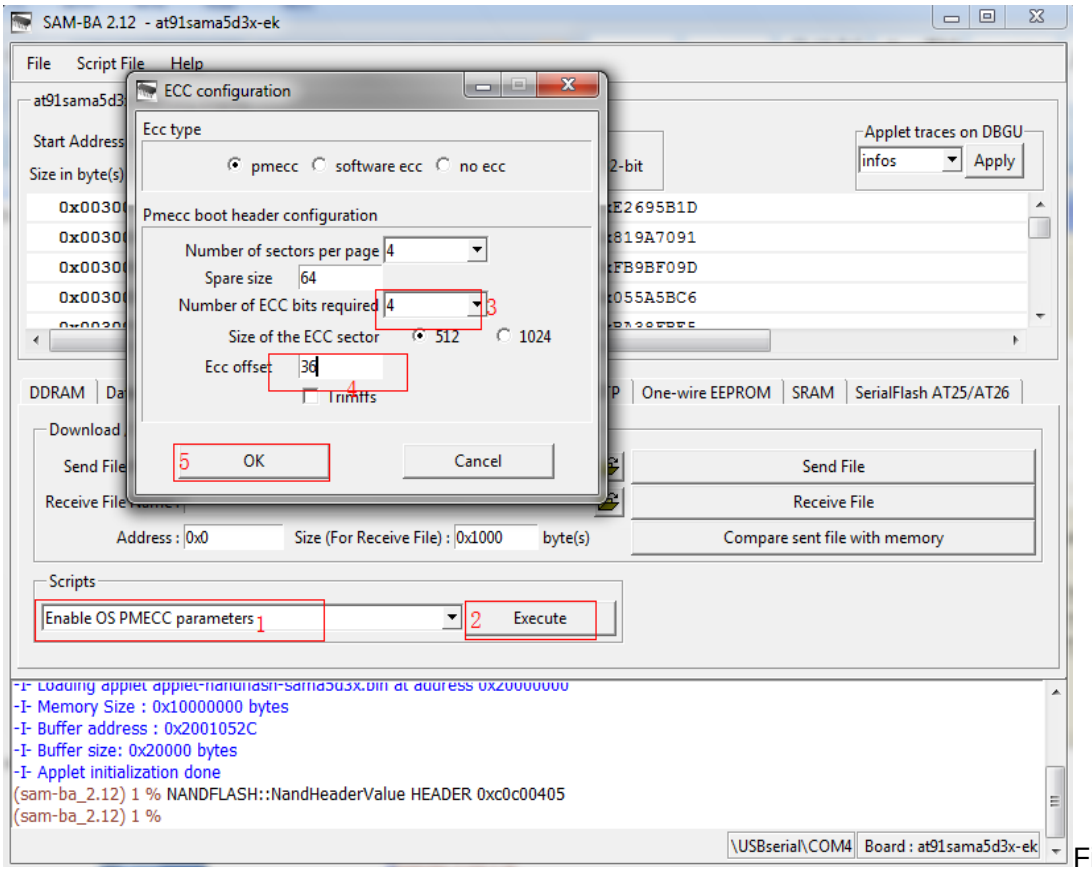

Fi

Figure 4-8

(5) Select Erase All in Scripts tab and then click Execute. Refer to figure 4-9:

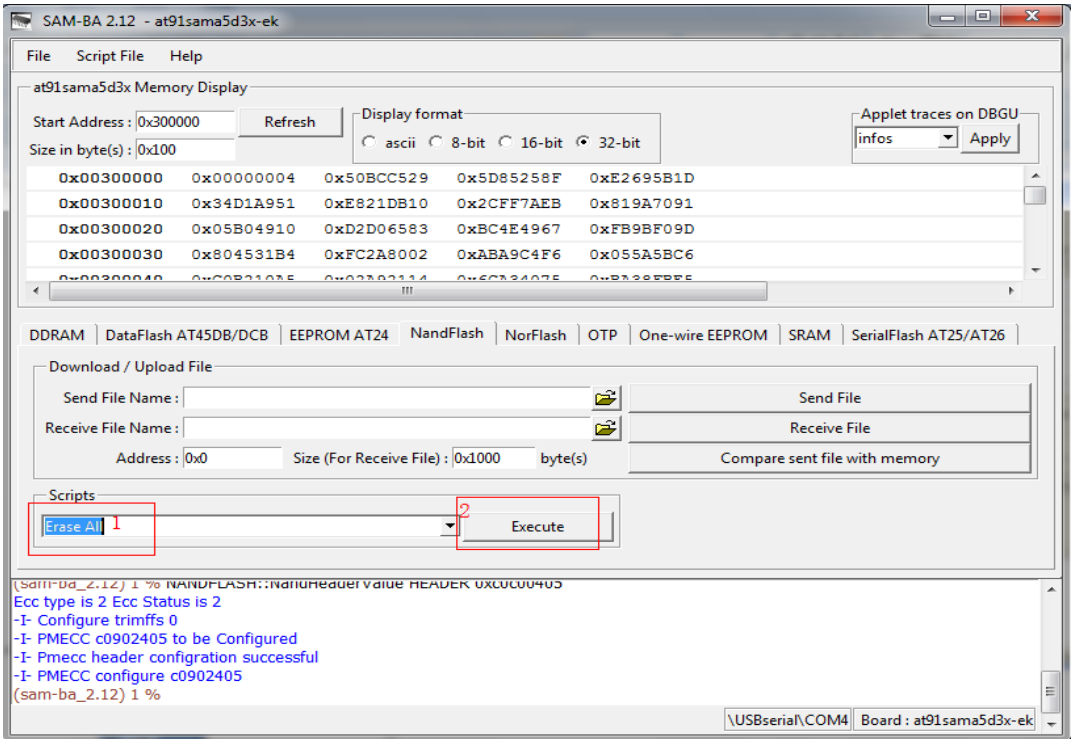

Figure 4-9

(6) Download [boot.bin]. Refer to figure 4-10, 4-11:

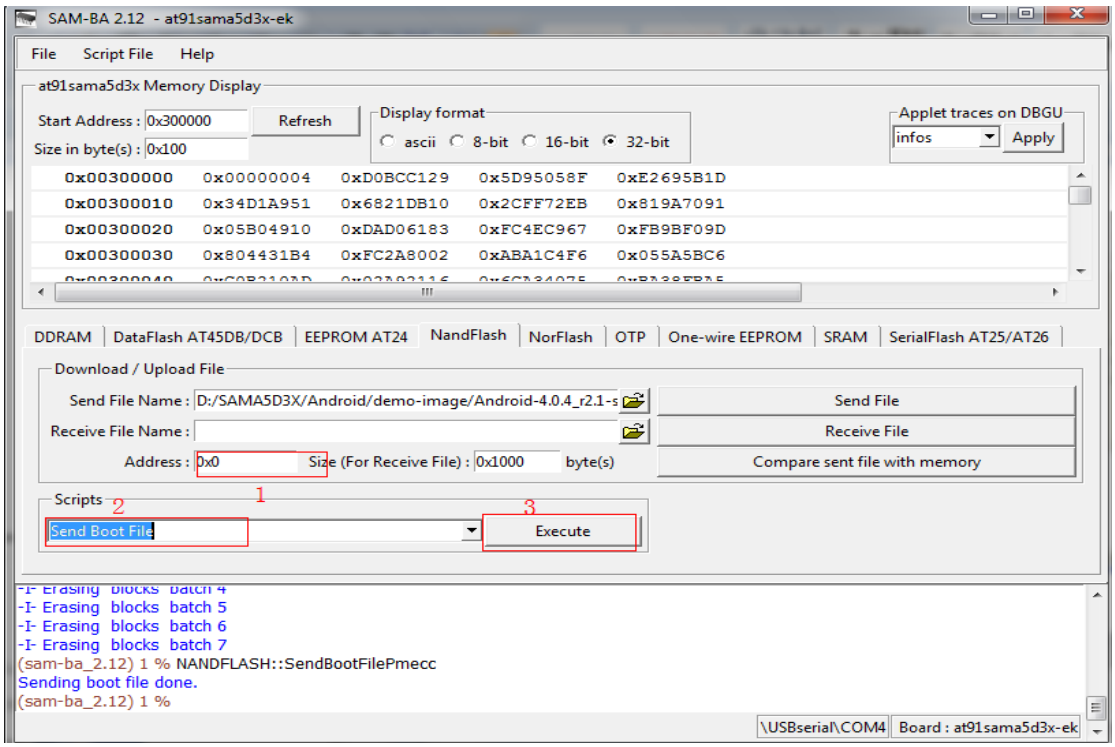

Figure 4-10

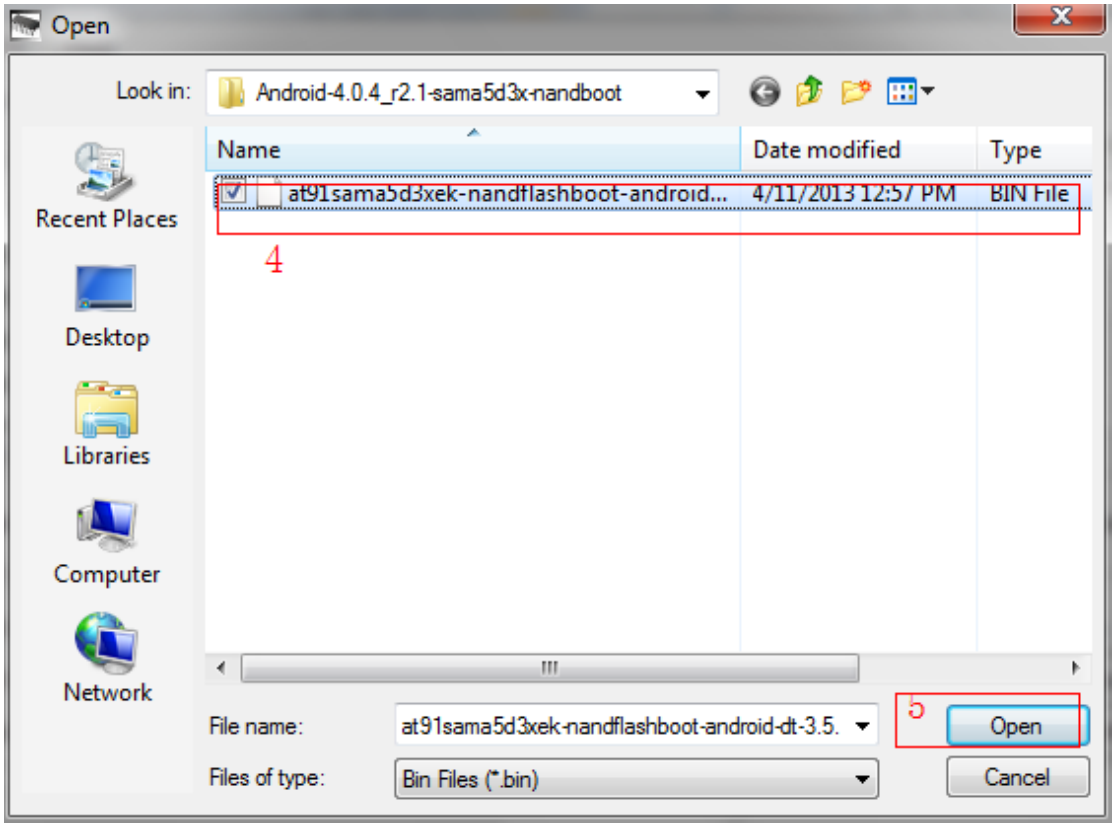

Figure 4-11

(7) Download [u-boot.bin] to 0x40000. Refer to figure 4-12:

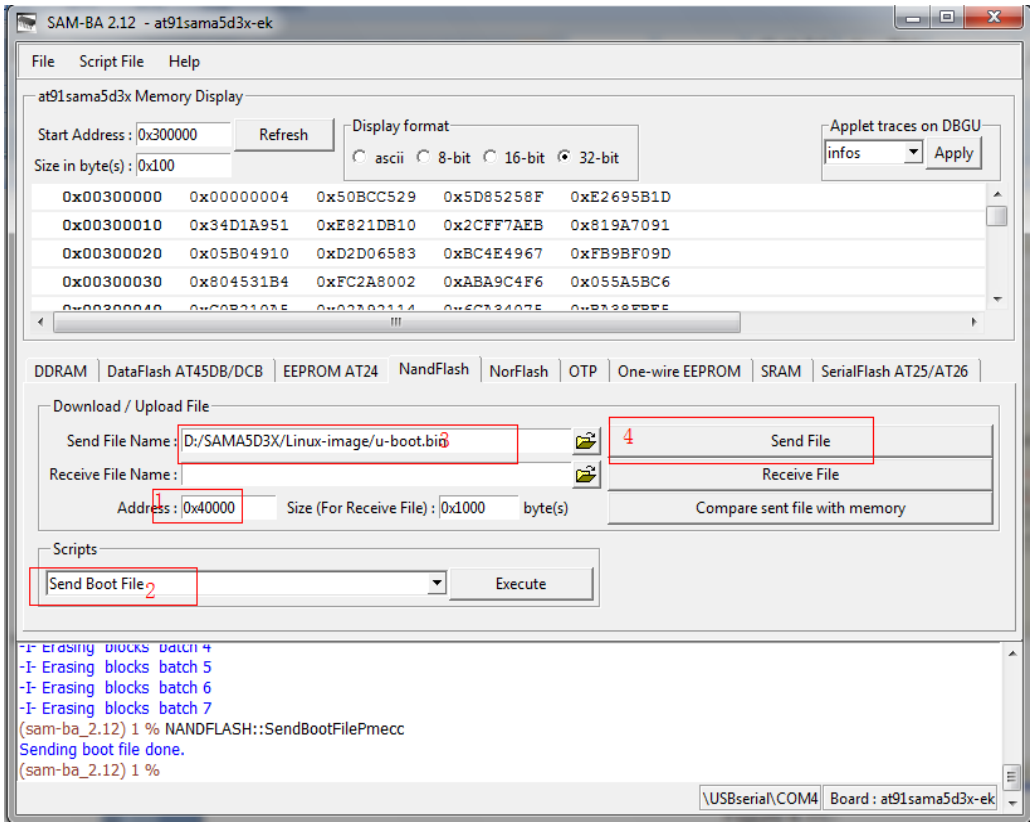

Figure 4-12

(8) Download [ubootEnvtFileNand-Flash.bin] to 0x000C 0000. Refer to figure 4-13:

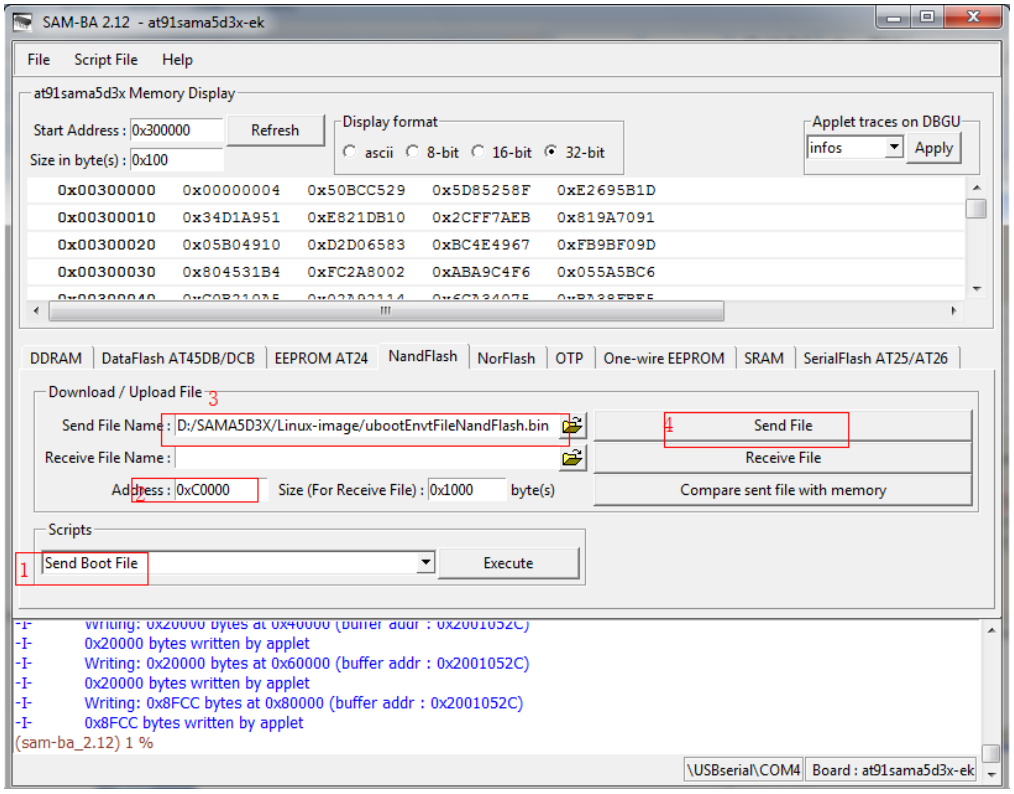

Figure 4-13

(9) Download [sama5d3xek.dtb] to 0x0018 0000 Department. Refer to figure 4-14:

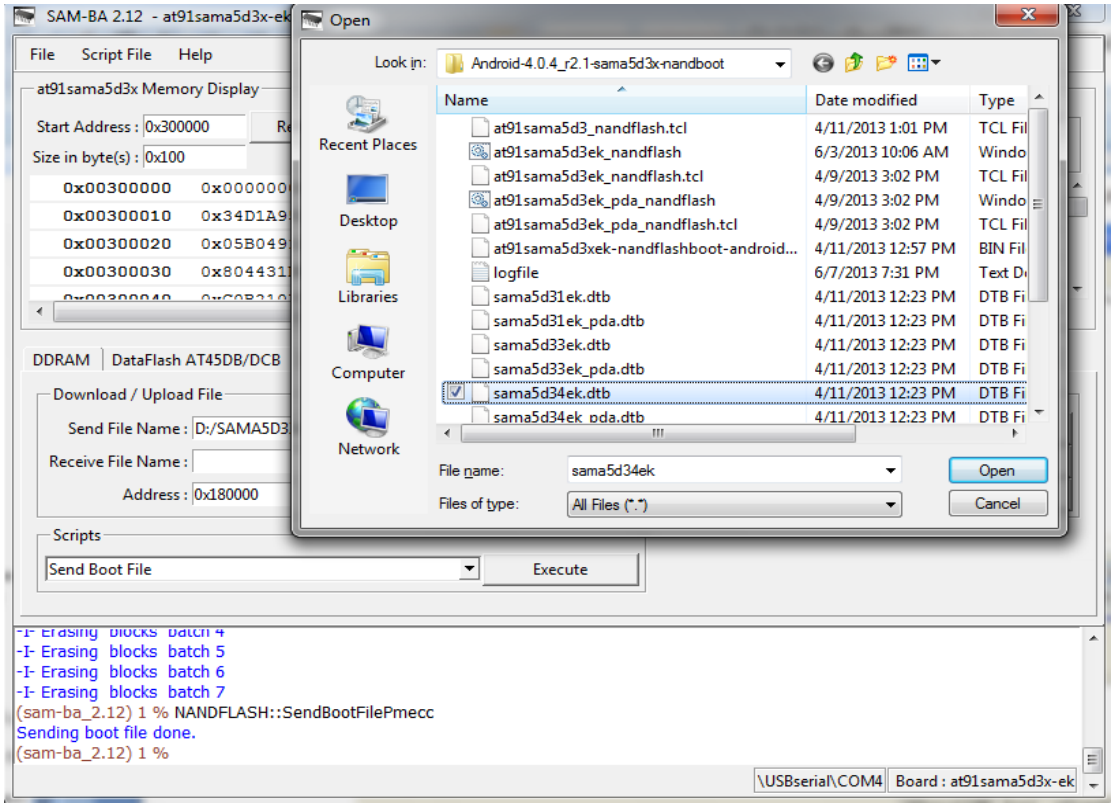

Figure 4-14

(10) Download Linux kernel [uImage] to 0x0020 0000. Refer to figure 4-15:

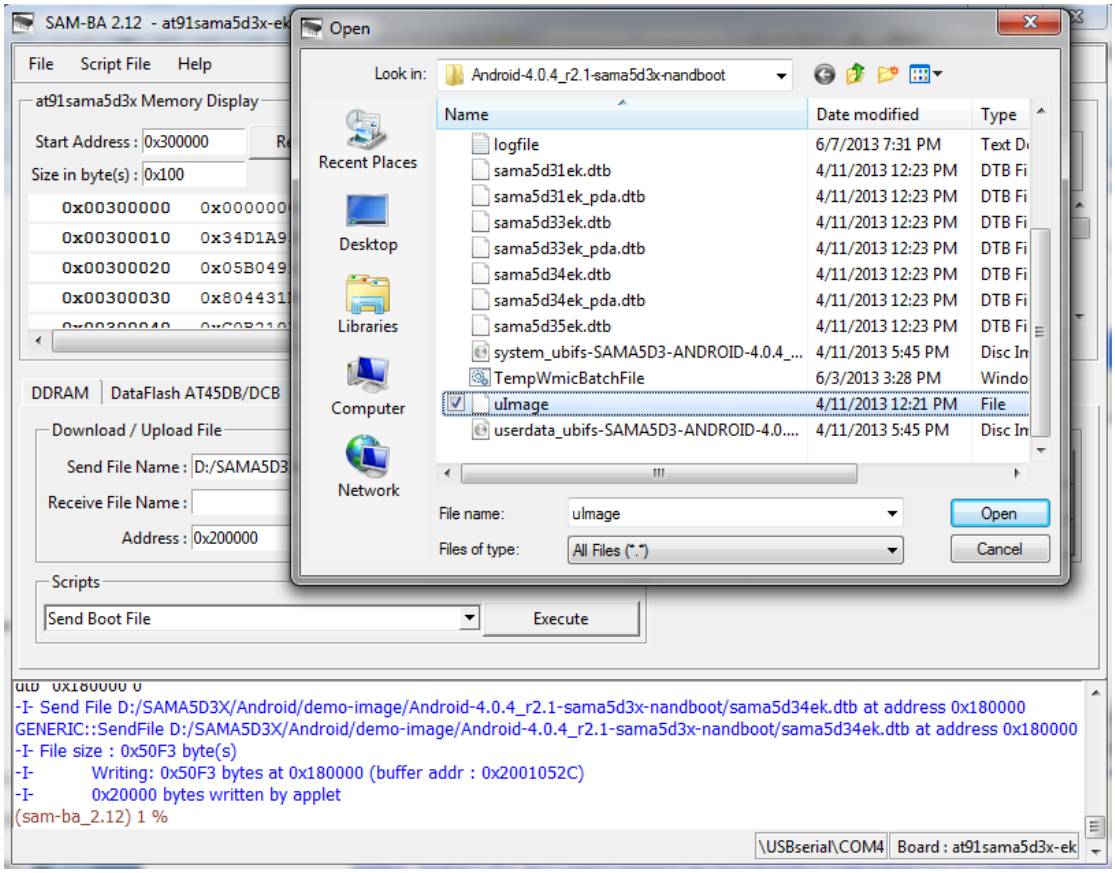

Figure 4-15

(11) Download [rootfs.ubi] to 0x0050 0000. Refer to figure 4-16(Note: be sure to check Trimffs):

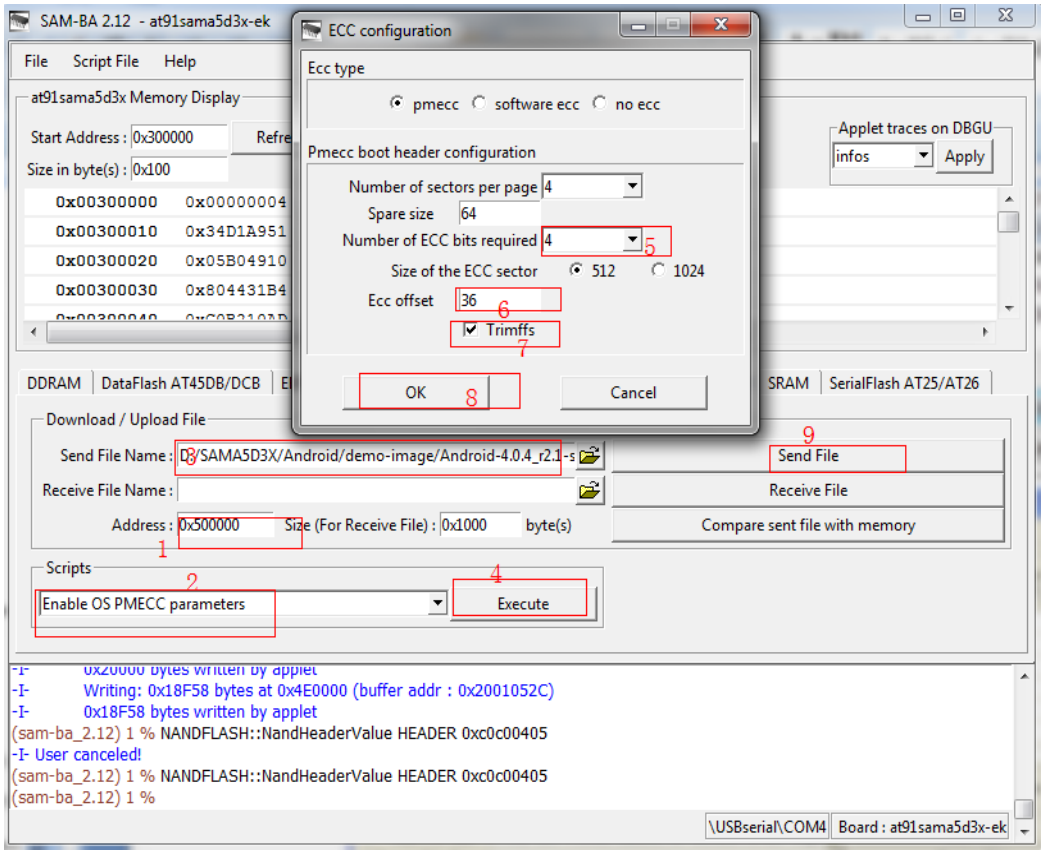

Figure 4-16

At this point, Android system image file download is completed, and press K1(Reset) key can restart Android system.

4.3.5 4.3-inch and 7.0-inch LCD configuration

Please refer to 3.3.5 4.3-inch and 7.0-inch LCD configuration. Please note that the Android kernel boot parameters are different with the Linux boot parameters, the Android kernel boot parameters are:

LCD_4.3:

```
console=ttyS0,115200 no_console_suspend
mtdparts=atmel_nand:8M(bootstrap/uboot/kernel)ro,-(rootfs) rw rootfstype=ubifs
ubi.mtd=1 root=ubi0:rootfs init=/init lcd=480x272
```

LCD_7.0:

```
console=ttyS0,115200 no_console_suspend
mtdparts=atmel_nand:8M(bootstrap/uboot/kernel)ro,-(rootfs) rw rootfstype=ubifs
ubi.mtd=1 root=ubi0:rootfs init=/init lcd=800x480
```

4.4 Compile Android System Files

This chapter will describe the compiled methods and steps of Android system files.

4.4.1 Android System Principle

(1) File description:

File	Description
boot.bin	Boot program Compiled by AT91 Bootstrap source used to start u-boot
u-boot.bin	The secondary boot for boot kernel
u-boot Env	Configure the environment variables, provided u-boot operation parameters
sama5d3x.dtb	Describe hardware device tree, u-boot DTB in the start-up will Flash when the address of the file as the entrance to the parameters passed to the kernel
uImage	Linux kernel file compiled by Linux kernel source code
rootfs.ubi	Android file system
flash_all.tcl	SAM - BA script files, control the burning process
flash_all.bat	Automatic programming tools (MS - DOS batch file, the manual programming process does not require this file)

Table 4-2

(2) The principle of the system

Power on, starts system form Nand-Flash, the start steps is as following:

① Fixed boot code in atsama5d3x internal rom and copy a boot program "at91SAMA5D3Xek-Nand-Flashboot-3.1.bin" in Nand-Flash to SRAM to run. Boot program initializes hardware basically, such as setting CPU frequency, configure running PIO, and then copy the secondary boot program "uboot.bin" to DDRAM and begin to Execute.

② Secondary bootloader uboot is mainly responsible for boot Linux, including set Linux operating environment, Load Linux image file uImage, pass startup parameters to Linux, last boot Linux to start.

③ When boot Linux kernel, Android file system will be mounted automatically. At this point, Android system is booted.

4.4.2 Compile System Files

Android system is running on Linux-based system, so if build Android system, set up a Linux- based platform firstly.

(1) Decompression cross compiler tool to"/usr/local.compile[AT91Bootstrap]"

To [at91SAMA5D3Xek-Nand-Flashboot-3.1.bin] ,compile u-boot to [u-boot.bin] refer to [3.5.1], [3.5.2], [3.5.3], [3.5.4].

(2) Compile Linux kernell used in Android system

Unzip Linux kernel to working directory:

```
# cp /media/cdrom/05-Android_Source/Linux-at91/linux-at91.tar.bz2 /opt/android
# cd /opt/android
# tar xvjf linux-at91.tar.bz2
# cd   linux-at91
```

Compile Linux kernel:

```
# ./make_image.sh   android-512mb
```

For products with 256MB DDR2, please replace "android-512mb" with "android-256mb".

Note: make uImage command requires compile environment installed uboot-mkimage tool; otherwise, use the following command to install tool:

apt-get install uboot-mkimage

After compile kernel, uImage in directory arch/arm/boot/ is Linux kernel programming

file. sama5d31ek.dtb, sama5d33ek.dtb, sama5d34ek.dtb, sama5d35ek.dtb is Android device tree image file what we need.

4.5 Android System Application

4.5.1 USB Keyboard Test

Insert USB keyboard to J24, press the NumLock key, when the lights in the upper-right corner turn green, it shows USB keyboard can be used as far as on PC to input.

4.5.2 Browse Picture Test

(1) Select "Gallery" icon. Refer to figure 4-15:

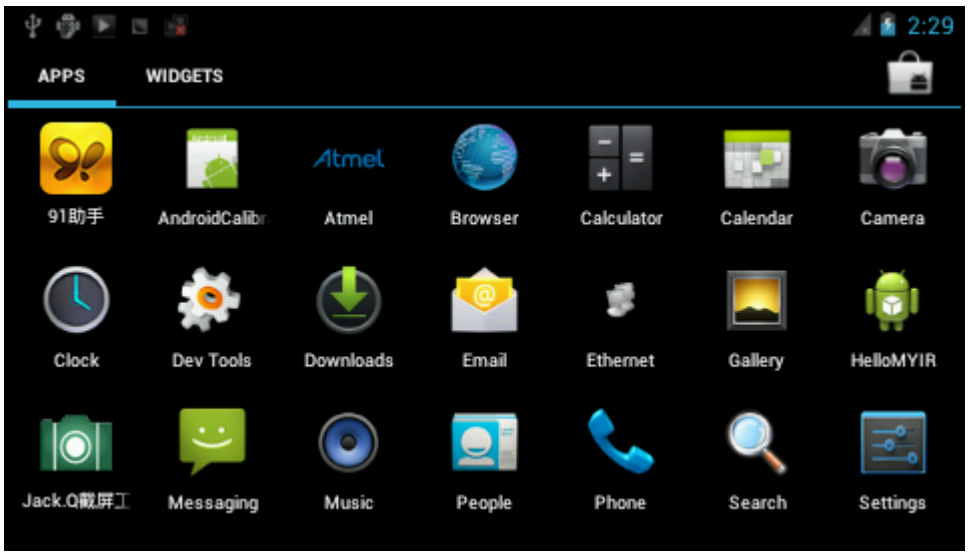

Figure 4-15

(2) Click “Gallery” and select a picture folder, Refer to figure 4-16:

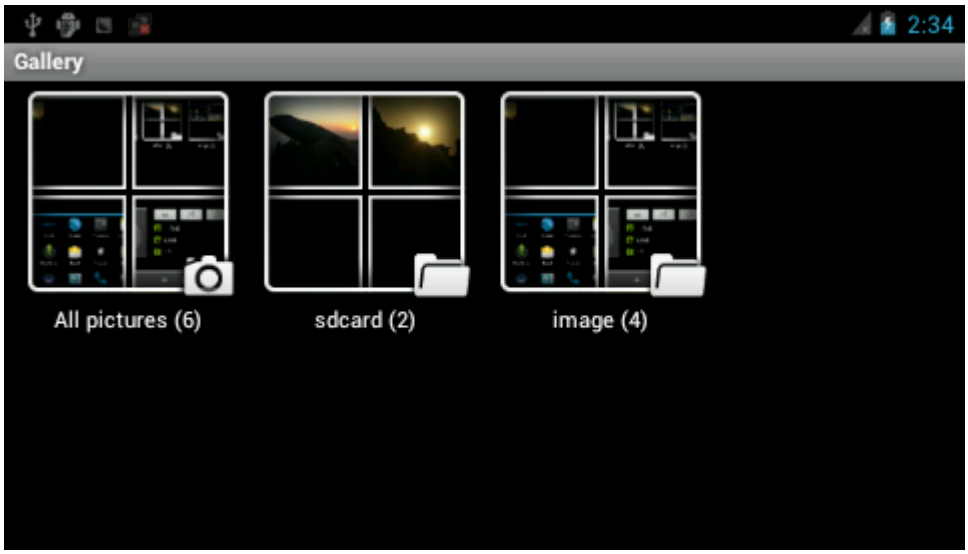

Figure 4-16

(3) View picture, the result is shown in figure 4-17:

Figure 4-17

4.5.3 Play Audio Test

(1) Enter interface and Select "Music" icon, Refer to figure 4-18:

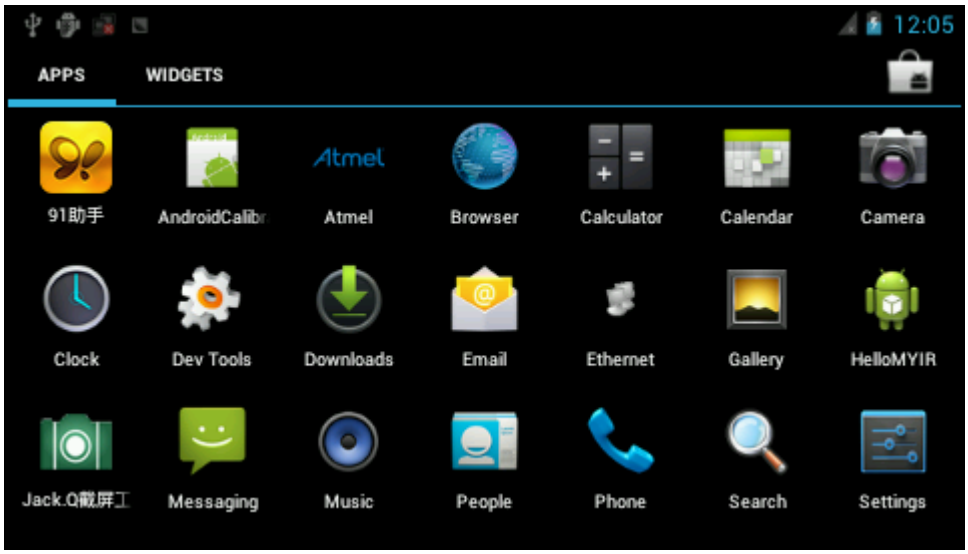

Figure 4-18

(2) Select "Songs" option. Refer to figure 4-19:

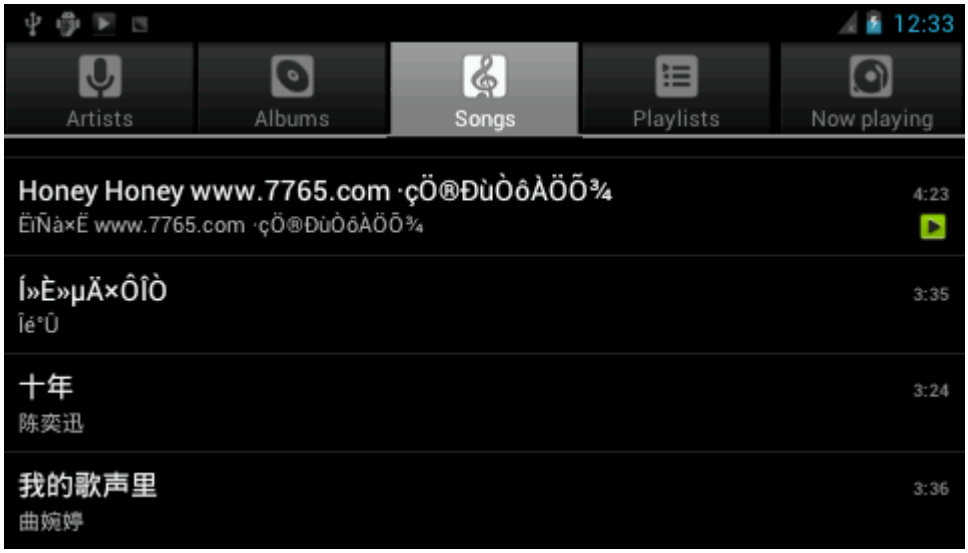

Figure 4-19

(3) Select a song to play. As shown in figure 4-20:

Figure 4-20

4.5.4 Ethernet Test

Note: Connect board to router by cable

(1) Enter interface and select icon "Ethernet", refer to figure 4-21:

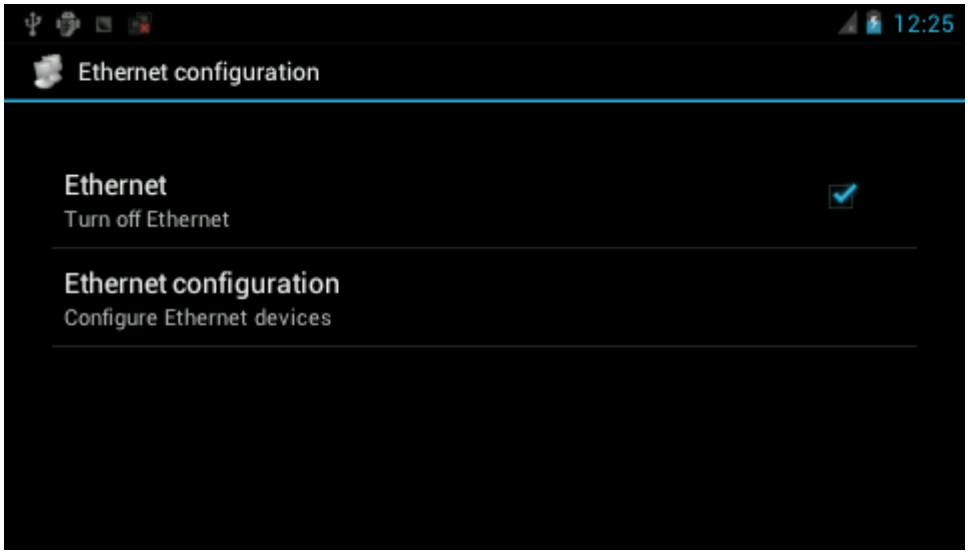

Figure 4-21

(2) Configure Ethernet, Select "Dhcp" to obtain dynamic IP. Otherwise, select "Static IP" to set IP address, subnet mask, DNS server, default gateway.. manually. Refer to figure 4-22:

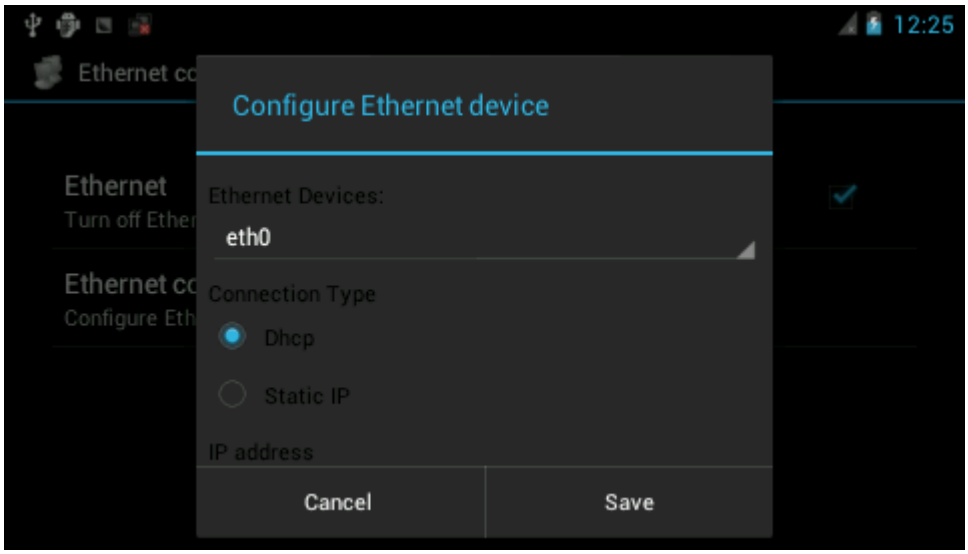

Figure 4-22

(3) After configure, input string: www.baidu.com. Refer to figure 4-23 figure 4-24:

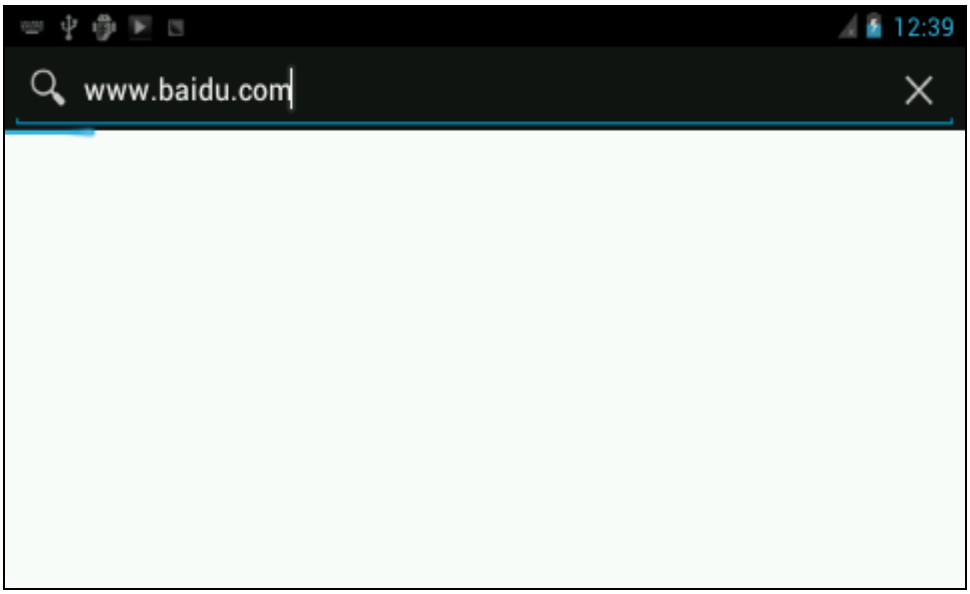

Figure 4-23

Figure 4-24

4.5.5 APK Test

The contents of this chapter please refer to **"Android development environment and use Eclipse.pdf"**.

Appendix 1 FAQ

Q1: Report "Connection \USBserial\COMxx not found" (XX: port number, and according to the situation such as host machine is COM13, then XX is 13), pop up logfile file contents. As shown below:

```
-I- Waiting ...
-I- TCL platform : Windows NT
-I- SAM-BA 2.12 on : windows
-I- Retrieved arguments from command line :
-I- argv 0 : \usb\ARM0
-I- argv 1 : at91sama5d3x-ek
-I- argv 2 : sama5d3xek_demo_linux_nandflash.tcl
-E- Connection \USBserial\COM13 not found
-E- Connection list : COM1
```

Analysis and Answers:

This problem happens due to SAM-BA connection failed, please follow steps:

① Development board switch to 5 v (power off-position)

② Through the micro-USB line connected to the PC and development board

③ Connect the CPU module jumper JP1, JP2 backboard disconnect, hold CS_BOOT button At the same time development board switches to USB_5v ress NRST reset board , then turn SW2 on, and then start download.

Display logfile file as follows:

```
-I- Waiting ...
-I- TCL platform : Windows NT
-I- SAM-BA 2.12    on : windows
-I- Retrieved arguments from command line :
-I- argv 0 : \usb\ARM0
-I- argv 1 : at91sama5d3x-ek
```

```
-I- argv 2 : sama5d3xek_demo_linux_nandflash.tcl
-E- Connection \USBserial\COM3 not found
-E- Connection list : {\USBserial\COM13} COM1
```

It indicates that port isn't right, as above -I - argv 0: \ USBserial \ COM3 " , but connections list is "-E-Connection list: {\ USBserial \ COM13} COM1 " which shows native port is COM13 not COM3 and it needs to modify COM port (Note: COM port is that your host use).

Q2: Download system successfully, but can not start system.

Analysis and Answers:

If download Linux image to board with SD card mounted, system might fail to start and show following message on Hyper Terminal. Please unplug SD card and try to download Linux image again.

```
NAND read: device 0 offset 0x200000, size 0x250000
atmel_nand : one bit error on data. (data byte : b8, in page offset : 368, bit offset : 0x5)
atmel_nand : error corrected
atmel_nand : one bit error on data. (data byte : 71, in page offset : 1, bit offset : 0x5)
atmel_nand : error corrected
atmel_nand : one bit error on data. (data byte : f9, in page offset : 160, bit offset : 0x5)
atmel_nand : error corrected
atmel_nand : one bit error on data. (data byte : 60, in page offset : 437, bit offset : 0x5)
atmel_nand : error corrected
atmel_nand : one bit error on data. (data byte : 74, in page offset : 436, bit offset : 0x5)
atmel_nand : error corrected
atmel_nand : one bit error on data. (data byte : a0, in page offset : 340, bit offset : 0x5)
atmel_nand : error corrected
 2424832 bytes read: OK
## Booting kernel from Legacy Image at 22000000 ...
Bad Header Checksum
ERROR: can't get kernel image!
U-Boot>
```

Q4: Automatic download for a long time, HyperTerminal did not continue to output download information.

Analysis and Answers:

This may be stuck in automatic download process. It can end sam-ba.exe process in task manager and then restart download.

If start SAM-BA v2.11, Click Connect and pops up the following window when in automatic download:

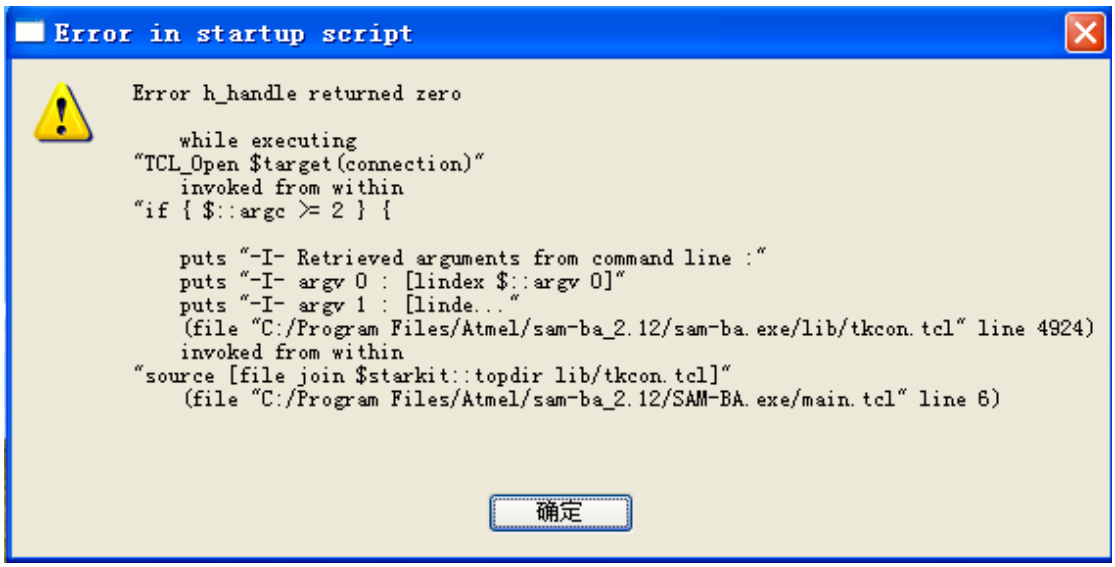

This failure might be caused by duplicated running SAM-BA, please end duplicated SAM-BA process and try again.

Appendix 2 sales FAQ and technical support

How to buy

We accept paypal payment and bank wire transfer

1. **Paypal payment**

Please select the products add into shopping cart, the checkout web page will redirect to paypal.com for you payment. Shipment fee will calculated automatically by your location region.

2. **Bank wire transfer**

Please email or fax us with products list you want, we will send you a pro-invoice with order value total, shipping cost and bank information.

Shipping details

Please select the shipping area catalogue for you location. If you have carrier account to pay the shipment fee, please select "Freight collect" and email us the carrier account.

Please visit http://www.myirtech.com/support.asp for more details

Noted

1. The shipment will start in 3 biz days by Fedex Express, it usually take 7 days to reach regular cities or regions.
2. We will use DHL Express for West asia or middle east countries, it usually take 7 days to reach regular cities or regions.
3. The remote regions defined by Fedex/DHL may cause delay, 14 days in generally.
4. Some countries have strict import policy, we will help to make shipping invoice with you requirement, like invoice value, trade term, custom statements and H.S code etc. Please contact us with these shipment requirements if your country has strict custom affairs.

Support and maintains

MYIR provides 12 months warranty for hardware products if the defects or failures were not caused by wrong use.

Return steps for defective products

1. Please email or call us get a Return Merchandise Authorization (RMA) by providing purchase details and reasons for return (defective, incorrect etc).
2. MYIR will make a shipping invoice (list value total, item description etc) for you return request. China have strict limit on return products, so please use MYIR's shipping invoice to return items to avoid custom delay.

Contact:

Tel:+86-0755-22929657 Fax: +86-0755-2553 2724

Mail to: sales@myirtech.com support@myirtech.com

Website: www.myirtech.com