BULK CARBON DIOXIDE SUPPLY SYSTEMS
MVE MODELS CARBO-MAX™ 750 & 450 Mc DONALD'S

Place this manual in the Beverage section of the Equipment Manual.

MANUFACTURED
FOR
McDONALD'S™
BY

Chart Inc.
407 7th Street N.W.
New Prague, MN 56071-1000
TELEPHONE: 952-758-4484
FAX: 952-758-8275

TABLE OF CONTENTS

January 2010

Printed in USA
CHART P/N 14347902

User Manual

Carbo-MAX™ 750 • Carbo-MAX™ 450
McDONALD'S™

Warranty

WARRANTY POLICY

Chart Inc. ("Chart") warrants to McDonald's™ Corporation (or its franchisee that issues a purchase order to Chart) (the "Purchaser") that the McDonald's Carbo-Max™ Bulk CO_2 System equipment (the "Equipment") shall be free from any defects in workmanship and materials; provided, however, that this warranty shall be limited to Equipment found to be defective within a period of one (1) year from initial use or eighteen (18) months from the date of shipment, whichever expires first, except that parts sold as a spare or for replacement are warranted for ninety (90) days from the date of shipment. Chart also warrants the vacuum in the Equipment for five (5) years from the date of the original Chart invoice. Chart warrants that its services will be performed in a professional and workmanlike manner. All Chart services are warranted for a period of ninety (90) days from the date of their completion.

Purchaser agrees that as a pre-condition to any Chart liability hereunder, Purchaser or its appointed agents shall fully inspect all Equipment immediately upon delivery and shall give Chart written notice of any claim or purported defect within ten (10) days after discovery of such defect.

As a further pre-condition to any Chart liability hereunder, an approved Chart service company must supply both parts replacement and labor and Purchaser must strictly adhere to the Warranty Claims Procedure set forth below. Chart's sole and exclusive liability under this limited warranty is to the original Purchaser only and is, at Chart's sole option: (1) repair or replacement of the defective Equipment or parts thereof; or (2) refund the net purchase price of the defective Equipment or parts thereof paid by the original Purchaser; or (3) in the case of nonconforming services, provide equivalent services or refund the net price paid by the original Purchaser for such services. Chart shall not be responsible for providing working access to the defect, including disassembly and reassembly of Equipment or for providing transportation to and from Chart's repair or factory facility, all of which shall be at Purchaser's risk and expense.

This limited warranty does not apply to Equipment that Chart determines to have been caused by the effects of normal wear and tear, erosion, corrosion, fire, flood, explosion or other excessive external forces, misuse, abuse, negligence or accident. Alterations or repairs by any party other than those designated and approved in writing by Chart, or installation, storage, maintenance or operation of such Equipment in a manner inconsistent with Chart accepted practices, normal operating instructions, specifications and drawings, or outside the specified design conditions, unless pre-authorized in writing by Chart, shall void this limited warranty. Modifications in any way to the Equipment without Chart's prior written approval shall render this warranty void. This limited warranty does not apply to Equipment comprised of materials provided or a design stipulated by Purchaser or to Equipment purchased used. Negligent handling of the vacuum by the Purchaser or others, or testing of the vacuum levels by any party other than a Chart designated and approved party shall render the vacuum warranty void.

Repairs or replacements made pursuant to warranty shall not renew or extend the applicable original warranty period; provided however, that any such repairs or replacement of Equipment or parts thereof shall be warranted for the time remaining in the original warranty period or thirty days, whichever is longer.

Individual parts replacements under warranty and with a component list price less than $50.00 will be replaced at no charge. Individual component costs exceeding $50.00 that are replaced under warranty will be invoiced to the Purchaser and the Purchaser will be issued credit based on results of Chart's evaluation of the returned component(s). The Return Material Authorization (RMA) process must be initiated prior to shipment of any replacement parts.

Chart is not liable for component replacement labor exceeding 2 hours for actual replacement and 2 hours travel time (4 hours @ $65.00/hour maximum).

CHART SPECIFICALLY MAKES NO WARRANTIES OR GUARANTEES, EXPRESSED OR IMPLIED, INCLUDING THE WARRANTIES OF MERCHANTABILITY OR FITNESS FOR A PARTICULAR PURPOSE OR USE, OR WARRANTIES ARISING FROM COURSE OF DEALING OR USAGE OF TRADE, WHICH ARE ALL EXPRESSLY DISCLAIMED, OTHER THAN LIMITED WARRANTIES EXPRESSLY SPECIFIED HEREIN.

IN NO EVENT SHALL CHART BE LIABLE FOR ANY SPECIAL, INDIRECT, INCIDENTAL OR CONSEQUENTIAL DAMAGES, INCLUDING BUT NOT LIMITED TO LOSS OF PROFITS, LOST OPPORTUNITY, LOSS OF USE OF THE EQUIPMENT, CO_2 LOSS, COST OF CAPITAL, COST OF SUBSTITUTE EQUIPMENT, DOWNTIME COSTS, COSTS OF DELAYS NOR FOR ANY PENALTIES, WHETHER ANY SUCH CLAIM FOR THE SAME IS BASED ON CONTRACT, WARRANTY, TORT, NEGLIGENCE, STRICT LIABILITY OR OTHERWISE. CHART'S LIABILITY FOR ANY SUCH CLAIMS WHETHER IN CONTRACT, WARRANTY, NEGLIGENCE, TORT, STRICT LIABILITY, OR OTHERWISE OR FOR ANY LOSS OR DAMAGE ARISING OUT OF, CONNECTED WITH, OR FROM ANY DESIGN, SALE, INSTALLATION, OPERATION OR USE OF THE EQUIPMENT OR PERFORMANCE OF ANY SERVICES RENDERED BY CHART, SHALL IN NO EVENT EXCEED THE PURCHASE PRICE PAID TO CHART BY PURCHASER FOR THE SPECIFIC EQUIPMENT OR PART THEREOF OR FOR THE SERVICES GIVING RISE TO THE CLAIM. PURCHASER AGREES TO DEFEND, INDEMNIFY AND HOLD CHART HARMLESS FROM ANY THIRD PARTY CLAIMS ARISING OUT OF THE USE, SALE, OR LEASE OF THE EQUIPMENT.

This Warranty Policy is not intended to replace or supersede the warranties, limitations, exclusive remedy and disclaimers set forth in Chart's Terms and Conditions of Sale. In the event of a conflict between Chart's Terms and Conditions of Sale and this Warranty Policy, this Warranty Policy shall control.

WARRANTY CLAIMS PROCEDURE

1. All warranty claims must be previously authorized by: Chart Inc. Telephonic / electronic approval may be obtained by contacting Chart's MVE Beverage Systems Technical / Customer Services at:

- Telephone: 800-247-4446
  800-253-1769
  (Toll free in U.S.)
- Facsimile: 952-758-8275

or by writing to:

Chart Inc.
MVE Beverage Systems
Storage Systems Division
407 Seventh Street N.W.
New Prague, MN 56071-1000
USA

2. Authorization must be obtained from Chart prior to shipping any Equipment to Chart facilities. In order to process the return of a vessel its model and serial number must be provided. If approved, a Return Material Authorization (RMA) number will be provided. The RMA number must be prominently indicated on the packing slip and any packaging that accompanies the goods being returned. The customer returning the goods is responsible for all freight, proper packing, and any damage incurred during shipment of the goods back to Chart.

Safety Precautions

IMPORTANT SAFETY PRECAUTIONS

The type of vessel described in this manual holds and dispenses carbon dioxide (CO_2) gas under pressure. All persons using this equipment must read and understand the operation and safety information contained in this manual and must be adequately trained to operate this equipment.

CO_2 gas is a colorless, odorless, tasteless gas

WARNING

SUFFOCATION HAZARD.

CARBON DIOXIDE GAS can cause SERIOUS INJURY OR DEATH.

DO NOT BREATHE CARBON DIOXIDE GAS.

AVOID ENTERING canister area if a leak is suspected. THOROUGHLY VENTILATE area.

FROSTBITE HAZARD.

CONTENTS ARE EXTREMELY COLD and can cause FROSTBITE.

DO NOT TOUCH liquid, ice, or ice crystals on or near canister.

STAY AWAY from escaping gas.

that displaces oxygen and does not support life. The gas is difficult to detect without special equipment. Avoid breathing or contacting CO_2 in gas, liquid or solid form. **EXPOSURE TO CONCENTRATIONS OF LESS THAN 5% FOR LESS THAN 15 MINUTES CAN CAUSE PHYSICAL SYMPTOMS INCLUDING UNCONSCIOUSNESS, INJURIES OR DEATH.** Even low concentrations of CO_2 can cause:

- Dizziness, headaches, nausea or disorientation
- Increased respiration or heart rate
- Shortness of breath or rapid suffocation.

CO_2 is heavier than air and can collect in low areas such as basements, stairwells, and confined spaces. Avoid entry into areas where CO_2 leaks or high concentrations of CO_2 are suspected. Enter those areas with caution only after they have been thoroughly ventilated.

Whenever the vessel is inside a building, that vessel's safety relief circuit must be connected to an outdoor vent; typically in the fill box. The fill box and/or vent must never be located in or above any below-ground spaces or stairwells. The vessel must not block emergency exits, aisles, fire suppression equipment or utility boxes or accesses. CO_2 lines or hoses must be located away from traffic areas and heat sources and must be protected from potential causes of damage. All connections, lines, and components must be leak-free.

This equipment should be installed and serviced only by professional personnel who are qualified to work with CO_2 and the mini-bulk liquid CO_2 pressure vessels. They should be familiar with all pertinent safety procedures.

FIRST AID AND EMERGENCY ACTION

If inhaled:

- Move to fresh air immediately.
- If not breathing, give artificial respiration.
- If breathing is difficult, give oxygen.
- Get immediate medical attention.

In case of frostbite:

- End exposure immediately.
- Do not rub or pour water on the affected area.
- Get immediate medical attention.

Rescue:

- Do not attempt a rescue in areas of high CO_2 concentrations without proper life-support or rescue equipment. (Avoid being the next victim.)
- Thoroughly ventilate areas of possible high CO_2 concentration before entering them.

In case of spills or leaks:

- Evacuate all personnel immediately from affected areas.
- Thoroughly ventilate the area of the spill or leak before entering.
- CO_2 is heavier than air. It displaces oxygen and will collect in low or confined areas.

FOR MORE INFORMATION CONTACT:

Local CO_2 supplier

or

Compressed Gas Association
725 Jefferson Davis Highway, Suite 1004
Arlington, VA 22202-4100 USA
Telephone: (703) 412-0900
FAX: (703) 412-0900

General Description

System Overview

The Carbo-Max carbon dioxide (CO_2) system for McDonald's restaurants is designed for low-pressure storage and supply of carbon dioxide gas for beverage carbonation and equipment operation. The supply system consists of three primary elements: the CO_2 storage vessel, an outdoor fill box, and fill and vent lines.

Storage Vessel

The Carbo-Max CO_2 storage vessel is the main component of the three primary elements in the CO_2 supply system. It consists of an inner vessel and an outer vessel constructed much like a giant Thermos™ bottle. The space between the two vessels contains a nearly perfect vacuum and a special insulation. The vacuum and insulation minimize the entry of unwanted heat into the liquid CO_2 stored in the inner vessel. When CO_2 gas is needed, liquid CO_2 is withdrawn from the inner vessel, converted to gas and dispensed to the beverage system or other use point.

Vessel Plumbing

Plumbing components on the vessel perform five functions:

- Liquid CO_2 fill (valve)
- Gas supply (gas delivery regulators)
- Pressure maintenance ("Economizer" regulator)
- Safety (Vent/Relief valves)
- Pressure and contents measurement (gauges)

The fill circuit allows liquid CO_2 to be transferred into the vessel during the delivery process. The gas supply circuit dispenses CO_2 gas to the beverage and syrup systems. A pressure control circuit maintains the internal vessel pressure needed to supply CO_2. The vent/relief circuit allows excess pressure to safely exit the vessel and the building. Contents and pressure gauges indicate the status of the CO_2 inside the vessel and the gas supply lines.

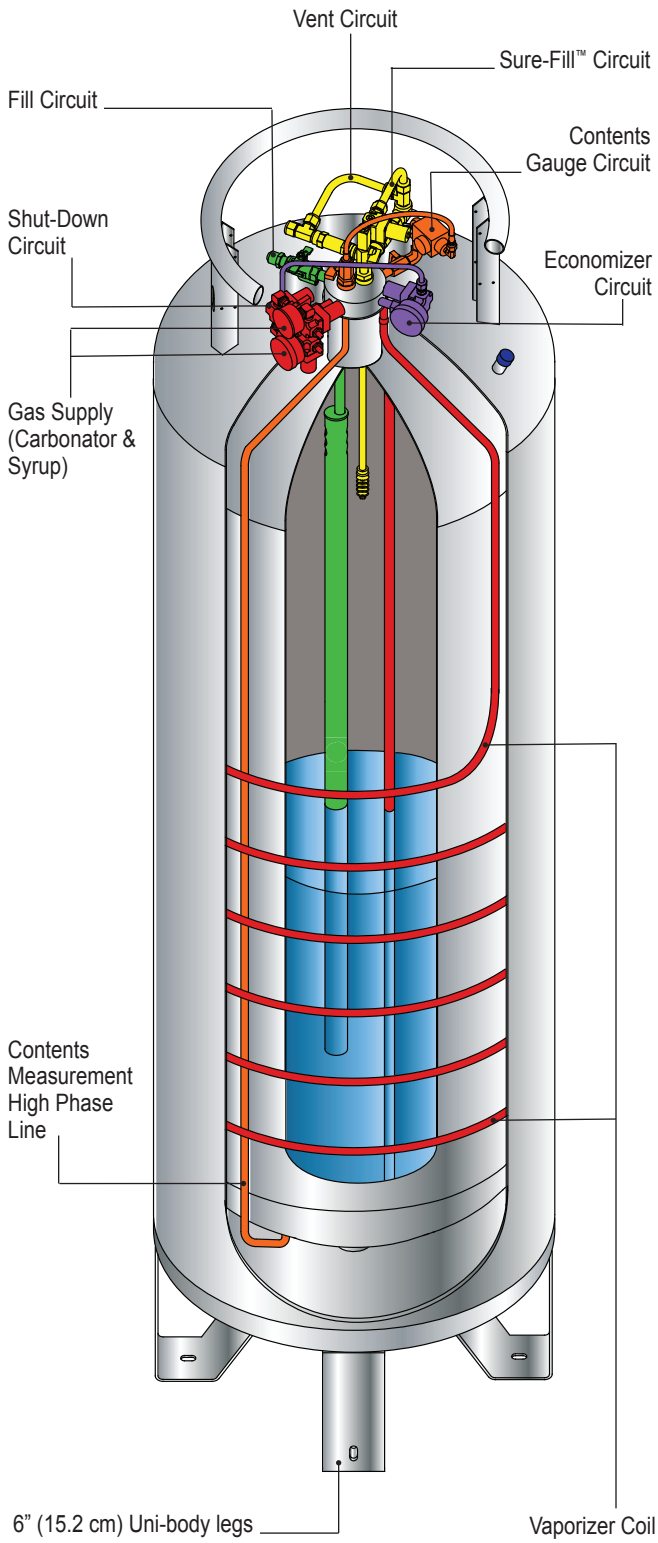

Fill Circuit

The stationary fill circuit consists of a brass fill fitting in a remote fill station (box), a fill hose, a valve on the vessel, and a Sure-Fill™ pressure relief assembly. Liquid CO_2 is delivered to the vessel through the brass fitting in the fill box and through the transfer hose to the vessel. The shut-off valve on the vessel's fill port allows service to be performed on the fill-box / fill-line segment of the fill circuit without emptying the vessel. An optional direct fill circuit consists of a brass fill fitting and bracket secured to the fill port of the vessel.

The Sure-Fill vent assembly enables fast, trouble-free filling without needing to manually vent excess pressure that develops during a CO_2 delivery. The Sure-Fill automatically maintains the optimum internal pressure during the fill process by venting excess pressure outdoors through the safety vent and fill box. It also automatically stops the fill process when the vessel is full.

Gas Use Circuit

The gas-use circuit supplies gas to the carbonator, the syrup systems, and other beverage equipment. Liquid CO_2 stored in the vessel is converted to gas in the vaporizer portion of this circuit. The CO_2 gas then passes through the shut-down circuit valve into the respective final line regulator and is dispensed to the end use point as needed.

Final line regulators in the gas-use circuit control gas flow to the beverage and syrup systems. The factory setting on the carbonator gas supply regulator is 110 psi but the pressure may be adjusted to suit the needs of the application. This regulator is commonly set between 90 psi and 115 psi for soft drinks. Secondary pressure regulators may be added 'downstream' for applications such as bag-in-the-box or diet systems. The syrup gas-use regulator is set at 65 psi for the syrup system. The use-point equipment manufacturer should be consulted for the correct regulator and pressure setting.

Pressure Control Circuit

The pressure control circuit, also called the "Economizer" circuit, assists in regulating the internal operating pressure of the vessel. Adequate vessel pressure is needed for supplying CO_2 gas and for preventing the stored liquid carbon dioxide from changing to dry ice, the solid form of CO_2. However, internal pressure that is too high can cause venting, wasted gas, and difficulties refilling the vessel. The Economizer circuit is designed to prevent excess pressure and the waste of CO_2 gas.

The "Economizing" process is controlled by a regulator that monitors the vessel's internal pressure. When the vessel pressure exceeds the set point of the regulator (factory set at 140 psi) the regulator opens allowing CO_2 gas to flow directly into the gas use circuit whenever CO_2 gas is being used. By taking excess gas from the top of the vessel instead of converting liquid from the bottom, the internal pressure of the tank is reduced and controlled.

Safety Vent Circuit

The inner pressure vessel of this storage system is designed to meet or exceed the ASME Section VIII, Division 1 pressure vessel code. The code dictates that the vessel be protected against excess pressure by a safety relief valve. Chart uses two safety relief valves for added safety. The vessel's safety circuit is comprised of an ASME relief valve set at 300 psig and an additional relief valve set at 450 psig. The relief valves must always be vented outdoors by a vent tube, usually through the fill box, to prevent potential concentration of CO_2 within the building. The 300 psig relief valve may open during CO_2 deliveries or when CO_2 is not being used regularly.

Pressure And Contents Gauges

The vessel pressure gauge measures the pressure in the top (gas space) of the inner vessel. The normal operating pressure range is 140 to 165 psig though pressures up to 300 psig may be seen for a short period after a tank-fill.

The vessel's contents gauge is a mechanical device that uses pressure to measure liquid level inside the tank. The measurement is accomplished by comparing two pressures; the "low phase" pressure consisting of the tank's gas space pressure and the "high phase" pressure consisting of tank pressure plus pressure created by weight of the liquid inside the tank. The difference between the "high phase" and "low phase" pressures is translated by the gauge mechanism to a dial reading displaying the quantity of liquid CO_2 inside the tank.

Fill Box

The stainless steel CO_2 fill box is the second major element in a typical bulk CO_2 storage system. The purpose of the fill box is to provide a convenient point to fill the storage vessel, to make connections for syrup delivery, and to vent excess pressure from the vessel out of the building. The fill box has a brass fill fitting, a connection for the safety relief vent circuit, a safety snap connection point, and a lockable door. Two standard types of fill boxes are available; a surface-mount model and a flush-mount model.

Fill boxes must be mounted outside the building where they are easily accessible to the CO_2 supplier and where they can safely vent excess CO_2 pressure outdoors. When a vessel needs to be moved to accomplish a fill, a vessel-mounted direct fill fitting and an alternative safety relief vent line are used instead of the fill box.

Fill Hose And Vent Line

The third major element of a stationary bulk CO_2 system is comprised of a fill hose and vent line. These lines join the CO_2 storage vessel with the outdoor fill box. The fill hose, constructed with FDA compliant materials, is a pressure rated line that connects the brass fill fitting in the fill box to the fill valve on the vessel. The vent line is as important as any component in the system. It connects the safety relief valves on the vessel to either the outdoor fill box or an alternative outdoor vent tube.

NOTE: The vessel must always be connected to an outdoor vent line when it contains CO_2 and is indoors.

The Bulk CO_2 Supplier

The bulk CO_2 supplier is also an important part of the system. Most CO_2 suppliers not only provide timely delivery of CO_2 but also install and service the system.

For service, parts, information, emergency CO_2 delivery, or other CO_2 related assistance, contact the local Chart authorized CO_2 supplier. A place has been designated on page 17 of this manual to record the name and phone number of the CO_2 supplier and other important service contacts.

Operation Facts and Procedures

Operation Facts

1. The Mc Donald's Carbo-Max vessel's normal internal operating pressure (43) is between 140 psi and 165 psi.
2. Vessel pressure can be as high as 300 psi after a delivery but returns to its normal operating pressure after a day or two of normal CO_2 use.
3. The carbonator gas supply pressure (45) is normally between 90 psi and 115 psi.
4. The syrup gas supply pressure (44) is normally 65 psi.
5. Frost or condensation on the vessel is normal during periods of CO_2 use.
6. Frost or condensation on the vessel <u>before the start of daily CO_2 use</u> is a sign of a CO_2 leak. Have the leak fixed.
7. The Carbo-Max 450 holds 453 lb of CO_2 for a use rate of approximately 70 to 100 lb per week. The Carbo-Max 750 holds 771 lb of CO_2 for less frequent fills or a use rate of over 100 lb per week.
8. The contents gauge (22) displays the amount of liquid CO_2 in the vessel.
9. CO_2 becomes dry ice below a pressure of 61 psi. The shut-off circuit regulator (41) will close and stop CO_2 flow if the vessel pressure (43) reaches 70 psi or less.
10. An isolation (shut-off) valve is open when its handle is parallel to the valve body and the line. The valve is closed when its handle is perpendicular to the valve body and the line. During normal use, all isolation valves on the Carbo-Max vessel should be in the open position.
11. See the trouble-shooting section for additional information on potential vessel problems.

General Operating Procedures

1. Check for the following unusual symptoms every day before the start of operations and CO_2 use:
   - CO_2 leaks (See "**Safety**")
   - Pressure readings (43) & (46) & (48)
   - CO_2 contents (22)
   - Abnormal frost or condensation
2. **Always use caution when working with CO_2. Read and understand the "Safety" section of this manual.**
3. The CO_2 storage system does not require adjustment under normal operating conditions.
4. Check the vessel daily before using CO_2. See 'operation fact' number 10.
5. In an emergency the flow of CO_2 from or through the Carbo-Max can be stopped by closing the following valves:
   - Valves 33b or 33c to stop the flow of gas to the beverage or syrup system respectively; 33a and 33d to stop gas flow from the vessel.
   - Valve 30 to stop CO_2 flow or leakage through the fill hose and/or the brass fill fitting in the outdoor fill box.
   - Valve 33a to stop CO_2 flow through the "Economizer" circuit.
6. For CO_2 equipment issues, call your CO_2 supplier or service specialist. Before calling for service or trouble shooting assistance, please have the following information at hand:
   - Serial number of the vessel
   - Description of the problem
   - Readings from:
     the vessel contents gauge (22),
     the vessel pressure gauge (43) and
     the final line pressure gauges (46 & 48).
   - Observations such as unusual frosting and/ or events related to the problem.

McDonald's Beverage System Layout

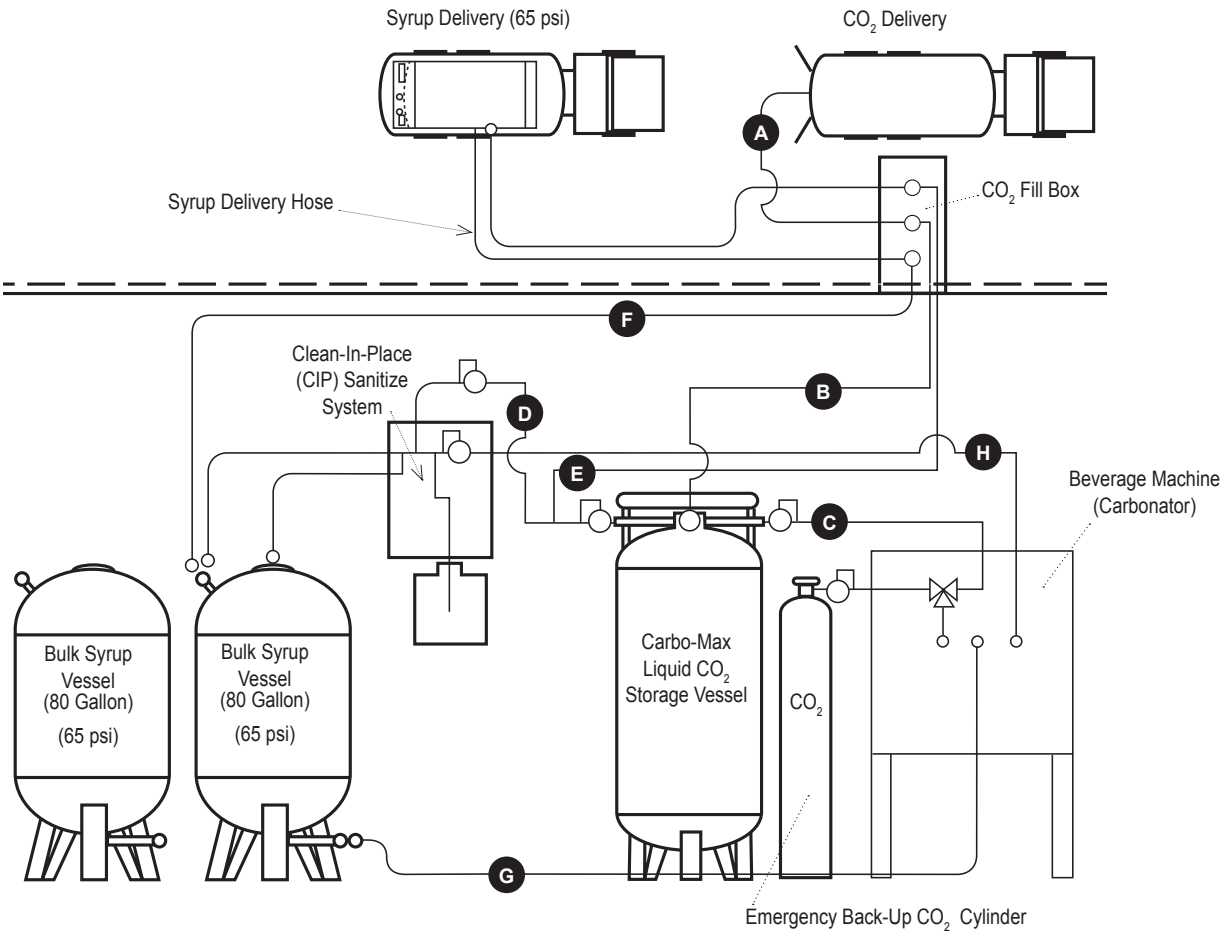

Item	Description	Function
A	CO_2 delivery truck fill line	Periodic transfer of liquid CO_2 to on-site storage vessel
B	In-Store CO_2 fill line	Transfer of CO_2 from outside fill-box to storage vessel
C	CO_2 gas-use line to beverage machine carbonator	CO_2 gas supply at 90 -110 psi for beverage carbonation
D	CO_2 gas-use line to bulk syrup and CIP	CO_2 gas supply at 65 psi to push syrup to beverage machine
E	CO_2 gas-use line to fill box 2-pin connection	CO_2 gas supply at 65 psi to pressurize bulk syrup delivery
F	Syrup delivery line	Bulk syrup delivery line routed through fill box conduit
G	Syrup supply tubing	Transfers syrup from bulk storage vessel to beverage machine
H	Water supply line	Supplies water to beverage machine and sanitation (CIP) system
44	Syrup Side Gas Use Regulator (65 psi)	Controls CO_2 pressure to bulk syrup
45	Beverage Side Gas Use Regulator (90-125 psi)	Controls CO_2 gas pressure to carbonator

Carbo-Max 750 / 450 Vessel Specifications

	Carbo-Max 750 (P/N 14275161)	Carbo-Max 450 (P/N 14275179)
Dimensions		
Diameter	26 in (66 cm)	20 in (50.8 cm)
Height	73.5 in (187 cm)	71.8 in (182.0 cm)
Empty Weight	430 lb (195 kg)	273 lb (124 kg)
Full Weight	1201 lb (545 kg)	726 lb (329 kg)
Net Volume	82 gal (310 liters)	48 gal (182 liters)
CO_2 Storage Capacity (saturated @125 psig [8.6 bar g])	771 lb (350 kg)	453 lb (205 kg)
Gas Use Connection	1/4" & 3/8" Hose Barb	1/4" & 3/8" Hose Barb
Fill Line Connection	5/8" Male 45^0 Flare	5/8" Male 45^0 Flare
Vent Line Connection	1/2" OD Tubing	1/2" OD Tubing
Rates and Pressures		
CO_2 Delivery Rate Continuous*	25 lb/hr (11.3 kg/hr) (approximately 1400 - 16 oz drinks / hr)	15 lb/hr (6.8 kg/hr) (approximately 850 - 16 oz drinks / hr)
Peak CO_2 Delivery Rate For One Hour*	15 lb/hr (6.8 kg/hr) (approximately 850 - 16 oz drinks / hr	15 lb/hr (6.8 kg/hr) (approximately 850 - 16 oz drinks / hr)
Evaporation Rate**	3.0 lb/day (1.4 kg/day)	2.5 lb/day (1.1 kg/day)
Max. Allowable Working Pressure (MAWP)	300 psig (20.7 bar g)	300 psig (20.7 bar g)
ASME Relief Setting	300 psig (20.7 bar g)	300 psig (20.7 bar g)
Additional. Relief Setting	450 psig (31.0 bar g)	450 psig (31.0 bar g)
Design Criteria	**Carbo-Max 750 & 450**	
Design Specifications	ASME Section VIII, Division 1	
Design Specifications	Meets with US and Canadian approvals	
Fill System	Single Line, pressure differential	
Internal Vaporizer Coil	Eight wraps for sustained high flow rate	
Insulation Type	Vacuum with Super Insulation	
Pressure Control	Economizer Circuit	
Liquid Level Gauge	Differential Pressure Conversion	
Outer Vessel Material	Stainless Steel	
Inner Vessel Material	Stainless Steel	
Floor mount Design (Meets NSF standards)	Six-Inch Permanent Legs	

* Based on 11.25 lb of CO_2 / 1000 16 oz. drinks
** No loss in normal applications

Vessel Parts Identification

McDONALD'S

Carbo-Max 750 P/N 14275161 **Carbo-Max 450 P/N 14275179**

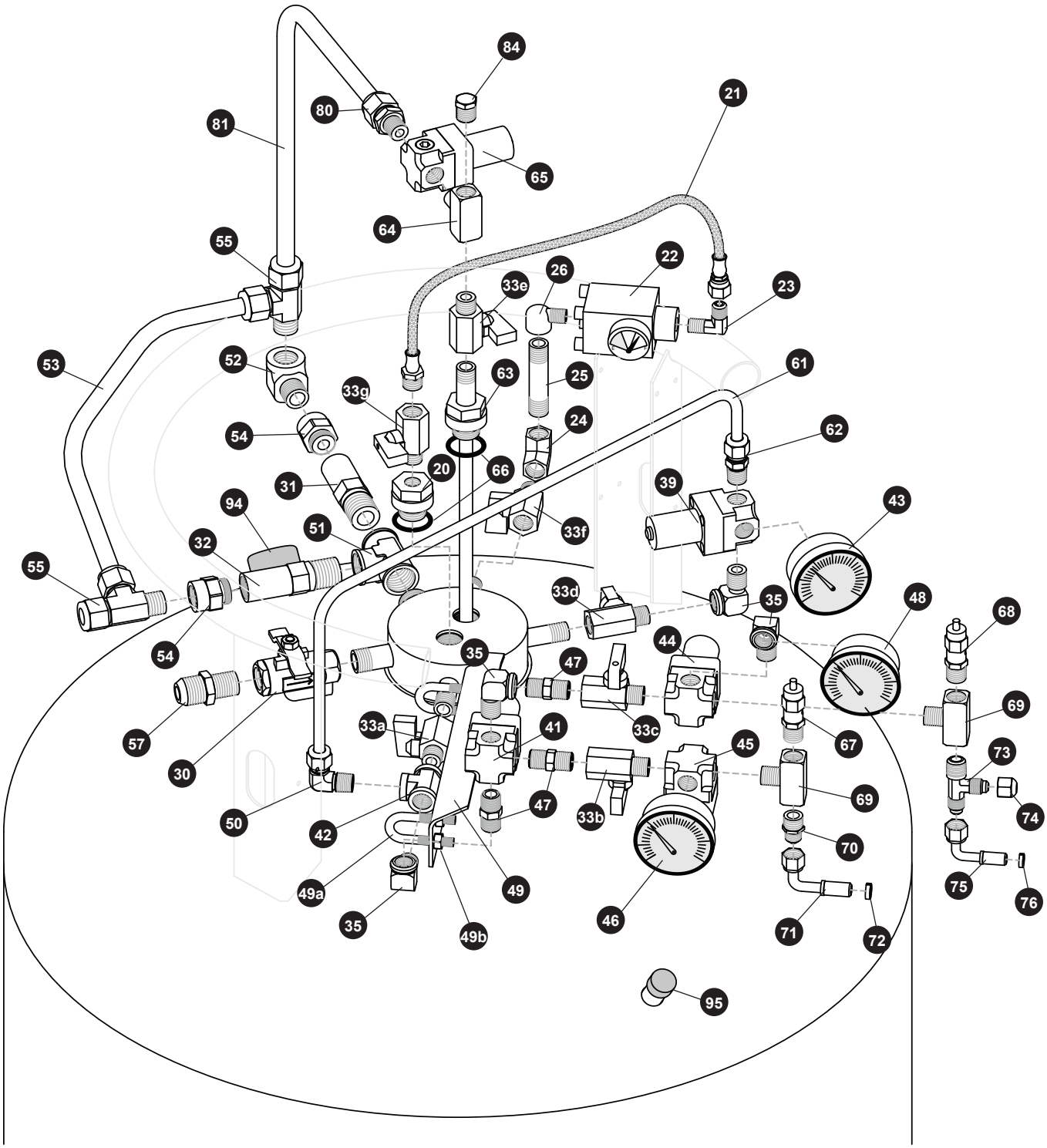

Vessel Parts

ITEM	PART NO.	DESCRIPTION	QTY	FUNCTION
20	14275363	Plug, Boss DP Low (w/o-ring) (3/4" - 16) (1/4" FPT)	1	"Low phase" isolation valve connection point.
66	13832957	O-Ring Only, (.924 ID x 1.130 OD)	1	Seals low phase DP gauge boss plug #20
21	14339161	Flex Hose, SS (1/4" MPT x 12" LG)	1	"Low phase" line for contents gauge
22	14346985	Diff. Pressure Gauge, Liquid Level / Contents	1	Indicates liquid CO_2 contents
23	14339136	Elbow, Brass, 90D (1/8" MPT x 1/8" MPT)	1	Joins "low phase" line to contents gauge
24	1210402	Elbow, Brass, 90D (1/4" FPT)	1	Joins "high phase" line to isolation valve
25	1310152	Nipple, Brass (1/4" x 2 1/2")	1	Component of high phase DP gauge line.
26	14285481	Elbow, Street, Reducer, Brass, 90D	1	Attaches high phase line to DP gauge.
30	11082128	Ball Valve (3/8" FPT)	1	Isolates CO_2 fill hose from vessel.
31	11708451	Relief Valve, 450 psig (1/2" MPT)	1	Secondary inner vessel safety relief valve
32	11708400	Relief Valve, 300 psig (1/2" MPT)	1	Primary inner vessel safety relief valve
33a	13282844	Ball Valve (1/4" MPT x 1/4" FPT)	1	Isolates gas-use side of Economizer regulator
33b	13282844	Ball Valve (1/4" MPT x 1/4" FPT)	1	On / off control for carbonator gas supply
33c	13282844	Ball Valve (1/4" MPT x 1/4" FPT)	1	On / off control for syrup gas supply
33d	13282844	Ball Valve (1/4" MPT x 1/4" FPT)	1	Isolates gas-side of Econ. reg. and main gas -use
33e	13282844	Ball Valve (1/4" MPT x 1/4" FPT)	1	On / off control for Sure-Fill vent
33f	13282844	Ball Valve (1/4" MPT x 1/4" FPT)	1	Contents gauge isolation valve / high phase
33g	13282844	Ball Valve (1/4" MPT x 1/4" FPT)	1	Contents gauge isolation valve / low phase
35	1210462	Street Elbow, Brass 90D (1/4" MPT)	4	Connects regulator and valve components
39	13154842	Regulator, Economizer, 150 psi (1/4" NPT)	1	Controls vessel pressure
-	13412514	Rebuild Kit For Economizer Regulator (#39)		
41	13154851	Regulator, Shut-Off. 70 psi, 1/4" NPT	1	Stops gas flow if line pressure drops to 70 psi
-	13412514	Rebuild Kit For Shut-Off Regulator (#41)		
42	13450730	Tee, Brass (1/4" FPT)	1	Connects Economizer and gas supply line
43	13321014	Pressure Gauge, 0-400 psi (1/4" MPT CBM)	1	Displays internal vessel pressure
44	13041186	Regulator, Syrup Side Gas Use, 65 psi (1/4" NPT)	1	Controls CO_2 pressure to bulk syrup
-	13412493	Rebuild Kit For Gas-Use Regulator (#44)		
45	14037779	Regulator, Final Line, 110 psi (1/4" NPT)	1	Controls CO_2 gas pressure to carbonator
-	13412493	Rebuild Kit For Final Line Regulator (#45)		
46	13321006	Pressure Gauge, 2" Dial, 0-160 psi (1/4" MPT CBM)	1	Indicates CO_2 gas pressure to use point
47	1310092	Nipple, Hex, Brass, 1/4" NPT	3	Joins components of gas-use plumbing.
48	2015169	Pressure Gauge, 2" Dial, 0-100 psi (1/4" CBM)	1	Indicates pressure to syrup side use point
49	14384199	Support Bracket (Kit) Complete w/U-bolts	1	Supports gas-use circuit components
49a	14429668	U-Bolt, SS (1/4" - 20) (1 1/4" x 3/4")	2	Component of support bracket kit
49b	2914071	Lock Nut, SS (1/4" - 20)	4	Component of support bracket kit
50	13834750	Elbow, SS, 90D (5/16" ODT x 1/4" MPT)	1	Joins Economizer and gas-use lines
51	13458820	Tee, Brass (1/2" FPT)	1	Manifolds primary & secondary relief valves
52	1210482	Elbow (90D 3/8" MPT)	1	Joins 450 psig relief valve to vent circuit
53	13799843	Tube, Relief Valve / Vent	1	Joins vent circuit components
54	13833731	Adapter, Pipe-Away (3/8" FPT)	2	Joins 450 & 350 psig relief valves to vent fittings
55	13832906	Tee, Brass Run (1/2" ODT x 3/8" MPT)	2	Joins 450 & 350 psi relief valves to vent circuit
57	1110112	Connector (5/8" ODT x 3/8" MPT 45° Flare)	1	Connects CO_2 fill hose to vessel

Vessel Parts

ITEM	PART NO.	DESCRIPTION	QTY	FUNCTION
61	13669731	Tubing, Stainless (5/16" OD)	1	Economizer plumbing line
62	13833757	Connector, SS (5/16" x 1/4" MPT)	1	Connects SS tubing to Economizer regulator
63	13081524	"450" Sure-Fill™ Tube Assembly (3/4"-16) (9.25") Includes O-Ring	1	Controls CO_2 filling and pressure venting
63	11764313	"750" Sure-Fill™ Tube Assembly (3/4"-16) (11") Includes O-Ring	1	Controls CO_2 filling and pressure venting
64	1213092	Tee, Brass (1/4" FPT x 1/4" FPT x 1/4" MPT)	1	Joins Sure-Fill assembly to S.F. regulator
65	13154834	Sure-Fill™ Regulator (1/4" FPT) 200 psi	1	Vents excess pressure during CO_2 filling
-	13412514	Rebuild Kit For Sure-Fill Regulator (#65)		
66	13832957	O-Ring, (.924 ID x 1.130 OD) [Included with Sure-Fill tube assembly]	1	Seals Sure-Fill tube assembly #63
80	13832914	Connector, Brass, 1/2 " ODT x 1/4 " MPT	1	Joins Sure-Fill regulator to vent line
81	14275419	Tube, Sure-Fill Vent	1	Sure-Fill vent line to vent circuit
84	1211102	Plug, Brass Hex Hd, 1/4" MPT	1	Plugs access port in tee
94	13118471	Cap, Black	1	Covers vacuum pump-out port
95	3911016	Cap, Blue	1	Covers vacuum regeneration port
	9722439	**INSTALLATION KIT, MCDONALD'S CO_2**		**INCLUDES PARTS FOR CO_2 INSTALLATION**
67	1812352	Relief Valve, 130 psi (1/4") (No Lever))	1	Prevents beverage system over-pressurization (Included in installation kit P/N 9722439)
68	1812342	Relief Valve, 75 psi (1/4") (No Lever)	1	Prevents bulk syrup vessel over-pressurization (Included in installation kit P/N 9722439)
69	1213092	Tee, Brass (1/4" F x 1/4" F x 1/4" MPT)	2	Connects gas use line to vessel (Included in installation kit P/N 9722439)
70	1111502	Union, brass (1/4" MPT x 1/4" Flare)	1	Connects carbonator gas-use line components (Included in installation kit P/N 9722439)
71	1611821	Elbow, SS (1/4" FL x 3/8" Hose)	1	Connects with carbonator gas-use line (Included in installation kit P/N 9722439)
72	3411331	Clamp, Stepless Ear For 3/8" ID Tubing	5	(Included in installation kit P/N 9722439)
73	1111512	Tee, Run, Brass (1/4" MPT)	1	Connection port for syrup delivery gas (Included in installation kit P/N 9722439)
74	1111292	Cap Nut (1/4" ODT 45D Flare)	1	Protects flare fitting (Item 73) (Included in installation kit P/N 9722439)
75	1611461	Elbow, SS (1/4" FL x 1/4" Hose)	1	Connects with syrup gas-use line (Included in installation kit P/N 9722439)
76	3411511	Clamp, Stepless Ear For 1/4" ID Tubing	6	Syrup gas-use connections (Included in installation kit P/N 9722439)
-	6511706	Quick Connect, Two Slot (1/4" Tube) (not pictured)	1	CO_2 line connector to bulk syrup vessel (Included in installation kit P/N 9722439)
-	2811606	Tubing, 1/4" ID Red Line, 20 ft. (not pictured)	1	Syrup gas-use line (Included in installation kit P/N 9722439)
-	3411321	Clamp, Stepless Ear For 1/4" ID (not pictured)	4	(Included in installation kit P/N 9722439)
-	2811586	Tubing, 3/8" ID Red Line, 100 ft. (not pictured)	1	Carbonator gas line (Included in installation kit P/N 9722439)
-	2811616	Tubing, 1/4" ID Green Line, 5 ft. (not pictured)	1	(Included in installation kit P/N 9722439)
-	14505691	Kit, Label, Carbo-Max / McDonald's	1	15-label set
-	10807553	Label, UN2187, Warning Liquid CO_2	1	Included in kit P/N 14505691
-	11784496	Label Only, Caution Carbon Dioxide	1	(MAWP 300 psi)
-	11197611	Label Kit, NYCFD Approval, (Stationary Installation)	1	Approval #4912 for New York City Installations
-	11197646	Label Kit, NYCFD Approval, (Portable Installation)	1	Approval #4912 for New York City Installations

Fill Box Parts & Hose Identification

Surface Mount Fill Box (P/N 9722329)

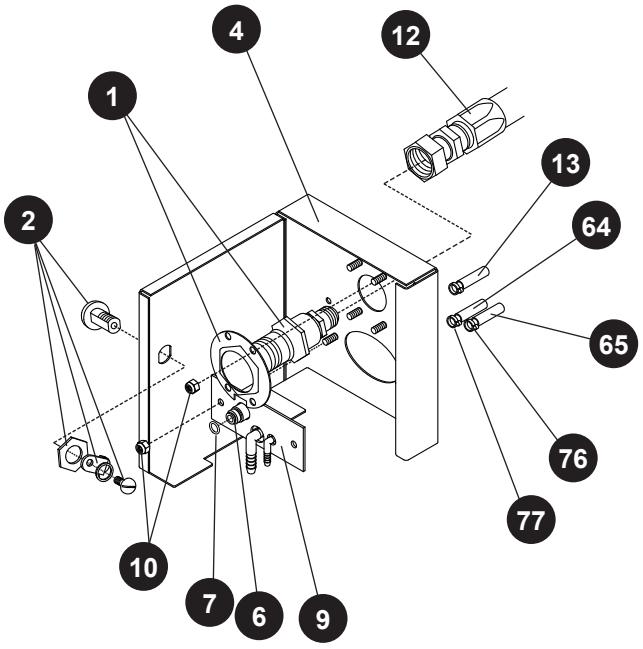

Flush Mount Fill Box Shell (Without Panel) (P/N 8512629)
Flush Mount Fill Panel (With Fttings) (P/N 9722859)

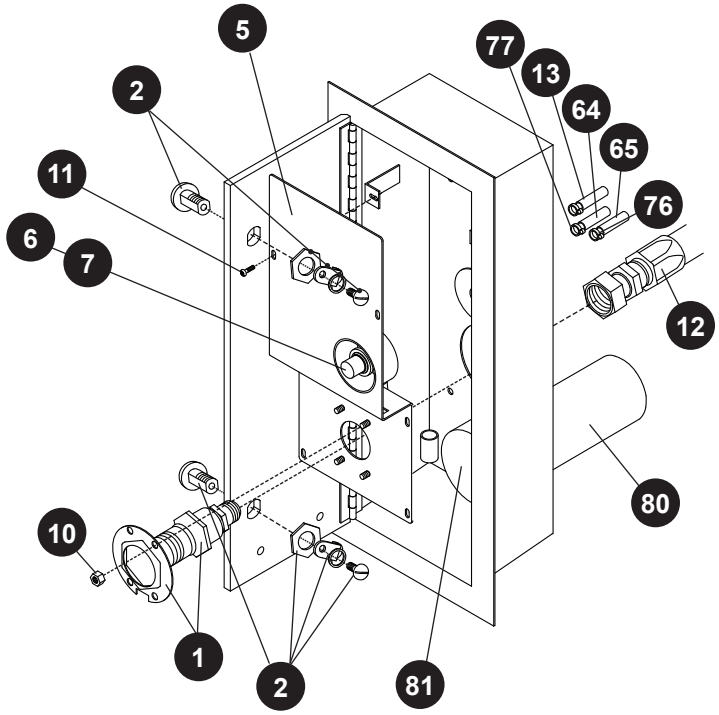

ITEM	PART NO.	DESCRIPTION	QTY.	FUNCTION
1	11381021	CO_2 Fill Fitting, Brass (includes retainer ring)	1	Connection for CO_2 delivery vessel hose
2	13078181	Lock Assembly (includes key)	1	Locks fill box door
-	13104087	Key for Lock Assembly (not pictured)	-	Replacement key for fill box
4	12943786	Surface-Mount CO_2 Fill Box (without fittings)	1	Allows outdoor filling and venting of vessel
5	8517839	Flush-Mount Fill Box Panel (without fittings)	1	Holds brass fill fitting and 2-pin connector
6	6511631	Quick Connect, 2-Pin	1	CO_2 connection for syrup delivery
-	4710619	O-Ring on boss adapter (not shown)	1	Seals 2-pin connection to boss adapter
7	10526989	Outside O-Ring (5/16” x 1/2”)	1	Seals 2-pin connection for syrup delivery gas
9	12943866	Fill / Vent Connection Plate / W/O 2-Pin Qk. Conn.	1	Removable plate for service to tubing connections
10	2914071	Locknut, SS (10 x 32) with nylon insert	-	Secures fill fitting retainer and connection plate
11	2913981	Screws, SS (#8 x 1/2”)	6	Secures fill panel to fill box
-	10973324	CO_2 Fill and Vent Hose Kit (15 ft. each line)	1	(Included in installation kit P/N 9722439)
12	10802947	CO_2 Fill Hose Only, 15 ft. (2000 psi & FDA)	1	Transfers liquid CO_2 from fill box into vessel
13	2811726	Vent Hose Only, 15 ft	1	Vents excess vessel pressure outdoors
64	2811606	Tubing, red line (1/4” ID)	20 ft	(Included in installation kit P/N 9722439)
65	2811616	Tubing, green line (1/4” ID)	5 ft	(Included in installation kit P/N 9722439)
76	3411511	Clamp, Stepless (for 1/4” ID green line tube)	6	(Included in installation kit P/N 9722439)
77	3411321	Clamp, Stepless (for 1/4” ID red line tube)	4	(Included in installation kit P/N 9722439)
80	8503796	Conduit, Syrup Pass-Thru	1	(Included in installation kit P/N 9722439)
81	10772160	Pipe Cap 2-1/2” PVC	1	Syrup pass-thru cover (Included with P/N 8512629)
-	11784496	Label, Caution Carbon Dioxide	1	
-	10789851	Decal, McDonald’s Fill Box	1	

Troubleshooting

CO_2 Storage Vessel

INDICATION	POSSIBLE CAUSE	CORRECTIVE ACTION
No CO_2 to carbonator or syrup systems. OR Carbonated drinks are flat.	CO_2 storage vessel is empty.	1. Switch to emergency CO_2 gas cylinder. 2. Call CO_2 supplier for delivery.
	Isolation valves (33a, b, c, d) closed.	Open valve or valves as needed.
	Vessel pressure (43) is low (110 psi or less).	Check for leak in gas supply lines, beverage system, vessel plumbing, vessel safety system and/or fill box. (Frost should not be present on vessel after extended periods of no CO_2 use.)
	Economizer regulator (42) not operating properly; set too low or stuck open.	Check Economizer circuit by closing isolation valve (33c) and switching to emergency CO_2 gas cylinder. If pressure increases after 24 hrs., the Economizer regulator may need to be replaced. If tank pressure fails to rise, refer to section below on "constant low vessel pressure" and call CO_2 service agent.
	Unknown	Call CO_2 service agent.
Constant low vessel pressure. (gauge 43 below 140 psi)	Economizer regulator (39) set low or stuck open.	Call CO_2 service agent.
	CO_2 leak from vessel plumbing, CO_2 fill box and/or vessel safety system	1. See "Safety." Evacuate & ventilate the room. 2. Call CO_2 service agent.
	Sure-Fill assembly leaking or malfunctioning.	Close Sure-Fill valve (33d); call CO_2 service agent
Frost on the bottom or sides or top of the vessel.	A normal condition during or following CO_2 use.	None
	Leak in beverage system and/or gas supply lines or CO_2 fill box. (When frost is present after extended periods of no CO_2 use.)	1. See "Safety." Evacuate & ventilate room. Check for frost in the morning before CO_2 has been used. If possible, locate and correct leak. 2. Call appropriate equipment service agent.
Frost on vessel after extended periods with no CO_2 use (such as in the morning before store operations begin.)	CO_2 leak from the beverage or syrup system (rupture disc), plumbing, or CO_2 fill box.	1. See "Safety." Evacuate & ventilate the room. 2. Call appropriate service agent.

CO_2 Storage Vessel

INDICATION	POSSIBLE CAUSE	CORRECTIVE ACTION
Constant high vessel pressure. (43 over 200 psi)	Normal condition for a few days following a CO_2 delivery.	None
	Normal when little or no CO_2 is used.	None
	Economizer regulator (42) closed or set too high.	Call CO_2 service agent.
	Vessel has a weak vacuum.	Call CO_2 service agent.
High CO_2 consumption.	Increased beverage sales or CO_2 use.	None
	Vessel pressure (43) constantly high.	See section on vessel pressure too high.
	CO_2 leak from vessel plumbing, CO_2 fill box, gas lines, and/or beverage or syrup use-point equipment.	1. See "**Safety**." Evacuate & ventilate room. 2. Locate & correct leak if possible 3. Call appropriate service agent.
	Error in CO_2 supplier invoice.	Check CO_2 usage history / pattern against supplier invoices. Consult CO_2 supplier.
CO_2 vessel will not fill.	CO_2 vessel is already full.	None
	Fill valve (30) is shut off or is faulty.	Consult CO_2 service agent / open fill valve
	Sure-Fill™ valve is closed	Consult CO_2 service agent / open Sure Fill valve
	Brass fill fitting in CO_2 fill box and/or on truck's delivery hose is faulty.	1. Consult with CO_2 supplier or service agent. 2. Have brass fill fitting(s) replaced if needed.
	Differential between store vessel pressure and delivery pressure is too small.	1. Verify delivery vessel pressure is at least 50 psi higher than the store vessel pressure (43) and store vessel pressure is between. 2. Vent store vessel to lower pressure if needed. 3. **Never** vent store vessel pressure to lower than 125 psi.
	Delivery vessel is empty.	Consult supplier. Arrange for another delivery.
	Delivery vessel empty or truck delivery hose is obstructed, e.g. vehicle stopped on hose or hose is bent.	Ask driver to make another delivery or clear obstruction or wait until obstruction clears.

Troubleshooting

CO_2 Storage Vessel

INDICATION	POSSIBLE CAUSE	CORRECTIVE ACTION
Hissing sounds or evidence of gas leak.	Normal for short periods of time from some regulators and relief valves.	Observe leak, if it is not large and does not last long and occur frequently, no action is needed.
	Large leaks from elsewhere in the system, sustained leaks, or frequent leaks are **not** normal.	1. See "**Safety**". 2. Evacuate all personnel from affected areas. 3. Ventilate the area. 4. Call CO_2 service agent.
Final line / gas use pressure gauges indicate less than 65 psi on the syrup side and/or less than 100 psi on the carbonator side.	Final line regulators (44) or (45) intentionally set lower by beverage service agent.	None
	Final line regulators (44) or (45) not operating in proper pressure range.	Call CO_2 service agent.
	Final line pressure gauge (46 or 48) damaged or faulty.	Call CO_2 service agent.
	One or more of the causes listed in "no CO_2" or "flat drinks" problem section.	1. See indication sections regarding "no CO_2", "flat drinks" etc. 2. Call CO_2 service agent.

Fill Box

INDICATION	POSSIBLE CAUSE	CORRECTIVE ACTION
Fill box door will not close, lock, or open.	Wrong key.	1. Verify correct key and retry. 2. Contact CO_2 supplier for spare key. 3. Order new key.
	Lock dirty or damaged.	1. Clean and oil lock 2. Replace lock if necessary
Brass fill fitting in fill box leaking or hissing.	Particle of ice or debris caught in fill fitting poppet.	1. If driver is still on site, reconnect CO_2 delivery hose and then disconnect. 2. If driver is not available, carefully press poppet with dull instrument to re seat poppet. 3. If leak continues after line warms, close the fill isolation valve (30) and call service agent.
	Fitting is defective or sealing surface is worn due to normal wear.	Close the fill isolation valve (30) on the vessel and call service agent to replace fitting.
Threads on brass fill fitting are worn or stripped.	Normal wear. Fill fitting must be replaced.	Contact CO_2 service agent to replace fitting.
	Fill fitting cross threaded with the CO_2 delivery hose coupler	Contact CO_2 service agent to replace fitting.
CO_2 is venting from fill box.	Normal during CO_2 delivery.	None
	Normal for short periods of time if vessel pressure is at or over 300 psi	1. NONE if for short period(s) of time 2. If vessel pressure consistently over 300 psi, see section on vessel pressure too high.
	Fill fitting is not sealing properly.	Call CO_2 service agent to replace fitting.

Service and Parts

Service and Maintenance

1. Service or maintenance work on the Carbo-Max CO_2 storage system should be performed only by Chart trained and authorized professional service agents who are familiar with CO_2, bulk liquid CO_2 pressure vessels, and all pertinent safety and service procedures. Chart recommends the use of Chart approved replacement parts. Contact Chart for the name of the authorized service agent(s) in your area.

2. Before calling for service or troubleshooting assistance, please have the following information at hand:
   - Serial number of the vessel
   - Description of the problem
   - Readings from:
     - the contents gauge (22),
     - the vessel pressure gauge (43),
     - the final line pressure gauges (44 & 46).
   - Any special observations (for example: unusual frosting or events related to the problem)

3. Chart recommends that a qualified professional service agent perform a thorough preventative maintenance check on the system at least once every two years.
   The check should be done to ensure safety and optimal system performance.
4. The Carbo-Mizer bulk CO_2 storage system has no user serviceable parts. An authorized professional service agent should perform all service work.

   NOTE: Any attempt by an unauthorized person to service or perform unauthorized modifications on the equipment will void the warranty.

Ordering Parts Or Service

For service contact your local authorized MVE Beverage Systems CO_2 supplier or equipment service agent. For parts contact your local authorized Chart service agent or order on-line directly from Chart at **www.chartparts.com**. Know the model and serial number of the vessel for which you are ordering parts. To assure that your order is processed promptly, list each item separately, being careful to specify the quantity, the part number, and the description of each item being ordered.

Important Telephone Numbers

Company	Contact Person	Phone Number
CO_2 Supplier	_____	_____
	After-Hours / Emergency Number	_____
CO_2 Service Agent	_____	_____
CO_2 Equipment Installer	_____	_____

MVE Beverage Systems Customer Service (952) 758-4484 or (800) 247-4446 {toll free in US}

MVE Beverage Systems Technical Service (952) 758-4484 or (800) 253-1769 {toll free in US}

System Flow Schematic

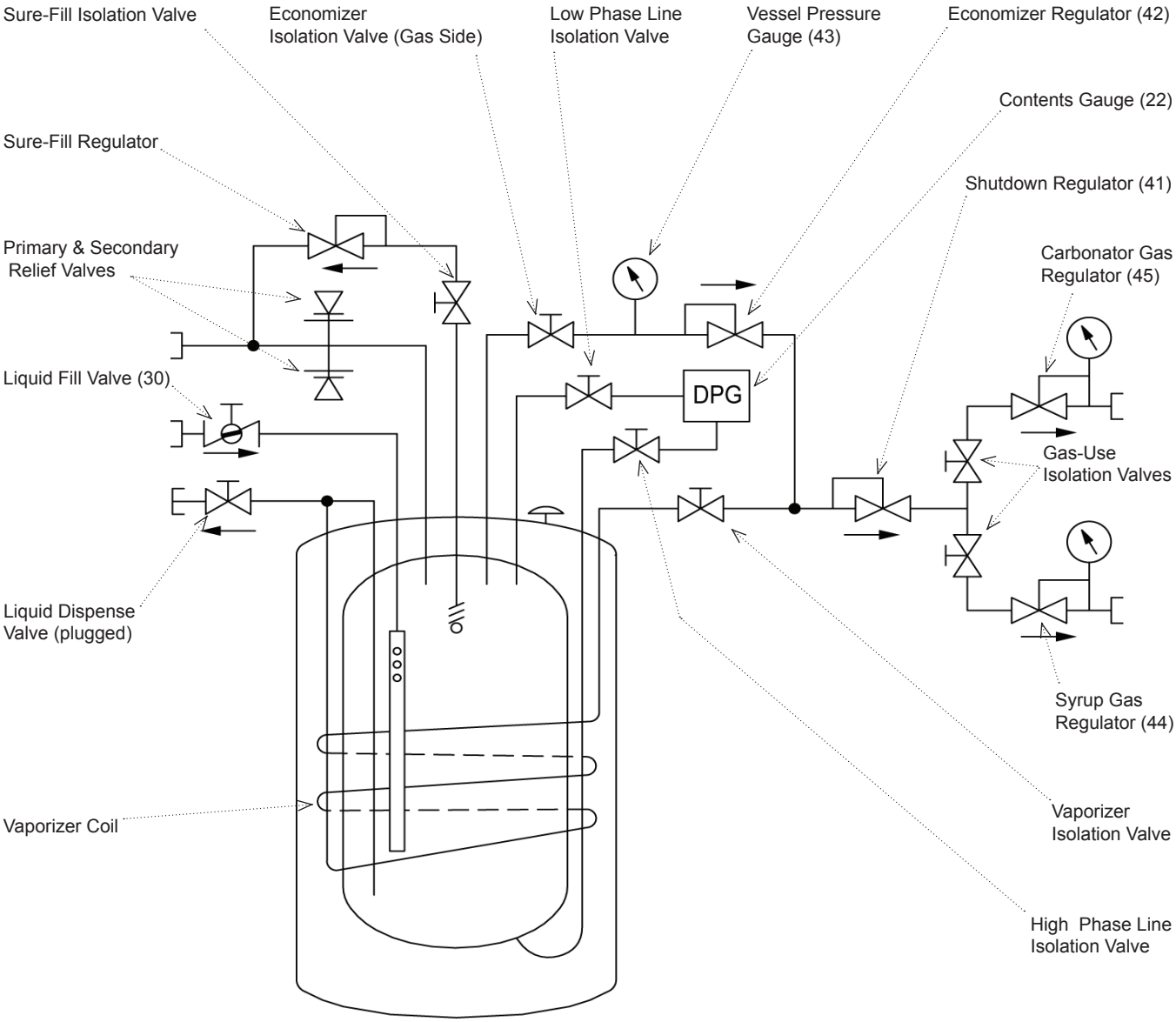

McDonald's Carbo-Max 450 & 750 CO_2 System

chartparts.com

- Order parts directly from Chart through a personalized account at **www.chartparts.com**.
- Simply establish an account password and "log-in."
- Service is available 24 hours a day and provides same-day shipping on all stock parts.
- Chartparts provides access to shipment tracking, transaction history, and personalized account information for convenient account management.

Chart Inc.
407 7th Street N.W.
New Prague, MN 56071-1000

CHART®

chartbeverage.com

PART NUMBER 14347902 January 2010

U.S. 800-247-4446 • Worldwide 952-758-8275 • Fax 952-758-8275 • www.chart-ind.com • e-mail: beverage@chart-ind.com