Distributed Power System
SA500 DC Bus Supply

615055-2R (50 Amp)
615055-2T (50 Amp)
615055-2S (100 Amp)
615055-2V (100 Amp)

Instruction Manual S-3017-1

Rockwell Automation

Throughout this manual, the following notes are used to alert you to safety considerations:

ATTENTION: Identifies information about practices or circumstances that can lead to personal injury or death, property damage, or economic loss.

Important: Identifies information that is critical for successful application and understanding of the product.

The thick black bar shown on the left margin of this paragraph will be used throughout this manual to signify new or revised text or figures.

ATTENTION: Only qualified personnel familiar with the construction and operation of this equipment and the hazards involved should install, adjust, operate, or service this equipment. Read and understand this manual and other applicable manuals in their entirety before proceeding. Failure to observe this precaution could result in severe bodily injury or loss of life.

ATTENTION: DC bus capacitors retain hazardous voltages after input power has been disconnected. After disconnecting input power from the DC bus supply, wait five (5) minutes and then measure the voltage at the POS and NEG terminals of the DC bus supply and each Power Module to ensure the DC bus capacitors are discharged before touching any internal components. Failure to observe this precaution could result in severe bodily injury or loss of life.

ATTENTION: The user is responsible for conforming with all applicable local, national, and international codes. Failure to observe this precaution could result in damage to, or destruction of, the equipment.

The information in this user's manual is subject to change without notice.

AutoMax™ is a trademark of Rockwell Automation.
©1998 Rockwell International Corporation

CONTENTS

Chapter 1 **Introduction**
1.1 Related Publications 1-2
1.2 Related Hardware 1-2

Chapter 2 **Mechanical/Electrical Description**
2.1 Mechanical Description 2-1
2.1.1 LED Indicators 2-2
2.1.2 Interface Connector (TB1) 2-2
2.2 Electrical Description 2-3

Chapter 3 **Installation Guidelines**
3.1 Selecting a DC Bus Supply 3-2
3.2 Selecting an External Braking Resistor 3-3
3.3 Wiring 3-4
3.4 Grounding 3-4
3.5 DC Bus Supply Initial Installation 3-5
3.6 Replacing the DC Bus Supply 3-10

Chapter 4 **Diagnostics and Troubleshooting**
4.1 DC Bus Supply Faults 4-1
4.1.1 The PHASE LOSS LED Is On 4-1
4.1.2 The OVERTEMP LED Is On 4-1
4.1.3 The PSM READY LED Is Off 4-2
4.2 DC Bus Braking Fuse Is Blown 4-2

Appendix A Technical Specifications A-1

Appendix B Block Diagram B-1

Appendix C Motor Current Specifications C-1

Appendix D Compliance with Electromagnetic Compatibility Standards D-1

Index Index-1

List of Figures

Figure 2.1 – SA500 DC Bus Supply Faceplate..... 2-1
Figure 2.2 – Circuitry of Terminals 1 and 2 of Interface Connector TB1 2-3

Figure 3.1 – SA500 DC Bus Supply Mounting Dimensions..... 3-6
Figure 3.2 – Jumper W1 3-7
Figure 3.3 – SA500 DC Bus Supply Wiring 3-8

Figure 4.1 – DC Bus Braking Fuse 4-3

List of Tables

Table 1.1 – SA500 DC Bus Supplies 1-1
Table 1.2 – SA500 Documentation (Binder S-3002) 1-2

Table 2.1 – Faceplate LED Indicators 2-2

Table 3.1 – SA500 DC Bus Supply Motoring Current
and Internal Power Dissipation Specifications 3-2
Table 3.2 – Typical Braking Resistor Continuous Duty Power Dissipation 3-4
Table 3.3 – Short Circuit Protection 3-9
Table 3.4 – Minimum/Maximum Input Wire Sizes 3-9
Table 3.5 – Internal Braking Resistor Specifications 3-9

CHAPTER 1

Introduction

Distributed Power System (DPS) SA500 DC Bus Supplies rectify three-phase AC input voltage and provide constant DC voltage to the SA500 AC Power Modules. The DC bus supplies also contain circuits that permit regeneration from the SA500 AC Power Modules during motor deceleration or overhauling.

The main circuit, which supplies motoring current, consists of a full-wave bridge made from three SCRs in the upper legs and three diodes in the lower legs. The SCRs are gradually phased on to provide pre-charging and are fully turned on during normal operation.

The regenerative circuit consists of a transistor and a resistor in series across the DC bus. It is switched on when the bus voltage is higher than the AC line feeding the bridge and turned off when the bus voltage has dropped to an acceptable level.

The DC bus supplies require no programming or user tuning. These are self-contained units that provide full regulation and diagnostic capabilities.

The four DC bus supply models are listed in table 1.1.

Table 1.1 – SA500 DC Bus Supplies

Model Number	Output Amps (DC)	Description
615055-2R	50 A	DC Bus Supply with internal braking resistor
615055-2T	50 A	DC Bus Supply with user-supplied, external braking resistor(s)
615055-2S	100 A	DC Bus Supply with internal braking resistor(s)
615055-2V	100 A	DC Bus Supply with internal braking resistor(s)

Input power for the bus supplies may be either isolated or non-isolated three-phase 230 VAC. Output power from the bus supplies is nominally 325 VDC with 230 VAC input power. A single Bus Supply can power up to six SA500 AC Power Modules. Refer to section 3.1 for more information on selecting a bus supply.

Note that throughout this manual references to a “bus supply” apply to all four bus supplies unless stated otherwise.

1.1 Related Publications

This instruction manual provides a description of the SA500 DC bus supply hardware. Installation and troubleshooting guidelines are also provided. Note that this instruction manual does not describe specific applications of the standard hardware or software.

For more information, refer to the instruction manuals contained in the SA500 drive binder, S-3002, as listed in table 1.2. It is assumed that the user is familiar with the manuals in S-3002 before installing, operating, or performing maintenance upon this equipment. Refer to these instruction manuals as needed.

Table 1.2 – SA500 Documentation (Binder S-3002)

Document	Document Part Number
DPS Overview	S-3005
Universal Drive Controller Module	S-3007
Fiber Optic Cabling	S-3009
SA500 DC Bus Supply	S-3017
SA500 AC Power Modules	S-3018
SA500 Diagnostics, Troubleshooting, & Start-Up Guidelines	S-3022
SA500 Information Guide	S-3024
SA500 Drive Configuration & Programming	S-3044

Additional information about using the SA500 Bus Supply is found in the instruction manuals, prints, and other documents shipped with each drive system. Always consult the prints shipped with the drive system for specific mounting and connecting information about your drive.

1.2 Related Hardware

Bus connection wires are normally provided with engineered drive systems. These wires connect the DC Bus Supplies to the SA500 AC Power Modules and are required for proper operation. Substitute cables should not be used.

CHAPTER 2

Mechanical/Electrical Description

This chapter describes the DC bus supply's faceplate and internal electronics.

2.1 Mechanical Description

The DC bus supply consists of a phase-controlled SCR bridge, a DC bus regulator, DC bus capacitors, and cooling fan(s). The components are housed in a sheet metal enclosure.

The regulator circuit board assembly contains the LEDs and interface connector (TB1) which are visible on the bus supply's faceplate. On-board SCR and pre-charge circuitry generate the DC bus voltage. On bus supply models 615055-2R and 615055-2S, the braking resistor(s) used to control the DC bus voltage during regeneration are included. On bus supply models 615055-2T and 615055-2V, the braking resistors must be added externally.

The faceplate cover of the DC bus supply is shown in figure 2.1. The cover is attached to the DC bus supply's chassis by the two square 1/4-turn fasteners shown.

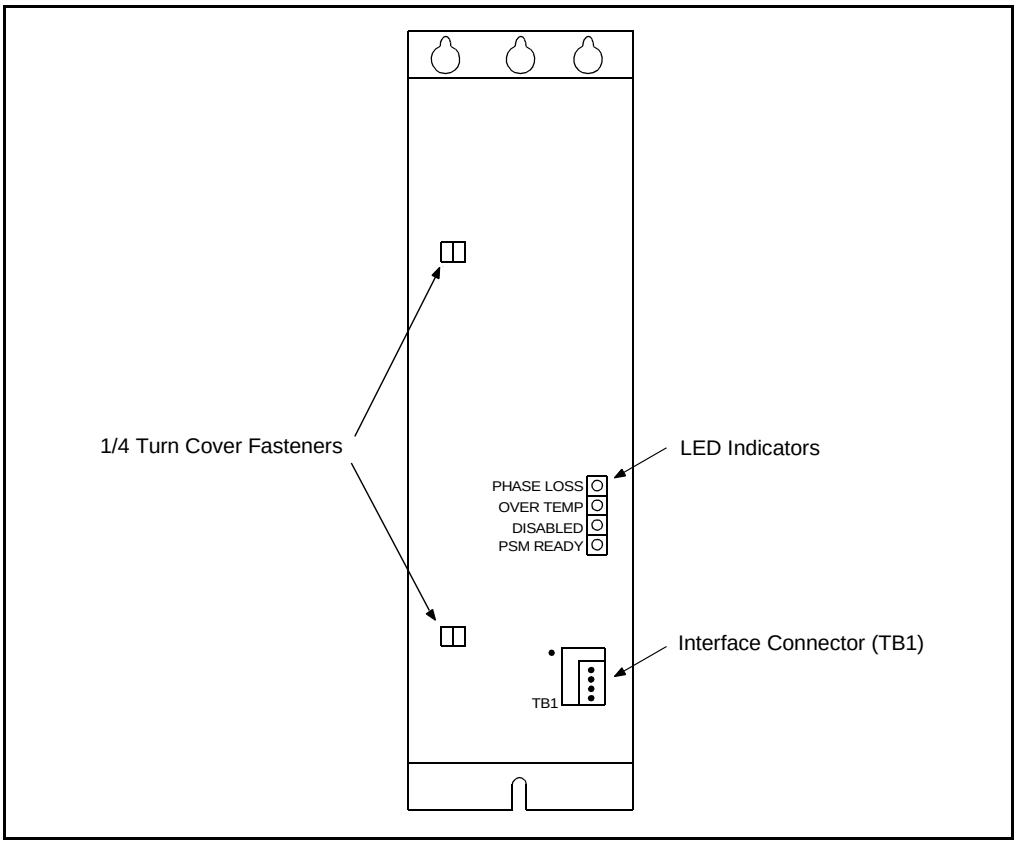

Figure 2.1 – SA500 DC Bus Supply Faceplate

2.1.1 LED Indicators

The four LEDs visible through the faceplate provide diagnostics information about the DC bus supply. See table 2.1.

Table 2.1 – Faceplate LED Indicators

LED Name	LED Color	Description
PHASE LOSS	Red	Off: OK (normal) ON: Loss of one phase or more of the incoming AC power
OVERTEMP	Red	Off: OK (normal) ON: The bus supply has overheated
DISABLED	Red	Off: The bus supply has AC input power applied and is enabled (normal) ON: DC bus supply is disabled (check jumper W1, see section 2.1.1)
PSM READY	Green	Off: No DC bus voltage ON: DC bus voltage is present (normal)

2.1.2 Interface Connector (TB1)

Terminals 1 and 2 or interface connector TB1 are used to indicate an overtemperature fault detected by the internal protective circuitry of the DC bus supply. See figure 2.2. The following signals are present on the terminals.

- Terminal 1: – status signal
- Terminal 2: + status signal

Together these terminals provide an output signal from a normally-open relay rated 24 VDC @ 0.4A, resistive load, 25° C (77° F). This signal can be monitored in an AutoMax rack through a 24V DC input module.

- When the bus supply is not powered up, the relay's contacts are open.
- When the bus supply is powered up and no overtemperature fault exists, the relay's contacts are closed.
- When the bus supply is powered up and an overtemperature fault does exist, the relay's contacts are open.

ATTENTION: DC bus capacitors retain hazardous voltages after input power has been disconnected. After disconnecting input power from the DC bus supply, wait five (5) minutes and then measure the voltage at the POS and NEG terminals of the DC bus supply and each Power Module to ensure the DC bus capacitors are discharged before touching any internal components. Failure to observe this precaution could result in severe bodily injury or loss of life.

If an overtemperature fault exists, the pre-charge is disabled. However, it is possible the DC bus capacitors may not discharge due to a component failure. The user should disconnect AC input power and verify that the DC bus capacitors are discharged before touching any internal components. See section 3.6.

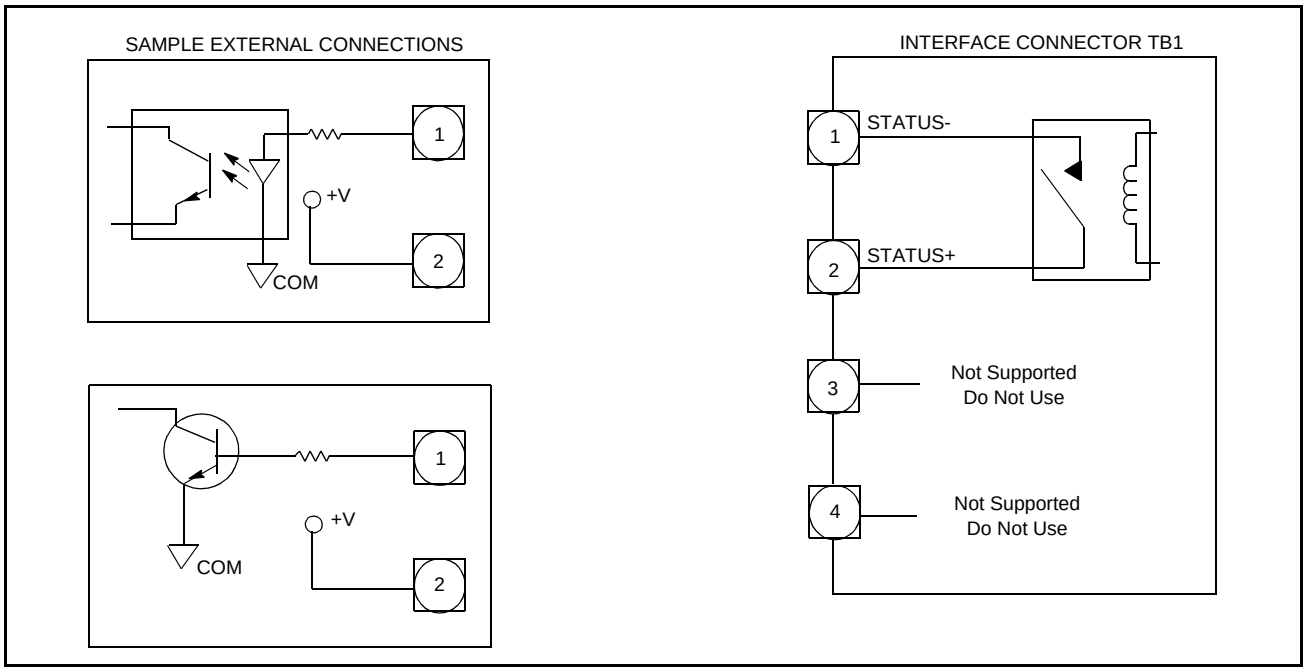

Figure 2.2 – Circuitry of Terminals 1 and 2 of Interface Connector TB1

Terminals 3 and 4 of interface connector TB1 are not supported at this time and must not be used.

Note that jumper W1, which is visible only when the cover is removed, must be set to position B (factory setting) for the bus supply to operate correctly. See figure 3.2 in chapter 3. With the jumper in position B, the bus supply will be on (enabled) whenever the correct three-phase AC input voltage is present.

2.2 Electrical Description

The bus supply rectifies the incoming 230 VAC and charges the DC bus capacitors using “soft charge” circuitry to reduce the inrush currents. Braking transistor circuitry is included to automatically connect a braking resistor across the DC bus whenever the motor load is regenerative and the DC bus voltage rises above the threshold level (1.47 x RMS line voltage + 5V).

Bus supply models 615055-2R and 615055-2S have internal braking resistors. Bus supply models 615055-2T and 615055-2V require external, user-supplied braking resistors. Refer to section 3.2 for more information on selecting braking resistors.

CHAPTER 3

Installation Guidelines

This chapter provides guidelines for installing and replacing the SA500 DC bus supply. Instructions are included describing how to select a bus supply based on the bus supply's current rating and the combined current draw of the motors attached to the bus supply through the SA500 AC Power Modules. For those installations where greater regenerative power dissipation requires the use of a bus supply with external braking resistors, a procedure is provided to assist in the selection of the proper braking resistors. Refer to the wiring diagrams supplied with your system for specific installation information.

ATTENTION: Only qualified personnel familiar with the construction and operation of this equipment and the hazards involved should install, adjust, operate, or service this equipment. Read and understand this manual and other applicable manuals in their entirety before proceeding. Failure to observe this precaution could result in severe bodily injury or loss of life.

ATTENTION: DC bus capacitors retain hazardous voltages after input power has been disconnected. After disconnecting input power from the DC bus supply, wait five (5) minutes and then measure the voltage at the POS and NEG terminals of the DC bus supply and each Power Module to ensure the DC bus capacitors are discharged before touching any internal components. Failure to observe this precaution could result in severe bodily injury or loss of life.

ATTENTION: Ungrounded equipment presents a shock hazard. If your drive cabinet is mounted such that the cabinet is not grounded, a ground wire must be connected to the cabinet for personnel safety. Failure to observe this precaution could result in severe bodily injury or loss of life.

ATTENTION: The user is responsible for conforming with all applicable local, national, and international codes. Failure to observe this precaution could result in damage to, or destruction of, the equipment.

ATTENTION: Equipment must be connected to a power source for which it was designed. Verify that the available input is 230 VAC. Failure to observe this precaution could result in damage to, or destruction of, the equipment.

3.1 Selecting a DC Bus Supply

The number of SA500 AC Power Modules that a single DC bus supply can power depends upon the bus supply's current rating and the combined current draw of the attached motors.

Use the following procedure to select a bus supply based on motor current values. Refer to Appendix C for motor current information on Industrial Brushless, Brushless Servo, and Induction motors.

Step 1. Add together the continuous Idc currents of all the motors to be powered from the bus supply. See Appendix C.

Step 2. If all of the motors can accelerate, decelerate, or overhaul (draw maximum current) at the same time, add together the maximum Idc currents of the motors. See Appendix C.

If only some of the motors can accelerate, decelerate, or overhaul at the same time, add their maximum Idc currents to the continuous Idc currents of the other motors to obtain a total maximum Idc current.

Step 3. Select the DC bus supply based on both Idc continuous current and Idc maximum current. See table 3.1 for bus supply ratings.

Note that regardless of the total current drawn by the motors, the maximum number of SA500 AC Power Modules that can be powered from a single DC bus supply is six.

If the motors are to be operated in the regenerative mode, the applications's regenerative power dissipation requirements should be evaluated. The power dissipation capabilities of the bus supplies with internal braking resistors are shown in table 3.1. Refer to table 3.5 for the resistance values of the internal braking resistor(s).

Table 3.1 – SA500 DC Bus Supply Motoring Current and Internal Power Dissipation Specifications

DC Bus Supply	Output Rating Continuous Current (Idc) RMS	Output Rating Maximum Current (Idc) RMS[1]	Internal Braking Resistor Maximum Power Dissipation		Turn-On Voltage[4]
			Continuous[2]	0.5 Second[3] Overload	
615055-2R	50A	150A	414W[5]	1568W[5]	343V
615055-2S					
615055-2T	100A	450A	1200W[6]	4624W[6]	343V
615055-2V					

1. 10 second overload
2. Maximum continuous braking power = (continuous fuse current)^2 x R, where continuous fuse current = 0.9 x fuse rating.
3. Maximum 0.5 second overload braking power = (maximum fuse current)^2 x R, where maximum fuse current = 2 second fuse melting current.
4. V_{LL} x 1.47 + 5 volts, where V_{LL} is 230V_{AC} nominal.
5. Snubber Fuse Limited
6. Resistor Limited

If the application's requirements exceed these values, refer to section 3.2 for information on selecting external braking resistors.

3.2 Selecting an External Braking Resistor

DC bus supplies with external braking resistors (615055-2T or 615055-2V) allow for greater power dissipation during motor regeneration. Perform the following steps to determine the required external braking resistor specifications.

Step 1. Using the stopping time specifications, calculate the required braking torque:

Torque	**=**	**J**	**x**	**Alpha**
(lb-ft)	=	(lb-ft-sec^2)	x	(radians/second^2)
(N-m)	=	(kg-meter^2)	x	(radians/second^2)

J is the combined total inertia of the motor and the machine (which can be either calculated or measured). Alpha is the rate of deceleration of the motor's shaft.

Step 2. Calculate the resistance value of the external braking resistor.

$$R = \frac{(\text{Turn-on Voltage})^2}{\text{Torque x RPM}} \times 6.33 \text{ ohms}$$

Turn-on Voltage = 1.47 x V_{LL} + 5 volts, where V_{LL} is the RMS input line-to-line voltage. Turn-on voltage is 343 VDC for a nominal 230 VAC.

Torque is in lb-ft. 1 lb-ft = 0.7376 N-m.

Note that the recommended ranges of resistance values are as follows:

- 50 A DC bus supply: 8 (minimum) to 55 ohms
- 100 A DC bus supply: 4 (minimum) to 15 ohms

A lower resistor value provides higher short-duration regenerative currents but results in a reduction of the continuous power rating. A higher resistor value provides for maximum continuous power operation. Over the recommended ranges of resistance values, operation is balanced between short duration overload current conditions and continuous power conditions.

Step 3. Determine the continuous power dissipation specifications of the external braking resistor.

The continuous power rating is limited by both the fuse rating (0.9 x fuse rating) and the resistor value. The regenerative duty cycle is limited by the internal fuse. The lower value resistors will have higher peak currents and therefore the duty cycle must be limited to prevent nuisance fuse openings.

The following equations are used to determine the typical braking resistor specifications for each power supply, as shown in table 3.2.

$$\tau = \text{Max Duty Cycle} = \frac{(0.9 \times \text{Fuse Rating})^2 \times R^2}{(\text{Turn-on Voltage})^2} \text{ seconds}$$

$$\text{Max Continuous Braking Power} = (0.9 \times \text{Fuse Rating})^2 \times R \text{ watts}$$

Table 3.2 – Typical Braking Resistor Continuous Duty Power Dissipation

50 Amp Supply 8 Amp Fuse			100 Amp Supply 30 Amp Fuse		
R (ohms)	**τ (seconds)**	**Max CBP (watts)**	**R (ohms)**	**τ (seconds)**	**Max CBP (watts)**
8	0.03	414	4	0.10	2916
16	0.11	829	6	0.22	4374
24	0.25	1244	8	0.40	5832
32	0.45	1658	10	0.62	7290
40	0.71	2073	12	0.89	8748
47.6[1]	1.0/Cont	2468	12.7[1]	1.0/Cont	9258
48	Continuous	2451	14	Continuous	8403
55	Continuous	2139	15	Continuous	7843

1. Maximum continuous power resistor value

For intermittent duty the external braking resistor power dissipation is specified by:

$$\text{Resistor Power Dissipation} = \tfrac{1}{2} \times (\text{0.5 Second Overload Braking Power}) \quad \text{watt-secs}$$

$$\text{0.5 Second Overload Braking Power} = (\text{Maximum Fuse Current})^2 \times R \quad \text{watts}$$

Maximum Fuse Current is the level of current that will cause the braking fuse to melt in 2 seconds, as indicated on the KLK fuse rating curves. Use 14 amps for an 8 amp fuse, and 85 amps (maximum regenerative current with 4 ohms) for a 30 amp fuse.

Note:

$$\text{Instantaneous Maximum Braking Power} = \frac{(\text{Maximum DC Bus Voltage})^2}{R} \quad \text{watts}$$

3.3 Wiring

To reduce the possibility of electrical noise interfering with the proper operation of the drive system, exercise care when installing the wiring between the system and external devices. For detailed recommendations, refer to IEEE 518.

3.4 Grounding

ATTENTION: Ungrounded equipment presents a shock hazard. If your drive cabinet is mounted such that the cabinet is not grounded, a ground wire must be connected to the cabinet for personnel safety. Failure to observe this precaution could result in severe bodily injury or loss of life.

The grounding stud (GND) on the DC bus supply must be connected externally to earth ground (PE) as shown in figure 3.3 on page 3-8 and checked with an ohmmeter before power is applied. Use a star washer (toothed lock washer) on the grounding stud to ensure continuity.

3.5 DC Bus Supply Initial Installation

The following procedure is intended to be only a guide to assist you in installing the DC bus supply. Refer to the wiring diagrams supplied with you system for more specific information.

Step 1. Mount the DC bus supply. DC bus supplies are designed to be mounted on a flat surface using M5 or #10 screws. The holes in the top flange are key-hole shaped and the lower holes are U-shaped to facilitate mounting. The bus supply should be mounted in a location with good air flow and in close proximity to the SA500 AC Power Modules (3 mm (1/8 in) to 13 mm (1/2 in) spacing between units). See figure 3.1. Provide at least 85 mm (3.3 in) of clearance above and below the bus supply for ventilation.

Ambient air around the bus supply must be clean, dry, and free of flammable or combustible vapors, chemical fumes, oil vapor, steam, and excessive moisture and dirt.

The highest current AC Power Module should be placed closest to the bus supply. Note that the SA500 AC Power Modules (6 maximum) should be evenly distributed on each side of the bus supply. If two Power Modules are being used, one should be wired from the left of the bus supply and one should be wired from the right. If four Power Modules are being used, two should be wired from the left of the bus supply and two from the right. If an odd number of Power Modules is being used, they should be distributed as evenly as possible on each side of the bus supply. This method of Power Module placement minimizes wire length which reduces wire inductance. The continuous DC bus current for all SA500 AC Power Modules connected to the bus supply is limited to either 50A or 100A.

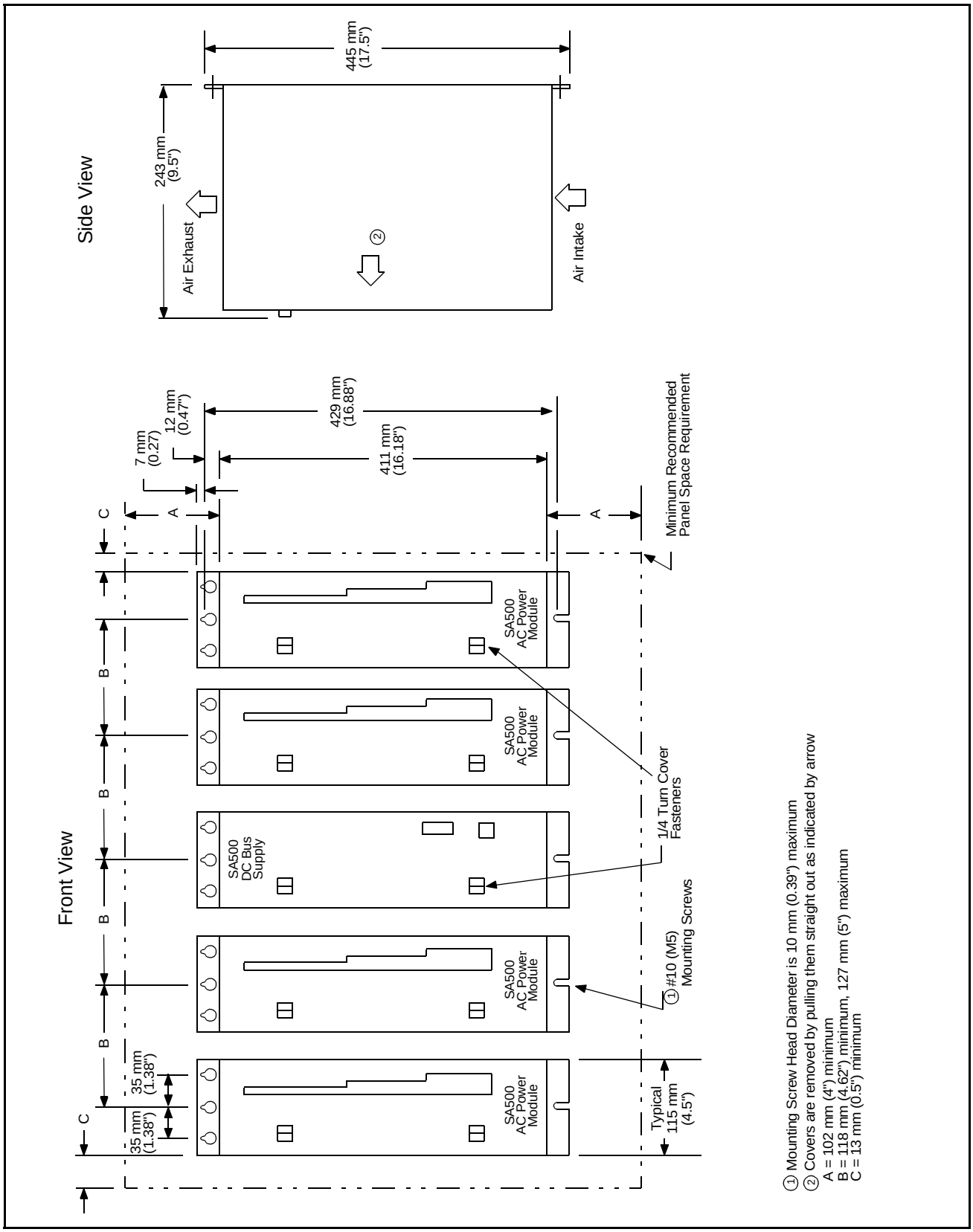

Figure 3.1 – SA500 DC Bus Supply Mounting Dimensions

Step 2. Rotate the quarter-turn cover fasteners and remove the bus supply's front cover. Check the bus supply's nameplate to ensure that the bus supply has the proper power rating (50A or 100A).

Examine jumper W1 on the printed circuit board (see figure 3.2). The jumper must be set to position B for the bus supply to operate properly. This is the factory setting. When the jumper is set to position B, the bus supply will be enabled whenever the correct three-phase input voltage is present.

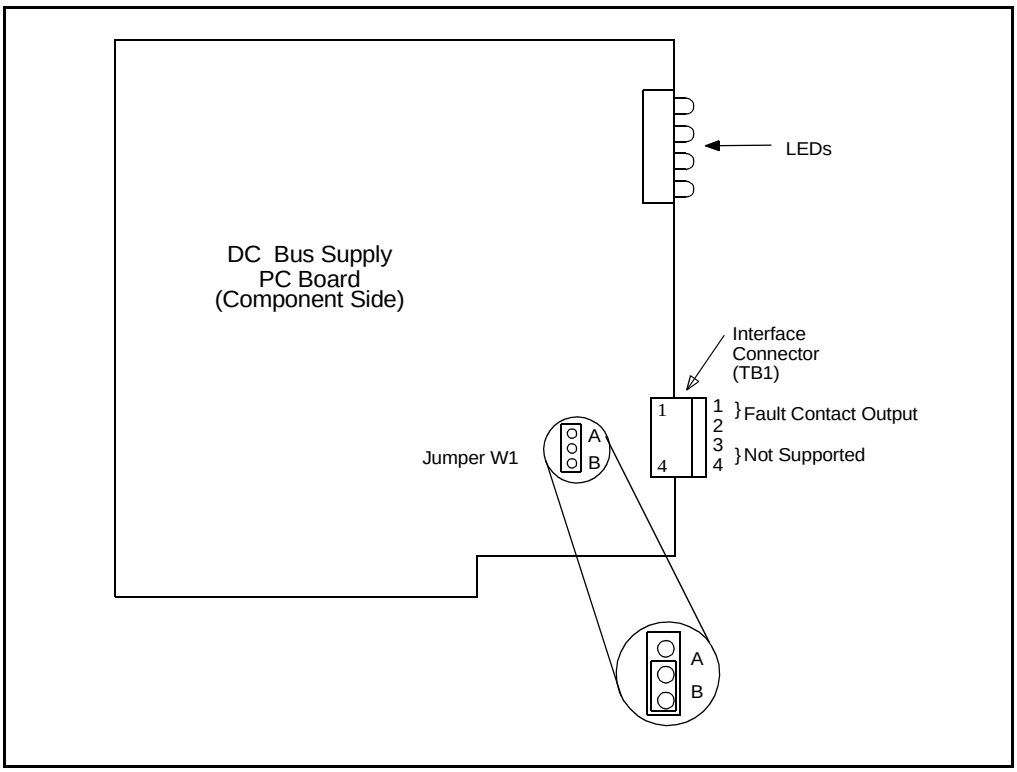

Figure 3.2 – Jumper W1

Step 3. Connect the input power wiring per the NEC and local wiring codes as shown in figure 3.3. A fuse disconnecting switch must be placed in the AC line that feeds the DC bus supply. Select the proper value of short circuit protection fuse from table 3.3. Minimum/maximum input wire sizes are given in table 3.4. The phasing of the three-phase input lines (L1, L2, L3) is not critical. The proper DC bus polarity, however, must be observed. Be sure to connect the grounding stud (GND) to earth ground (PE) as shown in figure 3.3.

Wires for connecting the DC bus and the Power Module are normally provided with engineered systems. Do not substitute other wires for those supplied. The wires are 225 mm (8.8 in) in length.

Do not over-tighten the nuts on the DC bus terminals. Use a nut-driver only and limit the torque to 4.0 Nm (36 lb-in).

ATTENTION: Fuse disconnecting switches are not designed to be opened under load. Turn off the drive before opening the switch. Failure to observe this precaution could result in damage to, or destruction of, the equipment.

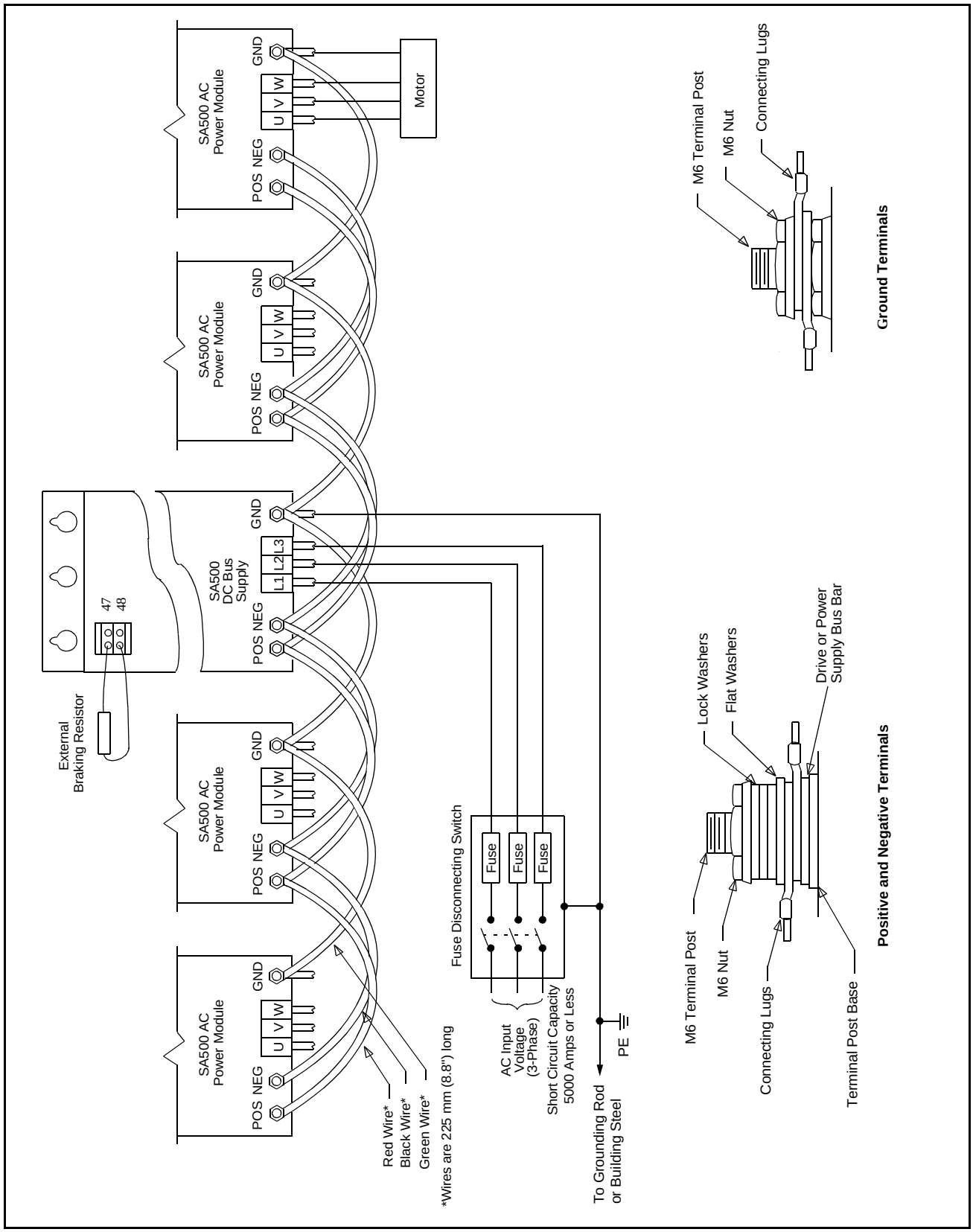

Figure 3.3 – SA500 DC Bus Supply Wiring

Table 3.3 – Short Circuit Protection

DC Bus Supply	Maximum Input Fuse UL Class RK5 250 VAC
50A (615055-2R) (615055-2T)	40 Amp
100A (615055-2S) (615055-2V)	90 Amp

Table 3.4 – Minimum/Maximum Input Wire Sizes

DC Bus Supply Current Rating	Terminals	Minimum/Maximum Wire Sizes (mm2 / gauge)
50A	L1, L2, L3	4.8 to 21.6 mm^2 (10 - 4 AWG)
100A	L1, L2, L3	13.6 to 35 mm^2 (6 - 2AWG)

Step 4. DC bus supplies 615055-2R and 615055-2S are supplied with built-in braking resistors to dissipate power that is regenerated by the motor. The 50A bus supply has one braking resistor, while the 100A bus supply has two. See table 3.5. for internal resistor specifications.

Table 3.5 – Internal Braking Resistor Specifications

Resistor Specifications	50A Bus Supply	100A Bus Supply
Trigger Voltage	1.47 ∗ RMS input line voltage (V_{LL}) + 5 volts	
Ohms	8 Ω	4 Ω
Watts	600 W	1200 W
Continuous Braking Power	414 W	1200 W
0.5 Second Overload Braking Power	1568 W	4624 W
Instantaneous Overload Braking Power	19,500 W	39,000 W

If the motor is to be operated in the regenerative mode, the application's regenerative power dissipation requirements should be evaluated. A DC bus supply using external braking resistors (615055-2T or 615055-2V) may be needed to increase the bus supply's power dissipation capacity. To calculate the proper resistor values, refer to the procedures in section 3.2.

If external resistors are to be used, connect the wires from the resistors to the terminal block at the top of the bus supply. A notch in the front cover allows the wires to be routed from the terminal block even when the front cover is installed.

Step 5. Apply power to the input wiring and check that the voltages are within operating parameters. Voltage specifications are given in Appendix A.

Step 6. Re-attach the bus supply's front cover.

3.6 Replacing the DC Bus Supply

Use the following procedure to replace a DC bus supply:

Step 1. Turn off and lock out AC input power to the bus supply.

> **ATTENTION:** DC bus capacitors retain hazardous voltages after input power has been disconnected. After disconnecting input power from the DC bus supply, wait five (5) minutes and then measure the voltage at the POS and NEG terminals of the DC bus supply and each Power Module to ensure the DC bus capacitors are discharged before touching any internal components. Failure to observe this precaution could result in severe bodily injury or loss of life.

Step 2. Wait five minutes to allow the DC bus voltage to dissipate.

Step 3. Measure the DC bus potential across the POS and NEG terminals of the DC bus supply and at each Power Module before working on the unit.

When the DC bus potential is down to less than 5V, touch a 50 Ω, 50 W or larger resistor across the POS and NEG terminals for 20 seconds to allow any remaining DC bus voltage to dissipate.

Remove the resistor and re-measure the DC bus potential to ensure the DC bus capacitors are completely discharged before touching any internal components.

Step 4. Disconnect the input power wires from the L1, L2, and L3 terminals.

Step 5. Disconnect the DC bus wires from the POS, NEG, and GND terminals.

Step 6. Disconnect the external braking resistor (if used) from the terminal block at the top of the DC bus supply.

Step 7. Remove the screws that attach the bus supply to its mounting surface.

Step 8. Install the replacement bus supply by following steps 3 through 7 in reverse order.

CHAPTER 4

Diagnostics and Troubleshooting

ATTENTION: DC bus capacitors retain hazardous voltages after input power has been disconnected. After disconnecting input power from the DC bus supply, wait five (5) minutes and then measure the voltage at the POS and NEG terminals of the DC bus supply and each Power Module to ensure the DC bus capacitors are discharged before touching any internal components. Failure to observe this precaution could result in severe bodily injury or loss of life.

Use the procedures described in the following section to diagnose and troubleshoot DC bus supply faults. If the problem cannot be corrected by following these instructions, the DC bus supply is not user-serviceable.

4.1 DC Bus Supply Faults

Bus supply faults are indicated by the LEDs visible on the faceplate.

4.1.1 The PHASE LOSS LED Is On

Problem: At least one phase of the three-phase AC input power is missing.

Use the following procedure to correct the problem:

Step 1. Cycle the AC input power to the bus supply. If the PHASE LOSS LED remains on, proceed to step 2.

Note that this LED may light when low AC line voltage is detected or when line notching occurs. The LED will remain on until power is cycled.

Step 2. Using a voltmeter, verify that AC input power is reaching the DC bus supply input terminals (L1, L2, L3).

Step 3. If AC power is not reaching the bus supply, check the incoming AC power lines and fuses.

If AC power is reaching the bus supply and the PHASE LOSS LED remains on, replace the DC bus supply.

4.1.2 The OVERTEMP LED Is On

Problem: The bus supply has overheated and shut down.

Allow the bus supply to cool down. Then cycle power and try running it again. The LED will remain on until power is cycled. Typically, if the ambient temperature is above the rated value, fan failure or air flow blockage may be the cause. If the bus supply overheats repeatedly, it may be overloaded and should be replaced with a larger unit.

4.1.3 The PSM READY LED Is Off

Problem: The DC bus voltage is different from what is expected.

During normal operation, the PSM READY LED is on when AC power is applied and there are no bus supply faults. If this LED turns off, use the following procedure to isolate the problem:

Step 1. Using a voltmeter, verify that the DC bus supply is receiving the correct AC input voltage (terminals L1, L2, L3).

Step 2. If the bus supply is not receiving the correct input voltage, check the AC input power lines.

If the bus supply is receiving the correct voltage, proceed to step 3.

Step 3. Check the other fault LEDs. the PHASE LOSS and OVERTEMP LEDs should be off. If either LED is on, refer to the appropriate troubleshooting section in this chapter.

Step 4. If the PSM READY LED remains off, replace the DC bus supply.

4.2 DC Bus Braking Fuse Is Blown

Problem: SA500 AC Power Module regeneration does not work properly (i.e., braking is slower than expected) and the Power Module experiences frequent DC bus overvoltage faults.

These problems may be caused by a blown braking fuse. Use the following procedure to determine if the braking fuse is blown:

Step 1. Turn off and lock out AC input power to the bus supply.

> **ATTENTION:** DC bus capacitors retain hazardous voltages after input power has been disconnected. After disconnecting input power from the DC bus supply, wait five (5) minutes and then measure the voltage at the POS and NEG terminals of the DC bus supply and each Power Module to ensure the DC bus capacitors are discharged before touching any internal components. Failure to observe this precaution could result in severe bodily injury or loss of life.

Step 2. Wait five minutes to allow the DC bus voltage to dissipate.

Step 3. Measure the DC bus potential across the POS and NEG terminals of the DC bus supply and each Power Module before working on the unit.

When the DC bus potential is down to less than 5V, touch a 50 Ω, 50 W or larger resistor across the POS and NEG terminals for 20 seconds to allow any remaining DC bus voltage to dissipate.

Remove the resistor and re-measure the DC bus potential to ensure the DC bus capacitors are completely discharged before touching any internal components.

Step 4. Rotate the quarter-turn cover fasteners to the open position and remove the bus supply's front cover.

Step 5. Remove the fuse (see figure 4.1). Use an ohmmeter to check if the fuse is

open. If the fuse is blown, install a replacement that has the proper ratings. Fuse specifications are provided in Appendix A.

Step 6. Re-install the bus supply's front cover. Rotate the quarter-turn cover screws to the closed position.

Step 7. Re-apply AC input power and test the bus supply for proper operation.

If the DC bus overvoltage condition continues to occur, check the braking resistor to see if it is open or shorted.

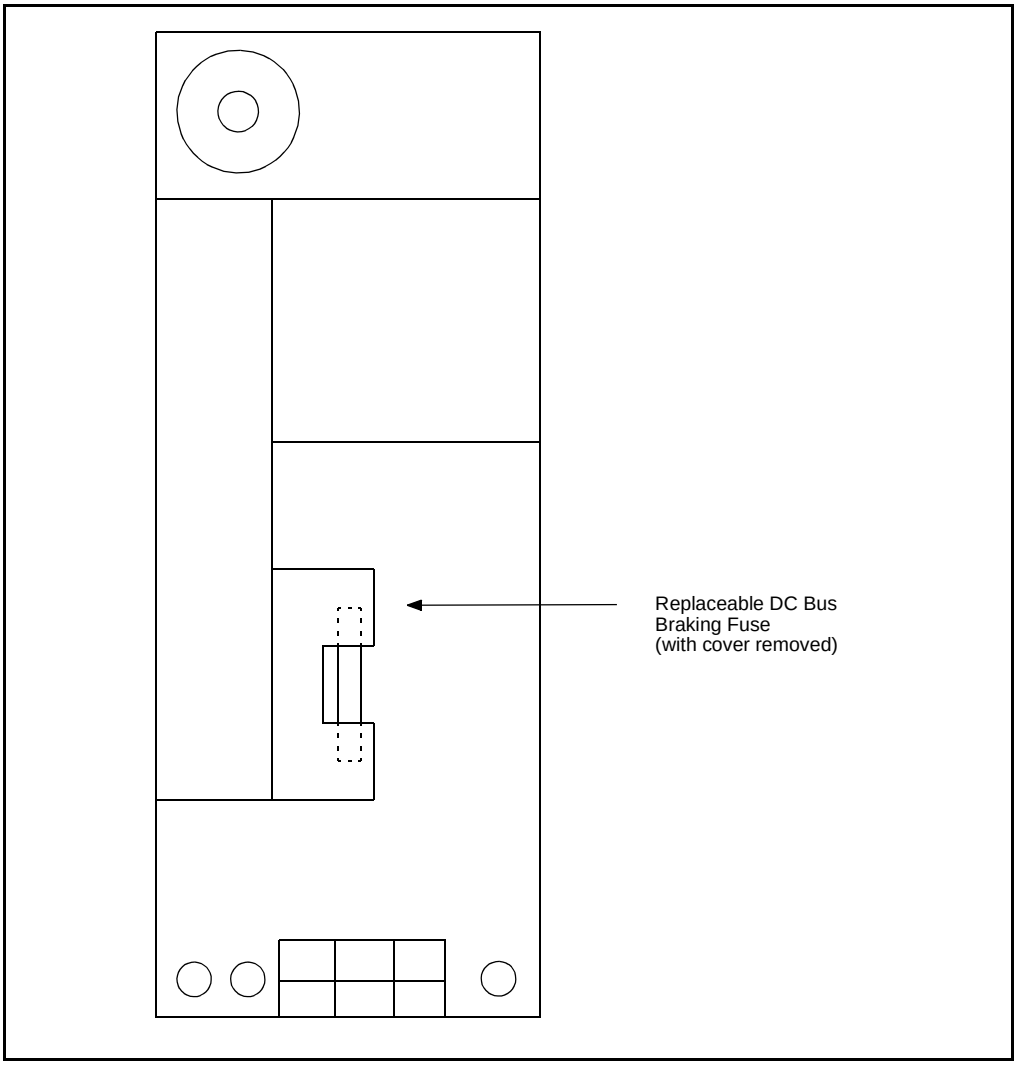

Figure 4.1 – DC Bus Braking Fuse

APPENDIX A

Technical Specifications

Ambient Conditions

- Operating Temperature: 0 to 50° C (32 to 122° F)
- Relative Humidity: 5 to 95% (non-condensing)

Dimensions

- Height: 445 mm (17.5 in)
- Width: 115 mm (4.5 in)
- Depth: 250 mm (9.8 in)
- Weight: 11.9 kg (26.2 lbs)

Input Voltage

- 230 VAC RMS (+15%, -5%) three-phase
- 5000 Amps Maximum Symmetrical Available Fault Current Source

Output Voltage

- 310 to 375 VDC

Continuous Output DC Amperes

- 50A units: 50A
- 100A units: 100A

Maximum Output DC Amperes (10 Second Overload)

- 50A units: 150A
- 100A units: 450A

Internal Braking Resistor Continuous Power Dissipation

- 50A units: 414W
- 100A units: 1200W

Internal Braking Resistor 0.5 Second Overload Power Dissipation

- 50A units: 1568W
- 100A units: 4624W

Internal Braking Resistor Instantaneous Overload Power Dissipation

- 50A units: 19,500W
- 100A units: 39,000W

DC Bus Braking Fuse

- DC Bus Supply (50A) with Internal Braking Resistor: Littelfuse KLK D8, Fast Acting, 600V, 8A or Bussman KLM-8
- DC Bus Supply (50A) with External Braking Resistor: Littelfuse KLK D8, Fast Acting, 600V, 8A or Bussman KLM-8
- DC Bus Supply (100A) with Internal Braking Resistor: Littelfuse KLK D20, Fast Acting, 600V, 20A or Bussman KLM-20
- DC Bus Supply (100A) with External Braking Resistor: Littelfuse KLK D30, Fast Acting, 600V, 30A or Bussman KLM-30

Maximum Power Losses[1]

- 50A units: 110W + intermittent watts from braking circuit
- 100A units: 240W + intermittent watts from braking circuit

1. Typical power losses are one-half of these values

APPENDIX B

Block Diagram

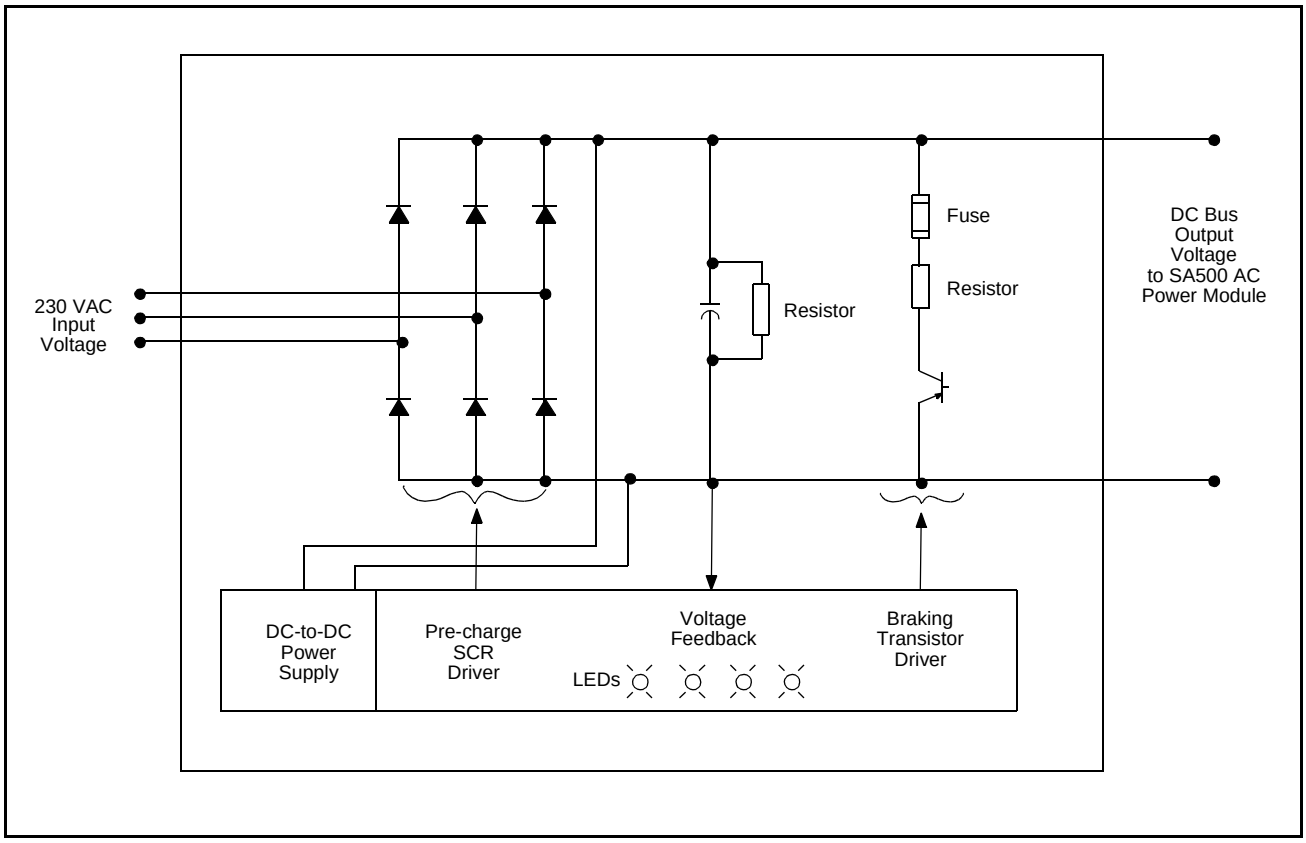

APPENDIX C

Motor Current Specifications

Table C.1 – Industrial Brushless Motors

Model No.	HP	Max Speed RPM	Encl	Cont Iac RMS Amps	Cont Idc Amps (Bus Supply Requirement)	Max Iac RMS Amps	Max Idc Amps (Bus Supply Requirement)	Min DC Bus Supply
B14H3050	1	2000	TENV	3.3	4.2	6.5	8.2	1
B14H3060	2	2000	TENV	6.5	8.2	13.1	16.5	1
B18H3070	3	2000	TENV	9.8	12.4	19.6	24.7	1
B18H3080	4	2000	TENV	13.1	16.5	26.3	33.2	1
P21M0309	7.5	1750	TENV	24.0	30.3	48.0	60.5	1
P21M0310	10	1750	TENV	32.0	40.3	64.0	80.7	1
P21M0311	15	1750	TENV	48.0	60.2	96.0	121.0	2

1. Minimum bus supply: 615055-2R or 615055-2T. Output continuous current (Idc) = 50A.
2. Minimum bus supply: 615055-2S or 615055-2V. Output continuous current (Idc) = 100A.

Refer to the DPS SA500 Power Modules instruction manual (S-3018) for Iac current overload rating information (speed-torque charts).

Table C.2 – Brushless Servo Motors

Model No.	HP	Max Speed RPM	Encl	Cont Iac RMS Amps	Cont Idc Amps (Bus Supply Requirement)	Max Iac RMS Amps	Max Idc Amps (Bus Supply Requirement)	Min DC Bus Supply
S2005-K-R	5.9	4000	TENV	3.0	3.8	6.5	8.2	1
S3007-N-R	7.6	3000	TENV	2.0	2.5	6.3	7.9	1
S3016-N-R	20	3000	TENV	5.7	7.2	14.3	18.0	1
S4030-P-R	30	3000	TENV	4.8	6.1	13.6	17.1	1
S4050-P-R	60	3000	TENV	9.6	12.1	30.4	38.3	1
S4075-R-R	90	2500	TENV	9.5	12.0	28.4	35.8	1
S6100-Q-R	100	2000	TENV	11.8	14.9	26.8	33.8	1
S6200-Q-R	200	2000	TENV	24.2	30.5	58.1	73.3	1
S6300-Q-R	320	2000	TENV	36.0	45.4	77.6	97.8	1
S8353-S-R	350	2000	TENV	32.5	41.0	57.6	72.6	1
S8500-S-R	480	2000	TENV	39.1	49.3	95.6	120.5	1

1. Minimum bus supply: 615055-2R or 615055-2T. Output continuous current (Idc) = 50A.

Refer to the DPS SA500 Power Modules instruction manual (S-3018) for Iac current overload rating information (speed-torque charts). I/M S-3018 also contains horsepower ratings for the brushless servo motors.

Table C.3 – Induction Motors

Model No.	HP	Max Speed RPM	Encl	Cont Iac RMS Amps	Cont Idc Amps (Bus Supply Requirement)	Max Iac RMS Amps	Max Idc Amps (Bus Supply Requirement)	Min DC Bus Supply
P14A5810	1	1757	TENV	3.0	3.8	4.5	5.7	1
P14A5804	1.5	1756	TENV	4.4	5.5	6.6	8.3	1
P14A5813	2	1764	TENV	5.8	7.3	8.7	11.0	1
P18A6111	3	1758	TENV	9.0	11.3	13.5	17.0	1
P18A6113	5	1737	TENV	14.4	18.2	21.6	27.2	1
P21L0212	5	1781	TENV	15.3	19.3	23.0	28.9	1
P21L0213	5	1180	TENV	14.8	18.7	22.2	28.0	1
P21L0214	5	880	TENV	14.8	18.7	22.2	28.0	1
P21L0215	7.5	1780	TENV	21.5	27.1	32.3	40.7	1
P21L0216	7.5	1177	TENV	20.6	26.0	30.9	39.0	1
P21L0217	7.5	866	TEAO	21.8	27.5	32.7	41.2	1
P21L0218	10	1779	TENV	27.8	35.1	41.7	52.6	1
P21L0219	10	1171	TEAO	27.3	34.4	41.0	51.6	1
P21L0220	10	868	TEAO	28.0	35.3	42.0	53.0	1
P21L0221	15	1768	TEAO	42.0	53.0	63.0	79.4	2
P21L0222	15	1172	TEAO	42.0	53.0	63.0	79.4	2
P21L0223	15	872	TEAO	41.1	51.8	61.7	77.7	2

1. Minimum bus supply: 615055-2R or 615055-2T. Output continuous current (Idc) = 50A.
2. Minimum bus supply: 615055-2S or 615055-2V. Output continuous current (Idc) = 100A.

Induction motor Iac current values are rated at 150% overload for 1 minute.

APPENDIX D

Compliance with Electromagnetic Compatibility Standards

D.1 Introduction

This appendix provides information on the SA500 DC Bus Supplies and AC Power Modules' compliance with European Community electromagnetic compatibility (EMC) standards and covers the following:

- requirements for standards compliance
- guidelines on installing the equipment
- instructions on how the drive must be wired.

The SA500 DC Bus Supplies and AC Power Modules listed on the Declaration of Conformity (DOC) (Ref: Drawing 422802-201) have been tested and are in compliance with the following standards when installed as described in this manual and amended herein:

- EN55011 (1991) Limits and methods of measurement of radio disturbance characteristics of industrial, scientific, and medical (ISM) radio-frequency equipment.
- EN50082-2 (1995) Electromagnetic Compatibility - Generic Immunity Standard Part 2: Industrial Environment

Note that the conformity of the SA500 DC Bus Supplies and AC Power Modules to the above standards does not guarantee that the entire installation will be in conformance.

For a copy of the Declaration of Conformity, contact your local Rockwell Automation sales office.

D.2 Compliance Requirements

In order for the SA500 DC Bus Supplies and AC Power Modules to conform to the standards listed in section D.1, the equipment must:

- be accompanied by the DOC (Ref: Drawing 422802-201).
- have a CE mark. This mark is found on the product.
- be mounted inside a cabinet.
- be powered through a EMI line filter.
- be installed in accordance with the instructions in this appendix.

If these conditions are not met and CE conformity is desired, contact your local Rockwell Automation Drive Systems Sales Representative.

D.3 Installing the Equipment

The equipment must be mounted inside a steel cabinet. The cabinet door must be grounded to the main cabinet. Any accessory plates attached to the cabinet door must be grounded to the same point on the cabinet as the door. The cabinet must also have floor pans with the cutouts for cable entries kept to an absolute minimum.

The SA500 DC Bus Supplies and AC Power Modules and EMI Filter should be mounted to the panel in accordance with the installation instructions provided in chapter 3 of this manual.

D.4 Wiring Practices

This section describes how the SA500 drive must be wired to conform to the standards listed in section D.1. Figure D.1 shows an SA500 wiring example.

D.5 AC Input Power

A 110 Amp three-phase line filter (M/N 612421-2A) must be installed in the power lines. The leads between the filter and the DC Bus Supply should be as short as possible and must be routed away from the leads to the input of the filter. Both ground connections must be used and the ground leads should be kept as short as possible.(£ 6.0”). This filter may be mounted to a separate bracket and placed on edge to reduce the panel footprint so long as the bracket is properly grounded to the control panel.

A three-phase input power surge protector (M/N 600686-45A) must be installed on the 230 VAC lines at the line input to the EMI Filter. The leads on the surge protector should be kept as short as possible.

The 115 VAC source voltage used to power the digital I/O must be supplied through a 1 kVA control transformer (M/N 417155-V) with a MOV (M/N 411026-X) mounted across transformer terminals X1 and X2. The X2 terminal of the control transformer must also be grounded to the control panel.

D.6 Motor Output

The motor leads (three phases and ground) must be installed in conduit. The conduit should be terminated at the cabinet.

D.6.1 Grounding

The incoming 230 VAC three-phase power must be connected to the grounding stud on the DC Bus Supply.

The DC Bus Supply and AC Power Module must be grounded in accordance with the guidelines provided in section 3.4 of this manual. The ground lead from the motor must be connected to the AC Power Module and then connected to the DC Bus Supply via the jumper supplied with the AC Power Module.

D.6.2 Rail Ports

The two rail Rail Ports must not be used for CE applications. As an alternative, digital I/O can be configured using either the digital I/O on the Resolver and Drive I/O Module or the Allen-Bradley Remote I/O Interface Module (M/N 57C443) and Allen-Bradley I/O.

D.6.3 Resolver and Analog Input Wiring

Resolver cable M/N 417900-207CG is recommended. This specific cable was chosen per instruction manual D2-3115-2, (Installing, Operating, and Maintaining Engineered Drive Systems), as the only cable not required to be installed in conduit. Conduit is not required for CE purposes, but it may be required for a specific application.

Use shielded 2-conductor cable for analog input wiring. The shield drain wire is to be grounded to the cable terminal board and left open at the opposite end.

D.6.4 Digital I/O Wiring

The 115 VAC source voltage for the digital I/O must be supplied from the secondary of the isolation transformer. When a main contactor is used, an RC suppressor (M/N 600686-33A or equivalent) must be installed across the coil contacts.

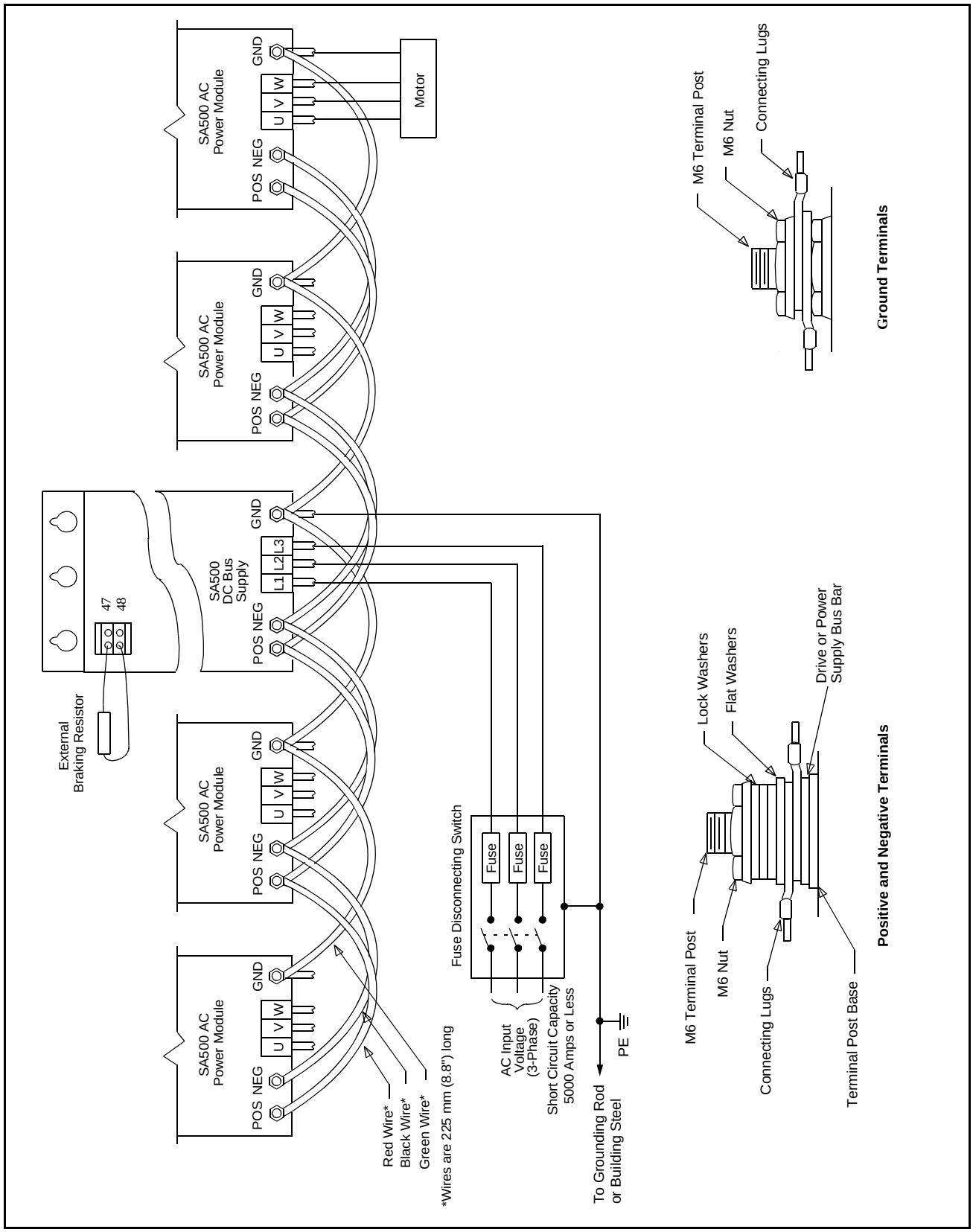

Figure D.1 – Typical SA500 Wiring Example for CE Compliance

INDEX

B

Block diagram, B-1
Braking fuse
    checking for a blown fuse, 4-2 to 4-3
    fuse location, 4-3
Braking resistor
    external braking resistor, 3-3 to 3-4
    internal braking resistor specifications, 3-9

C

Compliance with electromagnetic compatibility
    standards, D-1 to D-4

D

DC bus supply motoring current, 3-2
Diagnostics and troubleshooting, 4-1 to 4-3
Documentation, 1-2

E

Electrical description, 2-3

F

Faceplate of bus supply, 2-1
Faults, 4-1 to 4-2
    over temperature, 4-1
    phase loss, 4-1
    PSM not ready, 4-2
Fuses, 3-9

G

Grounding, 3-4

I

Installation guidelines, 3-1 to 3-10
    grounding, 3-4
    initial installation, 3-5 to 3-10
    mounting dimensions, 3-6
    selecting a DC bus supply, 3-2
    selecting an external braking resistor, 3-3 to 3-4
    short circuit protection, 3-9
    wiring, 3-4, 3-8
Interface connector TB1, 2-2 to 2-3
    circuitry of terminals 1 & 2, 2-3
Internal power dissipation specifications, 3-2
Introduction, 1-1 to 1-2

L

LED indicators, 2-2, 4-1 to 4-2
    Overtemp LED on, 4-1
    Phase loss LED on, 4-1
    PSM ready LED off, 4-2

M

Mechanical description, 2-1 to 2-3
Model numbers, 1-1
Motor current specifications, C-1 to C-2
Mounting dimensions, 3-6

R

Related hardware, 1-2
Related publications, 1-2
Replacing the DC bus supply, 3-10

S

Selecting a DC bus supply *See* Installation
    guidelines
Selecting an external braking resistor *See*
    Installation guidelines

T

Technical specifications, A-1 to A-2

W

Wiring, 3-4, 3-8, D-4

DIF

Documentation Improvement Form

Use this form to give us your comments concerning this publication or to report an error that you have found. For convenience, you may attach copies of the pages with your comments. After you have completed this form, please return it to:

Rockwell Automation
RGA (Technical Publications)
25001 Tungsten Road
Cleveland, Ohio 44117

Fax: 216.266.7120

Publication Name:	
Publication Number:	Publication Date:

Comments: _____

_____

_____

_____

_____

_____

Your Name:	Date:
Company Name:	Phone: ( )
Address:	

Thank you for your comments.

Technical Writing Internal Use	
Date:	DIF Number:
Follow-Up Action:	

Rockwell Automation

Rockwell Automation / 24703 Euclid Avenue / Cleveland, Ohio 44117 / (216) 266-7000

Rockwell Automation

Printed in U.S.A. S-3017-1 September 1998