Power Master

AC/DC DIGITAL BATTERY CHARGER

DBC Series

USER MANUAL

CONTENTS

INTRODUCTION

Power Master Digital Battery Charger, or DBC in short, is a smart and light weighted battery charger with unique LCD & LED Displays to allow users to read all information while charging, and to adjust charging current, charging time, etc. With this smart battery charger, dual output and pulse charge are also available with larger power models. To prolong battery lifespan, protections, pre-charge, and automatic multi-rate charging functions are specially designed for this purpose.

BATTERY CHARGER FEATURES

Using DBC series battery chargers can save more than 25% of main power cost, and in addition to protect your batteries and to extend lifespan of batteries.

Main Features

1. **Unique LCD (digital meter) Display**
   For all models except 2Amp(12Vdc), 6Amp(12Vdc), 1Amp(24Vdc), and 4Amp(24Vdc), a unique LCD Display is attached for indicating both status of the charger and battery level, voltage, current and capacity. This further extends the function of a battery charger as it is now more intelligent and more user-friendly. Adjustments for charging current and charging time are possible.
2. **LED Display**
   Clear and easy to understand LED Displays: Red (power), Green (floating charge), Orange (equalizer charge)
3. **Automatic Multi-Rate Charging Function**
   The DBC chargers are able to detect the rate of current needed during charging and enable pre-charge, equalizer charge, or floating charge accordingly.
4. **Dual Output**
   For models with 25Amp(12Vdc), 14Amp(24Vdc), 9Amp(36Vdc), 7Amp(48Vdc) and above, dual output is designed for connecting to two battery banks and charging both batteries at the same time. Each output has one rectifier to prevent countercurrent from happening. Ideally, the two battery banks should have same battery capacity, else the unbalance in different capacities may cause over charging.
5. **Pulse charge**
   For models with 45Amp(12Vdc), 23Amp(24Vdc), 15Amp(36Vdc), 11Amp(48Vdc) and above, this function is available to fully charge the batteries and to increase the charging efficiency. For all other models except 2Amp(12Vdc), 6Amp(12Vdc), 1Amp(24Vdc), and 4Amp(24Vdc), pulse charge at beginning can be added for 12V and 24V upon request.

6. **Pre-charge**

   When batteries are over discharged, bulk charging could damage the batteries. In order to prevent this from happening, pre-charge function will be initiated automatically once the charger detects battery voltage under 10V. When start charging, the charging current is limited to 50% and pre-charge timer will start counting for 30 minutes. If the battery voltage increases to above 11.5V within 30 minutes, the charging current will return to 100% again.

   This function is available for models

   12Vdc: 10A~30Amp 24Vdc: 7A~17Amp 36Vdc: 4A~11Amp 48Vdc: 3A~8Amp

7. **Cooling fan controlled by floating voltage**

   When reaching to floating stage, rotating speed of the fan will slow down or the fan will stop in order to increase lifespan of fan. During bulk charging, the fan will rotate in fast speed to lowering the temperature.

   With 2Amp(12Vdc), 6Amp(12Vdc), 1Amp(24Vdc), and 4Amp(24Vdc) models, cooling fans are controlled by temperature instead of floating voltage.

8. **Exquisite case design**

   The aluminum housing makes the charger to have best thermally conductive performance with modern case design.

9. **Adapted to each battery technology**

   Chargeable for **Lead-Acid Battery** (liquid electrolyte, gel electrolyte, lead calcium, etc…)

   DBC for Lithium Battery, please contact sales persons individually.

Protections

1. **Short-circuit Protection**

   The charger output will cut-off automatically when short circuit.

2. **Overload protection**

   The charger output current is limited automatically when overload.

3. **Reverse polarity protection**

   The charger output will cut-off automatically when batteries are in reverse connection. Models of 30Amp(12Vdc), 17Amp(24Vdc), 11Amp(36Vdc), 8Amp(48Vdc) and above are protected by fuse; all other models are protected by circuit.

4. **Over charge protection**

   Using fixed voltage and limited current to avoid overcharging the batteries

5. **Temperature protection**

   If the temperature of environment or the case of battery charger is too high (around 65℃~75℃), the unit will adjust the current automatically to protect battery charger and batteries.

SAFETY INSTRUCTION

Misusing or incorrectly connecting the Battery Charger may damage the equipment or create hazardous conditions for users. Read the following safety instructions and pay special attention to all Caution and Warning statements in the guide.

Warnings identify conditions that may result in personal injury or loss of life.
Cautions identify conditions or practices that may damage the unit or other equipment.

Battery Related

1. To reduce the risk of battery explosion, follow these instructions and those marked on the battery.
2. Never smoke or allow an open spark or flame in the vicinity of the battery or engine.
3. **DBC Series was designed for charging Lead-Acid batteries only (liquid electrolyte, gel electrolyte, lead calcium, etc...).**
4. Never charge a frozen battery. Not to recharging non-rechargeable batteries.
5. Take necessary safety precautions when installing the charger near a battery or in a battery compartment (Follow safety instructions given by the battery manufacturer).
6. Never place the charger directly above or below the battery being charged; gases or fluids from the battery will corrode and damage the charger. Locate the charger as far away from the battery as DC cables permit.

Charger Related

1. Do not operate the charger in a closed-in area or restrict ventilation in any way. Install in a well ventilated, cool, dry place.
2. Do not expose the Battery Charger to moisture, rain, or snow.
3. The charger must not be operated in a damp or wet environment. When mounting in a boat, make sure it is not subjected to bilge water splash.
4. Disconnect the AC input power to the charger before connecting / disconnecting the batteries or other DC loads or when working on the charger.
5. To reduce risk of damage to electric plug and cord, pull by plug rather than cord when disconnecting the Battery Charger.
6. Do not operate the charger if the power cord is damaged. Do not operate Battery Charger with damaged cord or plug—have the cord or plug replaced.
7. The battery charger must only be plugged into an earthed socket-outlet.

Personal Related

1. Someone should be within range of your voice or close enough to come to your aid when you work near a battery.
2. Have plenty of fresh water and soap nearby in case battery acid contacts skin, clothing, or eyes.
3. Wear complete eye protection and clothing protection. Avoid touching eyes while working near battery.
4. If battery acid contacts skin or clothing, wash immediately with soap and water. If acid enters eye, immediately flood eye with running cold water for at least 10 minutes and get medical attention immediately.
5. NEVER smoke or allow a spark or flame in the vicinity of battery or engine.
6. Be extra cautious to reduce risk of dropping a metal tool onto a battery. It might spark or short-circuit the battery or other electrical part that may cause an explosion.
7. Remove personal metal items such as rings, bracelets, necklaces, and watches when working with a battery.

DC Connection Precautions

Use red insulated wire(s) for positive connection(s) and black for negative connection(s).

Polarity errors are excluded from warranty.

1. Connect and disconnect the DC cables only after removing the AC cord from the electric outlet.
2. When attaching the clips to the battery posts, twist or rock back and forth several times to make a connection. This tends to keep the clips from slipping off the terminals and helps to reduce the risk of sparking. Failure to follow these safety guidelines may cause personal injury and/or damage to the Battery Charger.

LCD (Digital Meter) DISPLAY GUIDE

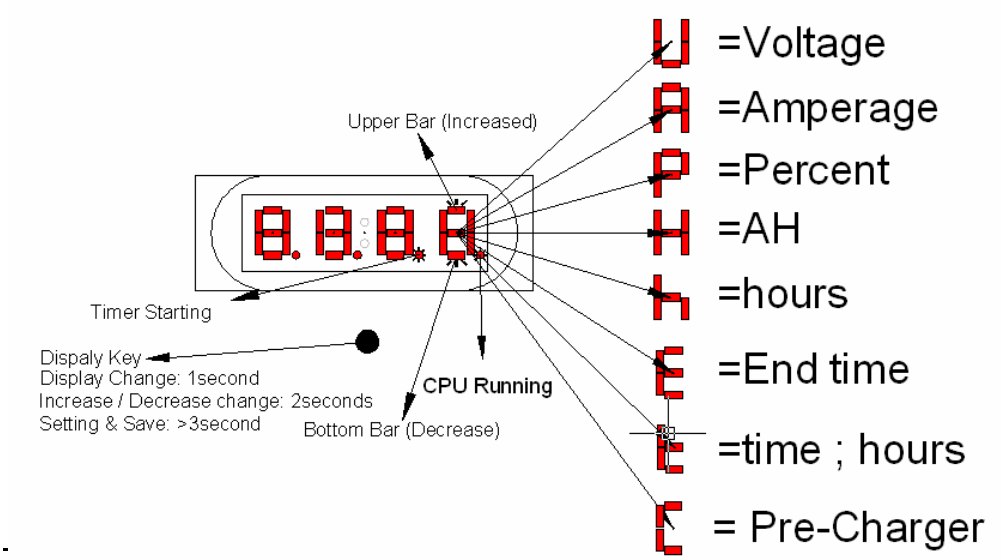

Item	Descriptions
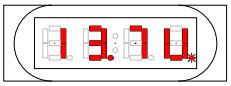	**O/P Voltage "V":** Default display
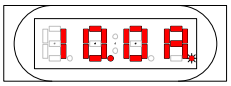	**O/P Current, Charging Current "A":** The O/P current will display after pressing "Display Key" for 1 second while displaying "V". Press & hold “Display Key” for 3 seconds while displaying “A” to enable O/P current “zero calibration” (the period approx. 10 seconds) Press “Display Key” for 2 seconds to disable “zero calibration.” (For safety concerns, zero calibration is not recommended)
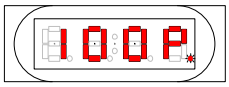	**Battery Level "P":** The percentage of battery capacity at the moment will display after pressing "Display Key" for 1 second while displaying "A".
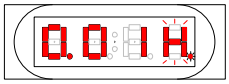 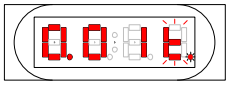	**Total Charging Capacity "AH" (Ampere-Hour):** AH calculation will be initiated when charging current >1A, "H" twinkles when “AH" is operating. Press and hold "Display Key" for 3 seconds while displaying "H" to enable AH to zero. "H" stops twinkling when "AH" function stops operating. **Timer for AH "t":** Start counting after "AH" function is operating. This is to allow users to know AH value within certain period of time.
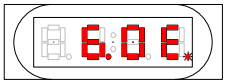	**Charging End Time Setting "E":** Initiates when voltage >setting value or charging current <30% of rating. Press & hold "Display Key" for 3 seconds while displaying "E" to enable timer setting. (Upper Bar twinkle: increase; Bottom Bar twinkle: decrease) Press and hold "Display Key" for 3 seconds to save the new setting value. The 3rd dot signal flashes light means the timer is starting and while the timer stops, the 3rd dot signal solid lights.

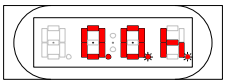	**Timer for E "h":** Start counting after "E" (timer) function is operating. When O/P current is under setting value, the 3rd dot signal flashes. It will display the total time of charge after battery has been fully charged. According to the value, the user can set the perfect charging time for his own battery. Ex. If the total time is 1 hour, user can then set the value at 1.0.E.
  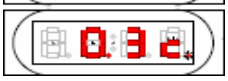	**Pre-charging "C":** When battery voltage < setting value, the pre-charge timer starts counting. Press & hold “Display Key” for 3 seconds while displaying “C” to enable timer setting (Upper Bar twinkle: increase; Bottom Bar twinkle: decrease. Each increment or decrement represents 0.1 hour). Press & hold “Display Key” for 3 seconds to save the new setting value. The bottom bar of small letter “c” twinkle means the charger is charging the battery by 25% of rating current. The upper bar of small letter “c” twinkle means the charger is charging the battery by 50% of rating current. When battery voltage > setting value, the charger will switch to equalizer charge stage, and LCD Display will show O/P voltage.
Other Settings & Displays	
	**O/P Current Adjustment:** Press and hold "Display Key" for 3 seconds while displaying "P" to enable O/P current adjustment. Upper Bar twinkle: Press “Display Key” to increase the value; Bottom Bar twinkle: Press “Display Key” to decrease the value. *This function is for authorized technicians only.*
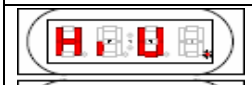 	**High Voltage (Over Charging):** If the battery voltage is over setting value, the display will show "H.V." & "xx.xv" alternately; the small letter “v” (high voltage) is to distinguish from capital “V” (O/P voltage); meanwhile, the charger will stop charging & LED off. Press “Display Key” to reset.

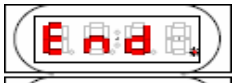
 
 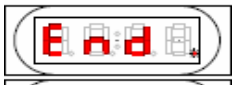
 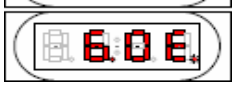
	Stop Charging:
	1. Current < 10% of rating, the display will show “End” & ”x.x h.” alternately.
	  a. Chargers without float charge stage will stop charging and have LED off.
	  b. Chargers with float charge stage available will switch to float charging and have green LED on.
	2. When over timer setting but current >10% of rating, the display will show “End” & “x.x E.” alternately.
	  a. Chargers without float charge stage will stop charging and have LED off.
	  b. Chargers with float charge stage available will switch to float charging and have green LED on.
	3. Press “Display Key” to reset

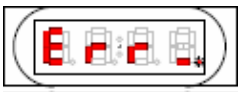 	**Battery Error:** If the battery voltage cannot rise to the setting value while the setting time of 25% of rating current pre-charging is over, the display will show “Err_” & “xx.x v” alternately. This value represents the final battery voltage. The small letter “v” (final battery voltage) to distinguish from capital “V” (O/P voltage).

FONT PANEL & BACK PANEL DISPLAY

<u>Front Panel Display</u> (Model: PM-DBC-4512D)

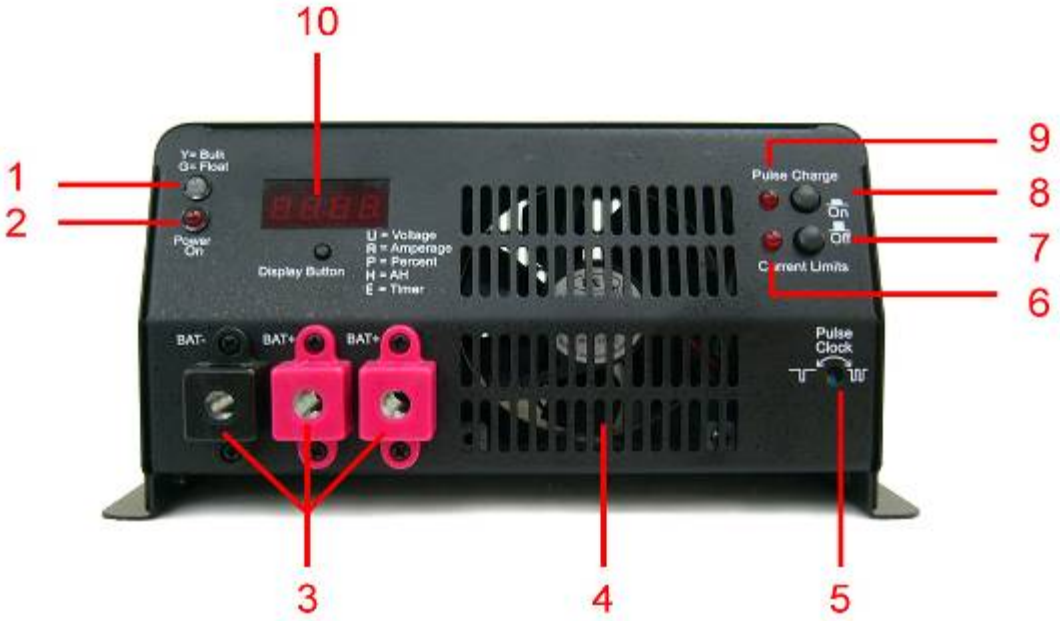

Items	Name	Description
Item 1	Charging LED	Green (floating charge), Orange (equalizer charge)
Item 2	Power LED	Red (power)
Item 3	Battery POS+/ NEG-	Dual output [*For 25Amp(12Vdc), 14Amp(24Vdc), 9Amp(36Vdc), 7Amp(48Vdc) and above only*]
Item 4	Fan	Fan automatically slows down or stops when reaching floating voltage. [*2Amp(12Vdc), 6Amp(12Vdc), 1Amp(24Vdc), and 4Amp(24Vdc) chargers are controlled by temperature*]
Item 5	Pulse Clock	Turn left: low frequency (charge 1 sec. with 3 sec. of pause) Turn right: fast frequency (charge 1 sec. with 1 sec. of pause) [*For 45Amp(12Vdc), 23Amp(24Vdc), 15Amp(36Vdc), 11Amp(48Vdc) and above only*]
Item 6	Current Limited LED	Adjust largest current to half current to charge your smaller batteries. [*For 45Amp(12Vdc), 23Amp(24Vdc), 15Amp(36Vdc), 11Amp(48Vdc) and above only*]
Item 7	Current Limited Switch	
Item 8	Pulse Charge Switch	It's difficult to have batteries fully charged, even with float charging. In this case, turn on Pulse Charge function will help to fully charge the batteries and increase charging efficiency.
Item 9	Pulse Charge LED	
Item10	LCD Display	[*All models except 2Amp(12Vdc), 6Amp(12Vdc), 1Amp(24Vdc), and 4Amp(24Vdc)*]

<u>Back Panel Connecting</u> (Model: PM-DBC-4512D)

Items	Name
Item 11	Connecting with AC input
Item 12	ON/OFF Switch

Front Panel - All Models

PM-DBC-0212F, PM-DBC-0612F **PM-DBC-0124F, PM-DBC-0424F**	**PM-DBC-1012DF, PM-DBC-0724DF** **PM-DBC-0436DF, PM-DBC-0348DF**
	
PM-DBC-2012D, PM-DBC-1224D **PM-DBC-0836D, PM-DBC-0648D**	**PM-DBC-2512D, PM-DBC-1424D** **PM-DBC-0936D, PM-DBC-0748D**
	
PM-DBC-3012D, PM-DBC-1724D **PM-DBC-1136D, PM-DBC-0848D**	**PM-DBC-4512D, PM-DBC-2324D** **PM-DBC-1536D, PM-DBC-1148D**
	
PM-DBC-9012D, PM-DBC-4524D, PM-DBC-3036D, PM-DBC-2248D	
	

Back Panel - All Models

PM-DBC-0212F, PM-DBC-0612F **PM-DBC-0124F, PM-DBC-0424F**	**PM-DBC-1012DF, PM-DBC-0724DF** **PM-DBC-0436DF, PM-DBC-0348DF**
	
PM-DBC-2012D, PM-DBC-1224D **PM-DBC-0836D, PM-DBC-0648D**	**PM-DBC-2512D, PM-DBC-1424D** **PM-DBC-0936D, PM-DBC-0748D**
	
PM-DBC-3012D, PM-DBC-1724D **PM-DBC-1136D, PM-DBC-0848D**	**PM-DBC-4512D, PM-DBC-2324D** **PM-DBC-1536D, PM-DBC-1148D**
	
PM-DBC-9012D, PM-DBC-4524D, PM-DBC-3036D, PM-DBC-2248D	
	

Dimensions – All Models

- **PM-DBC-0212F, PM-DBC-0612F, PM-DBC-0124F, PM-DBC-0424F**

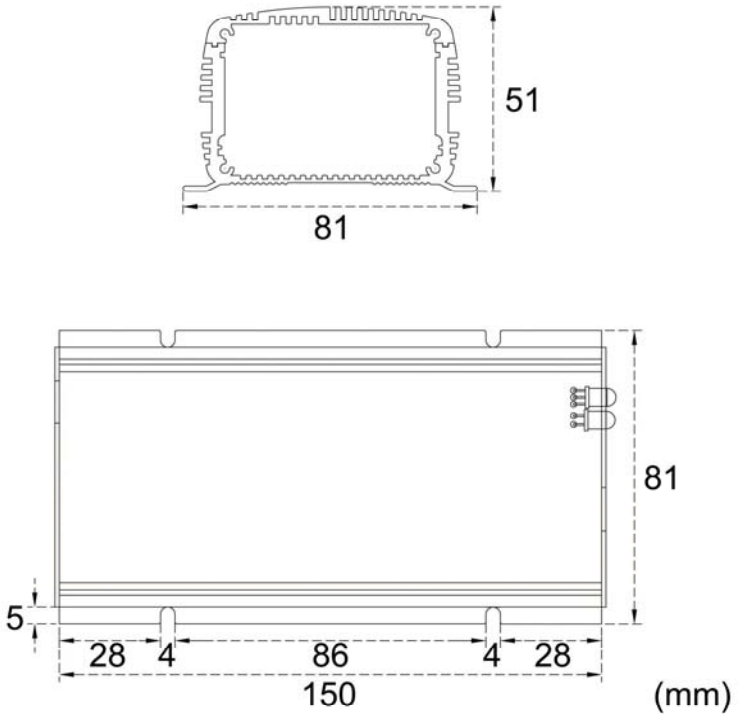

- **PM-DBC-1012DF, PM-DBC-0724DF, PM-DBC-0436DF, PM-DBC-0348DF**

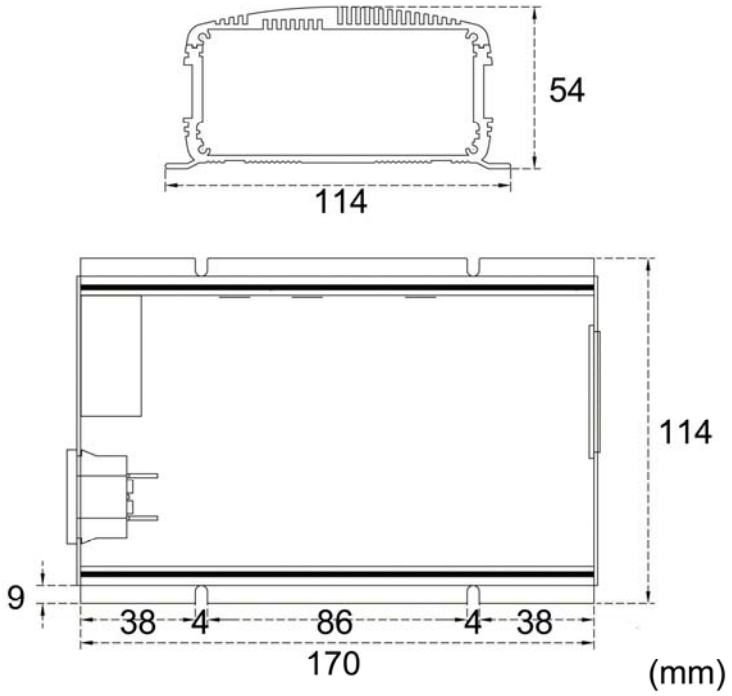

- **PM-DBC-2012D, PM-DBC-1224D, PM-DBC-0836D, PM-DBC-0648D**

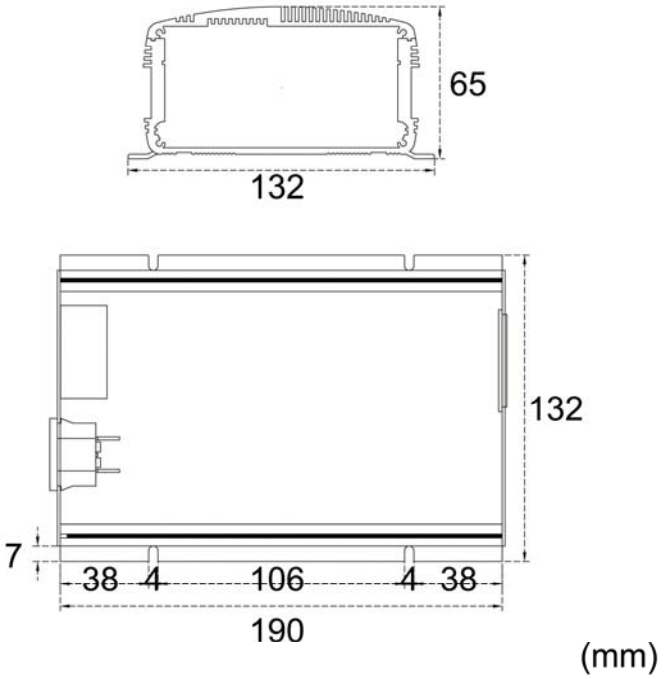

- **PM-DBC-2512D, PM-DBC-1424D, PM-DBC-0936D, PM-DBC-0748D**

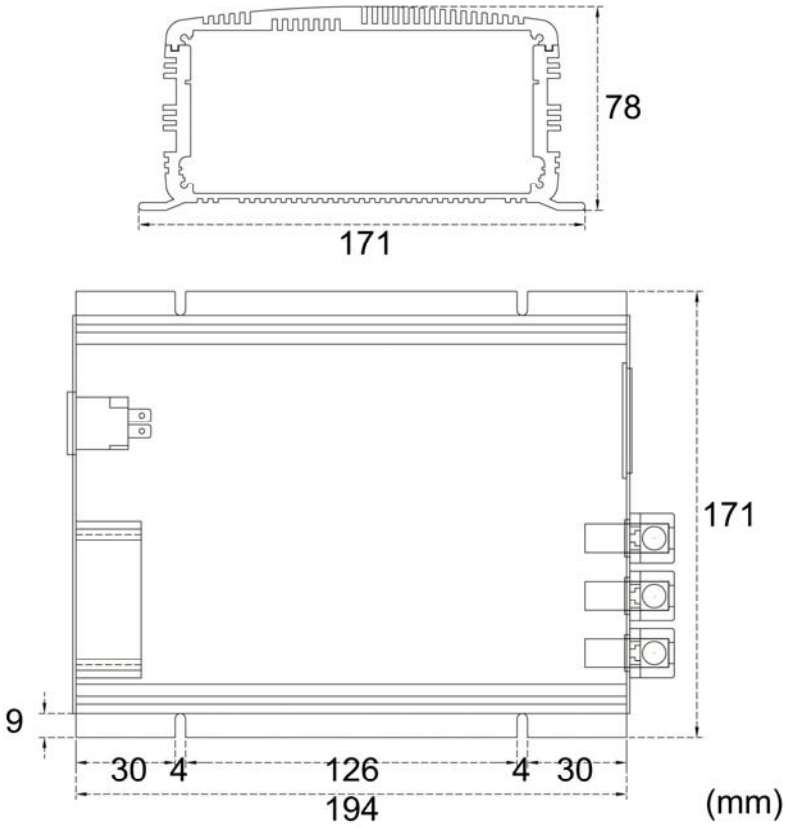

- **PM-DBC-3012D, PM-DBC-1724D, PM-DBC-1136D, PM-DBC-0848D**

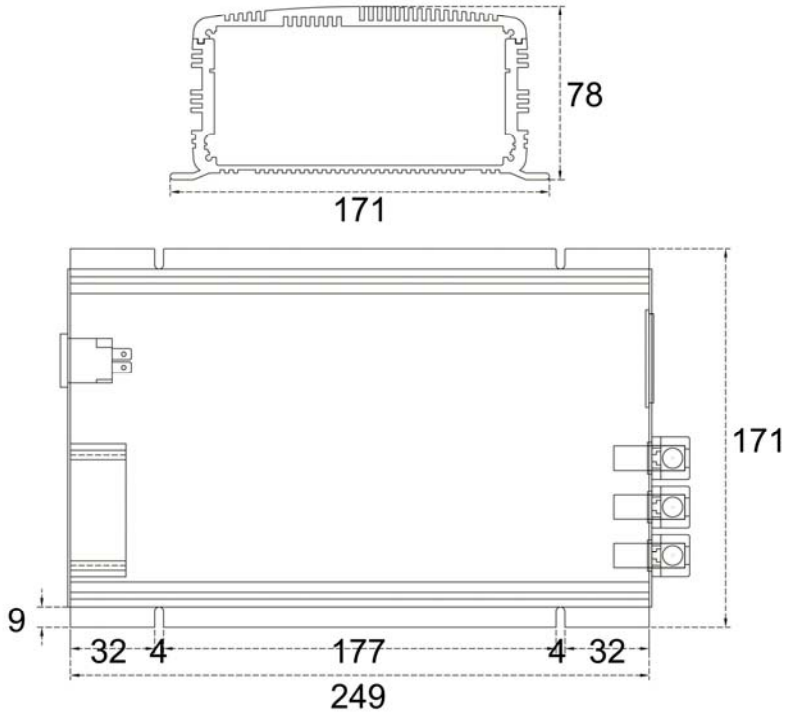

- **PM-DBC-4512D, PM-DBC-2324D, PM-DBC-1536D, PM-DBC-1148D**

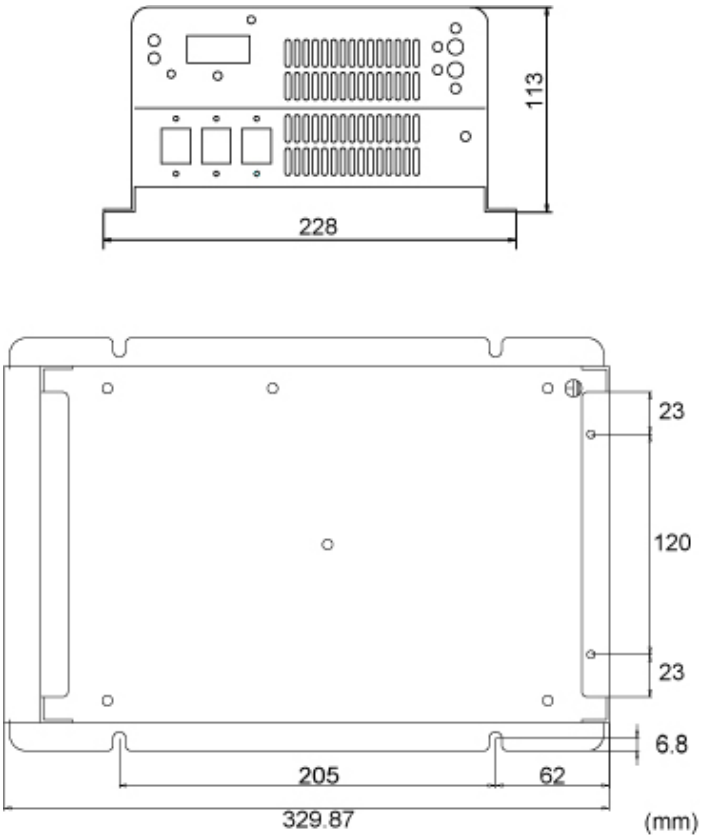

- **PM-DBC-9012D, PM-DBC-4524D, PM-DBC-3036D, PM-DBC-2248D**

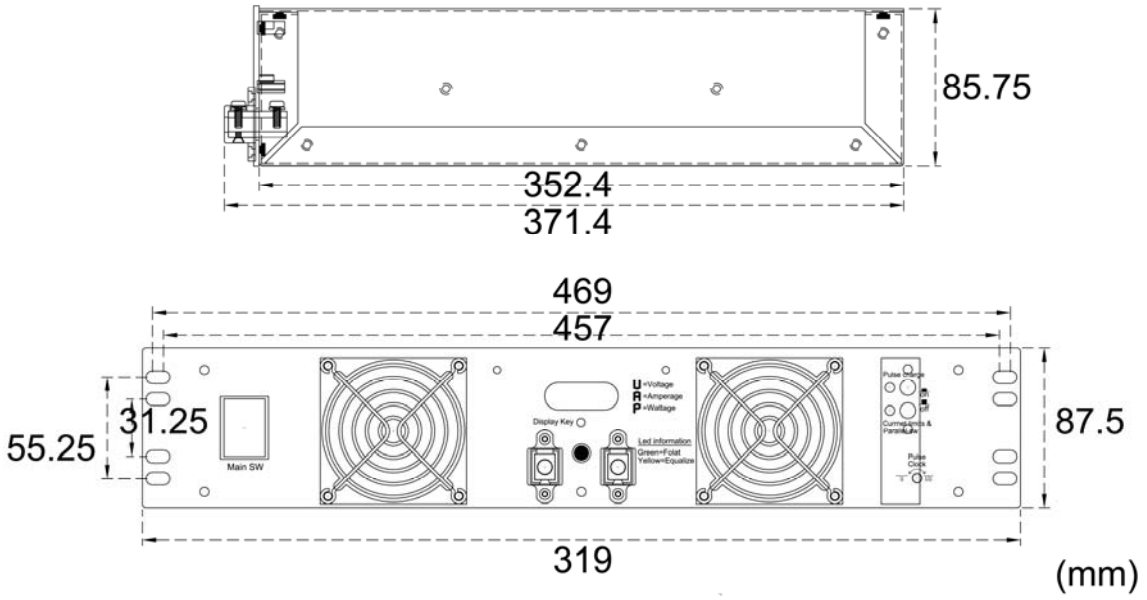

CHARGING CURVE LED INDICATION

Multi-stage charging ensures batteries receive optimum charging with minimal wear and tear, at the same time regulates the voltage and current delivered to the batteries in three stages automatically. **Automatic multi-rate charging function "Pre-charge, equalizer charge and floating charge".**

- **3 LED Display: Red (power), Green (floating charge), Orange (equalizer charge)**

Pre-charge Diagram

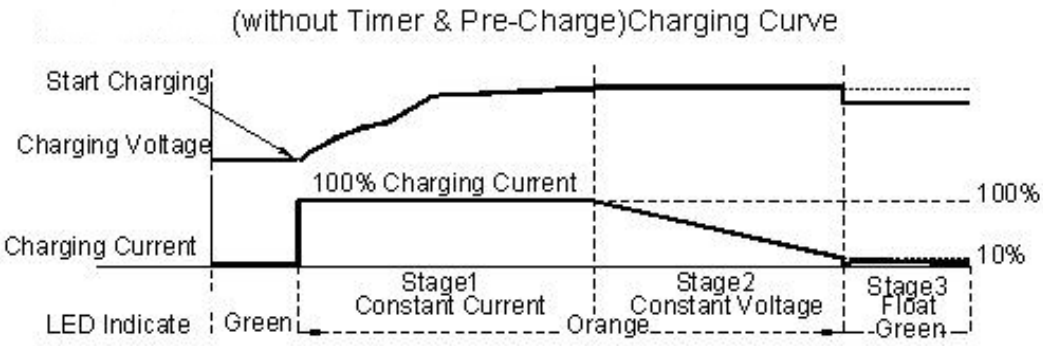

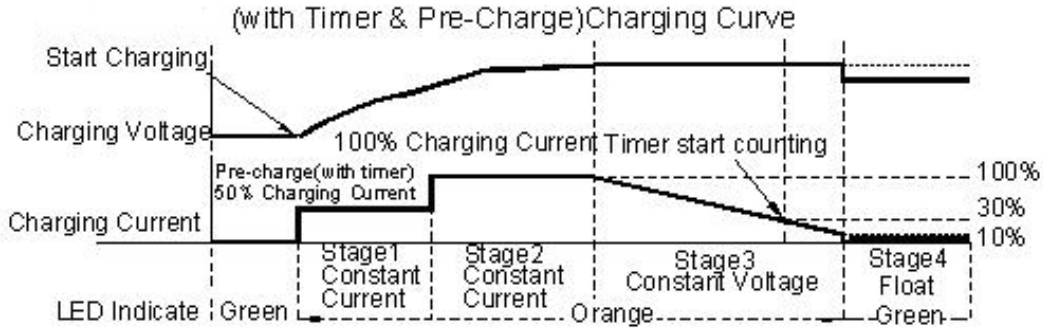

DBC battery chargers with pre-charge functions include:

12Vdc: 10A~30Amp 24Vdc: 7A~17Amp 36Vdc: 4A~11Amp 48Vdc: 3A~8Amp

Pulse Charge Diagram (At beginning)

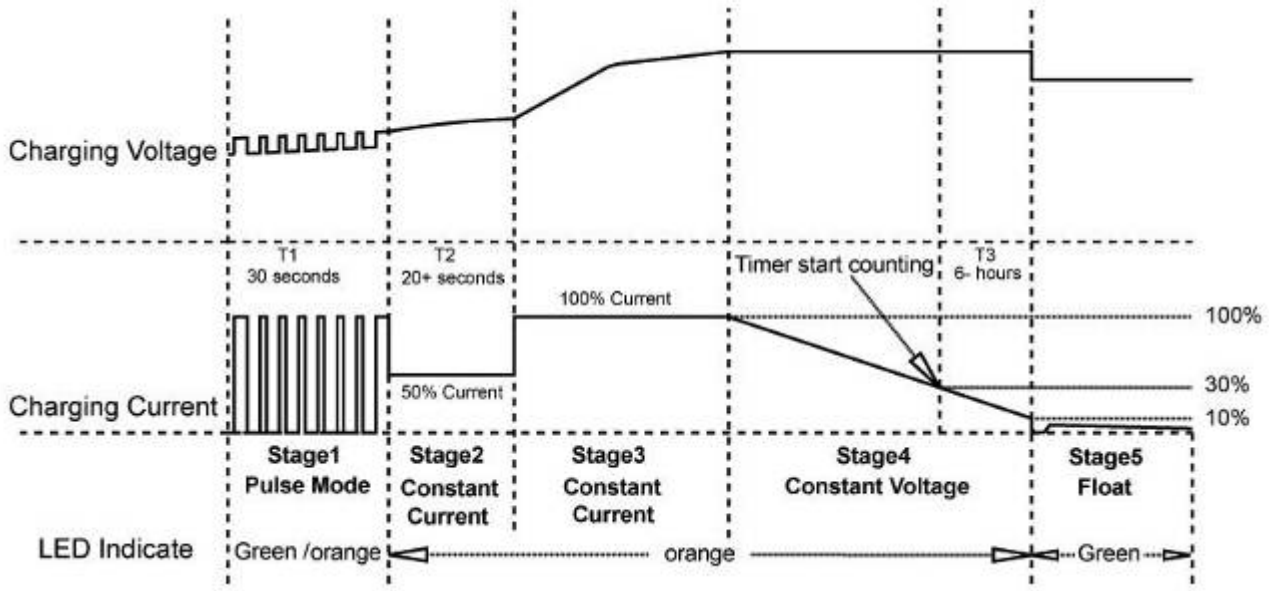

Pulse charge at beginning is used to reviving battery when there are many formations of crystals inside the battery and making the batteries unable to be fully recharged. The constant currents charging will knock the crystals into smaller pieces and bring the battery back to life.

For the following models, this function can be added upon request:

12Vdc: 10A~30Amp 24Vdc: 7A~17Amp

Pulse Charge Diagram (At end)

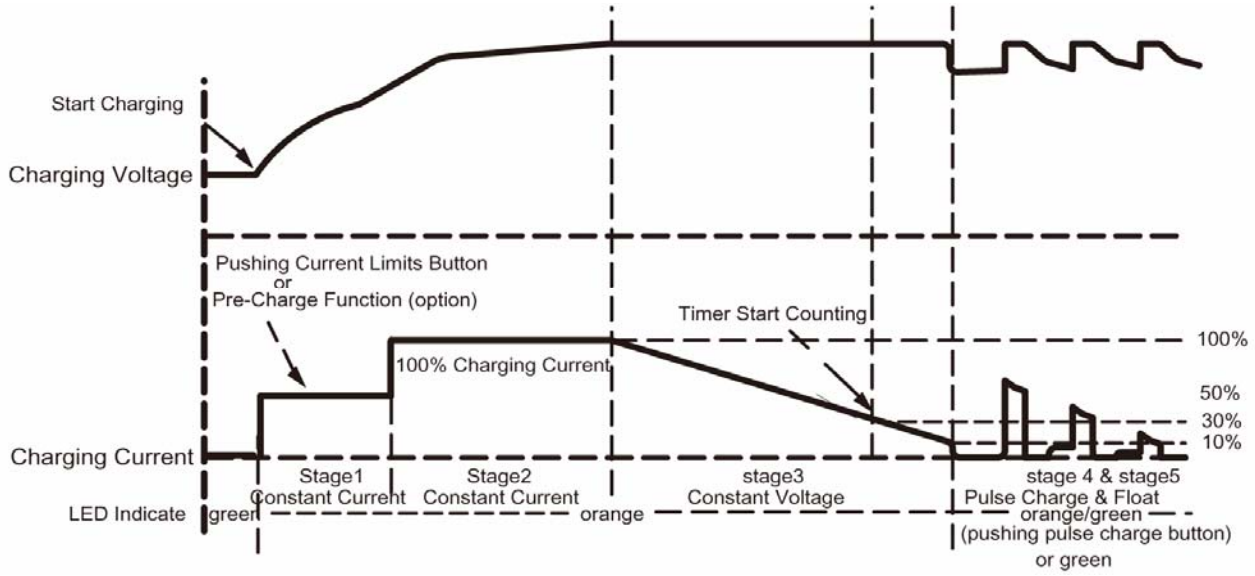

Pulse Charge at end is to fully charge the battery when it is unable to achieve by float charge. Through this step, the charging efficiency will increase and temperature rises slower during charging process.

This function is available with models 45Amp(12Vdc), 23Amp(24Vdc), 15Amp(36Vdc), 11Amp(48Vdc) and above only.

BATTERY CHARGING INSTRUCTION

A spark near the battery may cause an explosion. Follow instructions carefully to reduce the risk of spark near the battery.

1. Connect the charger system to a wall receptacle strongly.
2. Connect the alligator clips to battery terminals (red clip--->positive terminal; black clip--->negative terminal) For dual output connection, Battery NEG- port is shared for two sets of battery cables
3. Position the AC and DC cords to reduce the risk of damage by a hood, door, or moving engine part.
4. Turn on the power switch which is located on the front panel/back panel of charger, then the red LED lits and bi-color LED will confirm the charger's stage.
5. Do not face the battery when making the connection.
6. Once the battery is fully charged, disconnect the AC cord, remove the clip from the electrical items and then remove the clip from the battery terminal.
7. The battery maybe damaged if charging status LED cannot change to green after long time charge.
8. The battery charger was designed by aluminum housing with good thermal dissipation. However, avoid touching the case for safety purpose because the temperature may reach to about 50 degree C on the case when charging.
9. After using battery for certain period of time, the increase of battery impedance will make the charger unable to identify whether the battery is fully charged. In this case, the charger will continue charging the battery with equalizer charge, which may cause over charge and reduce the lifespan of battery. To prevent this from happening, whenever charging new batteries, it is recommended to record the perfect charging time from “Charging End Time Setting.”

CAUTION: Keep the charger in a well ventilated, cool and open area. Do not block the vent holes on the sides or the discharge openings of the cooling fan.

SPECIFICATION

Model		PM-DBC -0212F	PM-DBC -0612F	PM-DBC -1012DF	PM-DBC -2012D	PM-DBC -2512D	PM-DBC -3012D	PM-DBC -4512D	PM-DBC -9012D
OUTPUT	Voltage	**12V**							
	Current	**2A**	**6A**	**10A**	**20A**	**25A**	**30A**	**45A**	**90A**
	Equalizer Charge	**14.4V +/- 0.1V**					**14.4V +/- 0.2V**	**14.4V +/- 0.1V**	
	Float Charge	**13.6V +/- 0.1V**					**13.6V +/- 0.2V**	**13.6V +/- 0.1V**	
	Efficiency	**> 87% (at full load)**							
INPUT	Voltage	**110V or 220V (110V & 220V: 0212F, 0612F, 1012DF)**							
	Frequency	**47~63HZ**							
PROTECTION	Battery Reverse	**Yes**							
	Short Circuit	**Yes**							
	Overload	**Yes**							
	Temperature	**Yes, when degree around 65°C~75°C, it will stop charging (except for 0212F, 0612F)**							
	Cooling fan	Fans are controlled by floating voltage. (Fans are controlled by temperature (45 °C) for 0212F, 0612F)							
INDICATORS	LED	3 LED Display: Red (power), green (floating charge), orange (equalizer charge)							
	LCD	**YES (except for 0212F, 0612F)**							
	Current Meter	**YES (except for 0212F, 0612F)**							
MECHANICAL	Dimensions (mm)	51*81*152	51*81*152	54*114*172	65*131*192	79*170*196	79*170*251	110*229*335	85*356*479
	Weight (KGS)	0.8	0.8	1.0	1.5	2.0	2.5	4.1	8.5
O/P Wires or Terminal		**2A~25A: Microphone Connector or Alligator Clips ; Other models: Terminal**							

SPECIFICATION

Model		PM-DBC -0124F	PM-DBC -0424F	PM-DBC -0724DF	PM-DBC -1224D	PM-DBC -1424D	PM-DBC -1724D	PM-DBC -2324D	PM-DBC -4524D
OUTPUT	Voltage	**24V**							
	Current	**1A**	**4A**	**7A**	**12A**	**14A**	**17A**	**23A**	**45A**
	Equalizer Charge	**28.8 +/- 0.2V**							**28.8 +/- 0.1V**
	Float Charge	**27.2 +/- 0.2V**							**27.2 +/- 0.1V**
	Efficiency	**> 87% (at full load)**							
INPUT	Voltage	**110V or 220V (110V & 220V: 0124F, 0424F, 0724DF)**							
	Frequency	**47~63HZ**							
PROTECTION	Battery Reverse	**Yes**							
	Short Circuit	**Yes**							
	Overload	**Yes**							
	Temperature	**Yes, when degree around 65°C~75°C, it will stop charging (except for 0124F, 0424F)**							
	Cooling fan	Fans are controlled by floating voltage. (Fans are controlled by temperature (45 °C) for 0124F, 0424F)							
INDICATORS	LED	3 LED Display: Red (power), green (floating charge), orange (equalizer charge)							
	LCD	**YES (except for 0124F, 0424F)**							
	Current Meter	**YES (except for 0124F, 0424F)**							
MECHANICAL	Dimensions (mm)	51*81*152	51*81*152	54*114*172	79*170*196	79*170*196	79*170*251	N/A	N/A
	Weight (KGS)	0.8	0.8	1.0	2.0	2.0	2.5	N/A	N/A
O/P Wires or Terminal		**1A~12A: Microphone Connector or Alligator Clips ; Other models: Terminal**							

SPECIFICATION

Model		PM-DBC-0436DF	PM-DBC-0836D	PM-DBC-0936D	PM-DBC-1136D	PM-DBC-1536D	PM-DBC-3036D
OUTPUT	Voltage	**36V**					
	Current	**4A**	**8A**	**9A**	**11A**	**15A**	**30A**
	Equalizer Charge	**43.2V +/- 0.1V**			**43.2V +/- 0.2V**	**43.2V +/- 0.1V**	
	Float Charge	**40.8V +/- 0.1V**			**40.8V +/- 0.2V**	**40.8V +/- 0.1V**	
	Efficiency	**> 87% (at full load)**					
INPUT	Voltage	**110V & 220V**	**110V or 220V**				
	Frequency	**47~63HZ**					
PROTECTION	Battery Reverse	**Yes**					
	Short Circuit	**Yes**					
	Overload	**Yes**					
	Temperature	**Yes**					
	Cooling fan	Fans are controlled by floating voltage.					
INDICATORS	LED	3 LED Display: Red (power), green (floating charge), orange (equalizer charge)					
	LCD	**YES**					
	Current Meter	**YES**					
MECHANICAL	Dimensions (mm)	54*114*172	65*131*192	79*170*196	79*170*251	48.5*51*22	85*356*479
	Weight (KGS)	1.0	1.5	2.0	2.5	9.6	8.5
O/P Wires or Terminal		**4A~9A: Microphone Connector or Alligator Clips ; Other models: Terminal**					

SPECIFICATION

Model		PM-DBC-0348DF	PM-DBC-0648F	PM-DBC-0748DF	PM-DBC-0848D	PM-DBC-1148D	PM-DBC-2248D
OUTPUT	Voltage	**48V**					
	Current	**3A**	**6A**	**7A**	**8A**	**11A**	**22A**
	Equalizer Charge	**57.6 +/- 0.1V**			**57.6 +/- 0.2V**	**57.6 +/- 0.1V**	
	Float Charge	**54.4 +/- 0.1V**			**54.4 +/- 0.2V**	**54.4 +/- 0.1V**	
	Efficiency	**> 87% (at full load)**					
INPUT	Voltage	**110V & 220V**	**110V or 220V**				
	Frequency	**47~63HZ**					
PROTECTION	Battery Reverse	**Yes**					
	Short Circuit	**Yes**					
	Overload	**Yes**					
	Temperature	**Yes**					
	Cooling fan	Fans are controlled by floating voltage.					
INDICATORS	LED	3 LED Display: Red (power), green (floating charge), orange (equalizer charge)					
	LCD	**YES**					
	Current Meter	**YES**					
MECHANICAL	Dimensions (mm)	54*114*172	65*131*192	79*170*196	79*170*251	48.5*51*22	85*356*479
	Weight (KGS)	1.0	1.5	2.0	2.5	9.6	8.5
O/P Wires or Terminal		**3A~7A: Microphone Connector or Alligator Clips ; Other models: Terminal**					

Power Master Technology Co., Ltd.

8F, No.651-3, Chung Cheng Rd.,

Hsinchuang Dist., New Taipei City 24257,

Taiwan (R.O.C.)

Tel: 886-2-6626-6660 Fax: 886-2-6626-6800

Email: sales@powermaster.com.tw

Website: www.powermaster.com.tw