Instructions for use

DISHWASHER

GB

English, 1

FDYF 11011 STYLE

Contents

Product Fiche, 2

Precautions and safety advice, 3-4
General safety
Disposal of old electrical appliances
Saving energy and respecting the environment
Recycling & Disposal Information

Installation, 5-6-7
Positioning and levelling
Connecting the electricity and water supplies
Technical data
Advice regarding the first wash cycle

Description of the appliance, 8
Overall view
Control panel

Loading the racks, 9-10
Lower rack
Upper rack
Adjusting the upper rack
Unsuitable crockery
Damage to glass and crockery

Start-up and use, 11
Starting the dishwasher
Measuring out the detergent

Wash cycles, 12
Table of wash cycles

Special wash cycles and options, 13

Rinse aid and refined salt, 14
Measuring out the rinse aid
Setting water hardness
Measuring out the refined salt

Care and maintenance, 15
Cutting off the water and electricity supplies
Cleaning the dishwasher
Preventing unpleasant odours
Cleaning the sprayer arms
Cleaning the water inlet filter
Cleaning the filters
Leaving the machine unused for extended periods

Troubleshooting, 16

After-Sales Service, 17

Guarantee, 18

Hotpoint

Product Fiche

GB

Product Fiche	
Brand	**HOTPOINT**
Model	**FDYF 11011**
Rated capacity in standard place settings (1)	13
Energy efficiency class on a scale from A+++ (low consumption) to D (high consumption)	A+
Energy consumption per year in kWh (2)	295.0
Energy consumption of the standard cleaning cycle in kWh	1.04
Power consumption of the off-mode in W	0.5
Power consumption of the left-on mode in W	5.0
Water consumption per year in litres (3)	3080.0
Drying efficacy class on a scale from G (low efficacy) to A (high efficacy)	A
Programme time for standard cleaning cycle in minutes	190’
The duration of the left-on mode in minutes	10
Noise in dB(A) Re 1pW	49
Built-in model	No

NOTES

1) The information on the label and fiche relates to the standard cleaning cycle, this programme is suitable to clean normally soiled tableware and it is the most efficient programme in terms of combined energy and water consumption. The standard cleaning cycle corresponds to the Eco cycle.

2) Based on 280 standard cleaning cycles using cold water fill and the consumption of the low power modes. Actual energy consumption depends on how the appliance is used.

3) Based on 280 standard cleaning cycles. Actual water consumption depends on how the appliance is used.

Precautions and safety advice

Hotpoint

GB

⚠ The appliance was designed and manufactured in compliance with current international safety standards. The following information has been provided for safety reasons and should therefore be read carefully.

Keep this instruction manual in a safe place for future reference. If the appliance is sold, given away or moved, please ensure the manual is kept with the machine, so that the new owner may benefit from the advice contained within it.

Please read this instruction manual carefully: it contains important information regarding the safe installation, use and maintenance of the appliance.

This appliance is intended to be used in household and similar applications such as:
- staff kitchen areas in shops, offices and other working environments;
- farm houses;
- by clients in hotels, motels and other residential type environments;
- bed and breakfast type environments.

General safety

- This appliance is not intended for use by persons (including children) with reduced physical, sensory or mental capabilities, or lack of experience and knowledge, unless they have been given supervision or instruction concerning use of the appliance by a person responsible for their safety.
- Children should be supervised to ensure that they do not play with the appliance.
- The appliance was designed for domestic use inside the home and is not intended for commercial or industrial use.
- The appliance must be used by adults only, to wash domestic crockery according to the instructions in this manual.
- The appliance must not be installed outdoors, even in covered areas. It is extremely dangerous to leave the machine exposed to rain and storms.
- Do not touch the appliance when barefoot.
- When unplugging the appliance always pull the plug from the mains socket, do not pull on the cable.
- The water supply tap must be shut off and the plug should be removed from the electrical socket before cleaning the appliance or carrying out any maintenance work.
- If the appliance breaks down, do not under any circumstances touch the internal parts in an attempt to carry out the repair work yourself.
- Do not lean or sit on the open door of the appliance: this may cause the appliance to overturn.
- The door should not be left open as it may create a dangerous obstacle.
- The packaging material should not be used as a toy: it can become a choking or suffocation hazard.

If your family includes children:
• DO NOT allow children to play with the appliance or tamper with its controls.
• Keep detergents and rinse aids away from children.
• Keep children away from the open door of a dishwasher, there could still be some detergent left inside.

Disposal of old electrical appliances

The European Directive 2012/19/EU on Waste Electrical and Electronic Equipment (WEEE), requires that old household electrical appliances must not be disposed of in the normal unsorted municipal waste stream. Old appliances must be collected separately in order to optimise the recovery and recycling of the materials they contain and reduce the impact on human health and the environment. The crossed out “wheeled bin” symbol on the product reminds you of your obligation, that when you dispose of the appliance it must be separately collected.

Consumers should contact their local authority or retailer for information concerning the correct disposal of their old appliance.

Saving energy and respecting the environment

Saving water and energy

- Only start a wash cycle when the dishwasher is full. While waiting for the dishwasher to be filled, prevent unpleasant odours with the Soak cycle (see Wash Cycles).
- Select a wash cycle that is suited to the type of crockery and to the soil level of the crockery using the Wash cycle table:
  - for dishes with a normal soil level, use the Eco wash cycle, which guarantees low energy and water consumption levels.
  - if the load is smaller than usual activate the Half load* option (see Start-up and use).
- If your electricity supply contract gives details of electricity saving time bands, run wash cycles during the periods when a lower tariff is applied. The Delayed start* button (see Start-up and use) helps you organise the wash cycles accordingly.

Phosphate-free and chlorine-free detergents containing enzymes

- We strongly recommend that you use detergents that do not contain phosphates or chlorine, as these products are harmful to the environment.

- Enzymes provide a particularly effective action at temperatures around 50°C, and as a result detergents containing enzymes can be used in conjunction with low-temperature wash cycles in order to achieve the same results as a normal 65°C wash cycle.
- To avoid wasting detergent, use the product in appropriate quantities based on the manufacturer's recommendations, the hardness of the water and the soil level and quantity of the crockery. Even if they are biodegradable, detergents contain substances that may alter the balance of nature.

Recycling & Disposal Information

As part of Hotpoint's continued commitment to helping the environment, Hotpoint reserves the right to use quality recycled components to keep down customer costs and minimise material wastage.

Please dispose of packaging and old appliances carefully.
To minimise risk of injury to children, remove the door, plug and cut mains cable off flush with the appliance. Dispose of these parts separately to ensure that the appliance can no longer be plugged into a mains socket and the door cannot be locked shut.

* Only available in selected models.

Installation

Hotpoint

GB

⚠ If the appliance must be moved at any time, keep it in an upright position; if absolutely necessary, it may be tilted onto its back.

Positioning and levelling

1. Remove the appliance from all packaging and check that it has not been damaged during transportation.
If it has been damaged, contact the retailer and do not proceed any further with the installation process.

2. Check the dishwasher by placing it so that its sides or back panel are in contact with the adjacent cabinets or even with the wall. This appliance can also be recessed under a single worktop* *(see the Assembly instruction sheet).*

3. Position the dishwasher on a level and sturdy floor. If the floor is uneven, the front feet of the appliance may be adjusted until it reaches a horizontal position. If the appliance is levelled correctly, it will be more stable and much less likely to move or cause vibrations and noise while it is operating.

4*. Adjust the height of the rear foot from the front of the appliance on the central lower part of the dishwasher, turning a hexagonal spanner (red color) with an opening of 8 mm in a clockwise direction to increase the height or in an anticlockwise direction to decrease the height.

⚠ The dishwasher meets the requirements set out by the regulations in force concerning safety and electrical equipment.

⚠ Any technical checks should be conducted exclusively by a trained and authorised technician: Repairs carried out by unaithorised persons will invalidate the guarantee, as well as posing a potential hazard to the user.

⚠ The manufacturer declines all responsibility for damage to persons or property resulting from failure to observe the above precautions, from tampering with even a single component or from the use of non-original spare parts.

Electrical Connection

Before inserting the plug into the electrical socket, make sure that:

- the socket is earthed and complies with current regulations;
- the socket can withstand the maximum load of the appliance, which is indicated on the data plate located on the inside of the door *(see Description of the appliance);*
- the power supply voltage falls within the values indicated on the data plate on the inside of the door;
- the socket is compatible with the plug of the appliance. If this is not the case, ask an authorised technician to replace the plug *(see After Sales Service)*; do not use extension cables or multiple sockets.

⚠ Once the appliance has been installed, the power supply cable and the electrical socket should be easily accessible.

⚠ The cable should not be bent or compressed.

⚠ If the power supply cable is damaged, it must be replaced by the manufacturer or its Technical Assistance Service in order to prevent all potential hazards. *(See After Sales Service)*

This appliance must be earthed.

Fuses:your appliance comes fitted with a plug and a 13A fuse. If you need to replace the fuse, only those rated at 13A and ASTA approved to BS1362 should be used. If you lose the fuse cover, a replacement may be obtained from your local authorised Service Centre or Electrical company. Correct replacement is identified by colour coding or the marking on base of plug.
DO NOT use the plug unless the fuse cover is fitted.

Changing the Plug

⚠ Cut off and dispose of the supplied plug if it does not fit your socket.

To avoid a shock hazard DO NOT insert the discarded plug into a socket anywhere else.

⚠ Wires in the mains lead are coloured accordance with the following code:

Green/Yellow	-	Earth
Blue	-	Neutral
Brown	-	Live

If you change the plug, the colour of the wires in the mains lead may not correspond with the terminal markings in the plug, which if not coloured, could be:

EARTH 'E' or	⏚
NEUTRAL	'N'
LIVE	'L'

Changing the Mains Lead

A lead can be ordered from Hotpoint Service
UK: 08709 066 066 or
Republic of Ireland: 1850 302 220
- If you have damaged the existing lead or require a longer one a charge will be made. It is strongly advised that this work is carried out by a qualified electrician.
- If the domestic wiring includes a residual current-operated circuit breaker, ensure that it conforms to the latest regulations.

The dishwasher must not be connected to the electricity supply while installation is being carried out.
- This appliance should only be connected to a 230/240V AC source, via a properly installed earthed socket.
- Use the dishwasher solely in a domestic environment.
- DO NOT stand or place heavy objects on the door when it is open, this could damage the door or cause the appliance to tip forward.

GB

⚠ The Company shall not be held responsible for any incidents that occur if these regulations are not observed.

Anti-condensation strip*

After installing the dishwasher, open the door and stick the adhesive transparent strip under the wooden shelf in order to protect it from any condensation which may form.

Technical data	
Dimensions	width 60 cm height 85 cm depth 60 cm
Capacity	13 standard place-settings
Water supply pressure	0,05 ÷ 1MPa (0.5 ÷ 10 bar) 7,25 – 145 psi
Power supply voltage	See appliance data plate
Total absorbed power	See appliance data plate
Fuse	See appliance data plate
CE	This dishwasher conforms to the following European Community Directives: -2006/95/EC (Low Voltage) -2004/108/EC (Electromagnetic Compatibility) -2009/125/EC (Comm. Reg. 1016/2010) (Ecodesign) -97/17/EC (Labelling) -2012/19/EU Waste Electrical and Electronic Equipment (WEEE)

Connecting the water supplies

⚠ Connection to the water and electricity supplies should only be performed by a qualified technician.

⚠ The dishwasher should not stand on top of the water hoses or the electricity supply cable.

Connecting the water inlet hose

The water inlet and outlet hoses and the electricity supply cable may be positioned towards the right or the left in order to achieve the best possible installation.

- To a suitable cold water connection point: before attaching the hose, run the water until it is perfectly clear so that any impurities that may be present in the water do not clog the appliance; after performing this operation, screw the inlet hose tightly onto a tap with a ¾ gas threaded connection.

- To a suitable hot water connection point: your dishwasher may be provided with hot water from the mains supply (if you have a central heating system with radiators) provided that it does not exceed a temperature of 60°C.
  Screw the hose to the tap as described for connection to a cold water supply.

⚠ If the inlet hose is not long enough, contact a specialist store or an authorised technician *(see Assistance)*.

⚠ The water pressure must be within the values indicated in the Technical data table *(see Installation).*

⚠ The hose should not be bent or compressed.

⚠ The appliance must be connected to the water supply network using new hoses.
Do not use old hoses.
Ensure that the new hose supplied is connected and the old hose is disposed of safely.

⚠ DO NOT overtighten the hose connector, hand tight is sufficient.

⚠ Ensure the fill hose is not kinked.

⚠ Tap connections*: A range of adaptors are available to suit your tap.

⚠ DO NOT connect the dishwasher to a single outlet instantaneous water heater or an electric heater.

Sink Waste System

Connect the outlet hose (without bending it) to a drain duct with a minimum diameter of 32 mm.

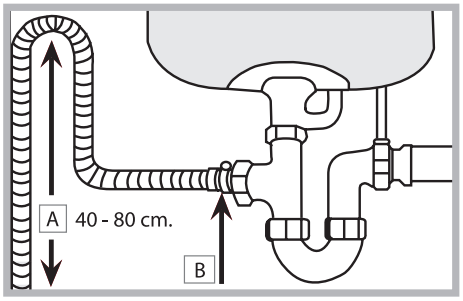

The outlet hose must be at a height ranging from 40 to 80 cm (from 15'' to 31'') from the floor/surface where the dishwasher rests (A).

- before connecting the drain hose, remove any internal restrictions; this will prevent a build up of debris which could cause a blockage
- remove any restrictions from the waste spigot and ensure that the sealing bung is removed (B).

⚠ It MUST NOT be connected to a surface water drain.

- Untie the end of the GREY drainage hose from the rear of the appliance.

- If fitting an under sink waste disposal unit, cut out the membrane, bung or blanking plug.

* Only available in selected models.

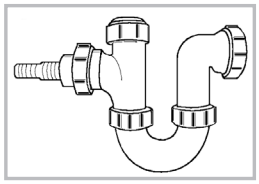

⚠ Ensure the drain hose is securely attached, to prevent it coming away while the machine is in use and causing a flood.

⚠ Fit hose to waste securely using a “Jubilee” type clip.

Anti-flooding protection*

To ensure floods do not occur, the dishwasher:
- is provided with a special system which blocks the water supply in the event of anomalies or leaks from inside the appliance.

Some models are also equipped with the supplementary safety device **New Acqua Stop***, which guarantees anti-flooding protection even in the event of a supply hose rupture.

WARNING: HAZARDOUS VOLTAGE!

Under no circumstance should the water inlet hose be cut as it contains live electrical parts.

The Company shall not be held responsible for any incidents that occur if these regulations are not observed.

Advice regarding the first wash cycle

After the installation, remove the stoppers from the racks and the retaining elastic elements from the upper rack, if any.
Immediately before the first washing, completely fill the salt dispenser with water and add only then approximately 1 kg of salt (see chapter entitled Rinse aid and refined salt). The water may overflow: this is normal and is not a cause for concern. Select the water hardness value (see chapter entitled Rinse aid and refined salt). - After the salt has been poured into the machine, the LOW SALT indicator light* switches off.

⚠ If the salt dispenser is not filled, the water softener and the heating element may get damaged as a result.

The machine has a buzzer/set of tones *(depending on the dishwasher model)* **to inform the user that a command has been implemented: power on, cycle end etc.**

The symbols/indicator lights/LEDs on the control panel/ display may vary in colour and may have a flashing or fixed light *(depending on the dishwasher model)*.

The display* provides useful information concerning the type of wash cycle, wash cycle phase, remaining time, temperature etc.

* Only available in selected models.

Description of the appliance

GB

Overall view

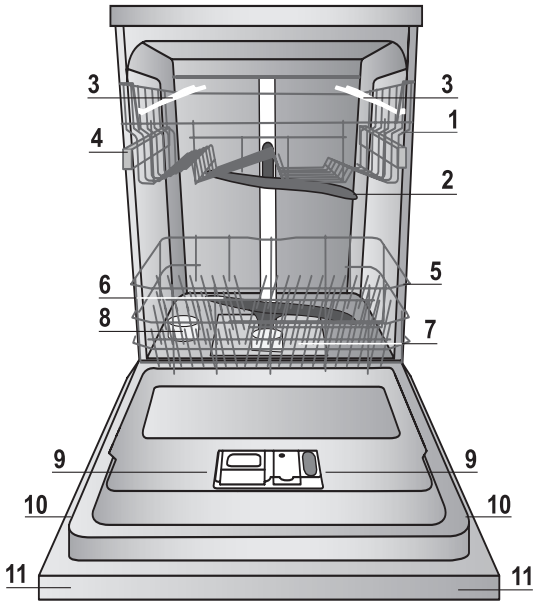

1. Upper rack
2. Upper sprayer arm
3. Tip-up dispensers
4. Rack height adjuster
5. Lower rack
6. Lower sprayer arm
7. Washing filter
8. Salt dispenser
9. Detergent dispenser, rinse-aid dispenser and Active Oxygen device*
10. Data plate
11. Control panel***

Control panel

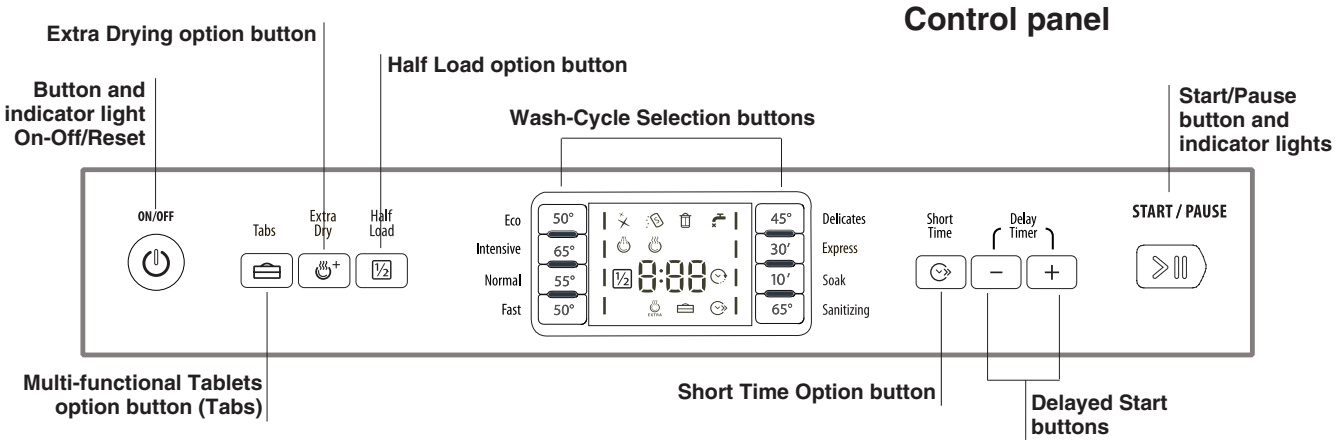

Display

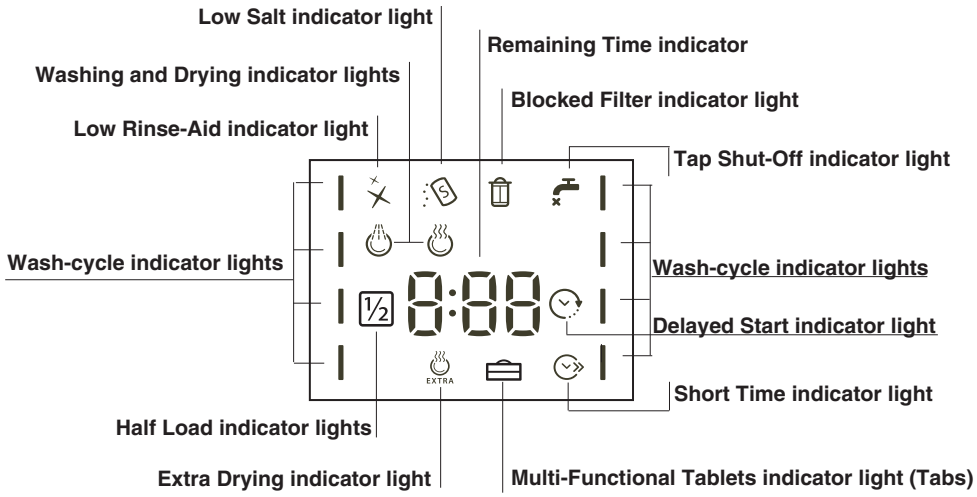

*** Only in completely built-in models * Only available in selected models.

The number and type of wash cycles and options may vary depending on the dishwasher model.

Loading the racks

Hotpoint

GB

Tips

Before loading the racks, remove all food residues from the crockery and empty liquids from glasses and containers. **No preventive rinsing is needed under running water.**

Arrange the crockery so that it is held in place firmly and does not tip over; and arrange the containers with the openings facing downwards and the concave/convex parts placed obliquely, thus allowing the water to reach every surface and flow freely.

Make sure that the lids, handles, trays and frying pans do not prevent the sprayer arms from rotating. Place any small items in the cutlery basket.

Since plastic dishes and non-stick frying pans usually retain more water drops, their drying will be not so good as that of ceramic or stainless-steel dishes.

Lightweight items such as plastic containers should be placed in the upper rack and arranged so that they cannot move.

After loading the appliance, make sure that the sprayer arms can rotate freely.

Lower rack

The lower rack can hold pans, lids, dishes, salad bowls, cutlery etc. Large plates and lids should ideally be placed at the sides.

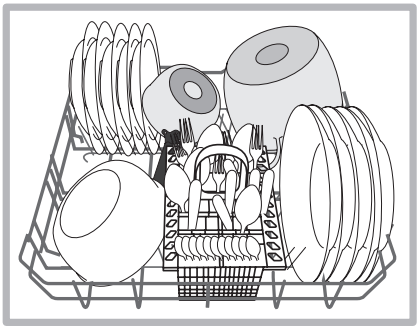

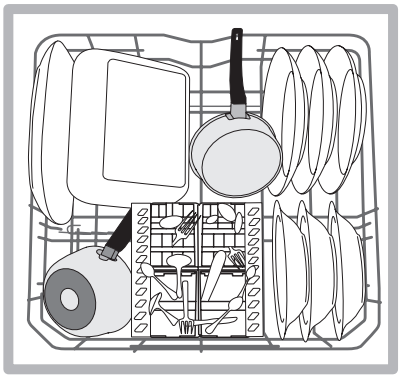

Very soiled dishes and pans should be placed in the lower rack because in this sector the water sprays are stronger and allow a higher washing performance.

*Only available in selected models with different numbers and positions.

Several dishwasher models are fitted with tip-up sectors*. They can be used in a vertical position when arranging dishes or in a horizontal position (lower) to load pans and salad bowls easily.

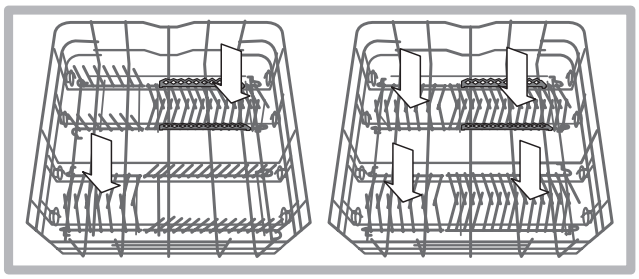

Cutlery basket

The modular basket can slide to optimise the space inside the lower rack. It is equipped with top grilles for improved cutlery arrangement.

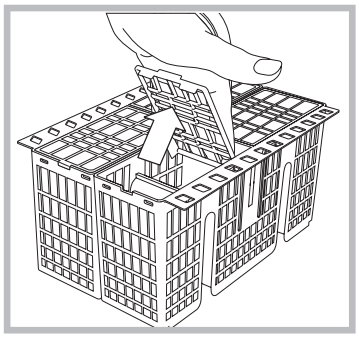

⚠ Knives and other utensils with sharp edges must be placed in the cutlery basket with the points facing downwards or they must be positioned horizontally in the tip-up compartments on the upper rack

Upper rack

Load this rack with delicate and lightweight crockery such as glasses, cups, saucers and shallow salad bowls.

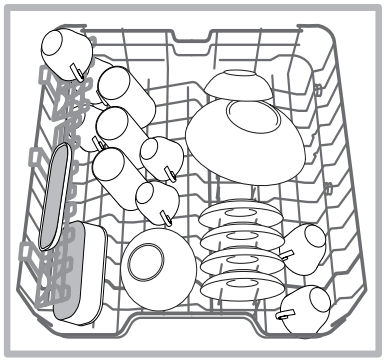

Several dishwasher models are fitted with tip-up sectors*. They can be used in a vertical position when arranging tea/dessert saucers or in a lower position to load bowls and food containers.

Tip-up compartments with adjustable position

The side tip-up compartments can be positioned at three different heights to optimize the arrangement of crockery inside the rack.
Wine glasses can be placed safely in the tip-up compartments by inserting the stem of each glass into the corresponding slots.

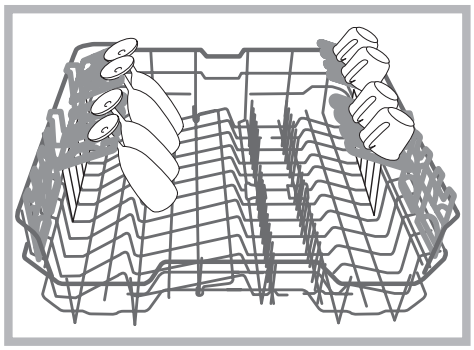

Cutlery tray*

Some dishwasher models are fitted with a sliding tray which can be used to hold serving utensils or small cups. For optimum washing performance avoid positioning bulky crockery directly below the tray. The cutlery tray can be removed *(see Figure).*

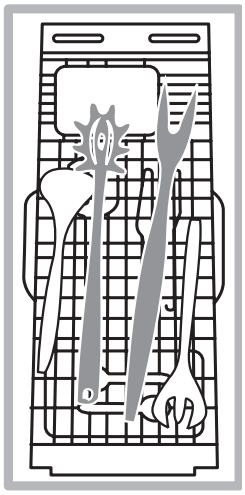

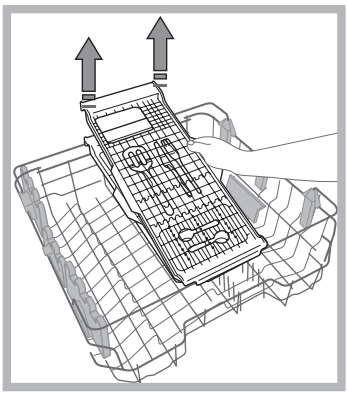

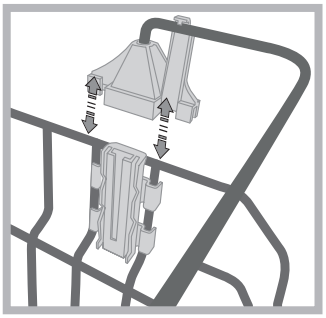

Before loading the tray, make sure the supports are properly coupled to the upper rack *(see Figure).*

The upper rack can be adjusted for height based on requirements: high position to place bulky crockery in the lower rack and low position to make the most of the tip-up compartments/sectors by creating more space upwards.

Adjusting the height of the upper rack

In order to make it easier to arrange the crockery, the upper rack may be moved to a higher or lower position.
The height of the upper rack should be adjusted WHEN THE RACK IS EMPTY.
NEVER raise or lower the rack on one side only.

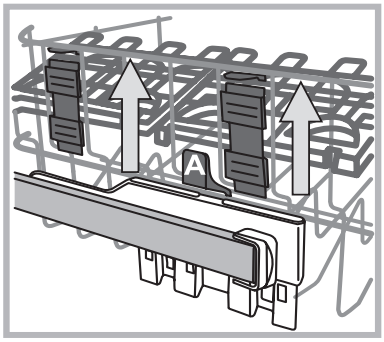

If the rack is equipped with a **Lift-Up** device* *(see figure)*, lift it up by holding its sides. To restore the lower position, press the levers (**A**) at the sides of the rack and follow the rack down.

Unsuitable crockery

- Wooden crockery and cutlery.
- Delicate decorated glasses, artistic handicraft and antique crockery. Their decorations are not resistant.
- Parts in synthetic material which do not withstand high temperatures.
- Copper and tin crockery.
- Crockery soiled with ash, wax, lubricating grease or ink.

The colours of glass decorations and aluminium/silver pieces can change and fade during the washing process. Some types of glass (e.g. crystal objects) can become opaque after a number of wash cycles too.

Damage to glass and crockery

Caused by:
- Type of glass and glass production process.
- Chemical composition of detergent.
- Water temperature of rinse cycle.

Tips:
- Only use glasses and porcelain guaranteed by the manufacturer as dishwasher safe.
- Use a delicate detergent suitable for crockery.
- Collect glasses and cutlery from the dishwasher as soon as the wash cycle is over.

Hotpoint

GB

Starting the dishwasher

1. Turn the water tap on.
2. Press the ON/OFF button: The ON/OFF indicator light and the display light up.
3. Open the door and pour in a suitable amount of detergent *(see below).*
4. Load the racks *(see Loading the racks)* and shut the door.
5. Select the wash cycle in accordance with the type of crockery and its soil level *(see Table of wash cycles)* by pressing the wash-cycle selection buttons.
6. Select the wash options* *(see adjacent information).*
7. Start the cycle by pressing the Start/Pause button: The wash indicator light comes on and the time left to the end of the cycle appears on the display.
8. At the end of the cycle, the display shows **END.** Switch off the appliance by pressing the ON/OFF button, shut off the water tap and unplug the appliance from the electricity socket.
9. Wait for a few minutes before removing the crockery in order to avoid burns. Unload the racks, beginning with the lower level.

⚠ **- The machine will switch off automatically during long periods of inactivity in order to minimise electricity consumption.**

⚠ **AUTO WASH CYCLES***:some dishwasher models are equipped with a special sensor which can be used to assess the level of soiling and automatically select the most efficient and economical wash cycle accordingly. The duration of the auto wash cycles may vary due to the operation of the sensor.

Changing a wash cycle in progress

If a mistake was made in the wash cycle selection process, it is possible to change the cycle provided that it has only just begun: once the wash cycle has started, in order to change the wash cycle switch off the machine by pressing and holding the ON/OFF/Reset button. Switch it back on using the same button and select the desired wash cycle and options.

Adding extra crockery

Press the Start/Pause button and open the door, taking care to avoid the escaping steam, and place the crockery inside the dishwasher. Press the Start/Pause button: The cycle will start again after a long beep has been emitted.

⚠ If the delayed start has been set, at the end of the countdown the wash cycle will not start. It will stay in Pause mode.

⚠ Press the Start/Pause button to pause the machine; the wash cycle is stopped.
At this stage it is not possible to change the wash cycle.

Accidental interruptions

If the door is opened during the wash cycle or there is a power cut, the cycle stops. It starts again from the point at which it was interrupted once the door has been shut or the electricity supply is restored.

* Only available in selected models.

Measuring out the detergent

A good wash result also depends on the correct amount of detergent being used. Exceeding the stated amount does not result in a more effective wash and increases environmental pollution.

Based on how soiled the items are, the amount can be adjusted to individual cases using powder or liquid detergent.
In the case of normally soiled items, use approximately either 35 gr (powder detergent) or 35 ml (liquid detergent). If tablets are used, one tablet will be enough.

If the crockery is only lightly soiled or it has been rinsed with water before being placed in the dishwasher, reduce the amount of detergent considerably.

For good washing results also follow the instructions shown on the detergent box. For further questions please ask the detergent producers' Advice Offices.

If the detergent dispenser is still closed, use the closing device "A" to open it.

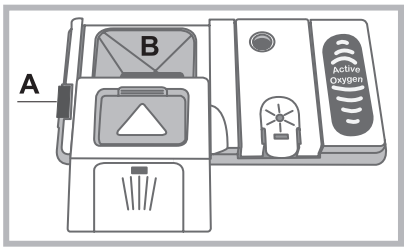

Introduce the detergent into the dry dispenser "B" only. Place the amount of detergent for pre-washing directly inside the tub.

1. When measuring out the detergent refer to the Table of wash cycles to add the proper quantity. Compartment **B** comprises a level showing the maximum quantity of liquid or powder detergent that can be added to each cycle.

2. Remove detergent residues from the edges of the dispenser and close the cover until it clicks.

3. Close the lid of the detergent dispenser by pulling it up until the closing device is secured in place.
The detergent dispenser automatically opens up at the right time according to the wash cycle.

If all-in-one detergents are used, we recommend using the TABS option, because it adjusts the cycle so that the best washing and drying results are always achieved.

⚠ **Only use detergent which has been specifically designed for dishwashers.**

DO NOT USE washing up liquid.

Using excessive detergent may result in foam residue remaining in the machine after the cycle has ended.

The use of tablets is only recommended for models which offer the MULTI-FUNCTIONAL TABLETS option.

To achieve the best results from each washing and drying cycle, powder detergent, rinse-aid liquid and salt should be used.

Wash cycles

GB

Wash-cycle data is measured under laboratory conditions according to European Standard EN 50242.
Based on the different conditions of use, the wash-cycle duration and data can change.

⚠ **The number and type of wash cycles and options may vary depending on the dishwasher model.**

Wash Cycle	Drying	Options	Wash Cycle Duration	Water Consumption (l/cycle)	Energy Consumption (kWh/cycle)
Eco	Yes	Delayed start – Half Load – Tabs – Extra Dry	03:10’	11	1,04
Intensive	Yes	Delayed start – Half Load – Tabs – Extra Dry – Short Time	02:30’	16,5	1,65
Normal	Yes	Delayed start – Half Load – Tabs – Extra Dry – Short Time	02:00’	16,0	1,3
Fast	No	Delayed start – Half Load – Tabs	01:00	11,5	1,1
Delicates	Yes	Delayed start – Half Load – Tabs – Extra Dry	01:30	12	1,1
Express 30’	No	Delayed start – Tabs	00:30’	8,5	0,45
Soak	No	Delayed start – Half Load	00:10’	4	0,01
Sanitizing	Yes	Delayed start	01:20	11,5	1,3

Instructions on wash-cycle selection and detergent dosage

1. The ECO wash cycle is the standard cycle to which the energy label data refers. It can be used to wash crockery with a normal soil level and is the most efficient cycle in terms of energy and water consumption for this type of crockery. 27 gr/ml + 6 gr/ml** – 1 Tab (**Quantity of pre-washing detergent)

2. Heavily soiled dishes and pans (not to be used for delicate items). 30 gr/ml – 1 Tab

3. Normally soiled pans and dishes. 27 gr/ml + 6 gr/ml** – 1 Tab

4. Limited quantity of daily soiling (ideal for 4 place settings) 25 gr/ml – 1 Tab

5. Cycle for delicate items, which are more sensitive to high temperatures 30 gr/ml – 1 Tab

6. Fast cycle to be used for slightly dirty dishes (ideal for 2 place settings) 25 gr/ml – 1 Tab

7. Pre-wash while awaiting completion of the load with the dishes from the next meal. No detergent.

8. High-temperature disinfecting cycle. Ideal to clean crockery and feeding bottles. 30 gr/ml – 1 Tab

Standby consumption: Left-on mode consumption: 5,0 W - Off mode consumption: 0.5 W

Notes:
Optimum performance levels when using the “Fast" and "Express 30’” cycles can be achieved by respecting the specified number of place settings.

To reduce consumption even further, only run the dishwasher when it is full.

Note for Test Laboratories: for information on comparative EN testing conditions, please send an email to the following address: ASSISTENZA_EN_LVS@indesitcompany.com

Wash options*

The OPTIONS may only be set, changed or reset after the wash cycle has been selected and before the Start/ Pause button has been pressed.

Only the options which are compatible with the type of wash cycle set may be selected. If an option is not compatible with the selected wash cycle *(see Table of wash cycles)*, the corresponding symbol flashes rapidly 3 times.

If an option is selected which is not compatible with another (previously selected) option, it will flash 3 times and switch off, while the most recently selected option will remain active. To deselect an option which has been set by mistake, press the corresponding button again.

Delayed start

It is possible to delay the start time of the cycle for a period of time between **1** and **24** hours:
1. Select the desired wash cycle and any other options required, press the DELAYED START button. The relevant symbol starts flashing. Use the buttons + and - to select when the wash cycle will start (h01, h02 etc.)
2. Confirm with the START/PAUSE button. The symbol stops flashing and the countdown begins.
3. Once this time has elapsed, the DELAYED START symbol switches off and the wash cycle begins.
To deselect the DELAYED START option, press the DELAYED START button until the text **OFF** appears.
The Delayed Start function cannot be set once a wash cycle has been started.

Short Time option

This option can be used to reduce the duration of the main wash cycles while maintaining the same washing and drying performance levels.
Having selected the option, press the Short Time button. To deselect the option, press the same button again.

Extra drying*

To improve the dryness level of the crockery, press the EXTRA DRYING button; the indicator light will illuminate. If it is pressed again the option will be deselected.
A higher temperature during the final rinsing and a longer drying phase improve the dryness level.

⚠ **The EXTRA DRYING option increases the duration of the wash cycle.**

Half load*

If there are not many dishes to be washed, a half load cycle may be used in order to save water, electricity and detergent. Select the wash cycle and press the HALF LOAD button: the indicator light will illuminate.
Press the HALF LOAD button to deselect this option.

Remember to halve the amount of detergent.

Multi-functional tablets* (Tabs)

This option optimises washing and drying results.
When using multi-functional tablets, press the MULTI-FUNCTIONAL TABLETS button; the corresponding indicator will light up. If the button is pressed again, the option will be deselected.

⚠ **The “Multi-functional tablets” option results in a longer wash cycle.**

⚠ **The use of tablets is only recommended for models having this option and it is not recommended with wash cycles which do not specify the use of multi-functional tablets**.

* Only available in selected models.

Rinse aid and refined salt

GB

⚠ **Only use products which have been specifically designed for dishwashers.**
Do not use table/industrial salt or washing-up liquid.
Follow the instructions given on the packaging.

⚠ If using a multi-functional product it is not necessary to add any rinse aid. However, **we recommend that you add salt, especially if you live in an area where the water is hard or very hard.** *(Follow the instructions given on the packaging.)*

⚠ **If you do not add salt or rinse aid, the LOW SALT* and LOW RINSE AID* indicator lights will stay lit.**

Measuring out the rinse aid

Rinse aid makes it easier for the crockery to dry, as water runs off the surfaces more readily and therefore does not leave streaks or marks. The rinse aid dispenser should be filled:

- When the LOW RINSE AID indicator light* on the control panel is illuminated, a reserve supply of rinse aid is still available for 1-2 cycles;

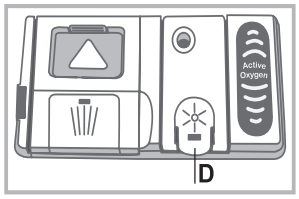

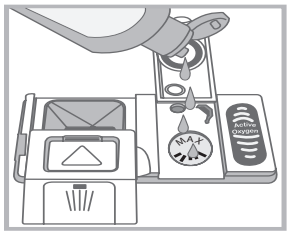

1. Open the dispenser **"D"** by pressing and pulling up the tab on the lid;
2. Carefully introduce the rinse aid as far as the maximum reference notch of the filling space - avoid spilling it. If this happens, clean the spill immediately with a dry cloth.
3. Press the lid down until you hear a click to close it.

NEVER pour the rinse aid directly into the appliance tub.

Rinse-aid dispenser setting

If you are not completely satisfied with the drying results, you can adjust the quantity of rinse aid. Switch the dishwasher on and off using the On/Off button.
Press the Start/Pause button 3 times; switch on the machine using the ON/OFF button and access the adjustment menu - the rinse-aid indicator light is lit *(set to factory level).*
Select the level of rinse aid supply using the ECO cycle button (0 to 4 max.)
Press the ON/OFF button to save the setting.
If the rinse aid level is set to ZERO, no rinse aid will be supplied. The LOW RINSE AID indicator light will not illuminate if you run out of rinse aid.

- If there are streaks on the crockery, set the adjustment device to a lower number (1-2.)
- If there are drops of water or limescale marks, set the adjustment device to a higher number (3-4.)

Setting the water hardness

Every dishwasher is equipped with a water softener which, by using refined salt specially designed for this type of appliance, supplies water without limescale which is then used to wash the crockery.
This dishwasher offers a setting which helps to reduce pollution and optimises washing performance in accordance with the water hardness level in your area. This information can be obtained from the organisation which supplies your household with water.
- Switch on the dishwasher using the ON/OFF button, wait a few seconds and switch it off using the ON/OFF button. Hold down the Start/Pause button for min. 3 seconds; switch on the machine using the ON/OFF button and access the adjustment menu - the salt indicator light is lit.
- Select the desired level (1 to 5* max. based on the dishwasher model) using the ECO button *(water softener set to medium level).*

Press the ON/OFF button to save the setting.
Even if using multi-functional tablets, the salt dispenser should still be filled.

Water Hardness Table				Average salt dispenser capacity duration**
level	**°dH**	**°fH**	**mmol/l**	**months**
1	**0 - 6**	**0 - 10**	**0 - 1**	7 months
2	**6 - 11**	**11 - 20**	**1,1 - 2**	5 months
3	**12 - 17**	**21 - 30**	**2,1 - 3**	3 months
4	**17 - 34**	**31 - 60**	**3,1 - 6**	2 months
5*	**34 - 50**	**61 - 90**	**6,1 - 9**	2/3 weeks

For values between 0°f and 10°f, we do not recommend the use of salt.
* a setting of 5 may increase cycle duration.
** 1 wash cycle per day.

(°dH = hardness measured in German degrees - °f = hardness measured in French degrees – mmol/l = millimoles per litre)

Measuring out the refined salt

In order to obtain the best possible results from a wash cycle, make sure that the salt dispenser is never empty.
Refined salt removes limescale from the water, thus avoiding the formation of deposits on crockery.
The salt dispenser is located in the lower part of the dishwasher *(see Description)* and should be filled:

- When the LOW RINSE AID indicator light on the control panel is illuminated *;

1. Remove the lower rack and unscrew the cap (anticlockwise.)
2. The first time you do this: fill the water tank right up to its edge.
3. Position the funnel* *(see figure)* and fill the salt dispenser up to the edge (approximately 1 kg.) It is normal for a little water to leak out.

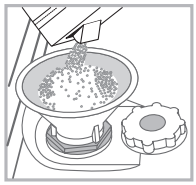

4. Remove the funnel* and wipe any salt residues away from the opening; rinse the cap under running water and then screw it on, the head facing downwards so as to let the water flow out of the four slots (star-shaped arrangement) in the lower part of the cap (cap with green float*.)

It is advisable to perform this procedure every time you add salt to the dispenser.
Make sure the cap is screwed on tightly so that no detergent can get into the container during the wash cycle (this could damage the water softener beyond repair.)

⚠ When necessary, measure out the salt before a wash cycle so that any saline solution which has leaked out of the salt dispenser is removed.

* Only available in selected models.

Care and maintenance

Hotpoint

GB

Shutting off the water and electricity supplies

- Turn off the water tap after every wash cycle to avoid leaks.
- Always unplug the appliance when cleaning it and when performing maintenance work.

Cleaning the dishwasher

- The external surfaces of the machine and the control panel can be cleaned using a non-abrasive cloth which has been dampened with water. Do not use abrasive detergents or . solvents.
- Any marks on the inside of the appliance may be removed using a cloth dampened with water and a little vinegar.

Preventing unpleasant odours

- Always keep the door of the appliance ajar in order to avoid moisture from forming and being trapped inside the machine.
- Clean the seals around the door and detergent dispensers regularly using a damp sponge. This will avoid food becoming trapped in the seals, which is the main cause behind the formation of unpleasant odours.

Cleaning the sprayer arms

Food residue may become encrusted onto the sprayer arms and block the holes used to spray the water. It is therefore recommended that you check the arms from time to time and clean them with a small non-metallic brush.
The two sprayer arms may both be removed.

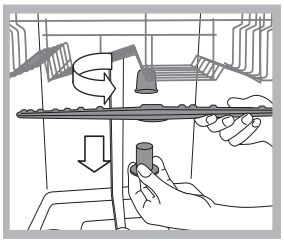

To remove the upper sprayer arm, turn the plastic locking ring in an anti-clockwise direction. The upper sprayer arm should be replaced so that the side with the greater number of holes is facing upwards.

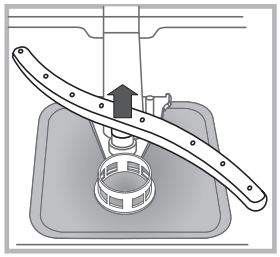

The lower sprayer arm can be removed by pressing on the side tabs and pulling it upwards.

Cleaning the water inlet filter*

If the water hoses are new or have not been used for an extended period of time, let the water run to make sure it is clear and free of impurities before performing the necessary connections. If this precaution is not taken, the water inlet could become blocked and damage the dishwasher.

⚠ Clean the water inlet filter at the tap outlet regularly.
- Turn off the water tap.
- Unscrew the end of the water inlet hose, remove the filter and clean it carefully under running water.
- Re-place the filter and screw the water hose back into position.

Cleaning the filters

The filter assembly consists of three filters which remove food residues from the washing water and then recirculate the water. They should be cleaned if you wish to achieve the best results in every wash.

⚠ Clean the filters regularly.

⚠ The dishwasher should not be used without filters or if the filter is loose.

• After several washes, check the filter assembly and if necessary clean it thoroughly under running water, using a non-metallic brush and following the instructions below:
1. Turn the cylindrical filter **C** in an anti-clockwise direction and pull it out *(fig. 1).*
2. Remove the cup filter **B** by exerting a slight pressure on the side flaps *(fig. 2);*
3. Slide out the stainless-steel plate filter **A**. *(fig. 3).*
4. Inspect the trap and remove any food residues. **NEVER REMOVE** the wash-cycle pump protection *(black detail) (fig.4).*

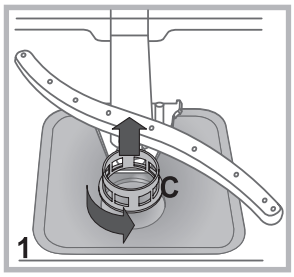

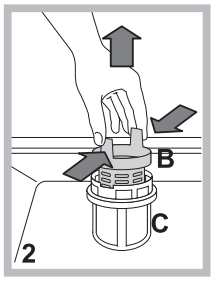

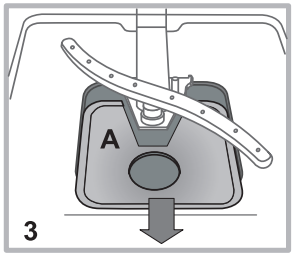

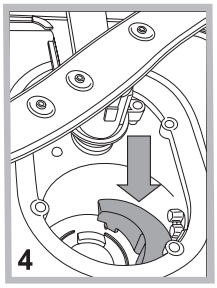

After cleaning the filters, re-place the filter assembly and fix it in position correctly; this is essential for maintaining the efficient operation of the dishwasher.

Leaving the machine unused for extended periods

- Disconnect the appliance from the electricity supply and shut off the water tap.
- Leave the door of the appliance ajar.
- When you return, run a wash cycle when the dishwasher is empty.

* Only available in selected models.

Troubleshooting

GB

Whenever the appliance fails to work, check for a solution from the following list before calling for Assistance.

Problem:	Possible causes / Solutions:
The dishwasher does not start or cannot be controlled.	• Switch off the appliance by pressing the ON/OFF button, switch it back on after approximately one minute and reset the cycle. • The appliance has not been plugged in properly. • The dishwasher door has not been shut properly.
The door won't close.	• The lock was released. Strongly push the door until a "clacking" noise is heard.
No water drains from the dishwasher.	• The dishwasher cycle has not yet finished. • The water inlet hose is bent (*see Installation*). • The drain duct is blocked. • The filter is clogged up with food residues.
The dishwasher makes excessive noise.	• The dishes are rattling against each other or against the sprayer arms. • An excessive amount of foam has been produced: the detergent has not been measured out correctly or it is not suitable for use in dishwashers *(see Start-up and use).*
The dishes and glasses are covered in a white film or limescale deposits.	• The level of refined salt is low or the dosage setting is not suited to the hardness of the water (*see Rinse aid and salt*). • The lid on the salt dispenser is not closed properly. • The rinse aid has been used up or the dosage is too low.
The dishes and glasses are streaked or have a bluish tinge.	• The rinse aid dosage is too high.
The crockery has not been dried properly.	• A wash cycle without a drying cycle has been selected. • The rinse aid has been used up or the dosage is too low (*see Rinse aid and salt*). • The rinse aid dispenser setting is not suitable. • The crockery is made from non-stick material or plastic.
The dishes are not clean.	• The racks are overloaded (*see Loading the racks*). • The crockery has not been arranged properly. • The sprayer arms cannot rotate freely. • The wash cycle is too gentle (*see Wash cycles*). • An excessive amount of foam has been produced: the detergent has not been measured out correctly or it is not suitable for use in dishwashers *(see Start-Up and Use).* • The lid on the rinse aid compartment has not been shut correctly. • The filter is dirty or blocked (*see Care and maintenance*). • The refined salt level is low (*see Rinse aid and salt*). • Switch off the appliance by pressing the ON/OFF button. Shut off the water tap to eliminate the risk of flooding and remove the plug from the electrical socket. Make sure the water inlet filter has not become blocked by impurities (see "Care and maintenance" chapter).
The dishwasher does not take any water in - Tap shut-off alarm (indicator light ON/OFF flashing; **H2O** and **tap** symbol displayed; **F 6** appears after a few seconds).	• There is no water in the mains supply. • The water inlet hose is bent (see *Installation*). • Turn on the tap and the appliance will start after a few minutes. • The appliance lock has been activated because no action was taken when the beeps sounded. Switch off the appliance using the ON/OFF button, turn on the tap and switch the appliance back on after a few seconds by pressing the same button. Re-program the appliance and restart the wash cycle.
Clogged filter alarm The "**filter**" symbol on the display will light up.	• Make sure the wash cycle has ended, open the dishwasher door and clean the cup filter and stainless-steel filter (see "Care and maintenance" chapter). The "blocked filter" symbol will go off when the following cycle starts.

* Only available in selected models.

After Sales Service

Hotpoint

GB

After Sales Service

No one is better placed to care for your Hotpoint appliance during the course of its working life than us - the manufacturer.

Essential Contact Information

Hotpoint Service
We are the largest service team in the country offering you access to 400 skilled telephone advisors and 1000 fully qualified engineers on call to ensure you receive fast, reliable, local service.

UK: 08448 224 224
Republic of Ireland: 0818 313 413
www.hotpointservice.co.uk

Please note: Our advisors will require the following information:

Model number:

Serial number:

Parts and Accessories

We supply a full range of genuine replacement parts as well as accessory products that protect and hygienically clean your appliance to keep it looking good and functioning efficiently throughout its life.

UK: 08448 225 225
Republic of Ireland: 0818 313 413
www.hotpointservice.co.uk

Appliance Registration

We want to give you additional benefits of Hotpoint ownership. To activate your free 5 year parts guarantee you must register your appliance with us.

UK: 08448 24 24 24
Republic of Ireland: 01 230 0800
www.hotpointservice.co.uk

Indesit Company UK Ltd. Morley Way, Peterborough, PE2 9JB

Indesit Company Unit 49 Airways Industrial Estate,Dublin 17

Recycling and Disposal Information
As part of Hotpoint's continued commitment to helping the environment, Hotpoint reserves the right to use quality recycled components to keep down customer costs and minimise material wastage.

Please dispose of packaging and old appliances carefully. To minimise risk of injury to children, remove the door, plug and cut mains cable off flush with the appliance. Dispose of these parts separately to ensure that the appliance can no longer be plugged into a mains socket and the door cannot be locked shut.

GB

Guarantee

12 months Parts and Labour Guarantee

Your appliance has the benefit of our manufacturer's guarantee, which covers the cost of breakdown repairs for twelve months from the date of purchase.

This gives you the reassurance that if, within that time, your appliance is proven to be defective because of either workmanship or materials, we will, at our discretion, either repair or replace the appliance at no cost to you.

This guarantee is subject to the following conditions:

- The appliance has been installed and operated correctly and in accordance with our operating and maintenance instructions.
- The appliance is used only on the electricity or gas supply printed on the rating plate.
- The appliance has been used for normal domestic purposes only.
- The appliance has not been altered, serviced, maintained, dismantled, or otherwise interfered with by any person not authorised by us.
- Any repair work must be undertaken by us or our appointed agent.
- Any parts removed during repair work or any appliance that is replaced become our property.
- The appliance is used in the United Kingdom or Republic of Ireland.

The guarantee does not cover:

- Damage resulting from transportation, improper use, neglect or interference or as a result of improper installation.
- Replacement of any consumable item or accessory. These included but not limited to: plugs, cables, batteries, light bulbs, fluorescent tubes and starters, covers and filters.
- Replacement of any removable parts made of glass or plastic.

THIS GUARANTEE WILL NOT APPLY IF THE APPLIANCE HAS BEEN USED IN COMMERCIAL OR NON-DOMESTIC PREMISES.

5 Year Parts Guarantee

Hotpoint also offers you a free 5 year parts guarantee. This additional guarantee is conditional on you registering your appliance with us and the parts being fitted by one of our authorised engineers. There will be a charge for our engineer's time. To activate the extra parts warranty on your appliance, simply call our registration line on **08448 24 24 24 (Republic of Ireland 01 230 0800)**

Extended Guarantees

We offer a selection of protection plans that enable you to fully cover yourself against the expense of repair bills for the life of your policy. To find the ideal plan for you please call our advice line on **08448 226 226 (Republic of Ireland 01 230 0233).**

Free Helpdesk Service

We have a dedicated team who can provide free advice and assistance with your appliance if you experience any technical difficulties within the first 90 days of ownership. Simply call our Hotpoint Service Hotline on **08448 224 224 (Republic of Ireland 0818 313 413)** for telephone assistance, or, where necessary, to arrange for an engineer to call.