# POWER HEAT

# PORTABLE FORCED AIR HEATERS

## OWNER'S MANUAL

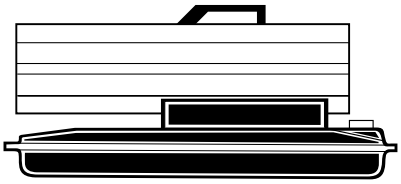

**PH30EDI 30,000 BTU/Hr PH70EDI 70,000 BTU/Hr**

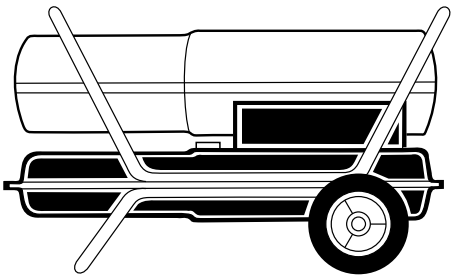

**PH100EDI 90,000 BTU/Hr**

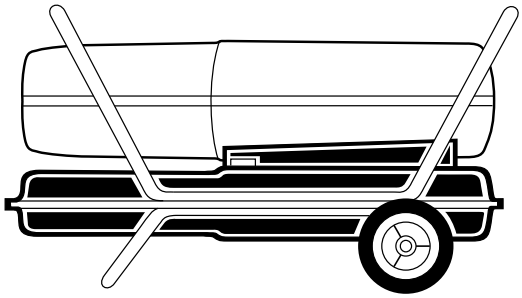

**PH150EDI 150,000 BTU/Hr**

**IMPORTANT**

**Read and understand this manual before assembling, starting or servicing heater. Improper use of heater can cause serious injury. Keep this manual for future reference.**

# CONTENTS


| SECTION | PAGE |
|---|---|
| Flame-Out Information | 3 |
| Product Identification | 4 |
| Unpacking | 5 |
| Assembly | 5 |
| Theory of Operation | 6 |
| Fuels | 6 |
| Ventilation | 7 |
| Operation | 7 |
| Storage | 8 |
| Preventative Maintenance Schedule | 8 |
| Troubleshooting | 9 |
| Service Procedures | 10 |
| Upper Shell Removal | 10 |
| Fuel Filter (30/70,000 BTU/Hr Models) | 10 |
| Fuel Filter (90,000 BTU/Hr Model) | 11 |
| Fuel Filter (150,000 BTU/Hr Model) | 11 |
| Spark Plug (30,000 BTU/Hr Model) | 12 |
| Spark Plug (70/90/150,000 BTU/Hr Models) | 13 |
| Air Output, Air Intake, and Lint Filters | 14 |
| Pump Pressure Adjustment | 14 |
| Nozzle (30,000 BTU/Hr Model) | 15 |
| Nozzle (70/90,000 BTU/Hr Models) | 16 |
| Nozzle (150,000 BTU/Hr Model) | 17 |
| Pump Rotor | 18 |
| Fan | 19 |
| Specifications | 19 |
| Wiring Diagrams | 20 |
| Illustrated Parts Breakdown and Parts List | 21 |
| Wheels and Handles (90/150,000 BTU/Hr Models) | 21 |
| 30,000 BTU/Hr Model | 22 |
| 70,000 BTU/Hr Model | 24 |
| 90,000 BTU/Hr Model | 26 |
| 150,000 BTU/Hr Model | 28 |
| Accessories | 30 |
| Warranty and Repair Service | Back Cover |

# SAFETY INFORMATION

## ⚠ WARNINGS

**IMPORTANT: Read this owner's manual carefully and completely before trying to assemble, operate, or service this heater. Improper use of this heater can cause serious injury or death from burns, fire, explosion, electrical shock, and carbon monoxide poisoning.**

### ⚠ DANGER

**Carbon monoxide poisoning may lead to death!**

**Carbon Monoxide Poisoning:** Early signs of carbon monoxide poisoning resemble the flu, with headaches, dizziness, or nausea. If you have these signs, the heater may not be working properly. **Get fresh air at once!** Have heater serviced. Some people are more affected by carbon monoxide than others. These include pregnant women, persons with heart or lung disease or anemia, those under the influence of alcohol, and those at high altitudes.

Make certain you read and understand all warnings. Keep this manual for reference. It is your guide to safe and proper operation of this heater.

- Use only kerosene or No. 1 fuel oil to avoid risk of fire or explosion. Never use gasoline, naphtha, paint thinners, alcohol, or other highly flammable fuels.
- Never use heater where gasoline, paint thinner, or other highly flammable vapors are present.
- Follow all local ordinances and codes when using heater.
- Use only in well-vented areas. Provide at least a 2800 square cm opening of fresh, outside air for each 100,000 BTU/Hr of rating.
- Use only in places free of flammable vapors or high dust content.
- Use only with the electrical voltage and frequency specified on model plate.
- Use only a three-wire, grounded (earthed) extension cord.
- Minimum heater clearances from combustibles:
  Outlet: 250 cm  Sides, Top, and Rear: 125 cm
- Locate heater on a stable and level surface while hot or running or a fire may occur.
- When moving or storing heater, keep heater in a level position or fuel spillage may occur.
- Keep children and animals away from heater.
- Unplug heater when not in use.
- When used with thermostat, heater may start anytime.
- Never use heater in living or sleeping areas.
- Never block air inlet (rear) or air outlet (front) of heater.
- Never move, handle, refuel, or service a hot, operating, or plugged-in heater.
- Never attach duct work to front or rear of heater.

# PRODUCT IDENTIFICATION

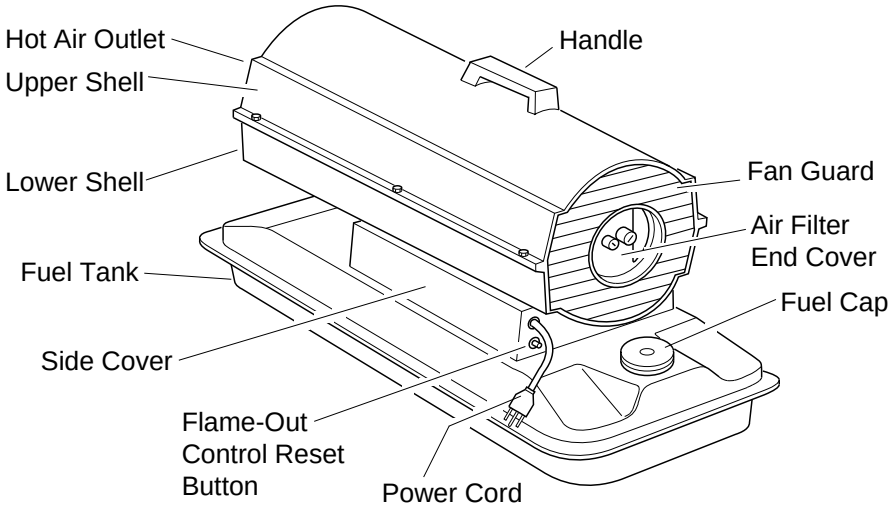


***Figure 1 - 30/70,000 BTU/Hr Models***

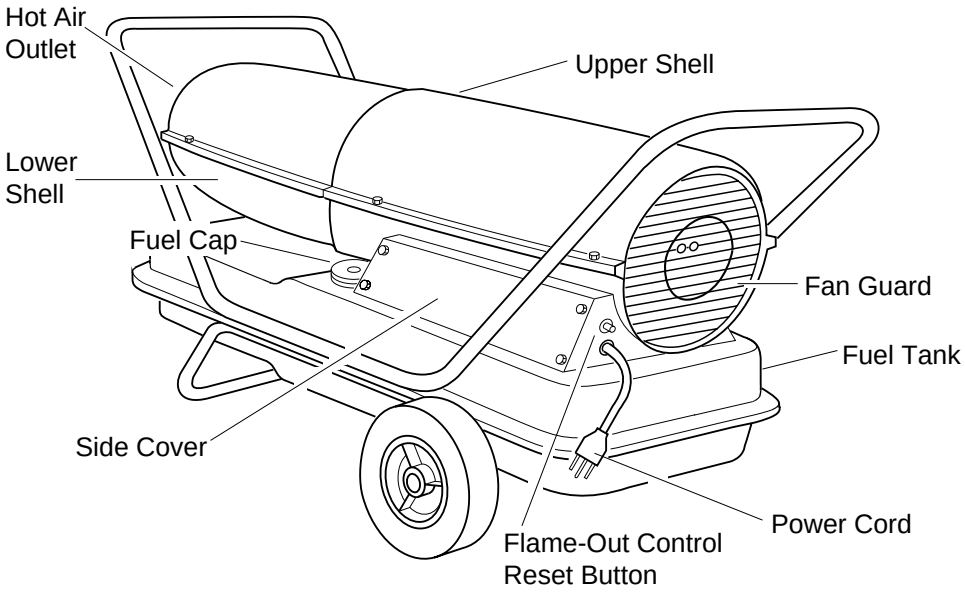


***Figure 2 - 90,000 BTU/Hr Model***

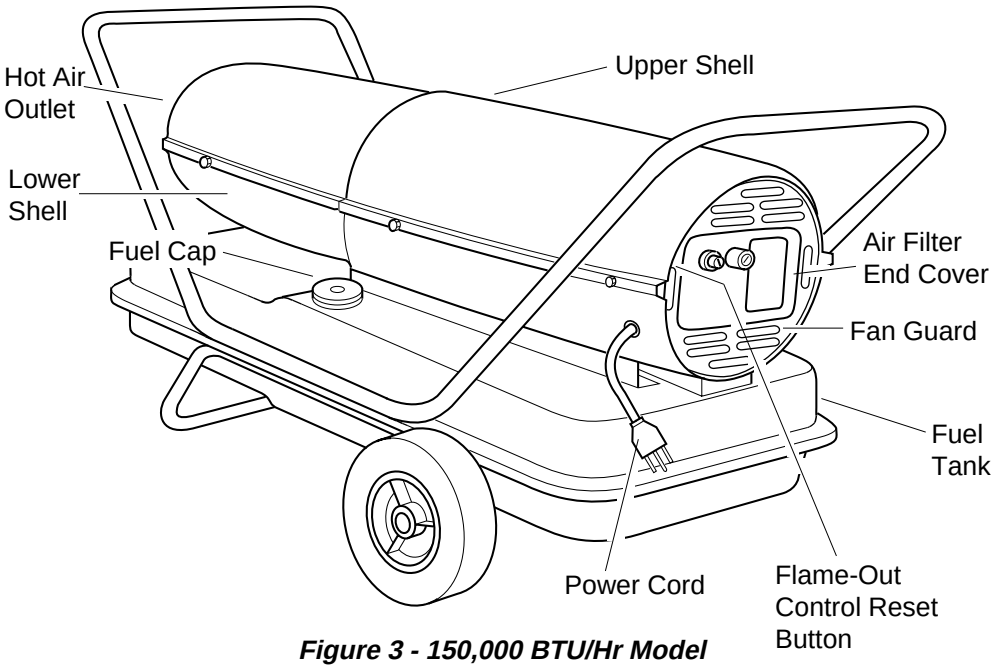


***Figure 3 - 150,000 BTU/Hr Model***

# UNPACKING

1. Remove all packing items applied to heater for shipment.
2. Remove all items from carton.
3. Check items for any shipping damage. If heater is damaged, promptly inform dealer where you bought heater.

# ASSEMBLY

(For 90,000 and 150,000 BTU/Hr Models Only)

These models are furnished with wheels and handles. Wheels, handles, and the mounting hardware are found in the shipping carton.

## Tools Needed

- Medium Phillips Screwdriver
- 3/8" Open or Adjustable Wrench
- Hammer

1. Slide axle through wheel support frame. Install wheels on axle.
   *IMPORTANT:* When installing wheels, point extended hub of wheels toward wheel support frame (see Figure 4).
2. Place cap nuts on axle ends. Gently tap with hammer to secure.
3. Place heater on wheel support frame. Make sure air inlet end (rear) of heater is over wheels. Line up holes on fuel tank flange with holes on wheel support frame.
4. Place front handle and rear handle on top of fuel tank flange. Insert screws through handles, fuel tank flange, and wheel support frame. Attach nut finger tight after each screw is inserted.
5. After all screws are inserted, tighten nuts firmly.

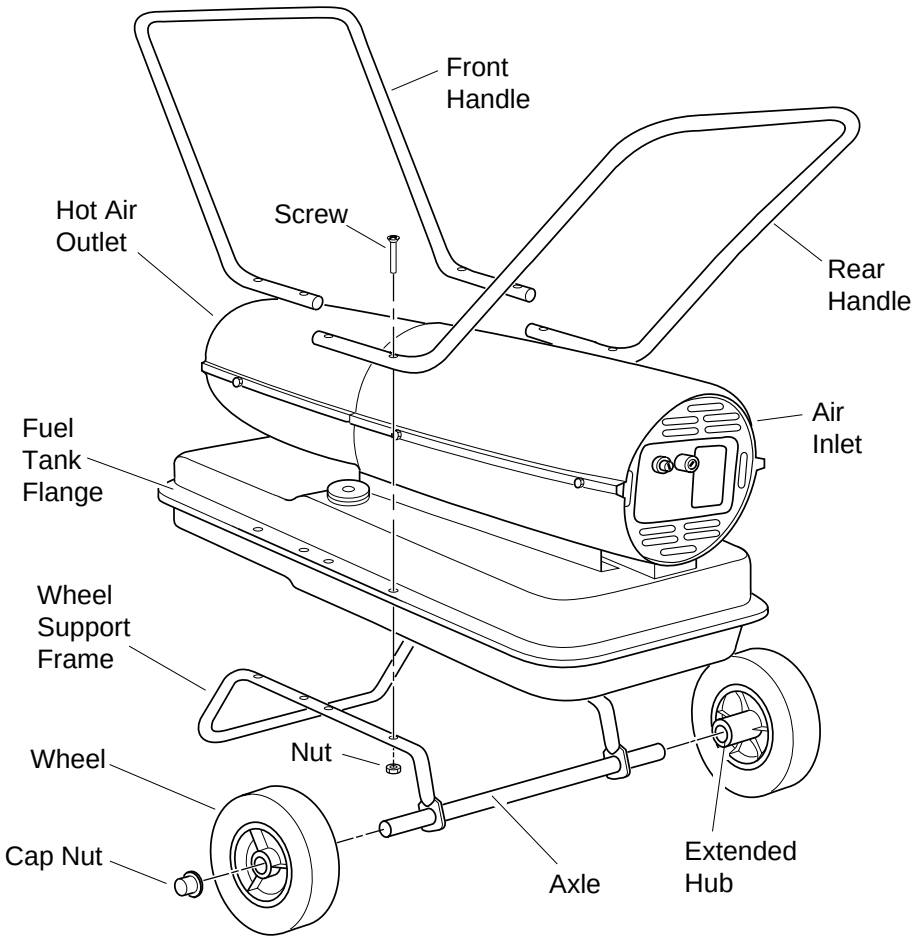


***Figure 4 - Wheel and Handle Assembly, 90/150,000 BTU/Hr Models Only***

# THEORY OF OPERATION

**The Fuel System:** The air pump forces air through the air line. The air is then pushed through the burner head nozzle. This air causes fuel to lift from the tank. A fine mist of fuel is sprayed into the combustion chamber.

**The Air System:** The motor turns the fan. The fan pushes air into and around the combustion chamber. This air is heated and provides a stream of clean, hot air.

**The Ignition System:** The electronic ignitor sends voltage to the spark plug. The spark plug ignites the fuel and air mixture.

**The Flame-Out Control System:** This system causes the heater to shut down if the flame goes out.

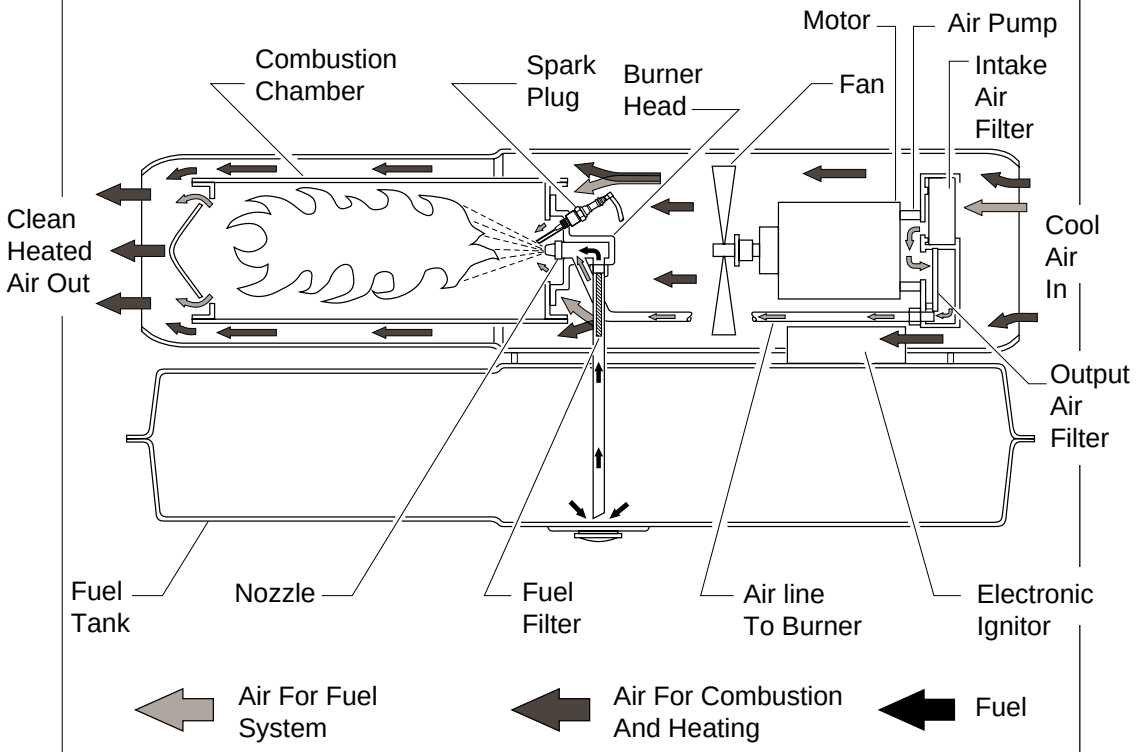


***Figure 5 - Cross Section Operational View***

# FUELS

**⚠ WARNING**

**Use only kerosene or No. 1 fuel oil to avoid risk of fire or explosion. Never use gasoline, naphtha, paint thinners, alcohol or other highly flammable fuels.**

Do not use heavy fuels such as No. 2 fuel oil or No. 2 Diesel. Using heavy fuels will result in:

- clogged fuel filter and nozzle
- carbon build up on spark plug
- use of non-toxic anti-icer in fuel during very cold weather

*IMPORTANT:* Use a KEROSENE ONLY container. Be sure storage container is clean. Foreign matter such as rust, dirt, or water will cause the flame-out control to shut down heater. Foreign matter may also require you to clean fuel system often.

# VENTILATION

**⚠ WARNING**

**Follow the minimum fresh, outside air ventilation requirements. If proper fresh, outside air ventilation is not provided, carbon monoxide poisoning can occur. Provide proper fresh, outside air ventilation before running heater.**

Provide a fresh air opening of at least 2800 square cm for each 100,000 BTU/Hr rating. Provide extra fresh air if more heaters are being used.

*Example:* A 150,000 BTU/Hr heater requires one of the following:

- a two-car garage door raised 15.24 cm
- a single-car garage door raised 22.86 cm
- two, 76.20 cm windows raised 30.48 cm

# OPERATION

**⚠ WARNING**

**Review and understand the warnings in the Safety Information Section. They are needed to safely operate this heater. Follow all local codes when using this heater.**

## To Start Heater

1. Follow all ventilation and safety information.
2. Fill fuel tank with kerosene or No. 1 fuel oil.
3. Attach fuel cap.
4. Plug power cord of heater into standard 230 volt/50 hertz, grounded (earthed) outlet. Use an extension cord if needed. Use only a three-wire, grounded (earthed) extension cord.

   **Extension Cord Wire Size Requirements**

   Up to 30.5 meters long, use 16 AWG (1.0 $mm^2$) conductor
   30.6 to 61 meters long, use 14 AWG (1.5 $mm^2$) conductor

   Heater will start when power cord is plugged into outlet. If not, push in flame-out control reset button (see Figures 6 thru 8).

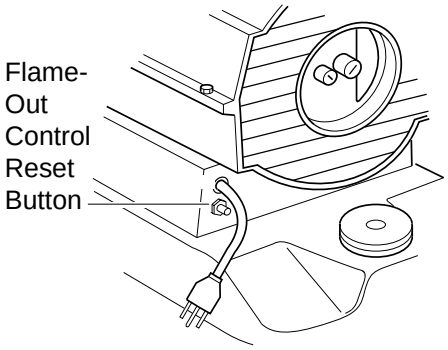


***Figure 6 - Flame-Out Control Reset Button, 30/70,000 BTU/Hr Models***

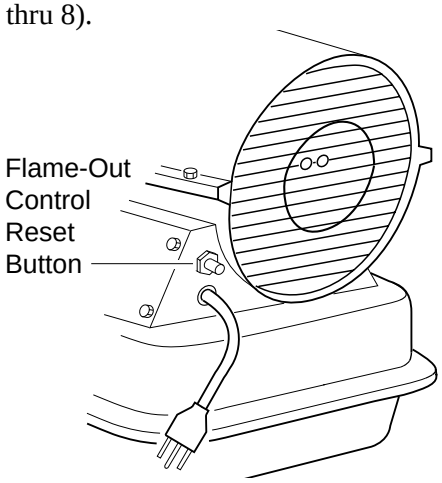


***Figure 7 - Flame-Out Control Reset Button, 90,000 BTU/Hr Model***

*Continued*

# OPERATION
*Continued*

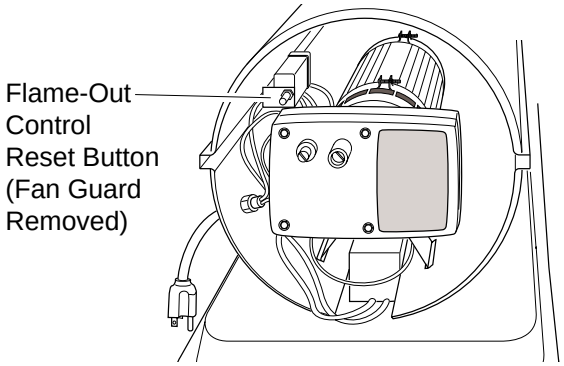


***Figure 8 - Flame-Out Control Reset Button, 150,000 BTU/Hr Model***

### To Stop Heater

1. Unplug power cord from outlet.

### To Restart Heater

1. Wait 2 minutes after stopping heater.
2. Repeat steps under *To Start Heater*, page 7.

# STORAGE

1. Drain fuel tank.
   *Note:* Some models have drain plug on underside of fuel tank. If so, remove drain plug to drain all fuel. If heater does not have drain plug, drain fuel through fuel cap opening. Be sure all fuel is removed.
2. Replace drain plug if used.
3. Add 4 liters of clean kerosene to fuel tank.
4. Attach fuel cap.
5. Move heater forwards and backwards to stir fuel.
6. Remove fuel cap or drain plug and drain fuel tank. Be sure all fuel is removed.
7. Replace fuel cap or drain plug. Properly dispose of old and dirty fuel.
8. Store heater in dry place. Make sure storage place is free of dust and corrosive fumes.

*IMPORTANT:* Do not store kerosene over summer months for use during next heating season. Using old fuel could damage heater.

# PREVENTATIVE MAINTENANCE SCHEDULE

**⚠ WARNING**

**Never service heater while it is plugged in, operating, or hot. Severe burns and electrical shock can occur.**

| Item | How Often | How To |
|---|---|---|
| Fuel tank | Flush every 150-200 hours of operation or as needed. | See *Storage* above. |
| Air output and lint filters | Replace every 500 hours of operation or once a year. | See *Air Output, Air Intake, and Lint Filters*, page 14. |
| Air intake filter | Wash and dry with soap and water every 500 hours of operation or as needed. | See *Air Output, Air Intake, and Lint Filters*, page 14. |
| Fuel filter | Clean twice a heating season or as needed. | See *Fuel Filter*, pages 10 and 11. |

*Continued*

*Continued*

| Item | How Often | How To |
|---|---|---|
| Spark plug | Clean and regap every 600 hours operation or replace as needed. | See *Spark Plug*, pages 12 and 13. |
| Fan blades | Clean every season or as needed. | See *Fan*, page 19. |
| Motor | Not required/permanently lubricated. | |

# TROUBLE-SHOOTING

**⚠ WARNING**

**Never service heater while it is plugged in, operating, or hot. Severe burns and electrical shock can occur.**

| OBSERVED FAULT | POSSIBLE CAUSE | REMEDY |
|---|---|---|
| Heater ignites, but flame-out control shuts off heater after a short period of time. | Wrong pump pressure | See *Pump Pressure Adjustment*, page 14. |
| | Dirty air output, air intake, and lint filters | See *Air Output, Air Intake and Lint Filters*, page 14. |
| | Dirty fuel filter | See *Fuel Filter*, pages 10 and 11. |
| | Dirt in nozzle | See *Nozzle*, pages 15 thru 17. |
| | Dirty photocell lens | Clean photocell lens. |
| | Bad flame-out control | Replace flame-out control. |
| Heater will not ignite, but motor runs for a short period of time. | Wrong pump pressure | See *Pump Pressure Adjustment*, page 14. |
| | Carbon deposits on spark plug and/or improper gap | See *Spark Plug*, pages 12 and 13. |
| | Dirty fuel filter | See *Fuel Filter*, pages 10 and 11. |
| | Dirt in nozzle | See *Nozzle*, pages 15 thru 17. |
| | Water in fuel tank | Drain and flush fuel tank with clean kerosene. See *Storage*, page 8. |
| | **⚠ WARNING: High voltage!** | |
| | Electronic ignitor not grounded (earthed) | Make sure electronic ignitor mounting is tight. |
| | Bad electronic ignitor | Replace electronic ignitor. |
| Motor does not start when heater is plugged in, fan rotates slowly or does not turn. | Flame-out control not reset | Reset flame-out control button, see Figures 6 thru 8, pages 7 and 8. |
| | Binding pump rotor | If fan is hard to turn, see *Pump Rotor*, page 18. |

# SERVICE PROCEDURES

**⚠ WARNING**

**Never service heater while it is plugged in, operating, or hot. Severe burns and electrical shock can occur.**

## Upper Shell Removal

1. Remove screws along each side of heater using 5/16" nut-driver. These screws attach upper and lower shells together.
2. Lift upper shell off.
3. Remove fan guard.

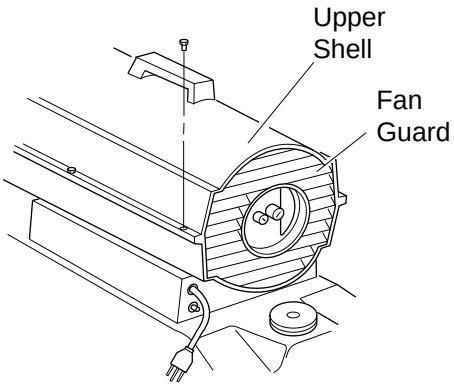


***Figure 9 - Upper Shell Removal, 30/70,000 BTU/Hr Models***

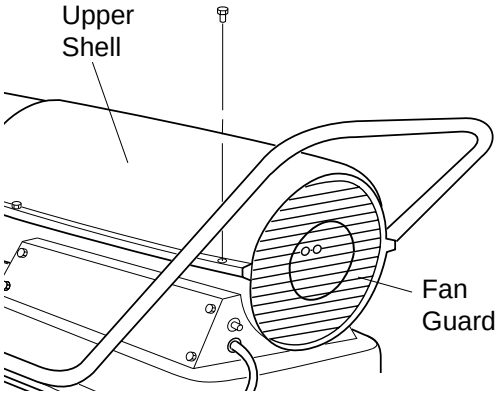


***Figure 10 - Upper Shell Removal, 90,000 BTU/Hr Model***

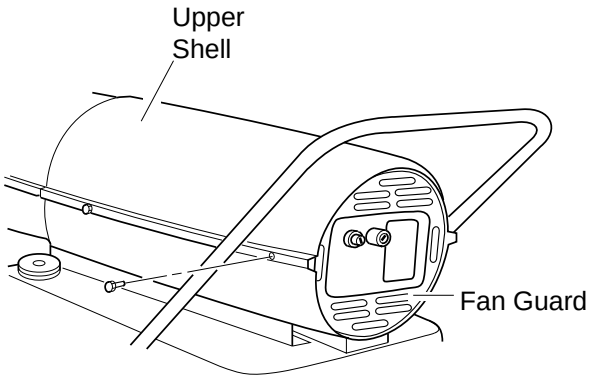


***Figure 11 - Upper Shell Removal, 150,000 BTU/Hr Model***

## Fuel Filter

**(30/70,000 BTU/Hr Models)**

1. Remove side cover screws using 5/16" nut-driver.
2. Remove side cover.
3. Pull rubber fuel line off fuel filter neck.
4. Carefully pry bushing and fuel filter out of fuel tank.
5. Wash fuel filter with clean fuel and replace in tank.
6. Attach rubber fuel line to fuel filter neck.
7. Replace side cover.

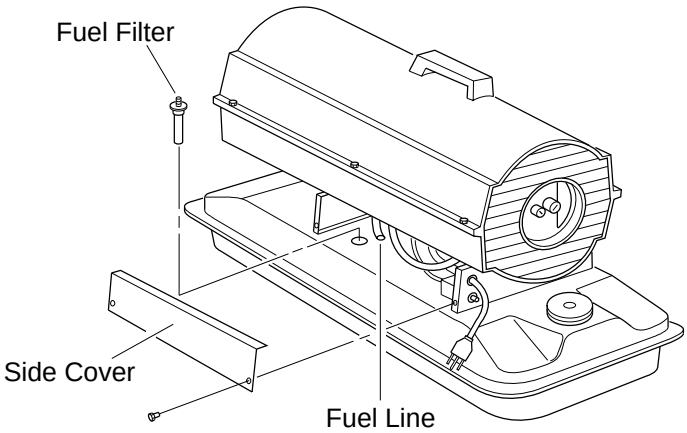


***Figure 12 - Fuel Filter Removal, 30/70,000 BTU/Hr Models***

## Fuel Filter

**(90,000 BTU/Hr Model)**

1. Remove side cover screws using 5/16" nut-driver.
2. Remove side cover.
3. Pull upper fuel line off fuel filter neck.
4. Carefully pry bushing, lower fuel line, and fuel filter out of fuel tank.
5. Wash fuel filter with clean fuel and replace in tank.
6. Attach upper fuel line to fuel filter neck.
7. Replace side cover.

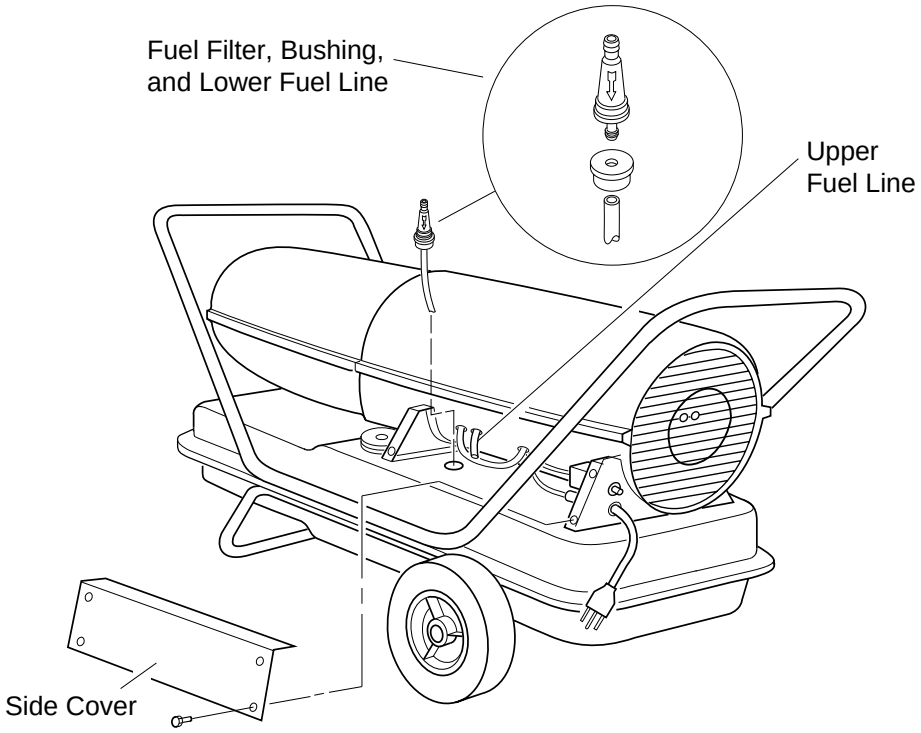


***Figure 13 - Fuel Filter Removal, 90,000 BTU/Hr Model***

## Fuel Filter

**(150,000 BTU/Hr Model)**

1. Remove upper shell (see page 10).
2. Remove fan (see page 19).
3. Loosen flare nut using 3/4" open-end wrench. Push fuel tube down, away from burner head. Fuel filter is located inside of fuel tube.
4. Lift out fuel filter.
5. Wash fuel filter with clean fuel and replace in fuel tube.
6. Connect fuel tube to burner head. Attach flare nut until nut seats against fuel tube and fitting. Tighten 1/4 turn more using 3/4" open-end wrench (11.3-14.7 n-m).
7. Replace fan (see page 19).
8. Replace fan guard and upper shell.

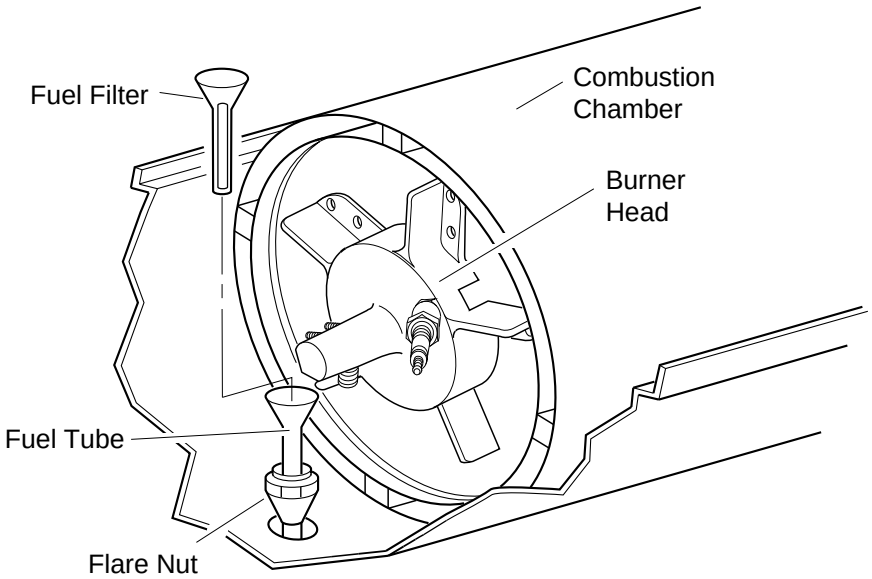


***Figure 14 - Fuel Filter Removal, 150,000 BTU/Hr Model***

## Spark Plug

**(30,000 BTU/Hr Model)**

1. Remove upper shell (see page 10).
2. Remove fan (see page 19).
3. Remove fuel and air line hoses from nozzle assembly.
4. Remove spark plug wire from spark plug.
5. Remove two screws using 5/16" nut-driver and remove burner strap.
6. Place hex-body of spark plug into vise and tighten.
7. Remove spark plug mounting nut using 11/16" open-end wrench.
8. Remove burner strap from spark plug.
9. Clean and regap spark plug electrodes to 1.4 mm gap.
10. Replace burner strap onto spark plug. Rotate burner strap to position spark plug electrodes (see Figure 17).
11. Tighten spark plug with spark plug mounting nut.
12. Release hex-body of spark plug from vise.
13. Replace burner strap onto combustion chamber.
14. Attach spark plug wire to spark plug.
15. Attach fuel and air line hoses to nozzle assembly.
16. Replace fan (see page 19).
17. Replace fan guard and upper shell.

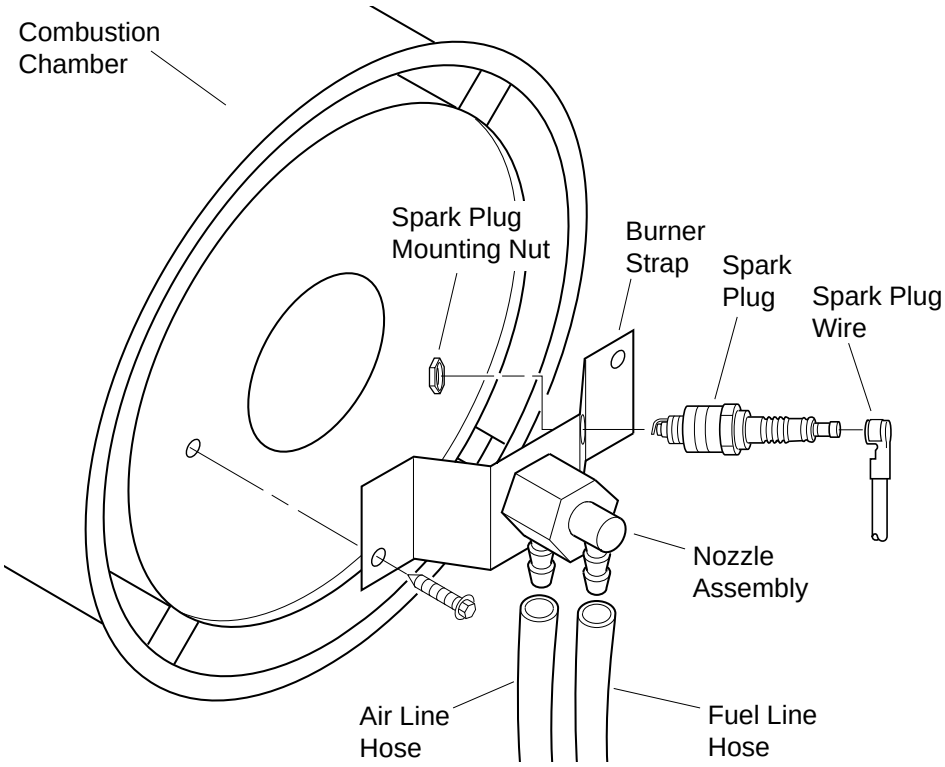


***Figure 15 - Spark Plug Removal, 30,000 BTU/Hr Model***

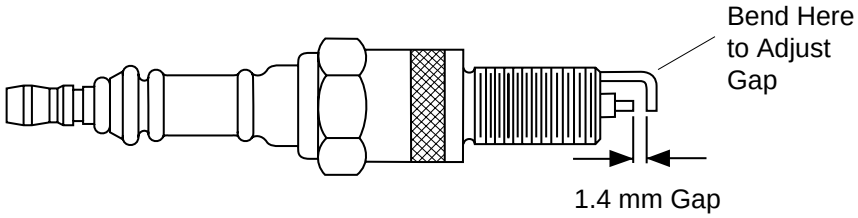


***Figure 16 - Spark Plug Gap, 30,000 BTU/Hr Model***

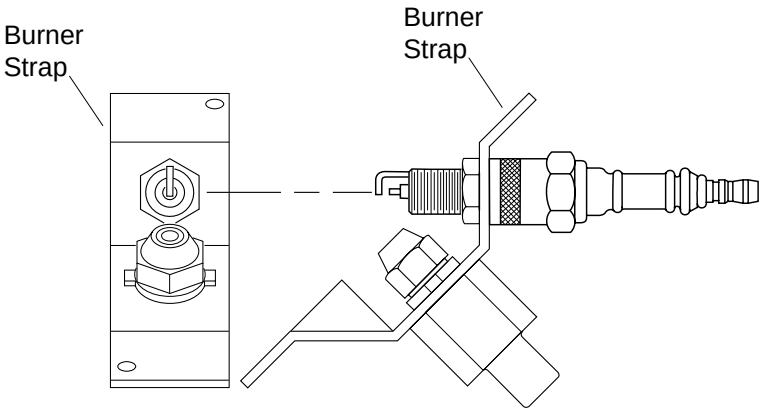


***Figure 17 - Spark Plug Rotation, 30,000 BTU/Hr Model Only***

## Spark Plug

**(70/90/150,000 BTU/Hr Models)**

1. Remove upper shell (see page 10).
2. Remove fan (see page 19).
3. Remove spark plug wire from spark plug.
4. Remove spark plug from burner head using 13/16" open-end wrench.
5. Clean and regap spark plug electrodes to 1.4 mm gap.
6. Install spark plug in burner head.
7. Attach spark plug wire to spark plug.
8. Replace fan (see page 19).
9. Replace fan guard and upper shell.

(70/90,000 BTU/Hr Model Shown)

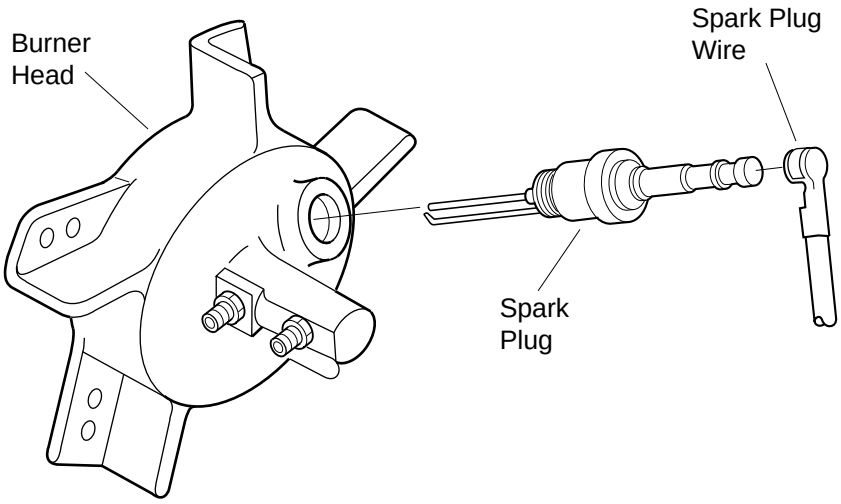


***Figure 18 - Spark Plug Removal, 70/90/150,000 BTU/Hr Models***

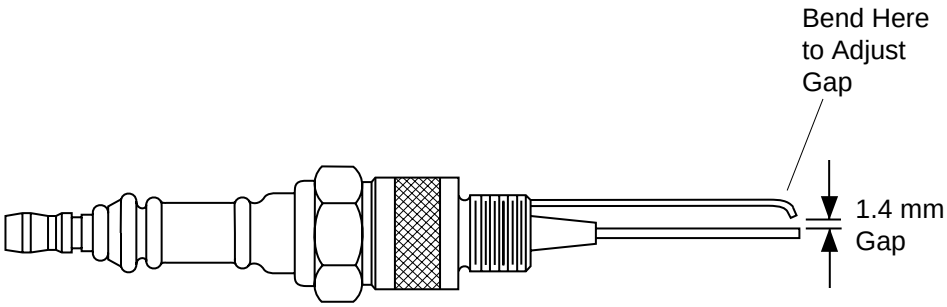


***Figure 19 - Spark Plug Gap, 70/90/150,000 BTU/Hr Models***

## Air Output, Air Intake, and Lint Filters

1. Remove upper shell (see page 10).
2. Remove filter end cover screws using 5/16" nut-driver.
3. Remove filter end cover.
4. Replace air output and lint filters.
5. Wash or replace air intake filter (see *Preventative Maintenance Schedule*, page 8).
6. Replace filter end cover.
7. Replace fan guard and upper shell.

*IMPORTANT:* Do not oil filters.

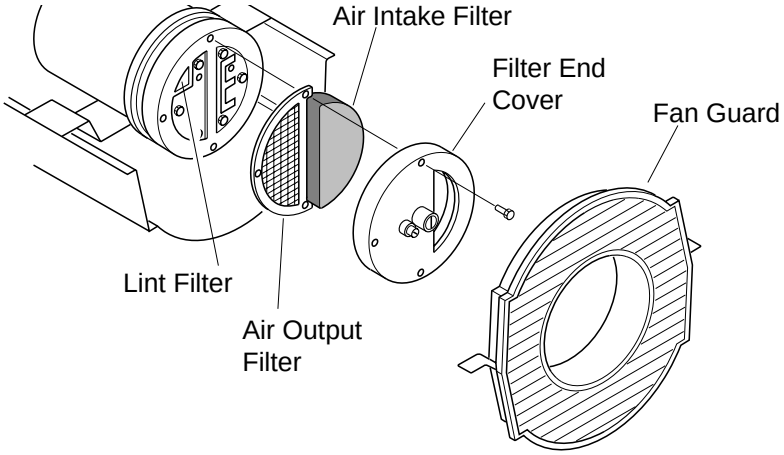


***Figure 20 - Air Output, Air Intake, and Lint Filters, 30/70,000 BTU/Hr Models***

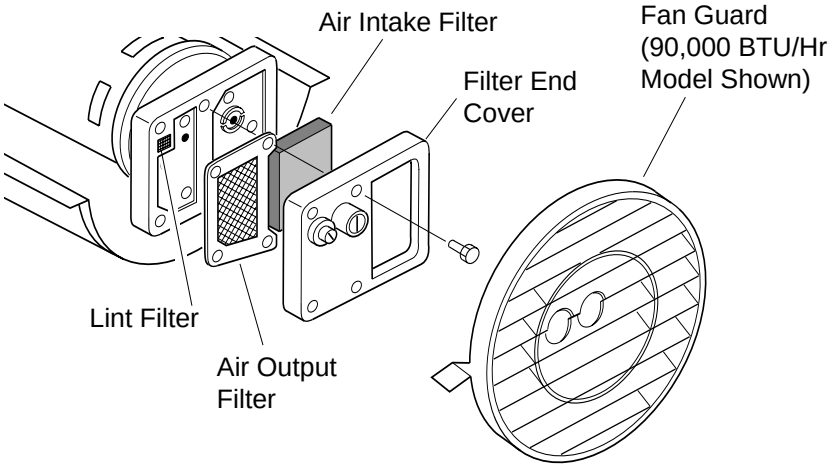


***Figure 21 - Air Output, Air Intake, and Lint Filters, 90/150,000 BTU/Hr Models***

## Pump Pressure Adjustment

1. Remove pressure gauge plug from filter end cover.
2. Install accessory pressure gauge (part number HA1180).
3. Start heater (see *Operation*, page 7). Allow motor to reach full speed.
4. Adjust pressure. Turn relief valve to right to increase pressure. Turn relief valve to left to decrease pressure. See specifications at right for correct pressure for each model.
5. Remove pressure gauge. Replace pressure gauge plug in filter end cover.

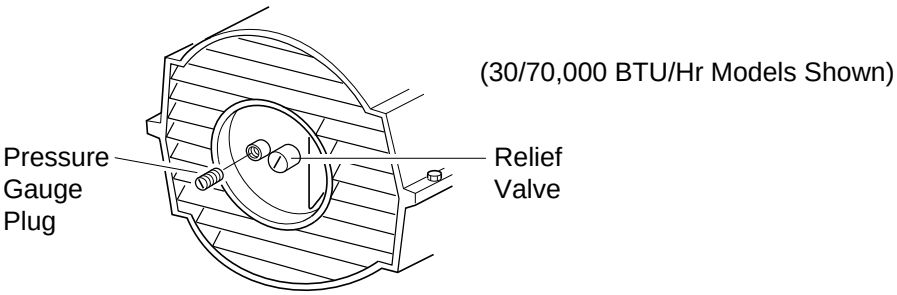


***Figure 22 - Pressure Gauge Plug Removal***

| Model | Pump Pressure |
|---|---|
| 30,000 BTU/Hr | 2.6 PSI |
| 70,000 BTU/Hr | 3.8 PSI |
| 90,000 BTU/Hr | 4.4 PSI |
| 150,000 BTU/Hr | 4.9 PSI |

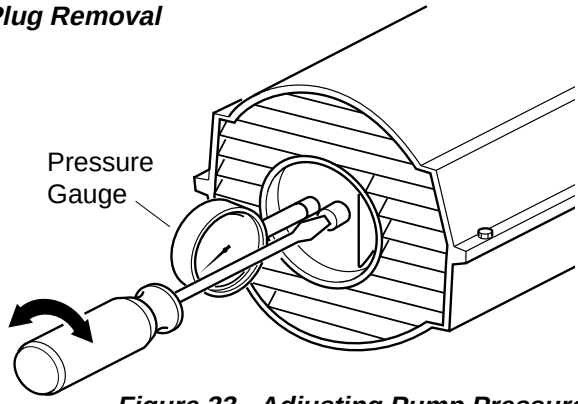


***Figure 23 - Adjusting Pump Pressure***

## Nozzle

**(30,000 BTU/Hr Model)**

1. Remove upper shell (see page 10).
2. Remove fan (see page 19).
3. Remove fuel and air line hoses from nozzle assembly.
4. Turn nozzle assembly 1/4 turn to left and pull toward motor to remove.
5. Place plastic hex-body into vise and lightly tighten.
6. Carefully remove nozzle from the nozzle adapter using 5/8" socket wrench.
7. Blow compressed air thru face of nozzle. This will free any dirt in nozzle area.
8. Inspect nozzle seal for damage.
9. Replace nozzle into nozzle adapter until nozzle seats. Tighten 1/3 turn more using 5/8" socket wrench (4.5-5.1 n-m).
10. Attach nozzle assembly to burner strap.
11. Attach fuel and air line hoses to nozzle assembly.
12. Replace fan (see page 19).
13. Replace fan guard and upper shell.

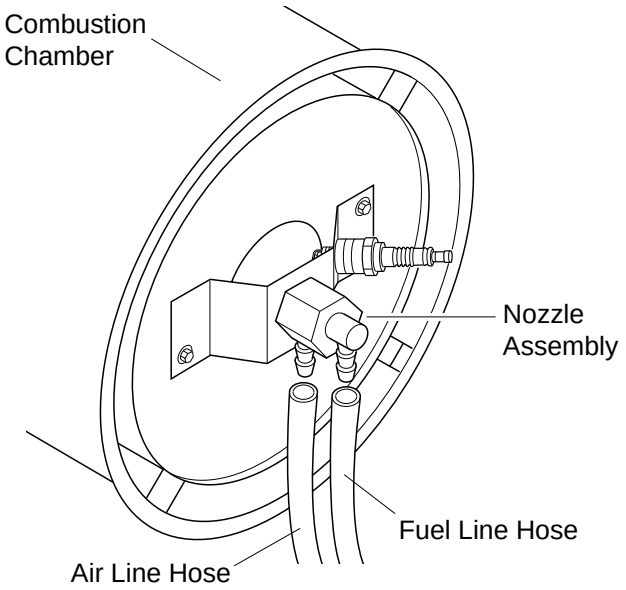


***Figure 24 - Removing Air and Fuel Line Hoses, 30,000 BTU/Hr Model***

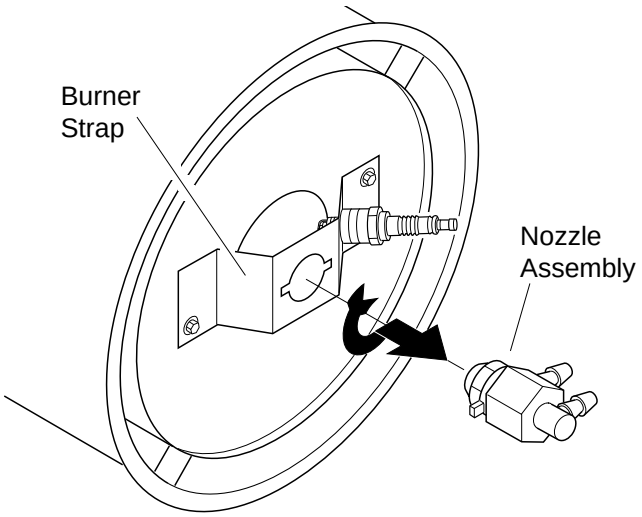


***Figure 25 - Removing Nozzle Assembly, 30,000 BTU/Hr Model***

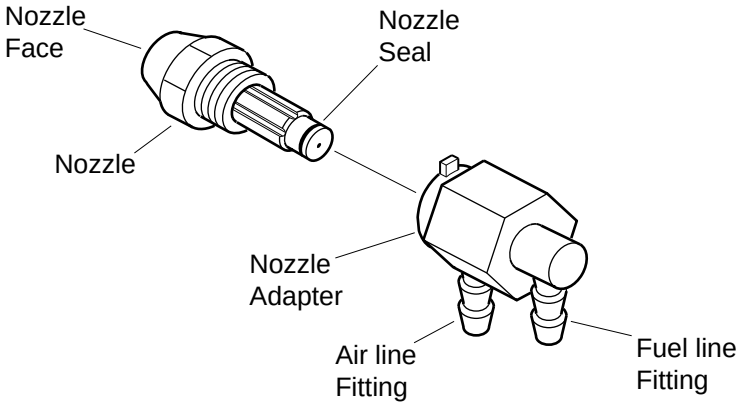


***Figure 26 - Nozzle and Nozzle Adapter, 30,000 BTU/Hr Model***

## Nozzle

**(70/90,000 BTU/Hr Models)**

1. Remove upper shell (see page 10).
2. Remove fan (see page 19).
3. Remove fuel and air line hoses from burner head.
4. Remove spark plug wire from spark plug.
5. Remove spark plug from burner head using 13/16" open-end wrench.
6. Remove three screws using 5/16" nut-driver and remove burner head from combustion chamber.
7. Place burner head into vise and lightly tighten.
8. Carefully remove nozzle from burner head using 5/8" socket wrench (see Figure 28).
9. Blow compressed air thru face of nozzle. This will free any dirt in nozzle area.
10. Inspect nozzle seal for damage.
11. Replace nozzle into burner head and tighten firmly (9.1-12.4 n-m).
12. Attach burner head to combustion chamber.
13. Install spark plug in burner head.
14. Attach spark plug wire to spark plug.
15. Attach fuel and air line hoses to burner head.
16. Replace fan (see page 19).
17. Replace fan guard and upper shell.

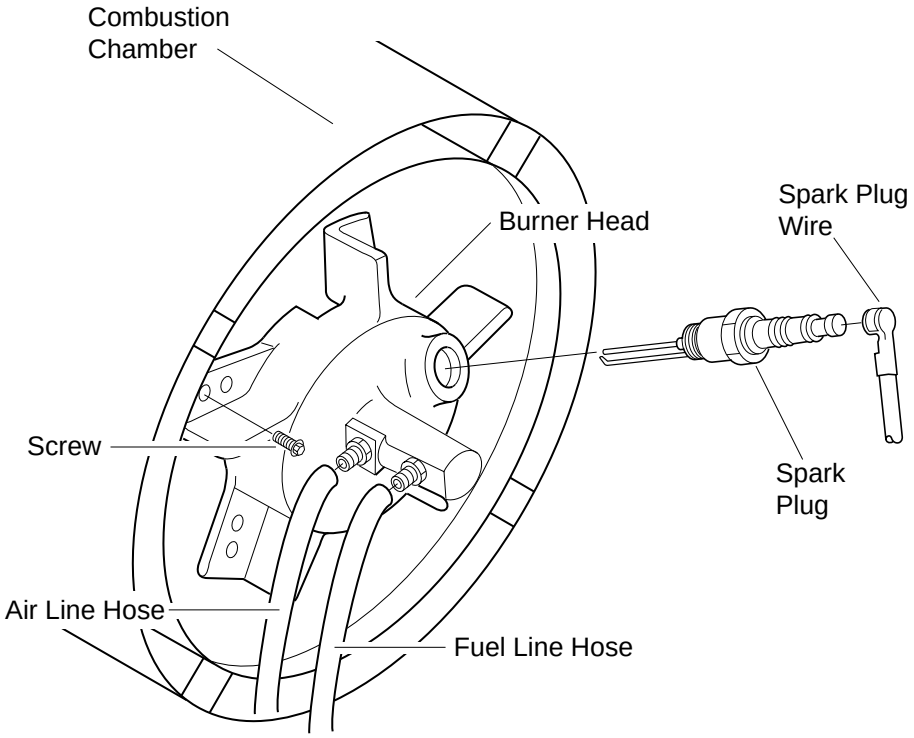


***Figure 27 - Removing Burner Head, 70/90,000 BTU/Hr Models***

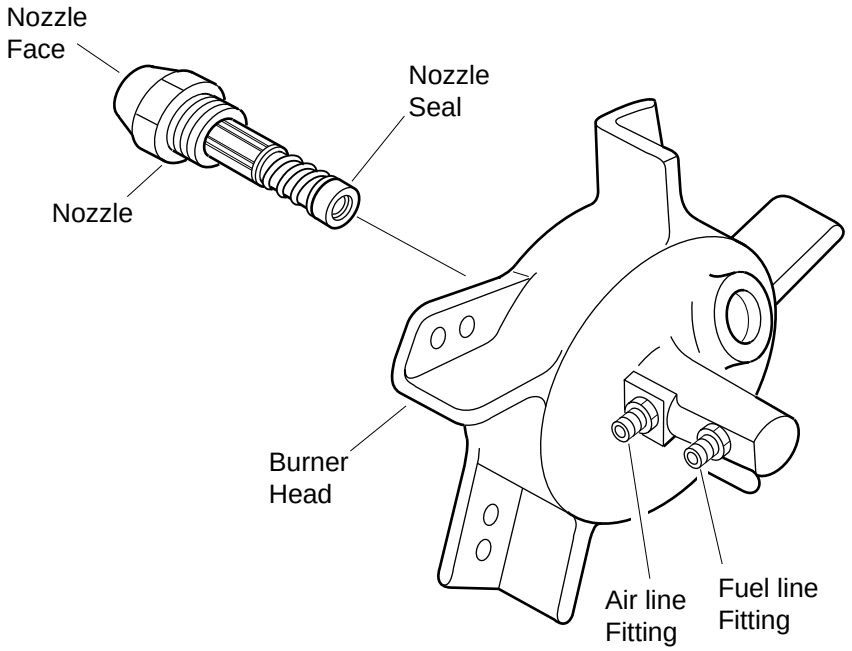


***Figure 28 - Removing Nozzle, 70/90,000 BTU/Hr Models***

## Nozzle

**(150,000 BTU/Hr Model)**

1. Remove upper shell (see page 10).
2. Remove fan (see page 19).
3. Remove spark plug wire from spark plug.
4. Remove spark plug from burner head using 13/16" open-end wrench.
5. Loosen flare nut using 3/4" open-end wrench. Push fuel tube down.
6. Remove air line hose from burner head.
7. Remove three screws using 5/16" nut-driver and remove burner head from combustion chamber.
8. Place burner head into vise and lightly tighten.
9. Carefully remove nozzle from burner head using 5/8" socket wrench (see Figure 30).
10. Blow compressed air thru face of nozzle. This will free any dirt in nozzle area.
11. Inspect nozzle seal for damage.
12. Replace nozzle into burner head and tighten firmly (9.1-12.4 n-m).
13. Attach burner head to combustion chamber.
14. Install spark plug in burner head.
15. Attach spark plug wire to spark plug.
16. Attach fuel tube and air line hose to burner head. Attach flare nut until nut seats against fuel tube and fitting. Tighten 1/4 turn more using 3/4" open-end wrench (11.3-14.7 n-m).
17. Replace fan (see page 19).
18. Replace fan guard and upper shell.

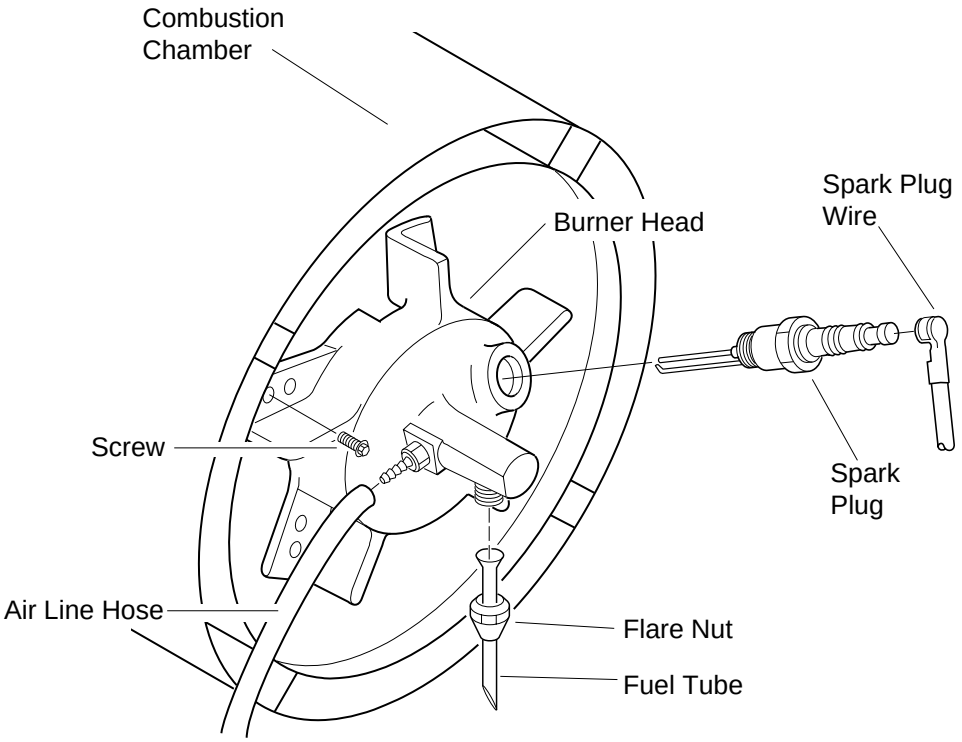


***Figure 29 - Removing Burner Head, 150,000 BTU/Hr Model***

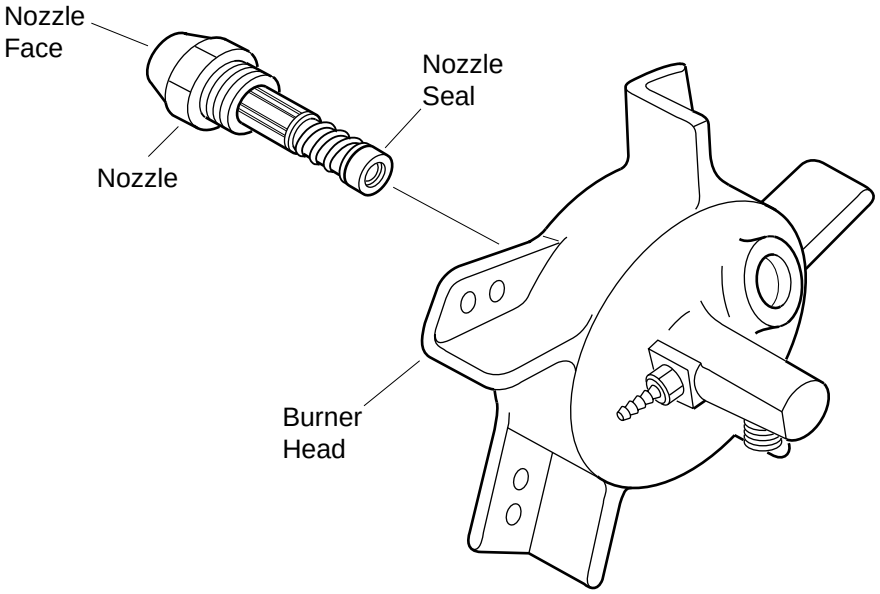


***Figure 30 - Removing Nozzle, 150,000 BTU/Hr Model***

## Pump Rotor

**(Procedure if rotor is binding)**

1. Remove upper shell (see page 10).
2. Remove filter end cover screws using 5/16" nut-driver.
3. Remove filter end cover and air filters.
4. Remove pump plate screws using 5/16" nut-driver.
5. Remove pump plate.
6. Remove rotor, insert, and blades.
7. Check for debris in pump. If debris is found, blow out with compressed air.
8. Install insert and rotor.
9. Check gap on rotor. Adjust to .076/.101 mm if needed (see Figure 33).

*Note:* Rotate rotor one full turn to insure the gap is .076/.101 mm at tightest position. Adjust if needed.

10. Install blades, pump plate, air filters, and filter end cover.
11. Replace fan guard and upper shell.
12. Adjust pump pressure (see page 14).

*Note:* If rotor is still binding, proceed as follows.

13. Perform steps 1 thru 6 above.
14. Place fine grade sandpaper (600 grit) on flat surface. Sand rotor lightly in “figure 8” motion four times (see Figure 34).
15. Reinstall insert and rotor.
16. Perform steps 10 thru 12 above.

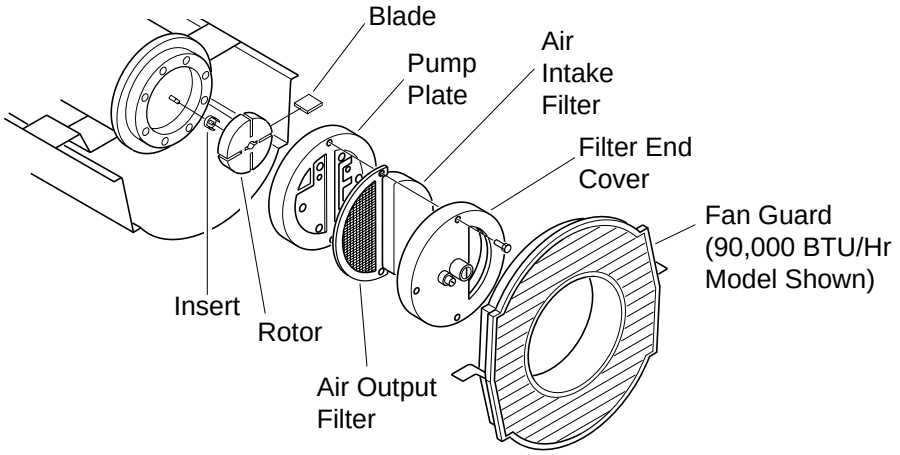


***Figure 31 - Rotor Location, 30/70,000 BTU/Hr Models***

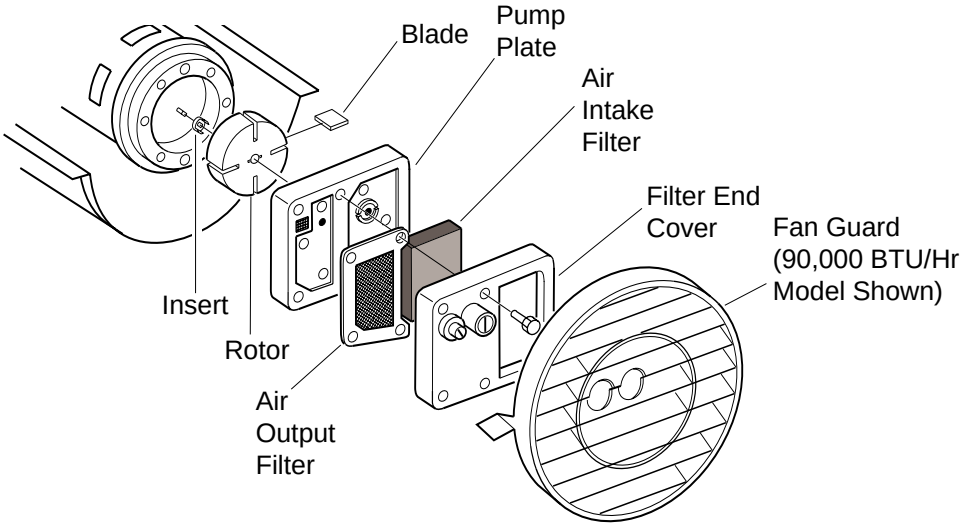


***Figure 32 - Rotor Location, 90/150,000 BTU/Hr Models***

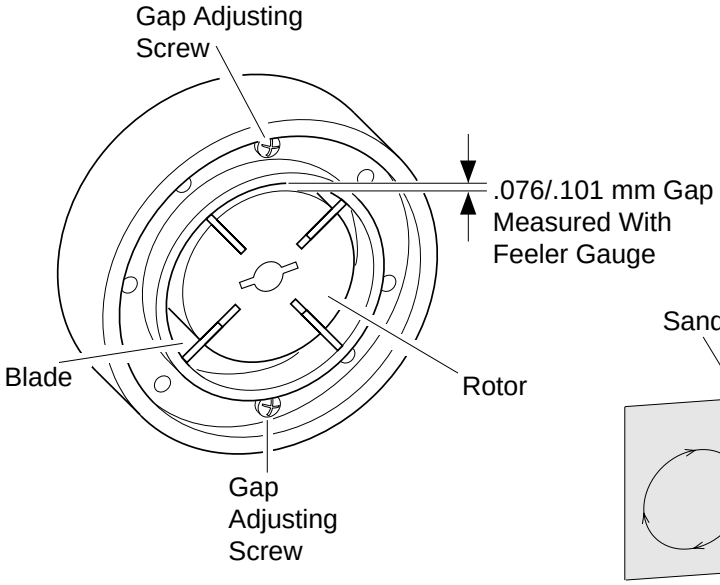


***Figure 33 - Gap Adjusting Screw Locations***

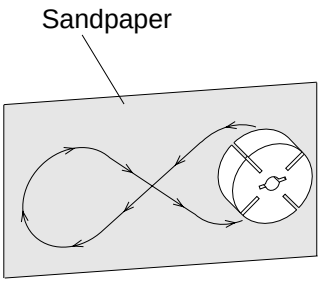


***Figure 34 - Sanding Rotor***

## Fan

*IMPORTANT:* Remove fan from motor shaft before removing motor from heater. The weight of the motor resting on the fan could damage the fan pitch.

1. Remove upper shell (see page 10).
2. Use 1/8" allen wrench to loosen setscrew which holds fan to motor shaft.
3. Slip fan off motor shaft.
4. Clean fan using a soft cloth moistened with kerosene or solvent.
5. Dry fan thoroughly.
6. Replace fan on motor shaft. Place fan hub flush with end of motor shaft (see Figure 36).
7. Place setscrew on flat of shaft. Tighten setscrew firmly (4.5-5.6 n-m).
8. Replace fan guard and upper shell.

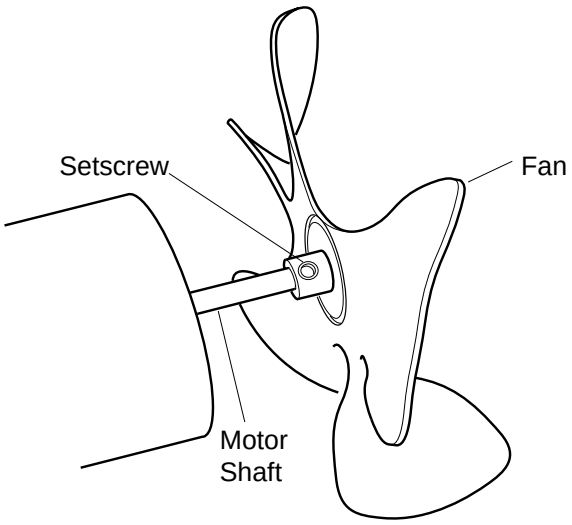


***Figure 35 - Fan, Motor Shaft, and Setscrew Location***

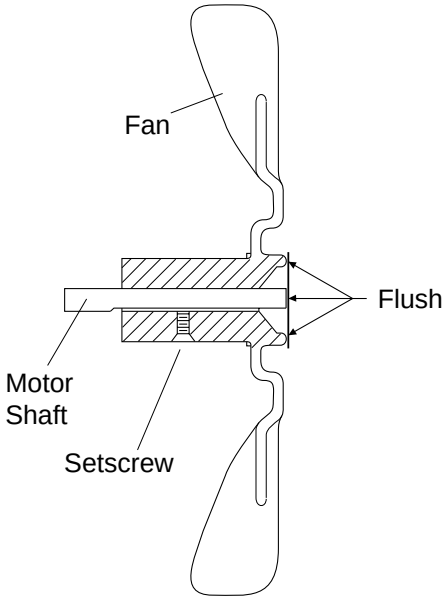


***Figure 36 - Fan Cross Section***

# SPECIFICATIONS

| | | | | |
|---|---|---|---|---|
| Output Rating (BTU/Hr) | 30,000 | 70,000 | 90,000 | 150,000 |
| Fuel | Use Only Kerosene or No. 1 Fuel Oil | | | |
| Fuel Tank Capacity (Liters) | 11.35 | 18.92 | 34.06 | 51.09 |
| Fuel Consumption (Liters Per Hr.) | .87 | 1.85 | 2.5 | 4.16 |
| Electric Requirements | 230V/50 Hz (Same All Models) | | | |
| Amperage (Normal Run) | .8 | 1.0 | 1.58 | 1.5 |
| Hot Air Output (CFM/CMM) | 140/3.96 | 225/6.36 | 425/12 | 600/17 |
| RPM | 1425 | 2850 | 2850 | 2850 |

# WIRING DIAGRAMS

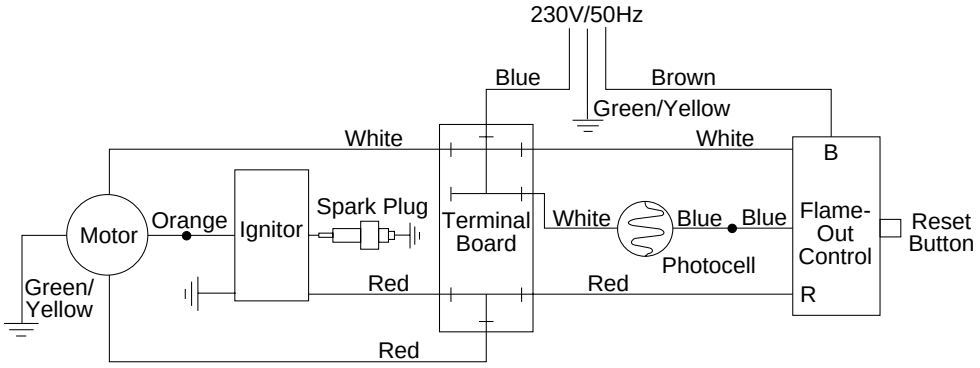


***Figure 37 - Wiring Diagram, 30,000 BTU/Hr Model***

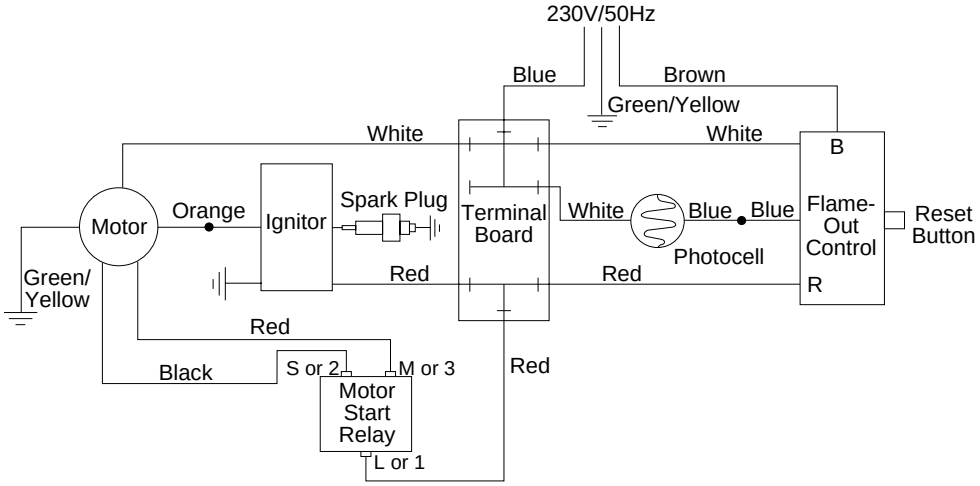


***Figure 38 - Wiring Diagram, 70/90,000 BTU/Hr Models***

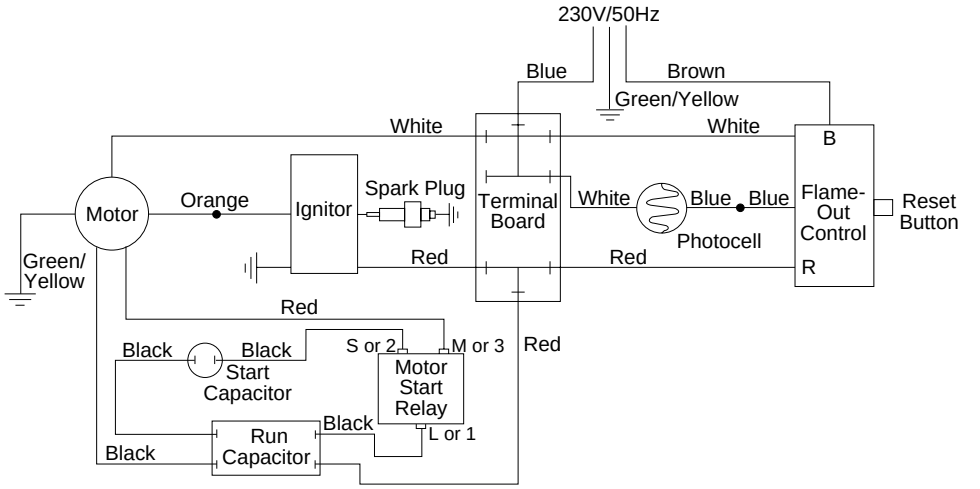


***Figure 39 - Wiring Diagram, 150,000 BTU/Hr Model***

# WHEELS AND HANDLES FOR 90,000 AND 150,000 BTU/Hr MODELS

| KEY NO. | PART NUMBER | PART DESCRIPTION | 90,000 QTY. | 150,000 QTY. |
|---|---|---|---|---|
| 1 | HA2203 | Handles | 2 | — |
| | HA2205 | Handles | — | 2 |
| 2 | M12345-33 | Screw, #10-24 x 1 3/4" | 8 | 8 |
| 3 | M12342-3 | Wheel Support Frame | 1 | — |
| | M12831-3 | Wheel Support Frame | — | 1 |
| 4 | NTC-3C | Hex Nut, #10-24 | 8 | 8 |
| 5 | 097896-01 | Wheel | 2 | 2 |
| 6 | M28526 | Cap Nut | 2 | 2 |
| 7 | M51015-01 | Axle | 1 | — |
| | M16801-2 | Axle | — | 1 |

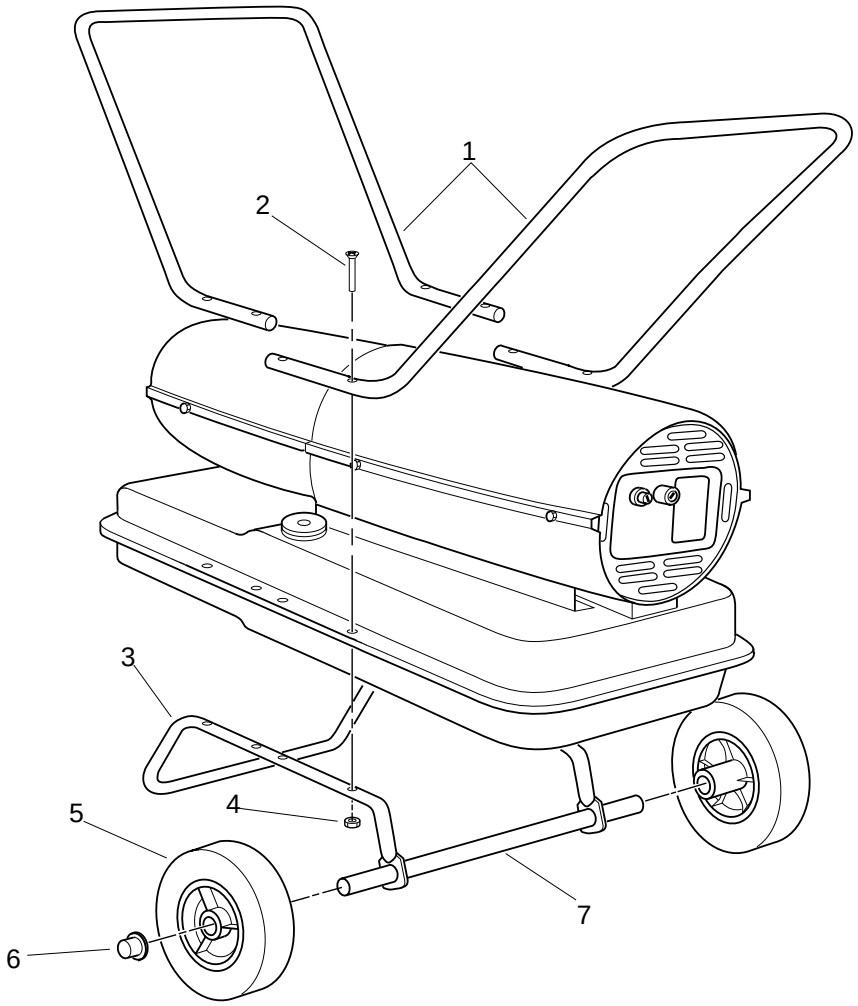

# ILLUSTRATED PARTS BREAKDOWN

**30,000 BTU/Hr**

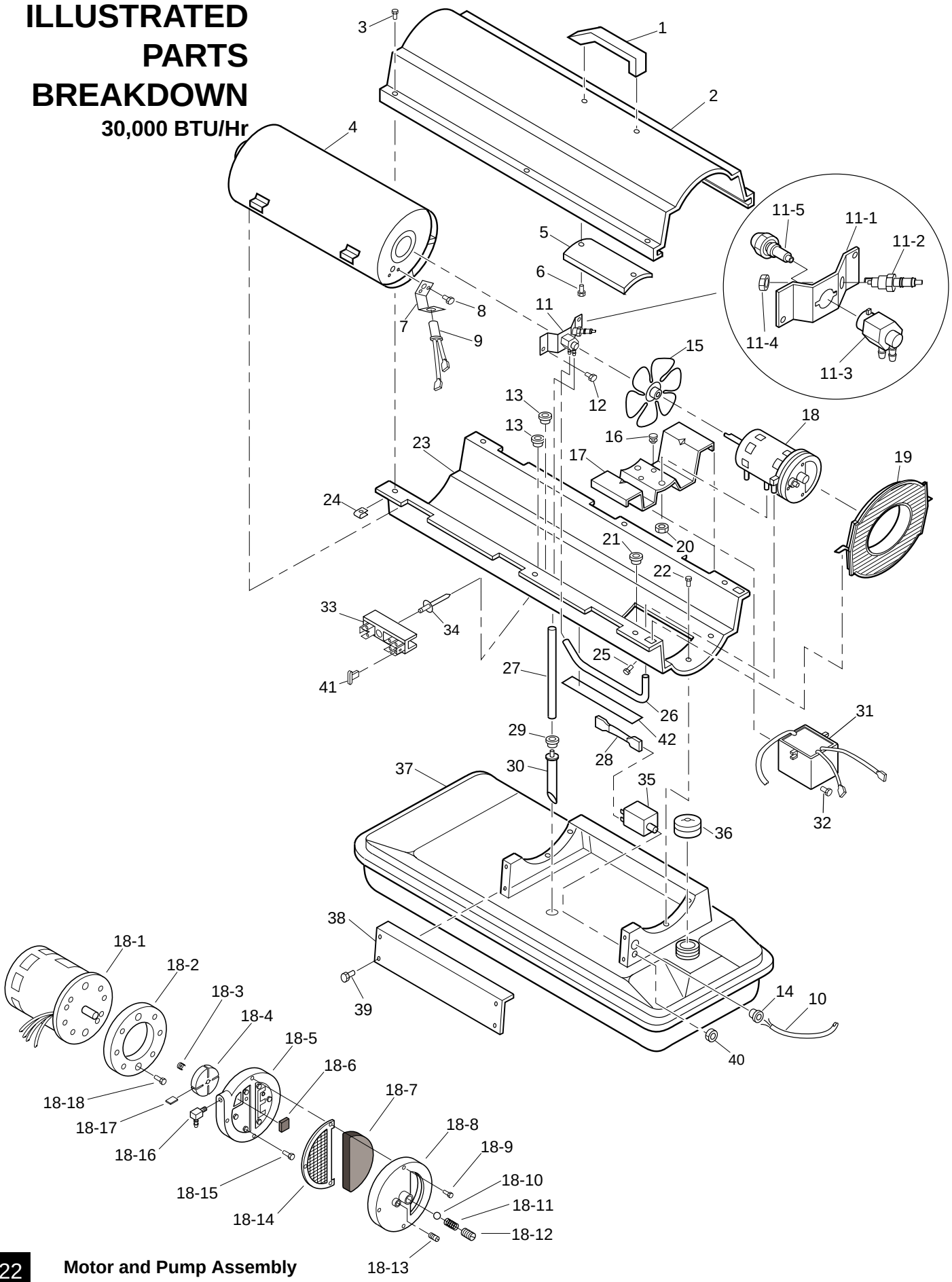


**Motor and Pump Assembly**

# PARTS LIST

## 30,000 BTU/Hr

This list contains replaceable parts used in your heater. When ordering parts, be sure to provide the correct model and serial numbers (from the model plate), then the part number and description of the desired part.

| KEY NO. | PART NUMBER | PART DESCRIPTION | QTY. |
|---|---|---|---|
| 1 | M51104-01 | Handle | 1 |
| 2 | 098511-173 | Upper Shell | 1 |
| 3 | M15823-27 | Screw, #10-16 x 1/2" | 6 |
| 4 | 098512-05 | Combustion Chamber | 1 |
| 5 | M51108-01 | Heat Shield | 1 |
| 6 | M11084-29 | Screw, #10-16 x 3/4" | 2 |
| 7 | M16660 | Photocell Bracket | 1 |
| 8 | M10908-2 | Screw, #6-32 x 3/8" | 2 |
| 9 | HA3019 | Photocell Assembly | 1 |
| 10 | 079673-03 | Power Cord | 1 |
| 11 | ** | Burner Strap Assembly | 1 |
| 11-1 | 097124-01 | Bracket | 1 |
| 11-2 | M29835-2 | Spark Plug | 1 |
| 11-3 | 079980-01 | Nozzle Adapter | 1 |
| 11-4 | M29824 | Nut, 14 mm | 1 |
| 11-5 | M29681 | Nozzle | 1 |
| 12 | M11084-26 | Screw, #10-16 x 3/8" | 2 |
| 13 | M30865-02 | Bushing | 2 |
| 14 | M11143-1 | Strain Relief Bushing | 1 |
| 15 | M30884 | Fan | 1 |
| 16 | M50631 | Rubber Bumper | 2 |
| 17 | 098138-01 | Motor Bracket | 1 |
| 18 | ** | Motor and Pump Assembly | 1 |
| 18-1 | 098642-02 | Motor (230V/50Hz) | 1 |
| 18-2 | M8645-2 | Pump Body | 1 |
| 18-3 | M22009 | Insert | 1 |
| 18-4 | M22456-2 | Rotor | 1 |
| 18-5 | M29608 | End Pump Cover | 1 |
| 18-6 | M29632 | Lint Filter | 1 |
| 18-7 | M29633 | Intake Filter | 1 |
| 18-8 | M29609 | End Filter Cover | 1 |
| 18-9 | M12461-31 | Screw, #10-32 x 1" | 3 |
| 18-10 | M8940 | Steel Ball (1/4" Diameter) | 1 |
| 18-11 | M10993-1 | Pressure Relief Spring | 1 |
| 18-12 | M27694 | Adjusting Screw | 1 |
| 18-13 | M22997 | Plug | 1 |
| 18-14 | M29612-01 | Output Filter | 1 |
| 18-15 | M12461-32 | Screw, #10-32 x 1 1/8" | 6 |
| 18-16 | M50016 | Elbow, 90˚ (Barb Fitting) | 1 |
| 18-17 | M8643-2 | Blade | 4 |
| 18-18 | FHPF3-6C | Screw, #10-32 x 3/4" | 2 |
| 19 | M51105-01 | Fan Guard | 1 |
| 20 | NTC-4C | Hex locknut | 2 |
| 21 | M50104-02 | Bushing (wires) | 1 |
| 22 | M11084-26 | Screw, #10-16 x 3/8" | 6 |
| 23 | 098511-122 | Lower Shell | 1 |
| 24 | M11271-8 | Clip Nut | 6 |
| 25 | M15823-37 | Screw, #8-18 x 1/4" | 1 |
| 26 | M29652-04 | Rubber Airline | 1 |
| 27 | M29652-05 | Fuel Line | 1 |
| 28 | M16841-57 | Wire Assembly (red 8 1/2") | 1 |
| 29 | M10990-3 | Rubber Bushing | 1 |
| 30 | M50876-04 | Fuel Filter Assembly (Includes bushing) | 1 |
| 31 | 098557-07 | Electronic Ignitor | 1 |
| 32 | M11084-29 | Screw, #10-16 x 3/4" | 2 |
| 33 | 099125-02 | Terminal Board | 1 |
| 34 | 099157-01 | Rivet | 1 |
| 35 | 097630-02 | Flame-Out Control | 1 |
| 36 | 097702-01 | Fuel Tank Cap | 1 |
| 37 | 098513-23 | Fuel Tank | 1 |
| 38 | M50899-03AA | Side Cover | 1 |
| 39 | M11084-26 | Screw, #10-16 x 3/8" | 2 |
| 40 | 099177-01 | Hex Nut | 1 |
| 41 | 078918-01 | Terminal Board Tab Cap | 1 |
| 42 | 097785-01 | Vinyl Foam Gasket | 1 |
| **PARTS AVAILABLE - NOT SHOWN** | | | |
| | M18053 | Filler Neck Screen | 1 |
| | 099798-01 | Tradename Decal | 2 |
| | 098234-37 | General Information Decal | 1 |

**Not available as an assembly, order parts separately.

# ILLUSTRATED PARTS BREAKDOWN

**70,000 BTU/Hr**

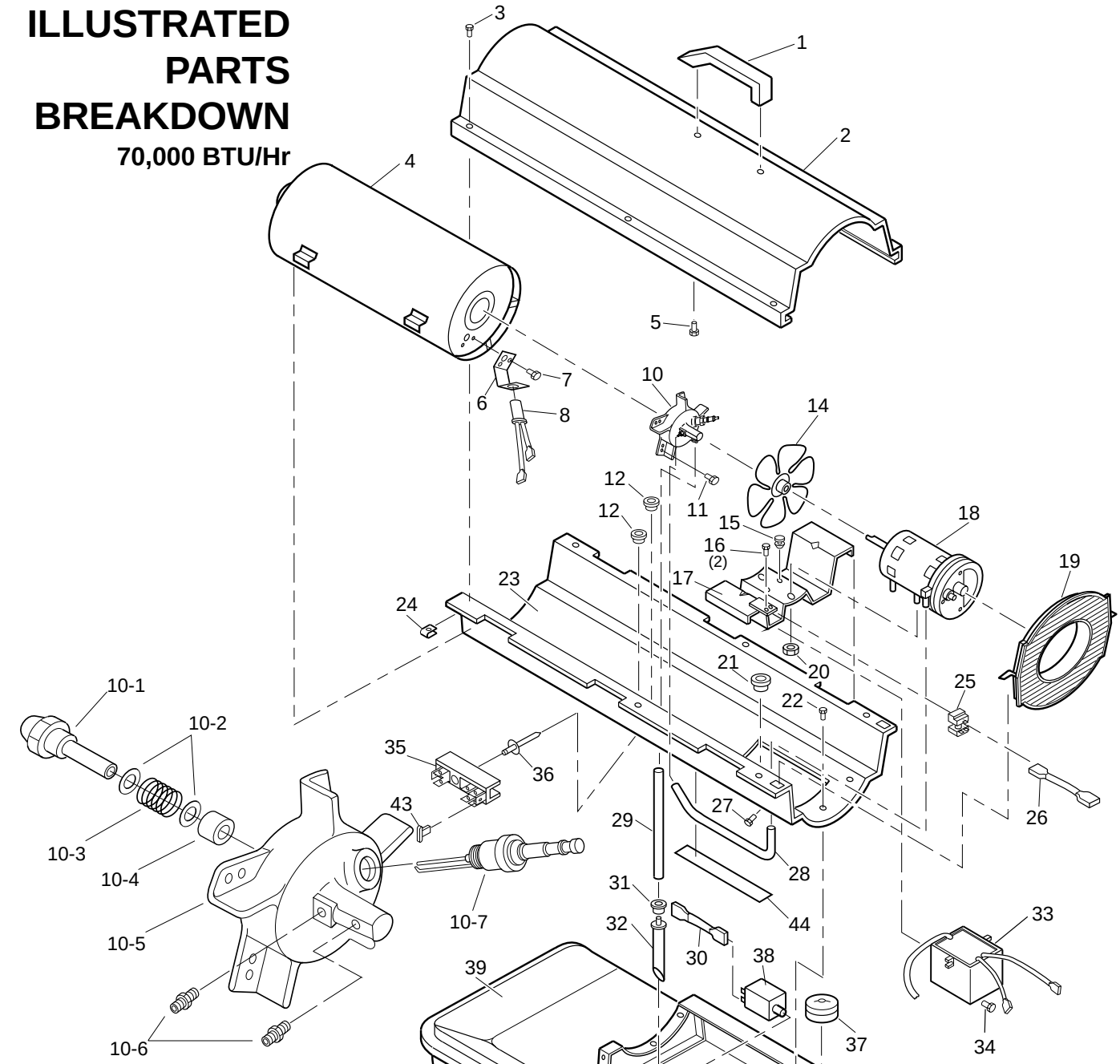


**Burner Head Assembly**

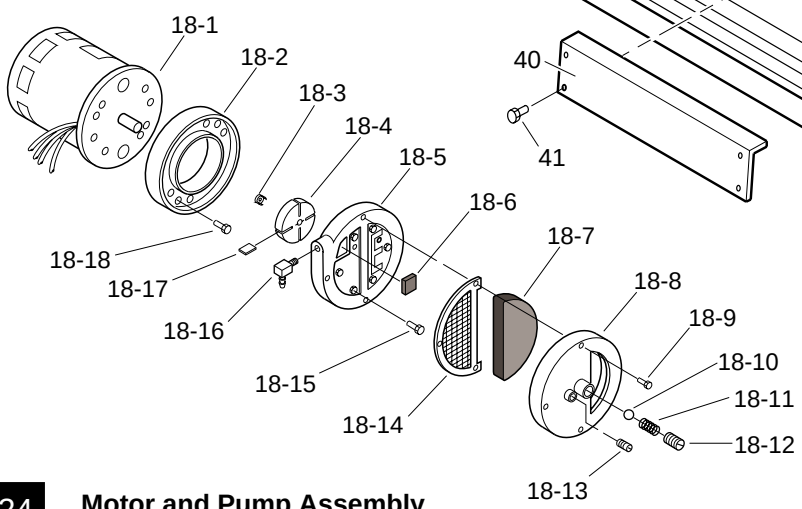


**Motor and Pump Assembly**

# PARTS LIST

## 70,000 BTU/Hr

This list contains replaceable parts used in your heater. When ordering parts, be sure to provide the correct model and serial numbers (from the model plate), then the part number and description of the desired part.

| KEY NO. | PART NUMBER | PART DESCRIPTION | QTY. |
|---|---|---|---|
| 1 | M51104-01 | Handle | 1 |
| 2 | 098511-173 | Upper Shell | 1 |
| 3 | M15823-27 | Screw, #10-16 x 1/2" | 6 |
| 4 | 098512-12 | Combustion Chamber | 1 |
| 5 | M11084-29 | Screw, #10-16 x 3/4" | 2 |
| 6 | M16660 | Photocell Bracket | 1 |
| 7 | M10908-2 | Screw, #6-32 x 3/8" | 2 |
| 8 | HA3019 | Photocell Assembly | 1 |
| 9 | 079673-03 | Power Cord | 1 |
| 10 | ** | Burner Head Assembly | 1 |
| 10-1 | M50880-01 | Nozzle | 1 |
| 10-2 | M10659-1 | Nozzle Seal Washer | 2 |
| 10-3 | M10809-1 | Nozzle Seal Spring | 1 |
| 10-4 | M8882 | Nozzle Seal Sleeve | 1 |
| 10-5 | M51098-02 | Burner Head Body | 1 |
| 10-6 | M50820-01 | Barb Fitting | 2 |
| 10-7 | M10962-2 | Spark Plug | 1 |
| 11 | M11084-27 | Screw, #10-16 x 1/2" | 3 |
| 12 | M30865-02 | Bushing | 2 |
| 13 | M11143-1 | Strain Relief Bushing | 1 |
| 14 | 097026-01 | Fan | 1 |
| 15 | M50631 | Rubber Bumper | 2 |
| 16 | M12461-13 | Screw, #8-32 x 1/4" (holds relay in position) | 2 |
| 17 | 098138-01 | Motor and Relay Bracket Assembly | 1 |
| 18 | ** | Motor and Pump Assembly | 1 |
| 18-1 | 098782-02 | Motor (230V/50Hz) | 1 |
| 18-2 | 079975-01 | Pump Body | 1 |
| 18-3 | M22009 | Insert | 1 |
| 18-4 | M22456-1 | Rotor | 1 |
| 18-5 | M29608 | End Pump Cover | 1 |
| 18-6 | M29632 | Lint Filter | 1 |
| 18-7 | M29633 | Intake Filter | 1 |
| 18-8 | M29609 | End Filter Cover | 1 |
| 18-9 | M12461-31 | Screw, #10-32 x 1" | 3 |
| 18-10 | M8940 | Steel Ball (1/4" Diameter) | 1 |
| 18-11 | M10993-1 | Pressure Relief Spring | 1 |
| 18-12 | M27694 | Adjusting Screw | 1 |
| 18-13 | M22997 | Plug | 1 |
| 18-14 | M29612-01 | Output Filter | 1 |
| 18-15 | M12461-31 | Screw, #10-32 x 1" | 6 |
| 18-16 | M50016 | Elbow, 90° (Barb Fitting) | 1 |
| 18-17 | M8643 | Blade | 4 |
| 18-18 | FHPF3-2C | Screw, #10-32 x 1/4" | 2 |
| 19 | M51105-01 | Fan Guard | 1 |
| 20 | NTC-4C | Hex locknut | 2 |
| 21 | M50104-02 | Bushing (wires) | 1 |
| 22 | M11084-26 | Screw, #10-16 x 3/8" | 6 |
| 23 | 098511-122 | Lower Shell | 1 |
| 24 | M11271-8 | Clip Nut | 6 |
| 25 | 098136-02 | Relay (motor start) | 1 |
| 26 | M16841-58 | Wire Assembly (red 9 1/2") | 1 |
| 27 | M15823-37 | Screw, #8-18 x 1/4" | 1 |
| 28 | M29652-04 | Rubber Airline | 1 |
| 29 | 079973-01 | Fuel Line | 1 |
| 30 | M16841-57 | Wire Assembly (red 8 1/2") | 1 |
| 31 | M10990-3 | Rubber Bushing | 1 |
| 32 | M50876-05 | Fuel Filter Assembly (Includes bushing) | 1 |
| 33 | 098557-07 | Electronic Ignitor | 1 |
| 34 | M11084-29 | Screw, #10-16 x 3/4" | 2 |
| 35 | 099125-02 | Terminal Board | 1 |
| 36 | 099157-01 | Rivet | 1 |
| 37 | 097702-01 | Fuel Tank Cap | 1 |
| 38 | 097630-02 | Flame-Out Control | 1 |
| 39 | 098513-24 | Fuel Tank | 1 |
| 40 | M50899-03AA | Side Cover | 1 |
| 41 | M11084-26 | Screw, #10-16 x 3/8" | 2 |
| 42 | 099177-01 | Hex Nut | 1 |
| 43 | 078918-01 | Terminal Board Tab Cap | 1 |
| 44 | 097785-01 | Vinyl Foam Gasket | 1 |
| **PARTS AVAILABLE - NOT SHOWN** | | | |
| | M18053 | Filler Neck Screen | 1 |
| | 099798-01 | Tradename Decal | 2 |
| | 098234-38 | General Information Decal | 1 |

**Not available as an assembly, order parts separately.

# ILLUSTRATED PARTS BREAKDOWN

**90,000 BTU/Hr**

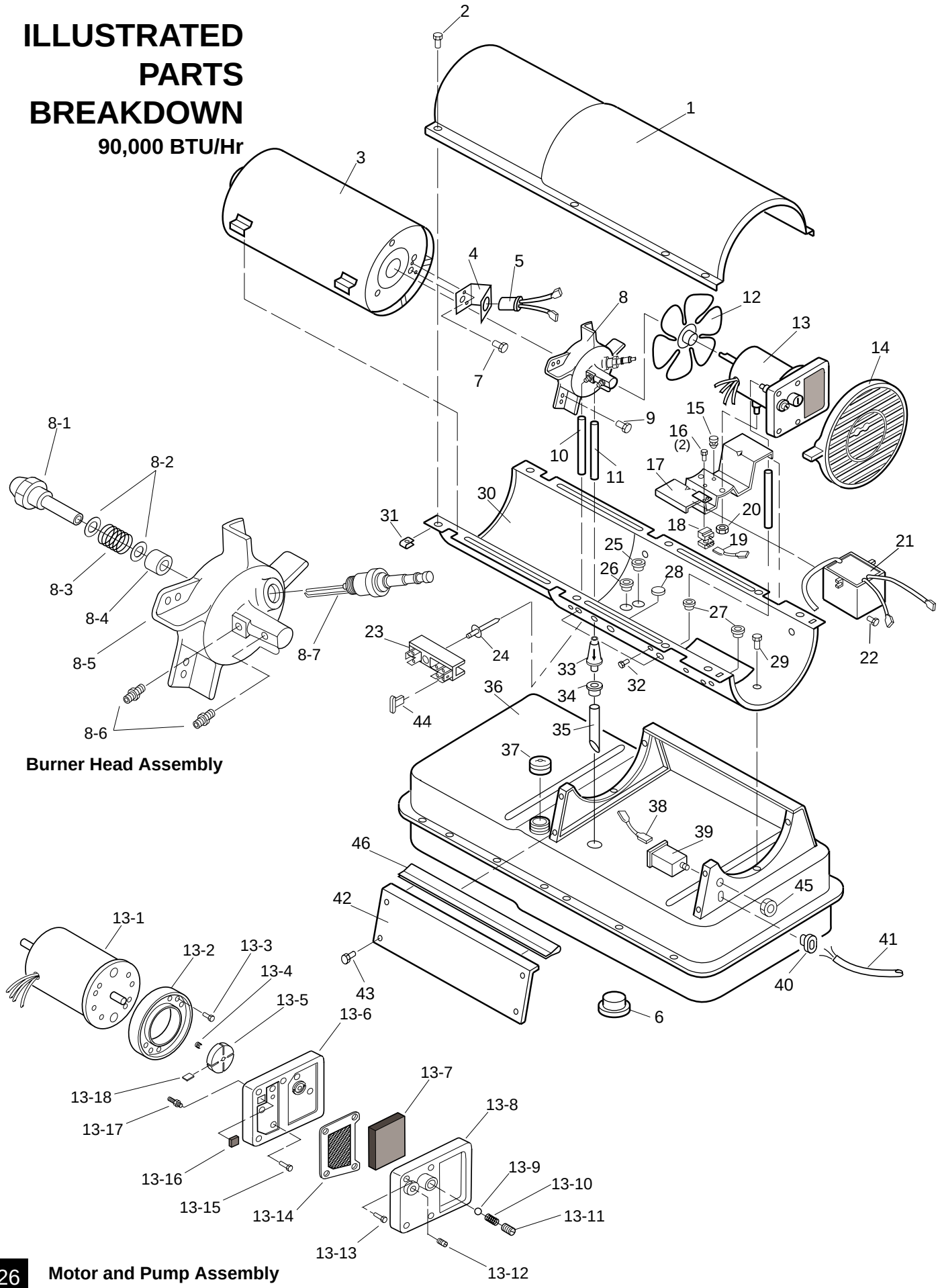


**Burner Head Assembly**

**Motor and Pump Assembly**

# PARTS LIST

## 90,000 BTU/Hr

This list contains replaceable parts used in your heater. When ordering parts, be sure to provide the correct model and serial numbers (from the model plate), then the part number and description of the desired part.

| KEY NO. | PART NUMBER | PART DESCRIPTION | QTY. |
|---|---|---|---|
| 1 | 098511-124 | Upper Shell | 1 |
| 2 | M15823-27 | Screw, #10-16 x 1/2" | 6 |
| 3 | 098512-07 | Combustion Chamber | 1 |
| 4 | M16660 | Photocell Bracket | 1 |
| 5 | HA3019 | Photocell Assembly | 1 |
| 6 | M27417 | Drain Plug | 1 |
| 7 | M10908-2 | Screw, #6-32 x 3/8" | 2 |
| 8 | ** | Burner Head Assembly | 1 |
| 8-1 | M23103 | Nozzle | 1 |
| 8-2 | M10659-1 | Nozzle Seal Washer | 2 |
| 8-3 | M10809-1 | Nozzle Seal Spring | 1 |
| 8-4 | M8882 | Nozzle Seal Sleeve | 1 |
| 8-5 | M50924-03 | Burner Head Body | 1 |
| 8-6 | M50820-02 | Barb Fitting | 2 |
| 8-7 | M10962-2 | Spark Plug | 1 |
| 9 | M11084-27 | Screw, #10-16 x 1/2" | 3 |
| 10 | M50814-06 | Air Line | 1 |
| 11 | M51345-01 | Fuel Line | 1 |
| 12 | 097293-01 | Fan | 1 |
| 13 | ** | Motor and Pump Assembly | 1 |
| 13-1 | 098783-02 | Motor (230V/50Hz) | 1 |
| 13-2 | 079975-01 | Pump Body | 1 |
| 13-3 | FHPF3-2C | Screw, #10-32 x 1/4" | 2 |
| 13-4 | M22009 | Insert | 1 |
| 13-5 | M22456-1 | Rotor | 1 |
| 13-6 | M50545 | End Pump Cover | 1 |
| 13-7 | M12179 | Intake Filter | 1 |
| 13-8 | M16545 | End Filter Cover | 1 |
| 13-9 | M8940 | Steel Ball (1/4" Diameter) | 1 |
| 13-10 | M10993-1 | Pressure Relief Spring | 1 |
| 13-11 | M27694 | Adjusting Screw | 1 |
| 13-12 | M22997 | Plug | 1 |
| 13-13 | M12461-31 | Screw, #10-32 x 1" | 4 |
| 13-14 | M12244-1 | Output Filter | 1 |
| 13-15 | M12461-31 | Screw, #10-32 x 1" | 6 |
| 13-16 | M11637 | Lint Filter | 1 |
| 13-17 | M50820-02 | Barb Fitting | 1 |
| 13-18 | M8643 | Blade | 4 |
| 14 | M51114-01 | Fan Guard | 1 |

| KEY NO. | PART NUMBER | PART DESCRIPTION | QTY. |
|---|---|---|---|
| 15 | M50631 | Rubber Bumper | 2 |
| 16 | M12461-13 | Screw, #8-32 x 1/4" | 2 |
| 17 | 098138-02 | Motor and Relay Bracket Assembly | 1 |
| 18 | 098136-04 | Relay (motor start) | 1 |
| 19 | M16841-59 | Wire Assembly (red 13 1/2") | 1 |
| 20 | NTC-4C | Hex locknut | 2 |
| 21 | 098557-07 | Electronic Ignitor | 1 |
| 22 | M11084-29 | Screw, #10-16 x 3/4" | 2 |
| 23 | 099125-02 | Terminal Board | 1 |
| 24 | 099157-01 | Rivet | 1 |
| 25 | M50104-03 | Bushing | 1 |
| 26 | M50104-03 | Bushing | 1 |
| 27 | M50104-01 | Bushing | 2 |
| 28 | 099213-01 | Button Plug | 1 |
| 29 | M11084-27 | Screw, #10-16 x 1/2" | 6 |
| 30 | 098511-154 | Lower Shell | 1 |
| 31 | M11271-8 | Clip Nut | 6 |
| 32 | M15823-37 | Screw, #8-18 x 1/4" | 1 |
| 33 | M51150-01 | Fuel filter | 1 |
| 34 | M10990-3 | Rubber Bushing | 1 |
| 35 | M51151-01 | Fuel Line | 1 |
| 36 | 098513-21 | Fuel Tank | 1 |
| 37 | 097702-01 | Fuel Tank Cap | 1 |
| 38 | M16841-57 | Wire Assembly (red 8 1/2") | 1 |
| 39 | 097630-02 | Flame-Out Control | 1 |
| 40 | M11143-1 | Strain Relief Bushing | 1 |
| 41 | 079673-03 | Power Cord | 1 |
| 42 | M51077-01AA | Side Cover | 1 |
| 43 | M11084-27 | Screw, #10-16 x 1/2" | 4 |
| 44 | 078918-01 | Terminal Board Tab Cap | 1 |
| 45 | 099177-01 | Hex Nut | 1 |
| 46 | 097468-01 | Edge Liner | 1 |
| **PARTS AVAILABLE - NOT SHOWN** | | | |
| | M18053 | Filler Neck Screen | 1 |
| | 099798-02 | Tradename Decal | 2 |
| | 098234-39 | General Information Decal | 1 |

**Not available as an assembly, order parts separately.

# ILLUSTRATED PARTS BREAKDOWN

**150,000 BTU/Hr**

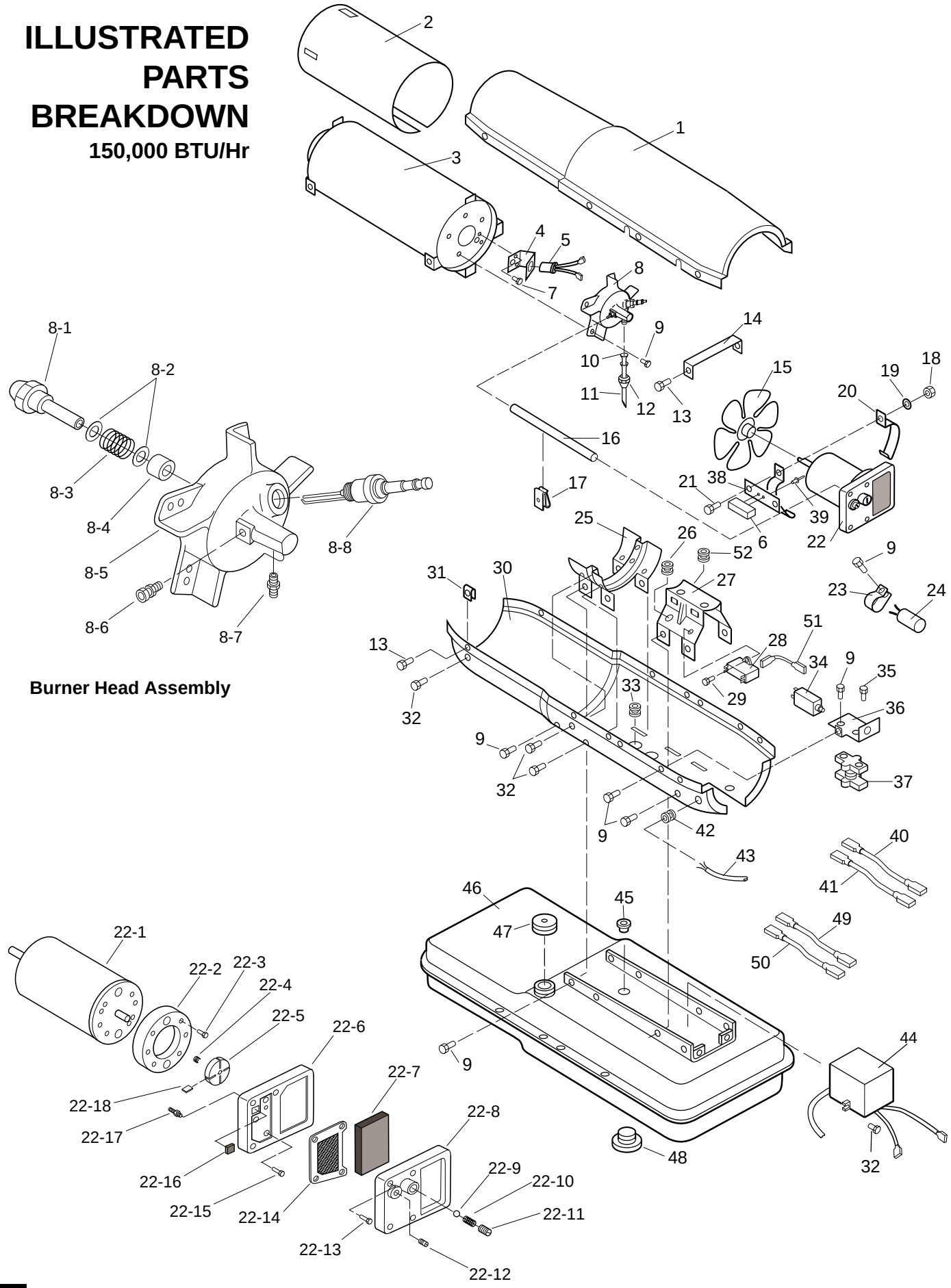


**Burner Head Assembly**

**Motor and Pump Assembly**

# PARTS LIST

**150,000 BTU/Hr**

This list contains replaceable parts used in your heater. When ordering parts, be sure to provide the correct model and serial numbers (from the model plate), then the part number and description of the desired part.

| KEY NO. | PART NUMBER | PART DESCRIPTION | QTY. |
|---|---|---|---|
| 1 | 098511-175 | Upper Shell | 1 |
| 2 | 098068-01 | Heat Deflector | 1 |
| 3 | 098512-02 | Combustion Chamber | 1 |
| 4 | M16660 | Photocell Bracket | 1 |
| 5 | HA3019 | Photocell Assembly | 1 |
| 6 | 099125-02 | Terminal Board | 1 |
| 7 | M10908-2 | Screw, #6-32 x 3/8" | 2 |
| 8 | ** | Burner Head Assembly | 1 |
| 8-1 | M18022 | Nozzle | 1 |
| 8-2 | M10659-1 | Nozzle Seal Washer | 2 |
| 8-3 | M10809-1 | Nozzle Seal Spring | 1 |
| 8-4 | M8882 | Nozzle Seal Sleeve | 1 |
| 8-5 | M50924-01 | Burner Head Body | 1 |
| 8-6 | M50820-02 | Barb Fitting | 1 |
| 8-7 | 079685-01 | Male Connector | 1 |
| 8-8 | M10962-2 | Spark Plug | 1 |
| 9 | M11084-27 | Screw, #10-16 x 1/2" | 18 |
| 10 | M19630 | Fuel Filter | 1 |
| 11 | M16790-12 | Fuel Tube | 1 |
| 12 | M50660-05 | Flared 45° Nut | 1 |
| 13 | M15823-27 | Screw, #10-16 x 1/2" | 10 |
| 14 | M16871 | Retainer Strap | 1 |
| 15 | M17920 | Fan | 1 |
| 16 | M50814-03 | Air Line | 1 |
| 17 | M50873-01 | Clip | 9 |
| 18 | NPC-4C | Hex Nut, 1/4-20 | 2 |
| 19 | WLM-4C | Lockwasher, 1/4" | 2 |
| 20 | M16661 | Motor Clamp | 4 |
| 21 | M51043-01 | Bolt, 1/4-20 x 1 1/2" | 2 |
| 22 | ** | Motor and Pump Assembly | 1 |
| 22-1 | 098784-02 | Motor (230V/50Hz) | 1 |
| 22-2 | M8645-3 | Pump Body | 1 |
| 22-3 | FHPF3-7C | Screw, #10-32 x 7/8" | 2 |
| 22-4 | M22009 | Insert | 1 |
| 22-5 | M22456-3 | Rotor | 1 |
| 22-6 | M50545 | End Pump Cover | 1 |
| 22-7 | M12179 | Intake Filter | 1 |
| 22-8 | M16545 | End Filter Cover | 1 |
| 22-9 | M8940 | Steel Ball (1/4" Diameter) | 1 |
| 22-10 | M10993-1 | Pressure Relief Spring | 1 |
| 22-11 | M27694 | Adjusting Screw | 1 |
| 22-12 | M22997 | Plug | 1 |
| 22-13 | M12461-31 | Screw, #10-32 x 1" | 4 |
| 22-15 | M12461-34 | Screw, #10-32 x 1 1/2" | 6 |
| 22-16 | M11637 | Lint Filter | 1 |
| 22-17 | M50820-02 | Barb Fitting | 1 |
| 22-18 | M8643-3 | Blade | 4 |
| 23 | M12651-1 | Capacitor Clamp | 1 |
| 24 | M12650-3 | Capacitor | 1 |
| 25 | M12828 | Shell Support Bracket | 1 |
| 26 | M30865-04 | Open/Closed Bushing | 1 |
| 27 | M16645 | Motor Support Bracket | 1 |
| 28 | M51357-01 | Capacitor (Run) | 1 |
| 29 | M15823-39 | Screw, #8-18 x 1/2" | 1 |
| 30 | 098511-174 | Lower Shell | 1 |
| 31 | M11271-8 | Nut Clip | 9 |
| 32 | M11084-29 | Screw, #10-16 x 3/4" | 8 |
| 33 | M50104-03 | Shorty Bushing | 2 |
| 34 | 097630-02 | Flame-Out Control | 1 |
| 35 | M12461-13 | Screw, #8-32 x 1/4" | 2 |
| 36 | 097060-01 | Mounting Bracket | 1 |
| 37 | M12462-13 | Relay-Motor Start | 1 |
| 38 | 099607-01 | Terminal Board Bracket | 1 |
| 39 | 099157-01 | Rivet | 1 |
| 40 | M9900-183 | Wire Assembly (black 6") | 1 |
| 41 | M9900-184 | Wire Assembly (black 15") | 1 |
| 42 | M11143-1 | Strain Relief Bushing | 1 |
| 43 | 079673-03 | Power Cord | 1 |
| 44 | 098557-07 | Electronic Ignitor | 1 |
| 45 | M10990-3 | Rubber Bushing | 1 |
| 46 | 098513-08 | Fuel Tank | 1 |
| 47 | 097702-01 | Fuel Tank Cap | 1 |
| 48 | M27417 | Drain Plug | 1 |
| 49 | 079010-14 | Wire Assembly (red 8 7/8") | 1 |
| 50 | M9900-77 | Wire Assembly (black 15") | 1 |
| 51 | M16841-57 | Wire Assembly (red 8 1/2") | 1 |
| 52 | M30865-02 | Open/Closed Bushing | 1 |
| **PARTS AVAILABLE - NOT SHOWN** | | | |
| | M50140 | Fan Guard | 1 |
| | 099798-02 | Tradename Decal | 2 |
| | M18053 | Filler Neck Screen | 1 |
| | 098235-17 | General Information Decal | 1 |
| | 078918-01 | Terminal Board Tab Cap | 1 |

**Not available as an assembly, order parts separately.

# ACCESSORIES

Purchase accessories from your local dealer.

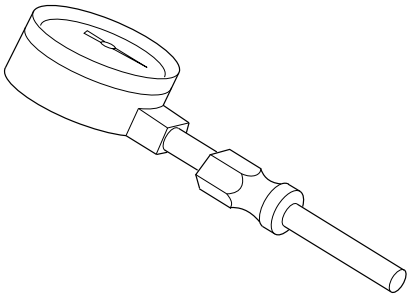

**AIR GAUGE KIT - HA1180**
For all models. Special tool to check pump pressure.

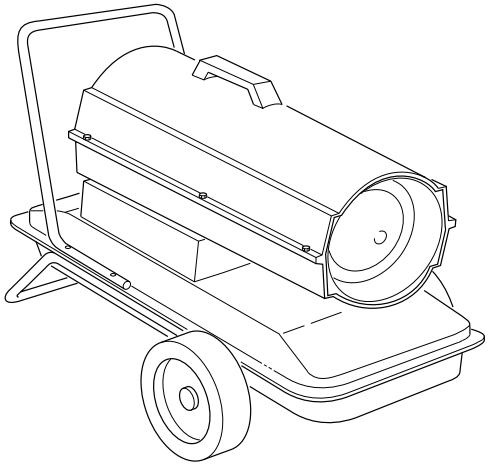

**HEAVY DUTY WHEELS AND HANDLE KIT - HA1202**
For heavy duty applications. Makes your heater even more portable and convenient. For 30/70,000 BTU/Hr models.

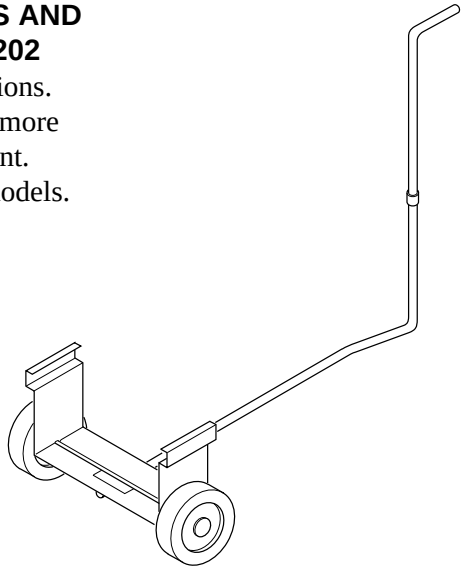

**STANDARD WHEELS AND HANDLE KIT - HA1206**
Makes heater even more portable and convenient. Easy to assemble. For 30/70,000 BTU/Hr models.

## NOTES

# WARRANTY AND REPAIR SERVICE

## CERTIFICATE OF GENERAL EQUIPMENT - LIMITED 90 DAY WARRANTY

Power Tools S.A. warrants new Products sold by it to be free from defects in material or workmanship for a period of ninety days after date of delivery to the first user and subject to the following conditions:

Power Tools S.A.'s obligation and liability under this Warranty is expressly limited to repairing or replacing at Power Tools S.A.'s option, any parts which appear to Power Tools S.A. upon inspection to have been defective in material or workmanship when shipped from the factory. Such parts shall be provided at no cost to the user, at the business establishment of any factory authorized service center or the factory during regular working hours. The Warranty shall not apply to component parts or accessories of Products not provided by Power Tools S.A. and which carry the warranty of the manufacturer thereof, or to normal maintenance (such as pressure adjustments) or to normal maintenance parts (such as filters and spark plugs). Replacement or repair parts installed in the Product covered by this Warranty are warranted only for the remainder of this Warranty as if such parts were original components of said Product. POWER TOOLS S.A. MAKES NO OTHER EXPRESS WARRANTY. TO THE EXTENT PERMITTED BY LAW POWER TOOLS S.A. MAKES NO IMPLIED WARRANTY AND MAKES NO WARRANTY OF MERCHANTABILITY OR FITNESS FOR ANY PARTICULAR PURPOSE. IN ANY EVENT IMPLIED WARRANTIES INCLUDING THOSE OF MERCHANTABILITY AND FITNESS FOR A PARTICULAR PURPOSE ARE LIMITED TO THE DURATION OF THIS EXPRESS WARRANTY.

Any transportation charges, costs of installation, duty, taxes or any other charges whatsoever must be borne by the user. Power Tools S.A.'s obligation under this limited Warranty shall not include any liability for direct, indirect, incidental, or consequential damage or delay. If requested by Power Tools S.A., Products or parts for which a warranty claim is made are to be returned transportation prepaid by user to the factory. Any improper use, including operation after discovery of defective or worn parts, operation beyond capacity, substitution of parts not approved by Power Tools S.A., or any alteration or repair by others in such manner as in Power Tools S.A.'s judgement affects the Product materially and adversely, shall void this Warranty.

NO EMPLOYEE OR REPRESENTATIVE IS AUTHORIZED TO CHANGE THIS WARRANTY IN ANY WAY OR GRANT ANY OTHER WARRANTY UNLESS SUCH CHANGE IS MADE IN WRITING AND SIGNED BY AN OFFICER OF POWER TOOLS S.A. AT ITS HOME OFFICE.

### WARRANTY SERVICE

Always specify model and serial numbers when communicating with Power Tools S.A.

We reserve the right to amend these specifications at any time without notice. The only Warranty applicable is our standard written Warranty. We make no other Warranty, expressed or implied.


**POWER TOOLS S.A.**

31, rue de la Hallette
4411 HERSTAL



099800-01
Rev. D
8/93