# PNEUMATIC FINISH NAILER, 15gauge

## Model AF631

**IMPORTANT** - To assure product SAFETY and RELIABILITY, repairs, maintenance or adjustments should be performed by **MAKITA** Service Centers or other qualified service organizations. Always use **MAKITA** replacement parts.

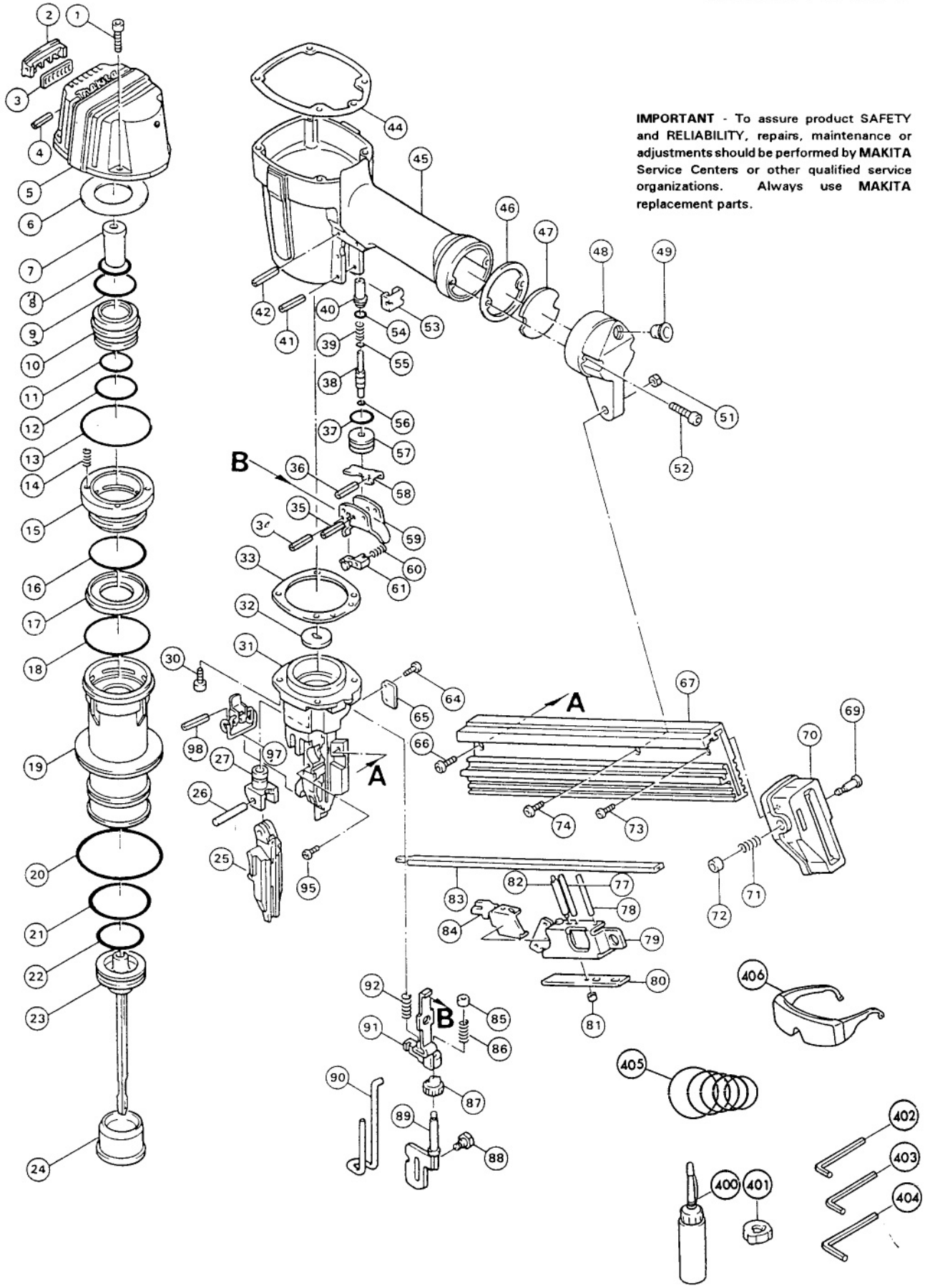

| Fig. | Part No. | Qty. Used | Description |
|---|---|---|---|
| 1 | 922232-8 | 4 | H.S.H. BOLT M5x20 |
| 2 | 414957-3 | 1 | COVER |
| 3 | 415235-4 | 1 | MUFFLER |
| 4 | 258018-7 | 2 | SPRING PIN 2.5-9 |
| 5 | 151435-9 | 1 | TOP CAP Cpl. (Incl. 421403-9, Top Cap Bumper) |
| 6 | 261093-4 | 1 | URETHANE WASHER 32 |
| 7 | 421399-4 | 1 | CUSHION R |
| 8 | 213416-2 | 1 | O RING 26 |
| 9 | 213462-5 | 1 | O RING 33 |
| 10 | 414935-3 | 1 | MAIN VALVE |
| 11 | 213424-3 | 1 | O RING 27 |
| 12 | 213423-5 | 1 | O RING 30 |
| 13 | 213665-1 | 1 | O RING 56 |
| 14 | 233038-2 | 4 | COMPRESSION SPRING 5 |
| 15 | 316380-7 | 1 | SUB VALVE |
| 16 | 213558-2 | 1 | O RING 42 |
| 17 | 421400-5 | 1 | VALVE SHEET |
| 18 | 213604-1 | 1 | O RING 50 |
| 19 | 316379-2 | 1 | CYLINDER |
| 20 | 213706-3 | 1 | O RING 67 |
| 21 | 213613-0 | 1 | O RING 45 |
| 22 | 213475-6 | 1 | O RING 34 |
| 23 | 150545-9 | 1 | DRIVER Cpl. |
| 24 | 421491-6 | 1 | CUSHION F |
| 25 | 150617-0 | 1 | DOOR |
| 26 | 256756-5 | 1 | PIN 4-30 |
| 27 | 311977-7 | 1 | DOOR PUSHER |
| 30 | 265973-6 | 4 | H.S.H. BOLT M5x20 |
| 31 | 310025-9 | 1 | DRIVER GUIDE |
| 32 | 344213-6 | 1 | DRIVER PLATE |
| 33 | 442108-8 | 1 | DRIVER GUIDE GASKET |
| 34 | 951072-7 | 1 | SPRING PIN 3-24 |
| 35 | 258004-8 | 1 | SPRING PIN 2.5-16 |
| 36 | 258004-8 | 1 | SPRING PIN 2.5-16 |
| 37 | 213218-6 | 1 | O RING 16 |
| 38 | 322530-4 | 1 | TRIGGER VALVE STEM |
| 39 | 233035-8 | 1 | COMPRESSION SPRING 3 |
| 40 | 322531-2 | 1 | PILOT VALVE |
| 41 | 951072-7 | 1 | SPRING PIN 3-24 |
| 42 | 258020-0 | 2 | SPRING PIN 2.5-22 |
| 44 | 442109-6 | 1 | TOP CAP GASKET |
| 45 | 159799-5 | 1 | HOUSING Cpl. (Incl. 1 ea. 421401-3, Housing Bumper R; & 421402-1, Housing Bumper L) |
| 46 | 442110-1 | 1 | INLET CAP GASKET |
| 47 | 413054-2 | 1 | INLET FILTER |
| 48 | 150547-5 | 1 | INLET CAP Cpl. |
| 49 | 286219-7 | 1 | CAP 12 |
| 51 | 931202-6 | 1 | HEX. NUT M5 |
| 52 | 922242-5 | 2 | H.S.H. BOLT M5x25 |
| 53 | 343879-9 | 1 | HOLDER |
| 54 | 213030-4 | 1 | O RING 8 |
| 55 | 213028-1 | 1 | O RING 2 |
| 56 | 213028-1 | 1 | O RING 2 |
| 57 | 322380-7 | 1 | TRIGGER VALVE CASE |
| 58 | 344258-4 | 1 | IDLER |
| 59 | 165133-9 | 1 | TRIGGER |
| 60 | 233036-6 | 1 | COMPRESSION SPRING 5 |
| 61 | 311895-9 | 1 | CHANGE LEVER |
| 64 | 265373-0 | 1 | H.S.H. BOLT M4x8 |
| 65 | 344217-8 | 1 | GUIDE PLATE |
| 66 | 266075-1 | 1 | H.S.H. BOLT M5x6 |
| 67 | 331465-8 | 1 | MAGAZINE |
| 69 | 268001-6 | 1 | PIN 5 |
| 70 | 415668-3 | 1 | MAGAZINE CAP |
| 71 | 231311-4 | 1 | COMPRESSION SPRING 7 |
| 72 | 262534-3 | 1 | RUBBER SLEEVE 4 |
| 73 | 266074-3 | 1 | H.S.H. BOLT M4x8 |
| 74 | 266076-9 | 1 | H.S.H. BOLT M5x10 |
| 77 | 256833-3 | 1 | ROD 3 |
| 78 | 256834-1 | 1 | ROD 4 |
| 79 | 151455-3 | 1 | PUSHER COVER |
| 80 | 344218-6 | 1 | STOP PLATE |
| 81 | 262533-5 | 2 | URETHANE SLEEVE 3 |
| 82 | 256440-2 | 1 | PIN 2-4 |
| 83 | 344214-4 | 1 | MAGAZINE RAIL |
| 84 | 344215-2 | 1 | PUSHER |
| 85 | 262534-3 | 1 | RUBBER SLEEVE 4 |
| 86 | 233127-3 | 1 | COMPRESSION SPRING 7 |
| 87 | 311896-7 | 1 | ADJUSTER |
| 88 | 265430-4 | 1 | HEX. BOLT M5 |
| 89 | 165147-8 | 1 | SLIDER |
| 90 | 322800-1 | 1 | CONTACT TOP |
| 91 | 165114-3 | 1 | CONTACT ARM |
| 92 | 233128-1 | 1 | COMPRESSION SPRING 7 |
| 95 | 265373-0 | 2 | H.S.H. BOLT M4x8 |
| 97 | 163375-9 | 1 | LATCH |
| 98 | 951072-7 | 1 | SPRING PIN 3-24 |

**ACCESSORIES**

| | | | |
|---|---|---|---|
| 400 | 181434-7 | 1 | OIL SUPPLY |
| 401 | 421508-5 | 1 | NOSE CAP |
| 402 | 783208-8 | 1 | HEX. WRENCH 2.5 |
| 403 | 783201-2 | 1 | HEX WRENCH 3 |
| 404 | 783202-0 | 1 | HEX WRENCH 4 |
| 405 | 192393-0 | 1 | FIRST AID KIT |
| 406 | 1922A | 1 | SAFETY GLASSES |