OLYMPUS®

ZUIKO DIGITAL
ED90-250mm f2.8

EN Instructions

CE

For customers in Europe

The "CE" mark indicates that this product complies with the European requirements for safety, health, environment and customer protection. CE-mark products are for sale in Europe.

For customers in USA

FCC Notice

This device complies with part 15 of the FCC rules. Operation is subject to the following two conditions: (1) This device may not cause harmful interference, and (2) this device must accept any interference received, including interference that may cause undesired operation.

Any unauthorized changes or modifications to this equipment would void the user's authority to operate.

For customers in CANADA

This Class B digital apparatus complies with Canadian ICES-003.

Features

- The ED90-250mm f2.8 is a lens with high imaging capability, designed exclusively for use with Olympus FOUR THIRDS single-lens-reflex digital cameras.
- Dustproof and drip-proof construction.
- Telephoto zoom lens equivalent to a 180–500 mm lens on a 35 mm film camera.
- High-image-quality, 12-group, 17-element F2.8 lens system that includes three ED elements (Extra-low Dispersion glass lenses).
- Can be used in combination with the optional EC-14 teleconverter.
- Can be used in combination with the optional EX-25 extension tube under the following conditions:

Focal Distance	Shooting Range	Magnification (Equivalent 35mm values are shown in parentheses)
90 mm	47.7 cm – 53.5 cm (1.59 ft – 1.78 ft)	0.28x – 0.32x (0.56x – 0.64x)
150 mm	69.9 cm – 103.7 cm (2.33 ft – 3.45 ft)	0.17x – 0.24x (0.34x - 0.48x)
250 mm	107.1 cm – 264.3 cm (3.57 ft – 8.81 ft)	0.10x – 0.21x (0.20x - 0.42x)

This lens cannot be used in combination with the Olympus Macro Flash System.

Contents

- Features 12
- Checking the Package Contents 13
- Nomenclature 13
- Attaching the Lens Strap 14
- Attaching the Lens Case Strap 14
- Using the Protection Filter 14
- Attaching Lens Hood LH-120B 15
- How to Turn the Camera 15
- Focus Limit Switch 16
- Focus Stop Buttons 16
- Shooting Cautions 16
- Attaching Lens Cap LC-140 16
- Precautions: Be Sure to Read the Following 17
- Main Specifications 18

Checking the Package Contents

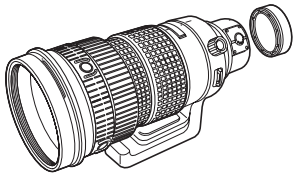

Lens body

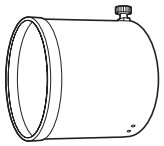

Lens Hood LH-120B

Lens Case LSH-1738

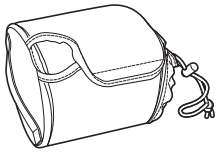

Lens Cap LC-140

Lens Strap

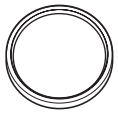

Protection filter

Nomenclature

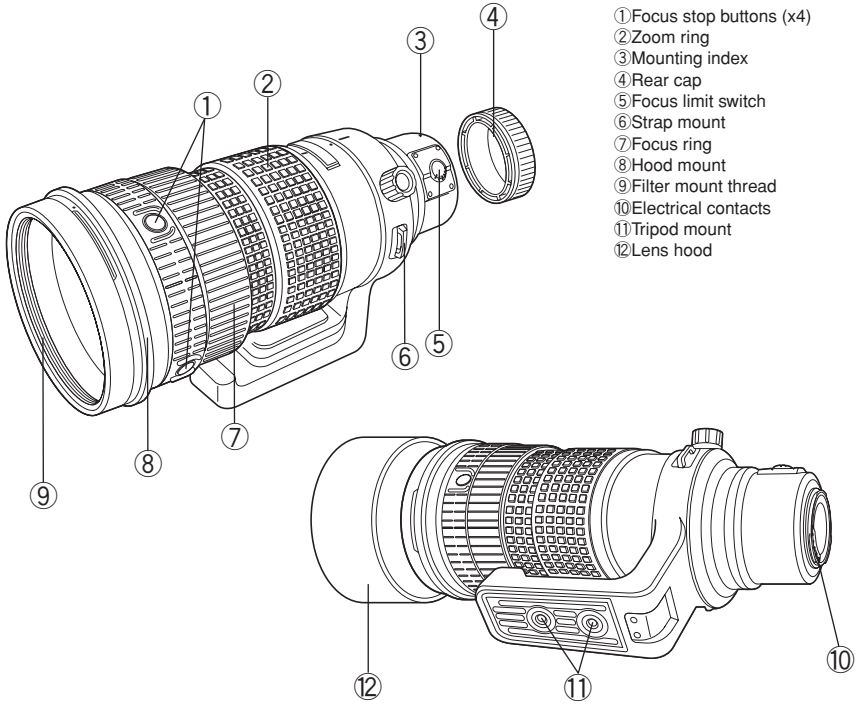

①Focus stop buttons (x4)
②Zoom ring
③Mounting index
④Rear cap
⑤Focus limit switch
⑥Strap mount
⑦Focus ring
⑧Hood mount
⑨Filter mount thread
⑩Electrical contacts
⑪Tripod mount
⑫Lens hood

Attaching the Lens Strap

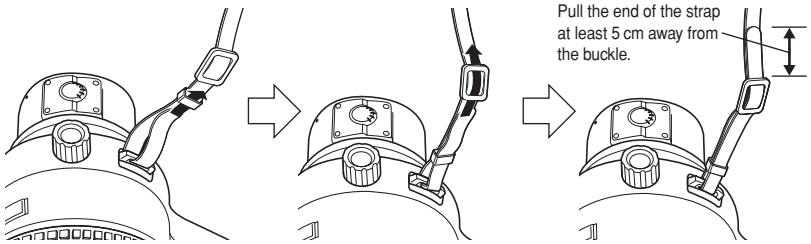

Attaching the Lens Case Strap

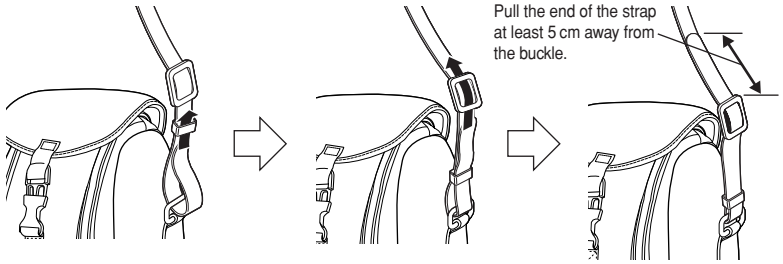

Using the Protection Filter

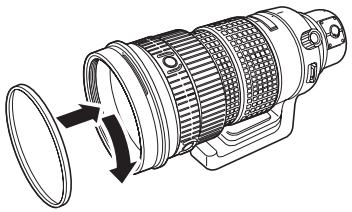

- To protect the lens, attach the protection filter.
- Remove the protection filter before attaching another filter.

Attaching Lens Hood LH-120B

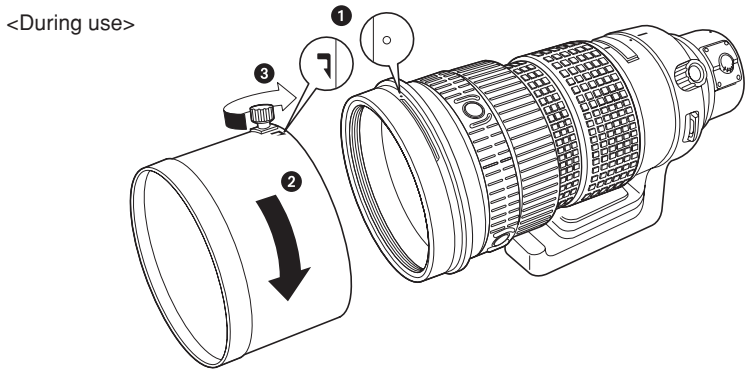

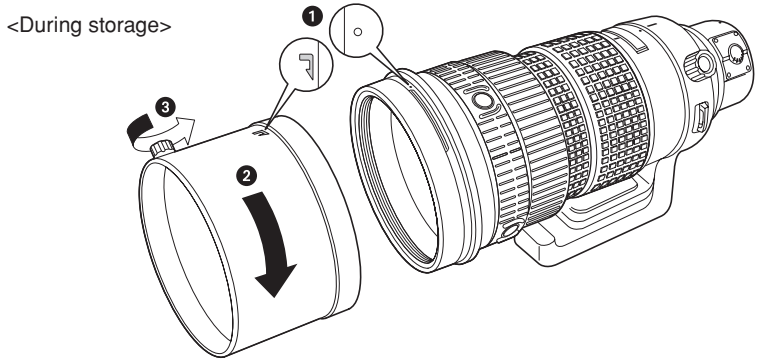

How to Turn the Camera

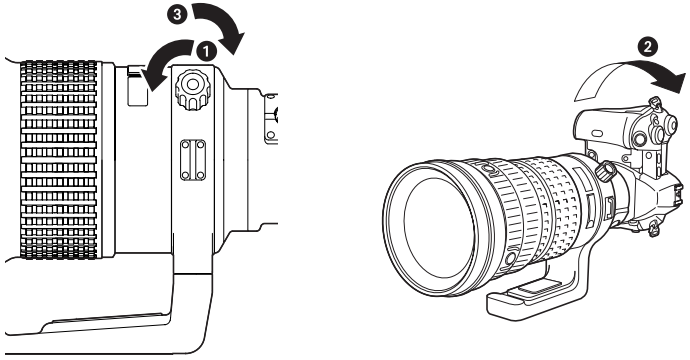

Focus Limit Switch

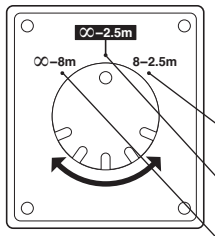

This switch limits the autofocus range to speed up focusing in each range.
Select the optimum mode according to the shooting distance.

Close-up shooting : Autofocus is performed between 8 meters (26.6 ft) and 2.5 meters (8.3 ft).

Normal shooting : Autofocus is performed from ∞ (infinity) to 2.5 meters (8.3 ft).

Distant shooting : Autofocus is performed from ∞ (infinity) to 8 meters (26.6 ft).

Focus Stop Buttons

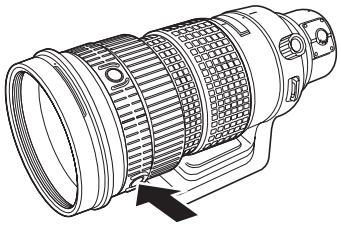

- By holding down one of the focus stop buttons, you can deactivate autofocus operation and fix focus at the point where the button was pressed.
- Four buttons are provided. All have the same effect.

Shooting Cautions

- Be sure to attach the hood when shooting against the light.
- When two or more filters are used or a thick filter is used, part of the picture may be cut off or obscured.

Attaching Lens Cap LC-140

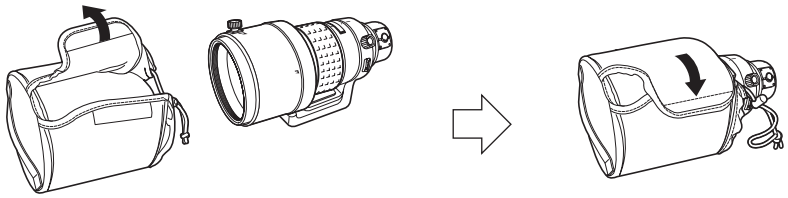

Precautions: Be Sure to Read the Following

⚠ Warnings: Safety Precautions

Do not view the sun through the lens.

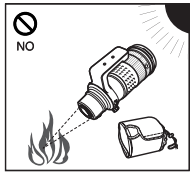

Do not leave the lens without the cap. If solar light is converged through the lens, a fire may result.

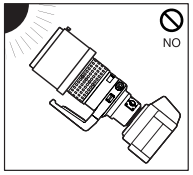

Do not point the camera lens at the sun. Sunlight will converge in the lens and focus inside the camera, possibly causing a malfunction or fire.

Handling Precautions

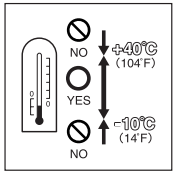

Working temperature range

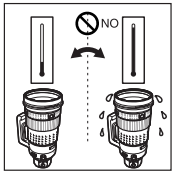

Abrupt temperature changes

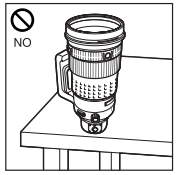

Do not put the lens with its contacts facing down.

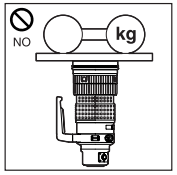

Too much pressure

Do not touch the lens.

Submergence

Do not touch the contacts.

Do not drop

Organic solvents

Excessive moisture

Magnetism

Storage Precautions

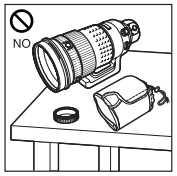

Cap the lens when it is not used.

Moth repellents

Lens cleaning

Main Specifications

Mount	: Four Thirds mount
Focal distance	: 90-250 mm
Max. aperture	: f2.8
Image angle	: 14°-5.0°
Lens configuration	: 17 elements in 12 groups Multi-layer coating (partial single-layer coating)
Iris control	: f2.8 to f22
Shooting range	: 2.5 m (8.3 ft) to ∞ (infinity)
Focus adjustment	: AF/MF switching
Weight	: 3250 g (114.6 oz)
Dimensions	: Max. dia. ø123 mm (4.8 in) x Overall length 276 mm (10.9 in)
Lens hood mount	: Covering
Filter mount thread diameter	: 105 mm (4.2 in)

• Design and specifications are subject to change without any notice or obligation on the part of the manufacturer.

Lens configuration diagram

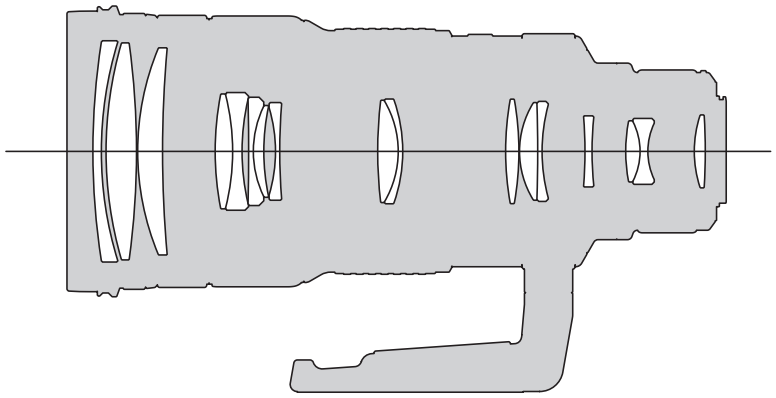

● Technical Support (USA)
24/7 online automated help: http://www.olympusamerica.com/E1
Phone customer : Tel.1-800-260-1625 (Toll-free)
Our phone customer support is available from 8 am to 10 pm (Monday to Friday) ET
E-Mail : e-slrpro@olympusamerica.com

● European technical Customer Support
Please visit our homepage http://www.olympus-europa.com
or call NUMBER : Tel.00800-67 10 83 00 (Toll-free)
+49 1805-67 10 83 or +49 40-23 77 38 99 (Charged)