Owner's Manual

M9.57

Low-Impact Treadmill

PRECOR® USA

move beyond®

Important Safety Instructions

When using the treadmill, always take basic precautions, including the following:

- Read all instructions before using the treadmill. These instructions are written for your safety and to protect the unit.
- Before beginning any fitness program, see your physician for a complete physical examination.

  Il est conseillé de subir un examen médical complet avant d'entreprendre tout programme d'exercice. Si vous avez des étourdissements ou des faiblesses, arrêtez les exercices immédiatement.

DANGER **To reduce the risk of electrical shock always unplug the treadmill from the electrical outlet immediately after using and before cleaning.**

WARNING **To reduce the risk of burns, fire, electric shock, or injury, take the following precautions:**

- Do not allow children or those unfamiliar with its operation on or near the treadmill. Do not leave children unsupervised around the unit.
- Never leave the treadmill unattended when it is plugged in. Unplug the treadmill from the power source when it is not in use, before cleaning it, and before providing authorized service.
- Assemble and operate the treadmill on a solid, level surface. Locate the treadmill a few feet from walls or furniture. Keep the area behind the treadmill clear.
- Maintain the treadmill in good working condition. Refer to the *Maintenance* section. Make sure that all fasteners are secure and the running belt is clean and running smoothly.
- Use the treadmill only for its intended purpose as described in this manual. Do not use accessory attachments that are not recommended by the manufacturer, as such attachments may cause injuries.
- Never operate the unit if it is damaged, not working properly, when it has been dropped, or has been dropped in water. Return the treadmill to a service center for examination and repair.
- Keep the power cord and plug away from heated surfaces.
- Do not operate the treadmill where aerosol (spray) products are being used or where oxygen is being administered.

- Do not use outdoors.
- Never block the air vents while operating the treadmill. Keep the air vents clean and free of lint, hair, or anything that might impede the free flow of air.
- Do not attempt to service the treadmill yourself except to follow the maintenance instructions found in this manual.
- Never drop or insert objects into any opening. Keep hands away from moving parts.
- Keep all electrical components, such as the power cord and I/O switch, away from liquids to prevent shock.
- Do not set anything on the handrails, display console, or hood. Place liquids, magazines, and books in the appropriate receptacles.

DANGER **The treadmill must be connected to a dedicated, grounded circuit. See *Grounding Instructions*.**

- Wear proper exercise clothing and shoes for your workout and avoid loose clothing. Do not wear shoes with heels or leather soles. Check the soles of your shoes and remove any dirt and embedded stones. Tie long hair back.
- Use care when getting on or off the treadmill. Always grasp the handrail when stepping on the running belt and keep the initial speed at or below 1 mile per hour (mph) or 1 kilometer per hour (kph). Never step off the treadmill while the running belt is moving.
- Before the running belt begins moving (before your workout), and after it stops (at the end of your workout), straddle the belt by placing your feet firmly on the right and left staging platforms.
- Keep your body and head facing forward. Never attempt to turn around on the treadmill.
- The safety clip must be attached at waist level before your workout. A lanyard connects the safety clip to the red STOP button. If you encounter difficulties, a strong tug on the lanyard stops the running belt.
- Do not rock the unit. Do not stand on the handrail(s), display console, or hood.
- Do not overexert yourself or work to exhaustion. If you feel any pain or abnormal symptoms, stop your workout immediately and consult your physician.
- When the treadmill is not in use, disconnect the unit by turning the power switch to the Off (O) position, and then remove the power plug from the power outlet.

Safety Code

To help prevent unauthorized use, the treadmill is equipped with a safety code. The safety code involves entering four keys in sequence. If the correct keys are not pressed within two minutes, further access is denied and the running belt will not move. For more information, refer to *Entering the Safety Code.*

Safety Approval

When identified with the ETL-c logo, the unit has been tested and conforms to the requirements of CAN/CSA-E-335-1/3-04, EN 60335-1: 2002 Safety of Household and Similar Electrical Appliances. This unit is a Class S/B or C certified machine according to applicable EN957 standards.

Grounding Instructions

The treadmill must be grounded. If the unit malfunctions or breaks down, grounding provides a path of least resistance for electric current, which reduces the risk of electrical shock. The unit is equipped with a power cord having an equipment-grounding conductor and a grounding plug. The plug must be inserted into an outlet that is properly installed and grounded in accordance with all local codes and ordinances. Failure to properly ground the treadmill could void the Precor Limited Warranty.

DANGER **Improper connection of the equipment-grounding conductor can result in a risk of electric shock. Check with a qualified electrician or service person if you are in doubt as to whether the unit is properly grounded. Do not modify the plug provided with the treadmill. If it does not fit the outlet, get a proper outlet installed by a qualified electrician.**

120 V Units Designated for U.S. Markets

The treadmill must be connected to a dedicated, grounded circuit with a nominal 120-volt rating. The unit's grounding plug looks like the plug shown in Diagram 1. The power outlet must have the same configuration as the plug. No adapter should be used with this product.

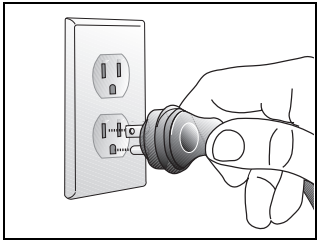

Diagram 1: Power plug

Radio Frequency Interference (RFI)

Federal Communications Commission, Part 15

The treadmill has been tested and found to comply with

- the limits for a Class B digital device, pursuant to Part 15 of the FCC Rules. These limits are designed to provide reasonable protection against harmful interference in a residential installation. The treadmill generates, uses, and can radiate radio frequency energy and, if not installed and used in accordance with the owner's manual instructions, may cause harmful interference to radio communications.

If the treadmill does cause harmful interference to radio or television reception, which can be determined by turning the unit Off and On, you are encouraged to try to correct the interference using one or more of the following measures:

- Reorient or relocate the receiving antenna for your TV, radio, VCR, etc.
- Increase separation between the unit and the receiver (TV, radio, etc.).
- Connect the treadmill into a different power outlet on a dedicated circuit different from the one used by the receiver (TV, radio, etc.). No other appliance should be plugged into the same power outlet as the treadmill.
- Consult an experienced radio/TV technician for help.

WARNING **Per FCC rules, changes or modifications not expressly approved by Precor could void the user's authority to operate the equipment.**

Canadian Department of Communications

This digital apparatus does not exceed the Class B limits for radio noise emissions from digital apparatus set out in the Radio Interference Regulations of the Canadian Department of Communications.

Le présent appareil numérique n'émet pas de bruits radioéélectriques dépassant les limites applicables aux appareils numériques de la class B prescrites dans le Règlement sur le brouillage radioélectrique édicté par le ministére des Communications du Canada.

ATTENTION: Haute Tension

Débranchez avant de réparer

Obtaining Service

You should not attempt to service the treadmill except for maintenance tasks as described in this manual. The treadmill does not contain any user-serviceable parts that require lubrication. For information about product operation or service, see the Precor web site at www.precor.com.

Should you need more information regarding customer support numbers or a list of Precor authorized service centers, visit the Precor web site at www.precor.com/corp/contact.

For future reference, write the model, serial number, and date of purchase for your unit in the space provided. The serial number is printed on a label located on the front panel, near the power cord (Diagram 2).

Model #: _____ Serial #: _____

Date purchased: _____

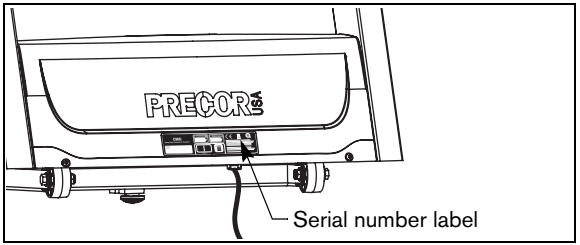

Diagram 2: Location of serial number

Notes:

Table of Contents

Important Safety Instructions 1
Safety Code 3
Safety Approval 3
Grounding Instructions 3
Radio Frequency Interference (RFI) 4
Obtaining Service 5

Treadmill Safety Features 9
Using the Safety Clip 9
Entering the Safety Code 10
Using the Handrails 10
Turning the Unit On and Off 10
Weight Limit 11
Location 11

Heart Rate Features 12
Important Use and Safety Information 12
Using the Heart Rate
Touch-Sensitive Handrail Grips 14
Using SmartRate 15
Exercise to Your Target Heart Rate 16
Heart Rate Analysis 17

Display Console 18
More Information about the Upper Display 19
More Information about the Center Display 19
More Information about the Lower Display 19
Keypads 21

User Identification 27
Adding a User 28
Updating User Information 29
Changing the User Name and
Clearing Workout Statistics 30

Workout Options 31
Choosing QUICKSTART 32
Selecting a Program 33
Selecting a User ID 34
Setting Display Preferences Before Exercising 35
Cooling Down After a Workout 35
Pausing During a Workout or the
Cool-Down Period 36
Ending a Workout 37

Programs **38**
Choosing a Program 38
Program Tips 39
Manual Program 39
Interval Programs 40
Random Program 41
Walk in the Park Program 41
Distance Goal Program 42
Custom Programs 42
Heart Rate Programs 43
Weight Loss Programs 46
5K Program 47
10K Program 47
Track Program 48
One Mile Program 48
Two Mile Program 49
Fitness Test Program 49

Exercise Session **52**
Changing Programs in Mid-session 52
Recording Your Personal Best Time 53
Changing the Workout Time 54
Adjusting Program Goals 55
Changing Your Workout Display Options 55
Changing the Units of Measure Display 57
Adjusting Your Target Heart Rate 57
Changing Safety Code Protection 58

Advanced Programming and Troubleshooting **59**
Advanced Programming Tips 59
Changing Treadmill Settings 60
Informational Displays 62
Troubleshooting Error Codes 66
Troubleshooting Heart Rate 66

Maintenance **67**
Inspection 67
Cleaning the Equipment 67
Storing the Chest Strap 68
Checking the Alignment of the Running Belt 68
Adjusting the Running Belt 69
Long-Term Storage 70

Precor Residential Equipment Limited Warranty **71**

Treadmill Safety Features

The treadmill is equipped with certain items that, when used properly, help sustain an enjoyable workout. These items include:

- Safety clip
- Safety code
- Handrails
- I/O power switch

Important: *Before exercising, review the* Important Safety Instructions *found at the beginning of this manual.*

Using the Safety Clip

Attach the safety clip to your clothing before each workout. Refer to Diagram 3. A tug on the lanyard trips the safety switch inside the display console and stops the running belt.

If the safety switch trips while you are exercising, the running belt stops and the treadmill enters pause mode.

To resume exercising, take the following steps:

1. If needed, reattach the safety clip to your clothing.
2. Straddle the running belt.
3. Press QUICKSTART.
4. If needed, enter the safety code.
5. Hold onto a handrail while you step on to the running belt with the speed at or below 1 mph or 1 kph.

Note: The treadmill retains your workout statistics if you resume exercising within ten minutes.

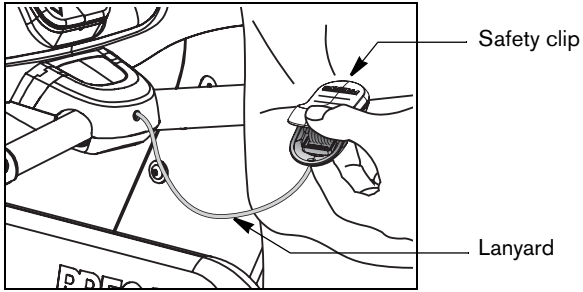

Diagram 3: Attach the safety clip to your clothing

Entering the Safety Code

The treadmill provides a safety code to help prevent unauthorized use. You have the option to enable or disable the feature using the OPTIONS key. Refer to *Setting Display Preferences Before Exercising*.

At the safety code prompt, press the following number sequence: 1, 2, 3, 4.

An asterisk appears on the display with each key press. If the correct keys are not pressed within two minutes, the Precor banner appears on the display and the running belt does not move.

Important: *Do not assume the treadmill is safe because of safety code protection. Never leave children unsupervised around the treadmill. Always turn Off and unplug the treadmill when it is not in use.*

Using the Handrails

To maintain your balance, always grasp a handrail extension when you step on or off the treadmill, and when you use the keypad.

To learn more about the touch-sensitive handrail grips, refer to *Heart Rate Features*.

Turning the Unit On and Off

To turn the unit On and Off, use the I/O power switch located at the front of the unit, near the power cord connection. Refer to Diagram 4.

Important: *When it is not being used, turn the unit Off.*

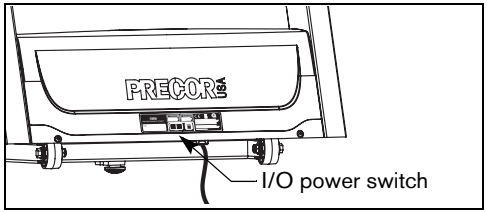

Diagram 4: I/O power switch

Weight Limit

You should not allow runners over 350 lb. (160 kg) or walkers heavier than 500 lb. (225 kg) on the treadmill.

Location

It is important to keep the area around the treadmill open and free from encumbrances such as other equipment. The minimum space requirement needed for user safety and proper maintenance is three feet wide by six feet deep (one meter wide by two meters deep), directly behind the running belt.

Heart Rate Features

Heart rate and SmartRate® features are available when you wear the chest strap or grasp both touch-sensitive handrail grips. When a heartbeat is detected, the HEART RATE display shows your heart rate and, if your age has been entered, the SmartRate LED pulses and indicates your target zone.

Important Use and Safety Information

Read the following before using the heart rate or SmartRate features.

- Consult your physician before engaging in any vigorous exercise. Do not use the heart rate programs until authorized by your physician.
- Know your heart rate and your physician-recommended heart rate target zone. Individual heart rates vary according to several physiological factors and may not correspond directly with Diagram 5.
- The calculation used for the heart rate target zone is: (220 minus your age) multiplied by a percent.

  For example:
  Low range: (220 minus your age) multiplied by 55%

  High range: (220 minus your age) multiplied by 85%

  Refer to Table 1 in *Using SmartRate*.

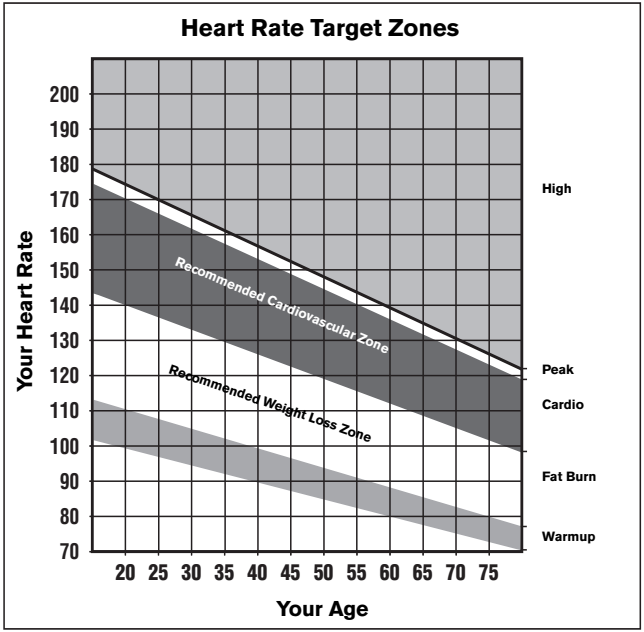

Diagram 5: Heart rate target zones

- After you put on the chest strap, face the display console for a minimum of 15 seconds. This allows the receiver in the console to recognize the signal from the chest strap. If **Hr** appears on the display, the treadmill is detecting a signal, but has not yet determined your heart rate. Make sure the chest strap is positioned properly around your chest and against your skin.
- If you prefer to use the touch-sensitive handrail grips, grasp both touch-sensitive handrail grips and wait five to ten seconds. Make sure both hands are moist (not dry).

Note: When a signal is detected, a number flashes in the HEART RATE display and indicates your heart rate.

- Always face forward on the treadmill and use the handrail for balance. Keep upper body movement to a minimum.

Using the Heart Rate Touch-Sensitive Handrail Grips

While exercising, you must grasp both touch-sensitive handrail grips for a minimum of five to ten seconds to transmit your heart rate to the display. Refer to Diagram 6.

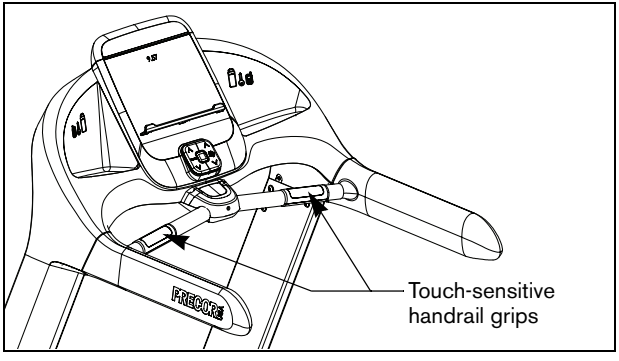

Diagram 6: Touch-sensitive handrail grips

Usually, the concentration of salts in a person's perspiration provides enough conductivity to transmit a signal to the receiver inside the display console. However, some people, because of body chemistry or erratic heart beats cannot use the touch-sensitive heart rate feature on the treadmill. A chest strap may provide better results.

Important: *While exercising, do not grasp the touch-sensitive handrail grips and wear the chest strap at the same time. The touch-sensitive handrail grips override the signals from the chest strap transmitter. If used together, inconsistent readings may occur.*

Using SmartRate

The SmartRate feature helps you monitor and maintain your heart rate in the target zone best suited to your specific needs. All 10 LEDs may light during a workout. When the treadmill detects a heart rate, a single LED blinks and indicates the zone that your heart rate is in.

Important: *To use the SmartRate feature, you must enter your age during the setup phase of your exercise session.*

The 10 LEDs in the SmartRate display are color-coded. A pulsating orange LED indicates you are outside the recommended heart rate target zone. Green LEDs indicate when you are exercising within the recommended fat burn or cardio fitness zones.

Table 1 shows the percents used in calculating the heart rate target zones. While your heart rate remains within these zones, the corresponding lights blink and provide a visual cue.

The calculation used to determine your maximum aerobic heart rate is (220 minus your age). When you multiply it by the percent indicated in Table 1, you can understand the relationship between the pulsating LED and your target heart rate.

CAUTION: Your heart rate should never exceed 85% of your maximum aerobic heart rate or go above PEAK. If it does, immediately reduce your pace or adjust the incline to return your heart rate to your physician-recommended target zone.

Table 1. Heart rate target zones and SmartRate LEDs

Heart Rate Zone Percent	*LED Lit*	*LED Blinking*
Below 50	First	Orange
50 to 54	Second	Orange
55 to 59	Third	Green
60 to 64	Fourth	Green
65 to 69	Fifth	Green
70 to 74	Sixth	Green
75 to 79	Seventh	Green
80 to 84	Eight	Green
85 to 87	Ninth	Orange
Above 87	Tenth	Orange

The SmartRate indicator lights do not appear when:

- You press QUICKSTART at the banner.
- You do not enter your age before an exercise session.
- You do not wear or improperly position the chest strap.
- You fail to grasp both touch-sensitive handrail grips for five to ten seconds.

Note: Review the information on the QUICKSTART card that accompanies your literature packet. It explains how to adjust the chest strap.

Exercise to Your Target Heart Rate

A heart rate receiver is an integral part of the display so you can monitor your heart rate while exercising. If you wear a chest strap or grasp both touch-sensitive handrail grips, your heart rate (beats per minute) appears on the display.

The Precor web site (www.precor.com) has several suggestions for workouts with varying levels of intensity. It provides many workout details that include the appropriate target heart rate.

The treadmill includes several programs that let you exercise based on a specified target heart rate. As you exercise, the heart rate programs monitor your heart rate and automatically maintain it within a few beats per minute (bpm) of your selected target. Refer to Table 2.

To use these programs, press the PROGRAMS - HEART RATE key. For more information, refer to *Programs*.

Table 2. Heart rate programs

PROGRAMS - HEART RATE
Basic HRC
Weight Loss HRC
Heart Health HRC
Endurance HRC
Speed HRC

Heart Rate Analysis

Every time you complete a program using the chest strap or touch-sensitive handrail grips, the treadmill provides a heart rate analysis after the workout summary.

Your average heart rate appears followed by the maximum heart rate achieved during your workout. A third display appears, if you entered your age, and indicates the amount of time your heart rate remained between the target zones shown.

The heart rate analysis is based on how often your heart rate signal is received while exercising. If you use the chest strap, the average heart rate will be more accurate than if you occasionally grasp the touch-sensitive handrail grips.

Display Console

Upper display: *Initially shows the Precor banner. It changes to the program profile. A blinking column in the profile indicates your position.* The smaller CALORIES and HEART RATE displays provide an area to show your calorie expenditure and pulse.

PROGRAMS keypad: *To begin an exercise session, press the PROGRAMS keys to view a menu of programs within each category. For program descriptions, refer to Programs.*

Navigational arrow keys: *Lets you display exercise information prior to selecting it with the OK key.*

Selection keys: *Each key lets you move through the information in each column, choosing what you want to display during your session. Indicator lights appear next to the item that is displayed.*

SmartRate display: *LEDs light in this column when the SmartRate feature is activated. Follow the LEDs to monitor your heart rate and maintain it in your target zone.*

Number keys: *During an exercise session, use the number keys to answer prompts and update information. If the entertainment option is attached, the number keys act as TV channel controls.*

Center display

User 1—4: *Press a user ID at the Precor banner to personalize your exercise experience. The information is stored for future exercise sessions.*

Lower display: *While you exercise, four sets of numbers show information about your session.*

PAUSE/RESET key: *Press it once to enter pause mode. Press it again to display a workout summary. Press it once more to end your exercise session.*

QUICKSTART: *Press QUICKSTART to begin your workout immediately.*

INCLINE and SPEED arrow keys: *Use the arrow keys to adjust the incline or speed.*

Red STOP button: *Press to pause or end a workout.*

More Information about the Upper Display

The estimated cumulative number of calories burned and the program profile appear during an exercise session in the upper portion of the display. Your heart rate appears if you are using the chest strap or touch-sensitive handrail grips. Refer to *Heart Rate Features*.

In most programs, the incline setting affects the column height in the program profile as shown in Diagram 7. The profile raises or lowers according to which arrow key is pressed.

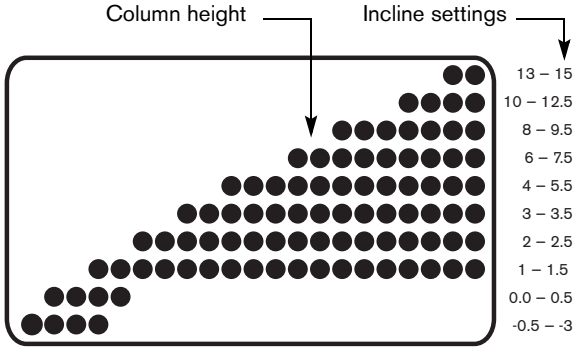

Diagram 7: Column height in the program profile

More Information about the Center Display

The center display presents the program name when you select a program. During an exercise session, the center display becomes a message bar showing additional information depending on user selections and program interludes. For more information about the selections that can appear in the center display, refer to *Changing Your Workout Display Options*.

More Information about the Lower Display

The lower display provides information about your exercise session. The two center windows automatically provide information about your incline and speed. To choose the type of information displayed in the left and right windows, press the adjacent Selection key. The numbers that appear relate to your workout statistics and are described below.

Note: If you choose to rest a book or magazine on the display, you can still view these workout statistics.

Column 1: TIME ELAPSED and TIME REMAINING

TIME ELAPSED–displays workout time in minutes and seconds and indicates the amount of time you have been exercising. When you exceed 60 minutes during a single workout, the TIME ELAPSED display converts to hours and minutes.

TIME REMAINING–shows the amount of time remaining in a workout. If the selected workout time is less than 60 minutes, the display shows time in minutes and seconds. If you select a workout time greater than 60 minutes, the display reflects hours and minutes until the countdown reaches 60 minutes, at which time the display reverts to minutes and seconds.

Column 2: INCLINE

INCLINE–displays the percentage of incline or decline during your workout. The INCLINE arrow keys affect the lift and let you set an incline between -3% and 15%. The values displayed can change in 0.5% increments.

Column 3: SPEED

SPEED–displays the running belt speed in miles per hour (mph) or kilometers per hour (kph). The running belt speed ranges from 0.5 and 12 mph (0.8 to 20 kph) and can be changed in 0.1 increments using the SPEED arrow keys.

Column 4: DISTANCE, PACE and AVERAGE SPEED

DISTANCE–shows linear distance in either miles or kilometers. The distance is calculated based on your speed.

PACE–displays your target speed in minutes and seconds per mile (or kilometer). For example, the number **4.23** indicates that pace (speed at which you are moving) is 4 minutes and 23 seconds per mile.

AVERAGE SPEED–indicates the average speed associated with your workout.

Keypads

Use the keypads to enter your workout session selections, to affect what appears on the display, and to establish your incline and speed preferences.

Five distinct keypads exist on the display and are discussed in this section:

- Lower Display keypad and the Selection keys
- User identification keys
- Navigational keypad in the center of the display
- PROGRAMS keypad
- Number keypad with the ENTER and CLEAR keys

Lower Display Keypad and the Selection Keys

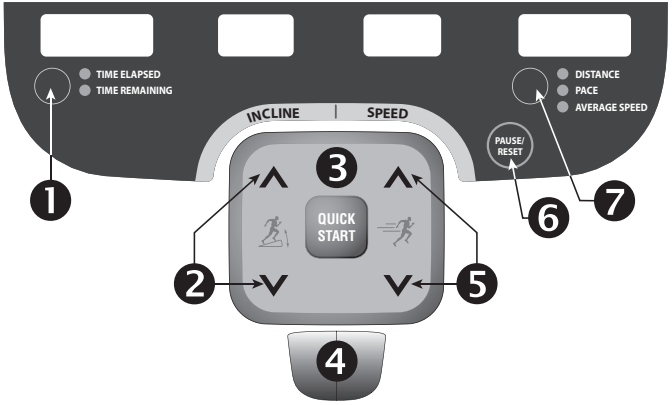

Diagram 8: Lower Display keypad and the Selection keys

1 Left Selection Key: Every time you press this key the the display reflects either the amount of time elapsed since you began your exercise session, or it shows the time remaining. An LED lights and indications which information is being displayed.

2 **INCLINE:** Press and hold the INCLINE arrow keys to increase or decrease the incline from -3% to 15% in 0.5% increments.

Changes to the incline are not immediate. It takes time for the lift to reach the target incline shown on the display.

The incline setting affects the column height in the program profile as shown in Diagram 8.

3 **QUICKSTART:** Press QUICKSTART to start your workout immediately using the Manual Program. Refer to *Choosing QUICKSTART*.

4 **STOP:** A firm tap on the red STOP button slows the running belt to a stop and the treadmill enters pause mode. To resume, press QUICKSTART and enter the safety code, if necessary. Refer to *Pausing During a Workout or the Cool-Down Period*.

5 **SPEED:** Press and hold the SPEED arrow keys to increase or decrease the running belt speed in 0.1 increments from 0.5 to 12 mph (0.8 to 20 kph).

When you press the arrow keys, a target speed appears in the display. The running belt speed changes to meet the target, but the change occurs gradually so the transition is smooth.

6 **PAUSE/RESET:** This key has several functions during an exercise session. You press it once to enter pause mode. You press it again to display a workout summary. And, you press it a third time, to end your session and return to the Precor banner. Refer to *Pausing During a Workout or the Cool-Down Period*.

7 **Right Selection Key**: Every time you press this key the display reflects either the distance travelled since you began your exercise session, your current pace, or your average speed. An LED lights and indicates which information is being displayed.

User ID Keys

Diagram 9: User ID keys

USER ID Keys: To personalize your exercise session, press a user ID (1 through 4) at the Precor banner. Selecting a user ID lets you track your workout statistics from session to session. When you choose a user ID, personal information such as age, weight, and preferred program are reinstated as your exercise session begins. For more information, refer to *Adding a User* or *Selecting a User ID*.

Navigational Keypad

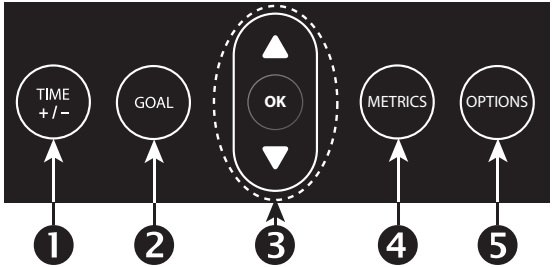

Diagram 10: Navigational keypad

The navigational keypad provides several ways to change your exercise session and to display various workout statistics. The OK key, which allows you to confirm display selections, is also part of the navigational keypad.

1. **TIME +/-:** You can change the workout time while you are exercising, by pressing the TIME +/– key. A blinking number appears in the center display. You can change the number using the navigational arrow keys or enter a different time using the number keys. Refer to *Changing the Workout Time*.

2. **GOAL:** Press the GOAL key to set exercise session goals: time, calories, or distance. You can set your preferences once you are already engaged in an exercise program. Refer to *Adjusting Program Goals*.

3. **Up** and **Down Arrows:** These up and down arrows present the available selections and affect what appears on the display.

   OK: Use the OK key to confirm responses to specific prompts.

4. **METRICS:** The METRICS key is a multi-functional key. It lets you customize the center display while exercising. You select one item from the list or choose ALL METRICS, which causes a variety of scrolling statistics to appear in the center display. To review the list, refer to *Changing Your Workout Display Options*.

5. **OPTIONS:** The OPTIONS key is a multi-functional key. You can set your preferences for units of measure and for the safety code prior to selecting a program. After you are already engaged in an exercise program, the display lets you set your target heart rate. Refer to *Setting Display Preferences Before Exercising* or *Adjusting Your Target Heart Rate*.

PROGRAMS Keypad

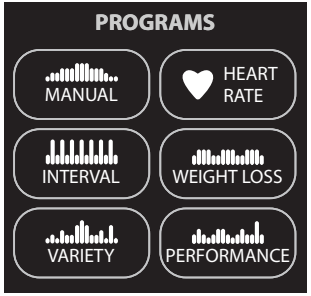

Diagram 11: PROGRAMS keypad

The PROGRAMS keypad provides access to all the exercise programs. Choosing a category and continually pressing the associated PROGRAMS key, cycles you through the menu selections. Refer to Table 3. For a description of each program, refer to *Programs*.

Note: Use the OK key to confirm your selection. For more information, refer to *Workout Options*.

Table 3. Available programs

PROGRAMS key	*Menu Selections*
MANUAL	Manual
INTERVAL	1–1 Interval
	1–2 Interval
	1–3 Interval
	Custom Interval
VARIETY	Random
	Walk in the Park
	Distance Goal
	1 Custom†
	2 Custom†
HEART RATE	Basic HRC
	Weight Loss HRC*
	Heart Health HRC*
	Endurance HRC*
	Speed HRC*
WEIGHT LOSS	Weight Loss
	Weight Loss HRC*
	Calorie Goal
PERFORMANCE	Track
	5 K
	10 K
	1 Mile
	2 Mile
	Fitness Test*

* Use of chest strap or the touch-sensitive handrail grips is required.
† Appears when you select a user ID.

Number Keypad

Diagram 12: Number keypad

The CLEAR and ENTER keys provide the following functions:

CLEAR: Use the CLEAR key to remove the last number being displayed.

ENTER: Use the ENTER key to accept the number being displayed.

Note: The OK and ENTER keys are interchangeable and provide the same function when no peripheral devices are attached to the treadmill.

The number keypad has several functions depending on what is connected to the treadmill.

Connection	***Description***
Entertainment Option	If an entertainment option is connected to the display, the number keypad acts as a remote control which you use to select the available channels. You can also enter number values in answer to exercise session prompts.
Nothing	Whether or not peripheral devices are attached to the unit, the keypad lets you enter number values in answer to exercise session prompts. You need to press ENTER or OK to confirm the selection.

User Identification

Choosing a user identification (user ID) enables the treadmill to identify you and track your cumulative workout statistics. Once you configure your user ID key, you can personalize your workout session and store information about your preferred program, workout time, weight, and age.

The user ID keys allow four people to customize, store, and retrieve workout selections.

Initially, you must “add a user” so the treadmill can store exercise session information associated with the specific user key. Once you enter the requested information, it is stored until you opt to change it. You can select the same user ID key time and time again, and your user preferences will automatically be re-instated.

This section explains how to:

- Add a user.
- Update your personal information.
- Change the user name and clear your workout statistics.

Adding a User

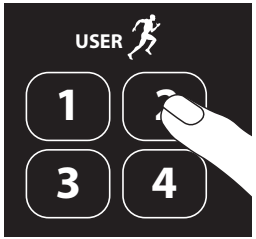

To select a user number, take the following steps:

1. At the Precor banner, press a USER key. A blinking line prompts you to enter the first letter in your name.
2. Use the alphabet, on the number keypad, to enter your name. To enter a letter, press the appropriate number key repeatedly until the desired letter appears. To erase a letter, press the CLEAR key.
3. Wait until the next cell blinks and continue the process until your name or identification is complete.
4. When you are satisfied with your name or user identification, press OK.
5. The display then prompts you to enter your weight, age, and gender.

   Use the navigational arrow keys or number keys to answer each prompt, and then press OK. With each successful entry, you move onto the next prompt. After the gender type prompt, the display indicates that the user setup is complete and resets to the Precor banner.

   To begin an exercise session using your user ID key, refer to *Selecting a User ID*.

Updating User Information

To update user information such as weight and age without clearing the workout statistics associated with a user ID, take the following steps:

1. At the Precor banner, press and hold the user ID key. A welcome greeting scrolls across the display.

   Continue holding the user ID key until CHANGE USER [*user number*]? scrolls across the display. Release the user ID key, and then press OK.

2. When your user name appears, do not change it. Accept it as is by pressing OK.

   Important: *If you change your user name, you also delete all cumulative workout statistics associated with the user name. Refer to Changing the User Name and Clearing Workout Statistics.*

3. Answer the prompts for weight, age, and gender.

   Use the navigational arrow keys or number keys to answer each prompt, and then press OK. With each successful entry, you move onto the next prompt.

4. At the CLEAR [*user name*] STATISTICS? prompt, choose one of the following options:

1 = No	Pressing USER key 1 updates user information only. The program preferences and cumulative workout statistics remain intact.
2 = Yes	Pressing USER key 2 updates user information, but deletes program preferences and cumulative workout statistics. Refer to *Changing the User Name and Clearing Workout Statistics*.

Changing the User Name and Clearing Workout Statistics

You can clear the stored workout statistics for any user ID by changing the name associated with a user ID. Changing the user name resets workout goal, weight, age, and gender preferences to the original factory defaults. The grand total workout statistics and personal best records are reset to zero. The metrics displayed are reset to factory defaults.

1. At the Precor banner, press and hold the user ID key while the welcome greeting scrolls across the display.

   Continue holding the user ID key until CHANGE USER [*user number*]? scrolls across the display. Release the user ID key, and then press OK.
2. When your user name appears, a blinking line prompts you to change the first letter.
3. Use the alphabet, on the number keypad, to enter a new name. To enter a letter, press the appropriate number key repeatedly until the desired letter appears. To erase a letter, press the CLEAR key.
4. Wait until the next cell blinks and continue the process until your name or user identification is complete.
5. When you are satisfied with your name or user identification, press OK.
6. The display then prompts you to enter your weight, age, and gender.

   Use the navigational arrow keys or number keys to answer each prompt, and then press OK. With each successful entry, you move onto the next prompt. After the gender type prompt, the display indicates that the user setup is complete and resets to the Precor banner.

   Note: Preferences and workout statistics are cleared and all programs are restored to original default settings.

Workout Options

CAUTION: Before beginning any fitness program, see your physician for a complete physical examination. Know your physician-recommended heart rate target zone.

1. Turn the unit On. The Precor banner scrolls across the display.
2. Hold on to a handrail while stepping on to the treadmill.
3. Face the display and then straddle the running belt by placing your feet on the trim strips provided.
4. Attach the safety clip to your clothing.
5. Grip a handrail with one hand to steady yourself.
6. Select one of the following options:

Option...	***Steps...***
To start exercising immediately	Use the QUICKSTART key. Refer to *Choosing QUICKSTART*.
To view a list of programs	Press a PROGRAMS key. Refer to *Selecting a Program*.
To begin exercising using personal preferences	Press your USER key. Refer to *Selecting a User ID*.

Choosing QUICKSTART

1. While the Precor banner scrolls, press QUICKSTART to begin the Manual Program.

   QUICKSTART applies the following defaults:

Prompts	***Default Value***
Program	Manual
Time	30 minutes
Weight	150 lb (68 kg)
Age	0

2. Enter the safety code by pressing: 1, 2, 3, 4.

   An asterisk appears on the display with each entry.

3. Hold onto a handrail and straddle the running belt.

   A 3-second countdown appears on the display, and then the running belt starts moving.

4. Step on to the running belt with the speed at or below 1 mph or 1 kph and begin exercising. Use the SPEED arrow keys to increase or decrease the speed of the running belt.

   To use the SmartRate feature, you need to specify your age. In this case, review the steps found in *Adding a User* or *Selecting a Program*.

Selecting a Program

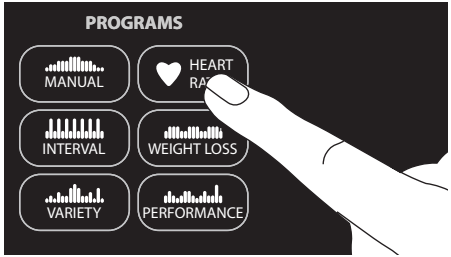

1. While the Precor banner scrolls, continually press one of the PROGRAMS keys to review its list of programs. Choose the program you want, and then press OK. For a description of each program, refer to *Programs.*

   Note: After pressing a PROGRAMS key, you can also scroll through the list of programs by pressing the navigational arrow keys.

2. A workout time blinks in the center display. Use the navigational arrow keys or the number keys to adjust the minutes (1–240 and NO LIMIT) and then press OK.

   Note: To review the NO LIMIT option or to adjust your workout time using the TIME+/- key while exercising, refer to *Changing the Workout Time*.

3. Enter your weight (1–999) and then your age (1–99).

   Note: To change a value (program, workout time, weight, or age) that you have already entered press PAUSE/RESET to return to the Precor banner. Select a program and reenter the appropriate values.

4. Hold onto a handrail and straddle the running belt.

5. Enter the safety code by pressing: 1, 2, 3, 4.

   An asterisk appears on the display with each entry.

   A 3-second countdown appears on the display, and then the running belt starts moving.

6. Step on to the running belt with the speed at or below 1 mph or 1 kph and begin exercising. Use the SPEED arrow keys to increase or decrease the speed of the running belt.

Selecting a User ID

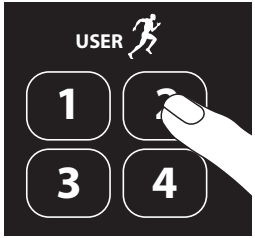

To start your exercise session using personal identification and preferences set up in *Adding a User*, take the following steps:

1. At the Precor banner, press the same USER key you designated in step 1, *Adding a User*.

   Note: Refer to *User Identification* if you have not previously chosen a user ID key.

   A welcome greeting scrolls across the display and the last program you used appears.

2. Press OK to select the program being displayed or choose another program using the navigational arrow keys or the PROGRAMS keypad. Refer to Selecting a Program for information about how to choose a program.

   Important: *If you make an entry error, press PAUSE/ RESET to return to the Precor banner.*

3. Enter the safety code by pressing: 1, 2, 3, 4

   An asterisk appears on the display with each entry.

4. Step on to the running belt with the speed at or below 1 mph or 1 kph and begin exercising. Use the SPEED arrow keys to increase or decrease the speed of the running belt.

Setting Display Preferences Before Exercising

While the Precor banner scrolls, you have the opportunity to change what units of measure appear on the display and designate safety code preferences.

1. As the Precor banner scrolls, press OPTIONS.
2. Use the arrow keys on the navigational keypad to display each option and press OK to select it.

Table 4. Display preferences before an exercise session

Menu Option	***Preferences***	***Effect***
UNITS	U.S. or METRIC	Determines which units of measure appear on the display.
SAFETY CODE	ENABLED or DISABLED	Sets safety code protection.

3. Follow the prompts on the display and return to the Precor banner.
4. Review cautionary information, found in *Changing the Units of Measure Display* and *Changing Safety Code Protection*.

Cooling Down After a Workout

Incorporate a cool-down period into your workout to help lower your heart rate and minimize muscle stiffness or soreness.

Note: You cannot switch to a different program or change display options during the cool-down period. To alter the cool-down period time limit, refer to *Setting a Cool-Down Time Limit*.

When you complete a program with a time limit or specified goal, you automatically enter a cool-down period. The running belt slows by about 20% and the incline returns to 0% grade. To readjust the speed or incline, press the arrow keys.

A workout summary appears at the end of the cool-down period. Refer to *Ending a Workout*.

Important: *If you exit a program before completing it, the cool-down period is bypassed.*

To prematurely end the cool-down period, do the following:

1. Grasp a handrail with one hand.
2. Press the red STOP button with your other hand. The treadmill enters pause mode.
3. Press STOP to view the workout summary.
4. Press STOP again to return to the Precor banner.

Important: *Hold on to a handrail extension. Step off the treadmill when the lift has stopped moving.*

Pausing During a Workout or the Cool-Down Period

Press the red STOP button or the PAUSE/RESET key to pause anytime during a workout or during a cool-down period. The pause mode has a time limit. If you do not resume exercising during that time, the display returns to the banner.

Note: The red STOP button and the PAUSE/RESET key can be used interchangeably.

1. To pause, press the red STOP button or the PAUSE/RESET key.

   The center display indicates the amount of time remaining in pause mode.

2. To resume exercising from pause mode, press QUICKSTART.
3. If needed, enter the safety code by pressing: 1, 2, 3, 4.

   An asterisk appears on the display with each entry.

4. Adjust the running belt speed using the SPEED arrow keys.

When you pause a program, you can change your program selection or display options. Refer to *Changing Programs in Mid-session* and *Changing Your Workout Display Options*. You cannot change your program or display options while paused during the cool-down period.

Ending a Workout

CAUTION: Hold on to a handrail when you near the end of your exercise session. The incline automatically recalibrates to a 0% grade. If the lift is moving, wait until it stops before stepping off the treadmill.

The running belt stops when you complete the automatic cool-down period. After the running belt stops, time stops accruing.

The workout summary shows your cumulative workout statistics including warm-up and cool-down periods. You can review your workout statistics for two minutes before the display automatically resets to the Precor banner.

Grand totals (cumulative statistics) in calories, distance and time appear if you have been accessing programs through a user ID.

A fitness score, associated with your fitness category, appears when you take the Fitness Test.

A heart rate analysis also appears, if you held onto the touch-sensitive handrail grips or wore a chest strap while exercising. Refer to *Heart Rate Analysis*.

If you choose to exercise with no set time limit, you must manually end a program by pressing the red STOP button or the PAUSE/RESET key. You can also press the SPEED ▼ key until the speed is reduced to zero and the running belt stops.

Note: The red STOP button and the PAUSE/RESET key can be used interchangeably. So, for the following steps, you may use the red STOP button instead of the PAUSE/RESET key.

To stop the running belt or end an exercise session at any time, do the following:

1. Grasp a handrail with one hand.
2. Press the PAUSE/RESET key with your other hand. The treadmill enters pause mode.
3. Press the PAUSE/RESET to view the workout summary.
4. Press the PAUSE/RESET again to return to the Precor banner.

Important: *Do not assume the treadmill is safe because of safety code protection. Never leave children unsupervised around the treadmill. Always turn Off and unplug the treadmill when it is not in use.*

Programs

This section describes the programs available on the treadmill. Use this section as a reference tool to better understand each program's purpose. For more information, refer to *Selecting a Program*.

The program descriptions are presented in menu selection order. To see a list of programs, refer to *PROGRAMS Keypad* and Table 3.

Choosing a Program

Choosing a program depends on your goals. If you are a beginner or returning to regular exercise, you can start a cardio-conditioning program to slowly return your body to a comfortable level of exercise. If you have been exercising and feel that you have an intermediate or advanced fitness level, you probably have established goals. The Precor web site (www.precor.com) can give you many ideas about fitness workouts and advice from the experts.

Several exercise choices on the treadmill are pre-programmed with recommendations for incline levels, pace, and alternating intervals. You always have the option to override the suggested levels with the exception of the Fitness Test.

Program Tips

- Begin at the Precor banner. Refer to *Workout Options*.
- A blinking column indicates your position as you progress through a program.
- Prior to choosing a program, you may press the OPTIONS key to access units of measure and safety code settings. Refer to *Setting Display Preferences Before Exercising*.
- To use the SmartRate feature, you need to specify your age and wear a chest strap or hold on to the touch-sensitive handrail grips. Refer to *Using SmartRate*.
- To exercise indefinitely in any program (except preset distance or calorie goal programs and the Fitness Test), an unlimited exercise time setting may be an available option. Refer to *Selecting a Program*.
- If your level of exertion becomes too great, reduce your pace or change the incline using the arrow keys to override each upcoming column in the program profile.
- To pause during a program, press PAUSE/RESET. Refer to *Pausing During a Workout or the Cool-Down Period*.
- When you complete a program that contains a time, distance or calorie goal, the automatic cool-down period begins. Refer to *Cooling Down After a Workout*.
- Cumulative workout statistics appear when you end your exercise session. Refer to *Ending a Workout*.

Manual Program

The Manual Program profile, available by pressing the MANUAL key, begins as a flat line. You control incline and speed settings using the INCLINE or SPEED arrow keys. The program profile reflects changes in all subsequent columns. The blinking column indicates your position in the program. A cool-down period occurs automatically when you end your workout.

Note: An exception to the cool-down period exists. Refer to *Advanced Programming and Troubleshooting* for more information.

To use the SmartRate feature, you need to specify your age by pressing the OPTIONS key and following the display prompts. To change the workout time, press the TIME +/– key. Refer to *Changing the Workout Time*.

Interval Programs

The Interval Programs, available by pressing the INTERVAL key, are among the best for conditioning your cardiovascular system. Each program raises and lowers your level of exertion repeatedly for the specified period of time.

Four programs let you choose the rest and work intervals according to your training regimen. In the Custom Interval Program, you specify the duration of the rest and work intervals.

Interval Program	*Rest Duration*	*Work Duration*
1-1 Interval	2 minutes	2 minutes
1-2 Interval	2 minutes	4 minutes
1-3 Interval	2 minutes	6 minutes
Custom Interval	user specified	user specified

Initially, the rest interval is set to 0% grade and 1 mph (1 kph). The work interval is set at a 3% grade and the speed remains at 1 mph (1 kph).

While exercising, you can vary the speed and change the preset incline using the SPEED or INCLINE arrow keys. The settings are repeated throughout the remainder of the program.

The display lets you know when the speed or incline levels are about to change, and indicates the levels of the next interval.

Note: Incline changes are limited to +/–5% grade variance from the previous incline level.

Random Program

The Random Program can be accessed by pressing the VARIETY key. Every time the Random program is selected, a different program profile appears. The columns that appear in the program profile show the preprogrammed incline. You can override the preprogrammed incline at any time using the INCLINE arrow keys.

The incline is preset to zero for the first column. The maximum change allowed between columns is +/–4%.

The running belt speed is completely under your control. You can adjust the pace by pressing the SPEED arrow keys.

Walk in the Park Program

The Walk in the Park Program, available by pressing the VARIETY key, has preprogrammed inclines in a fixed pattern. You determine whether the program uses a time, distance, or calorie goal. During your exercise session, you can change the speed and override the preprogrammed incline using the arrow keys.

Walk in the Park is a relatively easy walk, designed to increase muscle tone, cardio-conditioning, and endurance over several weeks.

Distance Goal Program

The Distance Goal Program, available by pressing the VARIETY key, lets you designate a fixed distance. When you reach your goal, the program ends and the automatic cool-down period begins.

After selecting the Distance Goal Program, specify your distance goal at the blinking prompt. Acceptable entries are from 0.1 to 50 (miles or kilometers). Use the navigational arrow keys or number keypad to change the value, and then press OK to begin.

Note: To change the units of measure settings from miles to kilometers, follow the instructions in *Changing Your Workout Display Options*.

Custom Programs

The two Custom Programs, are available if you select a user ID, and then press the VARIETY key. As you exercise, you customize the program by determining the speed or incline settings for each 1-minute column along the length of the profile. As each column elapses, the speed and incline for that column are stored in memory.

The subsequent columns repeat the last programmed speed or incline and are reflected in the program profile. Adjust the speed or incline using the INCLINE and SPEED arrow keys. When you complete the program, the settings are automatically recalled using the same user ID and program number.

Note: When you use the custom programs, you cannot select a distance or calorie goal. The duration of the custom program and the number of speed and incline settings is limited to available memory in the treadmill. The program does not end if the available memory is exhausted, but the display notifies you and further changes to speed or incline are not saved. Approximately, 1½ hours of recording time are available.

Clearing the Settings in a Custom Program

Perform the following steps to clear (delete) any speed and incline settings stored in a custom program.

1. At the Precor banner, select a user ID, and then press OK.
2. Display the custom program that you wish to clear.

   Important: *Clearing the speed and incline settings from a custom program permanently deletes them from memory.*

3. While the custom program name appears on the display, hold the red STOP button for about fourteen seconds. After a message appears on the display indicating that the settings have been cleared, you can release the key. Speed and incline information are reset to zero.

During the 14-second delay and before CLEARING scrolls across the display, you can release the red STOP button and no change will occur to the custom program settings.

Heart Rate Programs

The heart rate programs let you set a target for your heart rate. These programs (except Speed HRC) adjust the incline to maintain your heart rate within two beats per minute of the target heart rate while you exercise. To use these programs, you must enter your age and wear a chest strap so your heart rate can be monitored throughout the session. Refer to Table 5 for more information about the heart rate programs.

Important: *Consult your physician to determine the appropriate target heart rate for your age and fitness level. If your physician recommends a different target heart rate than the one that appears on the display, use the navigational arrow keys to change the target heart rate once you finish the warm-up period. Do not exercise over the recommended range.*

Heart Rate Program Tips

The Heart Rate programs enhance your overall cardiovascular fitness levels to help you achieve your weight loss and fitness goals. Read through the following tips before selecting a program. These tips provide general information regarding how the programs function. For more information and exercise suggestions, refer to the Precor web site at www.precor.com.

- Each program provides a 3-minute warm-up period. During this time, you may change the incline or speed.

  Note: When your target heart rate is achieved or the 3-minute period elapses, the warm-up period ends and the program begins.

- Each program automatically adjusts the incline to keep your heart rate at the selected target. After the warm-up period, pressing the INCLINE arrow keys no longer affects the incline motor. You can press the SPEED arrow keys to adjust the speed and press the navigational arrow keys to change the target heart rate during your exercise session. The display lets you know when changes to either are about to occur.
- Changing the target heart rate or speed affects the unit's ability to maintain your target heart rate in the preferred zone. It takes time for the treadmill to readjust the incline so that your heart rate remains on target. Check the SmartRate and the HEART RATE displays to see if you are maintaining your preferred zone and to determine your actual heart rate. For information about understanding your target heart rate, refer to *Heart Rate Features*.
- To adjust the time, press the TIME +/– key and use the navigational arrow keys or number keypad followed by OK to change the workout time.
- Cool down periods are incorporated into each program.

The table below briefly explains the purpose of each program.

Table 5. Heart Rate Programs

Program	*Description*
Basic HRC	Start with the Basic HRC Program if this is the first time you have used a heart rate program or you are returning to an exercise fitness routine.
Weight Loss HRC	Improve fat-burning results and increase endurance every time you exercise. This program helps you achieve weight loss and increase your aerobic capacity. Refer to *Heart Rate Features*.
Endurance HRC	Increase your aerobic activity and improve heart muscle strength and power. The Endurance HRC Program also provides a high intensity workout that enhances your fat-burning capability and increases your endurance. If you are beginning or returning to regular exercise, start with the Basic HRC Program or the Weight Loss HRC Program before moving on to the Endurance HRC Program.
Heart Health HRC	Add variety and increase your endurance. The Heart Health HRC Program is a good choice if you have been using the Weight Loss HRC Program for several weeks and wish to try something different. The Heart Health HRC Program splits the exercise session time equally between the weight loss and cardio-conditioning zones.
Speed HRC	Intensify your workout with intervals that consistently increase incline and speed. Be aware the Speed HRC Program is an intense program designed to increase your anaerobic threshold and improve your percentage of aerobic capacity. Best results occur if you are already in good physical shape and conditioning.

Visit our web site www.precor.com for more information and to supplement your workout with additional plans.

Weight Loss Programs

The Weight Loss Programs, available by pressing the WEIGHT LOSS key, begin with a warm-up period similar to the Heart Rate Programs.

The target heart rate for the rest intervals is set in the lower fat-burn range. During the work intervals, the target heart rate is initially set to 220 minus your age multiplied by 70%. For ideal weight loss, your heart rate should remain between 55% and 70% of your maximum aerobic heart rate. Refer to *Heart Rate Features*.

During your workout, set a comfortable pace. The display lets you know when the incline levels are about to change. You have the option to leave the setting alone or override it by pressing the arrow keys. When you make changes, the software repeats the changes in the remaining intervals.

The chart below briefly explains the purpose of each program.

Program	***Description***
Weight Loss	Use the this program if you are beginning or returning to a regular fitness routine. The workout time is fixed at 28 minutes and consists of seven 4-minute intervals. You are not prompted for a workout time.
Weight Loss HRC	Improve fat-burning results and increase endurance every time you exercise. This program helps you achieve weight loss and increase your aerobic capacity. You should wear the chest strap and use SmartRate to monitor your heart rate throughout the session. Refer to *Heart Rate Features*.
Calorie Goal	Attain your designated calorie expenditure as you promote aerobic activity and improve your cardio-vascular conditioning. When you select this program, specify your calorie goal at the blinking calorie prompt. Acceptable entries range from 10 to 5000 calories. Use the navigational arrow keys or number keys to change the value, and then press OK to begin.

5K Program

The 5K Program, available by pressing the PERFORMANCE key, provides a favorable distance to run or walk depending on your level of fitness. The distance is fixed at five kilometers (3.1 miles) and cannot be changed. The incline is preprogrammed. You can change the speed and override the preprogrammed incline using the arrow keys.

This program records your personal best time when you select a user ID and complete the program.

If you have a previous record, it scrolls across the display when the program begins. Refer to *Recording Your Personal Best Time*.

10K Program

The distance for the 10K course is fixed at ten kilometers (6.2 miles) and the incline is preprogrammed. You can change the speed and override the preprogrammed incline using the arrow keys.

This program records your personal best time when you select a user ID and complete the program.

If you have a previous record, it scrolls across the display when the program begins. Refer to *Recording Your Personal Best Time*.

Track Program

An oval track appears on the display; one lap around the track represents 440 yards (400 meters). A blinking LED (moving counterclockwise) indicates your position on the track. You control speed and incline.

If you wish to know the remaining time required to complete the current lap based on your current speed, select the SEGMENT TIME REMAINING display using the METRICS key. For more information, refer to *Changing Your Workout Display Options*.

One Mile Program

The distance is fixed at one mile and the incline is preprogrammed. You can change the speed and override the preprogrammed incline using the arrow keys.

This program records your personal best time when you select a user ID and complete the program.

If you have a previous record, it scrolls across the display when the program begins. Refer to *Recording Your Personal Best Time*.

Two Mile Program

The distance is fixed at two miles and the incline is preprogrammed. You can change the speed and override the preprogrammed incline using the arrow keys.

This program records your personal best time when you select a user ID and complete the program.

If you have a previous record, it scrolls across the display when the program begins. Refer to *Recording Your Personal Best Time*.

Fitness Test Program

The Fitness Test provides a 15-minute test consisting of five 3-minute sessions. You cannot adjust the speed or incline levels. When you complete the test, the display provides a fitness score and fitness category.

The Fitness Test measures the maximum amount of oxygen ($V0_2max$) the body can use for energy production during exercise. The higher the amount of oxygen that your body can use enhances your ability to exercise for prolonged periods of time. The test results can help you gauge the effectiveness of your current exercise routine and tailor it to meet your fitness goals.

Important: *You must wear the chest strap throughout the Fitness Test. If the heart rate reception is erratic, incorrect readings can occur and terminate the test.*

During the test, the treadmill gradually increases the incline and speed in specific stages. The keypads are disabled. The test ends if no heart rate is detected for 15 seconds, you surpass your target heart rate (85% of your maximum aerobic heart rate), or you complete the 15-minute time limit. Whatever stage you are at when the test ends determines your aerobic capacity and establishes your VO_2 max. Once you complete the test, a fitness score appears as part of the workout summary. Use it to compare to International Association of Firefighters (IAFF) standards.

Fitness Test Tips

Read through the following tips before selecting a fitness test.

- Sit and rest for at least five minutes prior to taking the test.
- You must enter your age and gender.
- You cannot change the distance, calorie or time goals or change to another program while in the midst of taking the Fitness Test.
- If you press the red STOP button during the test, the test ends and the display indicates whether the test was completed.

Important: *If you need to stop the running belt to regain control or reduce your heart rate, please do so. You can retake the fitness test later.*

Fitness Test Scores

When you finish the Fitness Test, the program stops the running belt and returns the incline to a 0% grade. No automatic cool-down period is provided after the test. A fitness score appears on the display as part of the workout summary.

This test provides a means of comparing your fitness level with the official fitness test of the IAFF. It is written using the Gerkin Protocol, which is the basis for the official IAFF fitness test and part of their Wellness and Fitness Initiative.

Table 6. Cardio respiratory Fitness Score Category–Females*

	Fitness Category		
Age in Years	***Low Fitness***	***Medium Fitness***	***High Fitness***
20–39	28 (or below)	28–33	33 (or above)
40–49	26 (or below)	26–31	31 (or above)
50–59	24 (or below)	24–28	28 (or above)
60 and over	22 (or below)	22–26	26 (or above)

* The test and analysis algorithm were developed by Dr. Neil Gordon of Cooper Clinic.

Table 7. Cardio respiratory Fitness Score Category–Males*

	Fitness Category		
Age in Years	***Low Fitness***	***Medium Fitness***	***High Fitness***
20–39	35 (or below)	35–42	42 (or above)
40–49	32 (or below)	32–39	39 (or above)
50–59	29 (or below)	29–36	36 (or above)
60 and over	24 (or below)	24–31	31 (or above)

* The test and analysis algorithm were developed by Dr. Neil Gordon of Cooper Clinic.

Exercise Session

This section describes how to use the navigational keys to affect changes to your exercise session. While exercising, you can:

- Change the program you are using
- Record your personal best time
- Change the workout time
- Choose between time-, distance-, or calorie-type goals
- Change the display to U.S. Standard or Metric
- Reset your target heart rate
- Change the safety code protection
- Display more workout statistics

Note: Prior to selecting a program, you can select preferences for units of measure and safety code protection. Refer to *Setting Display Preferences Before Exercising*.

Changing Programs in Mid-session

You can change programs in the middle of a session by selecting a new program from the PROGRAMS key menu. All accumulated workout statistics are transferred to the new program as you continue exercising.

Certain programs, such as the Fitness Test and heart rate programs, are not available for mid-session transfers due to set goals and program preferences. If this occurs, a message scrolls across the center display.

Recording Your Personal Best Time

The distance programs (5K, 10K, One Mile, Two Mile) record your personal best time when you select a user ID and complete the program.

During your exercise session, the distance traveled is being recorded whether or not the program goal is time, distance, or calories. If you transfer to a distance program and complete it, your personal best time indicates the cumulative workout time regardless of how many mid-session transfers may have occurred. Upon program completion, one of the following messages scrolls across the display as you begin the cool-down period.

NEW PERSONAL BEST	displays your best time.
MISSED PERSONAL BEST	displays the amount of time required to meet or surpass your personal best time.
SAME PERSONAL BEST	indicates that you met and maintained your personal best record.

Note: Your personal best time appears in minutes and seconds unless you surpass 60 minutes. Then, the display presents your workout time in hours and minutes.

Changing the Workout Time

To change the duration of your exercise session, take the following steps:

1. Press TIME +/–.
2. A workout time blinks in the center display. Use the navigational arrow keys or the number keys to adjust the time.
3. Press OK.

   A message scrolls across the display indicating that the new workout time has been accepted. If your attempt to change the workout time is not accepted, display messages scroll and indicate the reasons.

Some programs allow you to exercise indefinitely.

1. Once you begin a program, press the TIME +/– key.

   A workout time blinks in the center display.
2. Press the numbers 2, 4, 0 (240 minutes) and then press the navigational ▲ arrow key.
3. NO LIMIT appears on the display. Press OK to accept this value.

   Important: *If you choose this option, the automatic cool-down period is eliminated. You will need to incorporate a cool-down period at the end of your exercise session by accessing the Manual Program.*

Adjusting Program Goals

To designate a distance, calories, or time goal while exercising take the following steps:

1. Press the GOAL key until the goal you wish to use appears on the display: TIME, DISTANCE, or CALORIES.
2. When you are ready, press OK to select the displayed goal.
3. A blinking number appears indicating that the system is ready for adjustments to the goal. Use the number keys or navigational arrow keys to change the setting.
4. When you are ready, press OK. If the program you are using allows changes to goal settings, a prompt scrolls across the display indicating that your selection has been accepted.

   Note: Several programs on the treadmill are preset with time, distance or calorie goals and cannot be changed. If a program has a preset goal such as distance in the 5K Program or 28 minutes in the Weight Loss Program, you cannot change it. A message scrolls across the display indicating that changing the goal is not an available option.

Changing Your Workout Display Options

During an exercise session, the center display becomes a message bar. It can show additional workout statistics depending on user selections accessed through the METRICS menu.

To display more workout statistics or choose one among them, take the following steps:

1. Press METRICS.
2. % COMPLETE appears.
3. Use the navigational arrow keys to scroll through all the available displays. Refer to Table 8.
4. When you are ready, press OK to select a displayed metric or display the entire menu consecutively by selecting SHOW ALL.

   Note: To remove a scrolling statistic from the message bar, you need to reenter the METRICS menu and select a different workout statistic display or select METRICS OFF.

Table 8. Workout statistics available in the METRICS menu

METRICS Menu	*Description*
% COMPLETE	Shows how much of the program goal you have completed.
TIME IN ZONE	Displays the total time that your heart rate is within the range of 55% to 84% of your target heart rate.
SEGMENT TIME REMAINING	Indicates the amount of time, in minutes and seconds, that remain in the highlighted column of the profile before the next column begins blinking.
AVERAGE SPEED	Displays the average miles or kilometers per hour. The number that appears is determined by dividing the total distance travelled by the total accumulated workout time.
CALS/MIN	Displays the approximate number of calories burned per minute.
CALS/HR	Displays the approximate number of calories burned per hour.
WATTS	Shows your current energy expenditure level.
METS	Shows the metabolic units associated with your current energy expenditure level, derived from the calories per minute value and adjusted for your weight.
TARGET HR	Shows the current target heart rate setting.
AVG HEART RATE	Displays your average heart rate. The number is based on systematic sampling taken while you are exercising. A chest strap will give you a more accurate heart rate average than if you occasionally use the touch-sensitive handrail grips. If no heart rate reading occurred during your exercise session, three dashes appear when you change to this display.
ELEVATION GAIN	Presents the cumulative incline converted into elevation gained over the course of the program.
PACE	Displays your target speed in minutes and seconds per mile (or kilometer). For example, the number **4:23** indicates that your pace (speed at which you are moving) is 4 minutes and 23 seconds per mile.
SHOW ALL	Presents all the workout statistics in this menu in consecutive order.
METRICS OFF	Stops scrolling the workout statistics, found in this table, across the message bar.

Changing the Units of Measure Display

Display measurements can appear in either Metric or U.S. Standard. To change this setting while exercising, perform the following steps:

1. Press the OPTIONS key until UNITS appears.
2. Press OK.
3. The current setting appears in the display. Use the navigational arrow keys to toggle between the two options: U.S. or METRIC.
4. When you are ready, press OK to select the displayed unit of measure. A message scrolls across the display indicating that the unit of measure has changed as you continue your exercise session.

   CAUTION: If you change the units of measure, be sure to check the speed settings on the treadmill to verify that it is correct. Refer to *Setting the Speed Limit*.

Note: You can change the units of measure prior to exercising. For more information, refer to *Setting Display Preferences Before Exercising*.

Adjusting Your Target Heart Rate

Your target heart rate can be adjusted anytime during your exercise session by taking the following steps:

1. Press the OPTIONS key until TARGET HR appears.
2. Press OK.
3. A blinking number appears indicating the suggested target heart rate based on your age. Use the number keys or navigational arrow keys to change the setting.
4. When you are ready, press OK. A message scrolls across the display indicating your target heart rate zone as you continue your exercise session.

   Important: *Consult your physician to determine the appropriate target heart rate for your age and fitness level. If your physician recommends a different target heart rate than the one that appears on the display, change the target heart rate to match your physician's recommendation. Do not exercise over the recommended range.*

Changing Safety Code Protection

You can change the safety code setting while exercising, by taking the following steps:

1. Press the OPTIONS key until SAFETY CODE appears.
2. Press OK.
3. The current setting appears in the display. Use the navigational arrow keys to toggle between the two options.

Setting	Description
ENABLED	Causes the safety code prompt to appear prior to a workout and when returning from pause mode.
DISABLED	Does not require a safety code to operate.

CAUTION: Precor recommends that you leave the safety code ENABLED. If you choose to change the security of the treadmill, it is your responsibility to make sure that no children or persons unfamiliar with its operation are allowed on or near the treadmill. Do not assume the unit is safe because of safety code protection.

4. When you are ready, press OK to accept the displayed setting. A message scrolls across the display indicating the condition of safety code protection as you continue your exercise session.

Advanced Programming and Troubleshooting

Certain features remain hidden and can only be accessed using special key presses. Read this section if you want to:

- Set the pause or cool-down times
- Set the maximum speed limit
- View the odometer
- Display the number of hours you have used your treadmill
- View the software versions and part numbers
- Display the serial number
- Check the usage log
- Check the error log

Advanced Programming Tips

- Always start at the Precor banner.
- The advanced programming and diagnostic mode is accessed by pressing the red STOP button at the Precor banner. Any remaining key presses must occur quickly and without pause.
- The QUICKSTART key is disabled while in programming mode.
- The number keypad is disabled once you enter advanced programming mode. You need to use the navigational arrow keys to change the blinking prompts.
- Some keys provide the same functionality and can be used interchangeably while in advanced programming mode. These keys are:
  OK and ENTER
  PAUSE/RESET and the red STOP button
- The advanced programming prompts appear sequentially and in a menu format. Pressing the arrow keys in the navigational keypad moves you through the programs. Press OK to choose or accept the displayed selection. To return to the Precor banner without saving any changes, press PAUSE/RESET or the red STOP button.

Changing Treadmill Settings

Through a specific set of number key presses, you can customize the pause or cool down times and adjust the maximum limit for the running belt speed.

To access the menu and change the settings, perform the following steps:

1. At the Precor banner, press the following keys in sequence without pausing between selections:

   PAUSE/RESET, 5, 6, 7, 1

   Numbers appear on the display as you press the associated key.

Setting a Pause Time Limit

You can limit how long a user can pause while exercising on the unit by entering a time between 1 and 120 seconds (two minutes). For example, if you set the pause time limit to 60 seconds, the display automatically resets to the Precor banner if no key press occurs within one minute.

2. At the SET MAX PAUSE TIME prompt, press OK. Use the navigational arrow keys to change the time limit. Choose between 1 and 120 seconds (two minutes).
3. When you are ready, press OK to accept the displayed setting and move to the next program. Or, press PAUSE/RESET to return to the Precor banner.

Setting a Cool-Down Time Limit

You can limit how long a user cools down after exercising on the unit by entering a time between 0 and 5 minutes.

Important: *It is highly recommended that you set the cool-down period at or above three minutes. It takes time for a user's heart rate to return to a resting state after vigorous exercise. An effective cool-down period also reduces the amount of lactic acid in muscle tissue.*

4. At the SET COOL DOWN TIME prompt, press OK. Use the navigational arrow keys to display the available time limits. The default setting is 5 minutes.
5. When you are ready, press OK to accept the displayed setting and move to the next program. Or, press PAUSE/RESET to return to the Precor banner.

Setting the Speed Limit

You can set a maximum speed for the treadmill. This limits how fast the running belt moves and, consequently, the number of speed settings that are available to the user. The speed is displayed in miles per hour (mph) or kilometers per hour (kph) depending upon the units of measure (U.S. standard or Metric) selected through the OPTIONS key. The range of speeds available are 0.5 to 12 mph (0.8 to 20 kph).

Important: *If you select a number that limits the miles per hour, your change will not affect the kilometers per hour (and vice versa). The treadmill does not convert the speed entered in mph (U.S. standard) to kph (Metric). It stores separate numbers for the different units of measure. To enter both values, you must first reset the display to the appropriate unit of measure, and then change the speed limit in this program. Refer to Changing the Units of Measure Display.*

6. At the SET SPEED LIMIT prompt, press OK. Use the navigational arrow keys to select the desired running belt speed limit.
7. When you are ready, press OK to accept the displayed setting and return to the SET MAX PAUSE TIME prompt. Or, press PAUSE/RESET to return to the Precor banner.

Informational Displays

The treadmill provides information about its use (odometer and hour meter), as well as software version, serial number, usage log, and error codes. In general, you would only access this information if directed to do so by Precor Customer Support.

These instructions guide you through all eight informational displays. Pressing the OK key moves you through the displays. Pressing the navigational arrow keys cycles you through the menu selection. To exit, press PAUSE/RESET at any time.

Important: *Quick access to the informational displays is available if error messages have appeared on the display and have been recorded in the error log. This feature is usually reserved for service personnel. At the Precor banner, press and hold PAUSE/RESET or STOP for 4 seconds. If DIAGS - INFORMATION DISPLAY appears continue with step 2. If no errors are logged, STUCK KEY or STOP KEY appears. When you release the key, the Precor banner returns.*

Viewing the Odometer

1. At the Precor banner, press the following keys in sequence and without pause:
   PAUSE/RESET, 6, 5

   The numbers 6, 5 appear on the display as you press the associated key.

   Then DIAGS - INFORMATION DISPLAY scrolls across the display followed by ODOMETER.

2. Press OK to view the odometer value (cumulative miles traveled) or press the ▼ arrow key to move to the next informational display.

   Note: If the unit of measure is set to metric, then kilometers appears instead of miles.

3. When you are ready, press OK to move to the next display (hour meter).

Viewing the Hour Meter

HOUR METER scrolls across on the display.

4. Press OK to view the number of hours that the unit has been in use or press the ▼ arrow key to move to the next informational display.

   The treadmill tracks the elapsed minutes, but the value that appears is truncated to the nearest full hour.

5. When you are ready, press OK to move to the next display (software version).

Viewing the Software Part Numbers

U-BOOT SW scrolls across the display.

6. Press OK to view the upper board boot software part number (for example, 48996-100) or press the ▼ arrow key to move to the next informational display.

7. When you are ready, press OK to move to the next display (upper base application software part number).

   U-BASE SW scrolls across the display.

8. Press OK to view the upper base application software part number or press the ▼ arrow key to move to the next informational display.

9. When you are ready, press OK to move to the next display (lower board's serial number).

   LOWER SW scrolls across the display.

10. Press OK to view the lower board software version and part number.

11. Write the numbers below. You will need these numbers if you call Customer Support with questions. This information will help rule out any software-related problems:

    UPPER BOOT SW: _____

    UPPER BASE SW: _____

    LOWER SW: _____

12. When you are ready, press OK to move to the next display (serial number).

Viewing the Serial Number

SER. NUMBER scrolls across the display.

13. When you are ready, press OK to view the serial number or press the ▼ arrow key to move to the next informational display. The serial number is helpful when you contact Customer Support.

    Note: If no serial number has been entered, then SER. NUMBER NONE appears. Use the serial number found on the front panel, near the power cord.

14. If you have not already done so, write the serial number onto the Warranty Registration card. You can also register online at www.precor.com.

15. When you are ready, press OK to move to the next display (usage log).

Viewing the Usage Log

USAGE LOG scrolls across the display.

16. When you are ready, press OK to view each program, the number of times it has been used, and the associated cumulative minutes. The usage log is helpful in determining user preferences in program selection.

17. Use the navigational arrow keys to select and view usage information about each specific program.

18. When you are ready, press OK to move to the next display (error log).

Viewing the Error Log

ERROR LOG scrolls across the display.

19. When you are ready, press OK to determine how many errors exist in the error log or press the ▼ arrow key to cycle back to the ODOMETER display.

    Note: If there are no errors in the log, you will see NO ERRORS displayed.

20. Press OK to view the first entry in the error log.

21. To move through the error log, continue to press the ▼ arrow key. Each error code specifies when it occurred, listing the error code, odometer, hour meter and current (amps) values.

    Note: Use the ▲ arrow key to review error log entries.

22. Copy the error code information to paper so you can provide it to Customer Support if needed. Be sure to copy it exactly as shown.

23. When you no longer need the information in the error log, press QUICKSTART for at least four seconds to erase it. The message, NO ERRORS, appears on the display and remains static to let you know when the error log has been cleared.

    Important: *You cannot retrieve the error log once you have cleared it. You may want to resolve any issues you are experiencing with the treadmill before clearing the error log.*

24. When you are ready, press OK to cycle back to the ODOMETER, or press PAUSE/RESET to return to the Precor banner.

Troubleshooting Error Codes

If any error codes appear in the center display, turn the unit Off and On. If the error continues to occur, call an authorized service person for assistance. Refer to *Obtaining Service*.

Troubleshooting Heart Rate

Table 9 may help you understand and troubleshoot erratic heart rate readings.

Important: *A heart rate can only be detected when the Precor heart rate receiver is properly installed in the display and the treadmill is turned On. You must also wear the chest strap or hold on to both touch-sensitive handrail grips.*

To conduct electrical impulses from a user's heart, both touch-sensitive handrail grips must be grasped firmly for five to ten seconds. Usually, the concentration of salts in a person's perspiration provides enough conductivity to transmit a signal to the receiver in the display console. However, because of body chemistry or erratic heartbeats, some people cannot use the heart rate feature. A chest strap may provide better results. Refer to the *QuickStart Card* for proper placement of the chest strap.

Table 9. Erratic heart rate readings

What appears on the display	***Cause***	***What to Do***
Nothing	The heart rate receiver is not installed or it has been disconnected.	To receive Customer Support, refer to *Obtaining Service*.
Hr	A signal is being detected, but the transmission requires more time to establish a heart rate.	Be sure the chest strap is in direct contact with your skin. If using the touch-sensitive handrail grips, use both hands and make sure your hands are moist, not dry.
Pulsing HEART	The LED heart blinks when a heart beat is detected.	If the LED is pulsating, it indicates that the heart rate equipment is working properly.

Maintenance

It is important to perform the minor maintenance tasks described in this section. Failure to maintain the treadmill as described here could void the Precor Limited Warranty.

DANGER **To reduce the risk of electrical shock, always unplug the unit from its power source before cleaning it or performing any maintenance tasks.**

Inspection

Inspect the treadmill daily.

1. Look and listen for slipping belts, loose fasteners, unusual noises, worn or frayed power cords, and any other indications that the equipment may be in need of service. If you notice any of these, obtain service.

   Important: *If you determine that the treadmill needs service, make sure that the treadmill cannot be used inadvertently. Turn the unit Off, and then unplug the power cord from its power source. Make sure other users know that the treadmill needs service.*

2. Check for worn, frayed or missing safety lanyards. Replace missing or worn safety lanyards immediately. Do not exercise on the treadmill without attaching the safety clip to your clothing.

To order parts or to contact a Precor authorized service provider in your area, refer to *Obtaining Service*.

Cleaning the Equipment

Most of the working mechanisms are protected inside the hood and base of the treadmill. However, for efficient operation, the treadmill relies on low friction. To keep the friction low, the unit's running belt, staging platforms, and internal mechanisms must be as clean as possible.

Precor recommends the treadmill be cleaned before and after each workout. Use mild soap and water to dampen a soft cloth and wipe all exposed surfaces. This helps remove any dust or dirt.

CAUTION: Do not use any acidic cleaners. Doing so will weaken the paint or powder coatings and void the Precor Limited Warranty. Never pour water or spray liquids on any part of the treadmill. Allow the treadmill to dry completely before using.

Frequently vacuum the floor underneath the unit to prevent the accumulation of dust and dirt, which can affect the smooth operation of the unit. Use a soft nylon scrub brush to clean the running belt.

Storing the Chest Strap

Store the chest strap in a place where it remains free of dust and dirt such as, in a closet or drawer. Be sure to protect the chest strap from extremes in temperature. Do not store it in a place that may be exposed to temperatures below 32° F (0° C).

To clean the chest strap, use a sponge or soft cloth dampened in mild soap and water. Dry the surface thoroughly with a clean towel.

Checking the Alignment of the Running Belt

Proper belt alignment allows the belt to remain centered and ensures smooth operation. Realigning the belt takes a few simple adjustments. If you are unsure about this procedure, call Precor Customer Support. Refer to *Obtaining Service*.

CAUTION: Special care must be taken when aligning the running belt. Turn Off the treadmill while adjusting or working near the rear roller. Remove any loose clothing and tie back your hair. Be very careful to keep your fingers and any other object clear of the belt and rollers, especially in front of the roller and behind the deck. The treadmill will not stop immediately if an object becomes caught in the belt or rollers

1. The treadmill has adjustable rear feet. Make sure that the running surface is level. If the treadmill is placed on an uneven surface, adjusting the rear feet can help, but will not compensate for extremely uneven surfaces.
2. Turn the unit On.
3. Stand beside the treadmill and press QUICKSTART.

4. If needed, enter the safety code by pressing the following number keys in sequence: 1, 2, 3, 4.

   The running belt starts automatically after a 3-second countdown appears on the display.

5. Press the SPEED ▲ key until the display shows a speed of 3 mph (5 kph).

   CAUTION: If you hear any chafing or the running belt appears to be getting damaged, stop the running belt immediately by pressing the red STOP button. Contact Precor Customer Support.

6. Walk around to the rear of the unit and observe the belt for a few minutes. The belt should be centered on the running belt. If the belt drifts off center, you must make adjustments. Refer to *Adjusting the Running Belt*.

   Important: *Failure to align the belt may cause the belt to tear or fray, which is not covered by the Precor Limited Warranty.*

7. To stop the running belt, press the red STOP button.

8. Turn the treadmill Off.

Adjusting the Running Belt

If you are unsure about adjusting the running belt, call Precor Customer Support. Refer to *Obtaining Service*.

CAUTION: For your safety, use the I/O power switch to turn Off the treadmill before making any adjustments. Do not adjust the running belt when someone is standing on the unit.

1. Locate the right belt adjustment bolt in the rear end cap of the treadmill. Refer to Diagram 13.

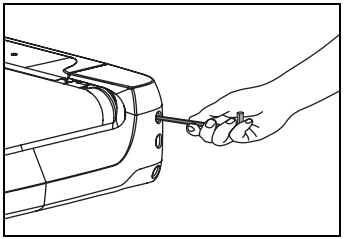

Diagram 13: Location of the adjustment bolt

To determine left and right, stand at the rear of the treadmill and face the display. Make all belt adjustments on the right rear corner bolt using the hex key provided.

- If the belt is off center to the LEFT, turn the adjusting bolt ¼ turn *counterclockwise*, which moves the running belt to the right.
- If the belt tracks off center to the RIGHT, turn the bolt ¼ turn *clockwise*; this moves the belt to the left.

Important: *Do not turn the adjusting bolt more than ¼ turn at a time. Overtightening the bolt can damage the treadmill.*

2. Recheck the alignment of the running belt by repeating the steps found in *Checking the Alignment of the Running Belt*.

Long-Term Storage

When the treadmill is not in use for any length of time, turn it Off. Make sure that the power cord is unplugged from its power source and is positioned so that it will not become damaged or interfere with people or other equipment.

Precor Residential Equipment Limited Warranty

PLEASE READ THESE WARRANTY TERMS AND CONDITIONS CAREFULLY BEFORE USING YOUR PRECOR INCORPORATED PRODUCT. BY USING THE EQUIPMENT, YOU ARE CONSENTING TO BE BOUND BY THE FOLLOWING WARRANTY TERMS AND CONDITIONS.

Limited Warranty

Precor Incorporated warrants all new Precor products to be free from defects in materials and manufacture for the warranty period set forth below. The warranty period commences on the invoice date of original purchase. This warranty applies only against defects discovered within the warranty period and extends only to the original purchaser of the product. Parts repaired or replaced under the terms of this warranty will be warranted for the remainder of the original warranty period only. To make claim under warranty, the buyer must notify Precor or their authorized Precor dealer within 30 days after the date of discovery of any nonconformity and make the affected product available for inspection by Precor or its service representative. Precor's obligations under this warranty are limited and set forth below.

Warranty Periods and Coverage

All residential products and commercial products used in the home are warranted for the following periods:

- Lifetime frame and welds
- 10 years parts and wear items
- 1 year labor
- Coverage for options and accessories defined below.

Options / Accessories

Many options or accessories have components that are connected internally or mounted inside the electronic console. The following guidelines determine the warranty for these components. If the internal components are installed by the factory or by an authorized dealer as part of the original sale and delivery, they have a warranty that is identical to the warranty of the equipment in which they are connected or mounted. If the internal components are not installed by the factory or by an authorized dealer as part of the original sale and delivery, they have a 90-day parts and labor limited warranty. All components that are not internally connected have 90-day parts only limited warranty. Satisfactory proof of purchase is required in all cases.

Conditions and Restrictions

This warranty is valid only in accordance with the conditions set forth below:

1. The warranty applies to the Precor product only while:
   a. It remains in the possession of the original purchaser and proof of purchase is demonstrated
   b. It has not been subjected to accident, misuse, abuse, improper service, or non-Precor modifications
   c. Claims are made within the warranty period
2. This warranty does not cover damage or equipment failure caused by electrical wiring not in compliance with electrical codes or Precor owner's manual specifications, or failure to provide reasonable and necessary maintenance as outlined in the owner's manual.

3. Warranty of all Precor products applies to residential use only and is void when products are used in a nonresidential environment or installed in a country other than where sold.
4. Except in Canada, Precor does not pay labor outside the United States.
5. Warranties outside the United States and Canada may vary. Please contact your local Dealer for details.

This limited warranty shall not apply to:

1. Software version upgrades
2. Cosmetic items, including, but not limited to the following: grips, seats, and labels.
3. Repairs performed on Precor equipment missing a serial number or with a serial tag that has been altered or defaced.
4. Service calls to correct installation of the equipment or instruct owners on how to use the equipment.
5. Pickup, delivery, or freight charges involved with repairs.
6. Any labor costs incurred beyond the applicable labor warranty period.

Disclaimer and Release

The warranties provided herein are the exclusive warranties given by Precor and supersede any prior, contrary or additional representations, whether oral or written. ANY IMPLIED WARRANTIES, INCLUDING THE WARRANTY OF MERCHANTABILITY OR FITNESS FOR A PARTICULAR PURPOSE THAT APPLY TO ANY PARTS DESCRIBED ABOVE ARE LIMITED IN DURATION TO THE PERIODS OF EXPRESS WARRANTIES GIVEN ABOVE FOR THOSE SAME PARTS. PRECOR HEREBY DISCLAIMS AND EXCLUDES THOSE WARRANTIES THEREAFTER. Some states do not allow limitation on how long an implied warranty lasts, so the above limitation may not apply to you. PRECOR ALSO HEREBY DISCLAIMS AND EXCLUDES ALL OTHER OBLIGATIONS OR LIABILITIES, EXPRESS OR IMPLIED, ARISING BY LAW OR OTHERWISE, WITH RESPECT TO ANY NONCONFORMANCE OR DEFECT IN ANY PRODUCT, INCLUDING BUT NOT LIMITED TO: (A) ANY OBLIGATION, LIABILITY, RIGHT, CLAIM OR REMEDY IN TORT, WHETHER OR NOT ARISING FROM THE NEGLIGENCE OF PRECOR OR ITS SUPPLIERS (WHETHER ACTIVE, PASSIVE OR IMPUTED); AND (B) ANY OBLIGATION, LIABILITY, RIGHT, CLAIM, OR REMEDY FOR LOSS OF OR DAMAGE TO ANY EQUIPMENT. This disclaimer and release shall apply even if the express warranty set forth above fails of its essential purpose.

Exclusive Remedies

For any product described above that fails to conform to its warranty, Precor will provide, at their option, one of the following: (1) repair; (2) replacement; or (3) refund of the purchase price. Precor Limited Warranty service may be obtained by contacting the authorized dealer from whom you purchased the item. Precor compensates Servicers for warranty trips within their normal service area to repair equipment at the owner's location. You may be charged a trip charge outside the service area. THESE SHALL BE THE SOLE AND EXCLUSIVE REMEDIES OF THE BUYER FOR ANY BREACH OF WARRANTY.

Exclusion of Consequential and Incidental Damages

PRECOR AND/OR ITS SUPPLIERS SHALL HAVE NO OBLIGATION OR LIABILITY, WHETHER ARISING IN CONTRACT (INCLUDING WARRANTY), TORT (INCLUDING ACTIVE, PASSIVE, OR IMPUTED NEGLIGENCE AND STRICT LIABILITY), OR OTHERWISE, FOR DAMAGE TO THE EQUIPMENT, PROPERTY DAMAGE, LOSS OF USE, REVENUE OR PROFIT, COST OF CAPITAL, COST OF SUBSTITUTE EQUIPMENT, ADDITIONAL COST INCURRED BY BUYER (BY WAY OF CORRECTION OR OTHERWISE) OR ANY OTHER INCIDENTAL, SPECIAL, INDIRECT, OR CONSEQUENTIAL DAMAGES, WHETHER RESULTING FROM NONDELIVERY OR FROM THE USE, MISUSE OR INABILITY TO USE THE PRODUCT. This exclusion applies even if the above warranty fails of its essential purpose and regardless of whether such damages are sought for breach of warranty, breach of contract, negligence, or strict liability in tort or under any other legal theory. Some states do not allow the exclusion or limitation of incidental or consequential damages, so the above limitation might not apply.

This warranty gives you specific legal rights, and you may also have other rights, which vary state to state.

Effective 01 January, 2003
P/N 36287-110

Thank You and Welcome to Precor

PRECOR® USA
move beyond®

To allow us to serve you better, please take a few moments to complete and return your warranty registration.

YOU MAY ALSO REGISTER ONLINE AT

www.precor.com/warranty

If you have questions or need additional information, contact your local dealer or call Precor Customer Support at 800-347-4404.

Fold along dotted line and tape closed before mailing.

RET.

PRECOR® USA
Precor Incorporated
20031 142nd Avenue NE
PO Box 7202
Woodinville, WA 98072-4002

PLACE
STAMP
HERE

TELL US ABOUT YOUR NEW PRECOR PRODUCT

Date of Purchase: Month Day Year

Product Serial Number: The serial number is located on the shipping box and on the product.

Purchased from: Dealer Name

Please indicate the type of product purchased:

- ❑ Elliptical Fitness CrossTrainer™ (EFX®)
- ❑ Treadmill
- ❑ Strength Training System
- ❑ StretchTrainer™
- ❑ Cycle
- ❑ Stair Climber

TELL US ABOUT YOU

❑ Mr.
❑ Mrs.
❑ Ms.

First Name Middle Initial Last Name

Street Address Apt./Suite:

City State Zip Code

Area Code Telephone

Your Email Address

Gender:
- ❑ Male
- ❑ Female

Marital status:
- ❑ Married
- ❑ Divorced
- ❑ Widowed
- ❑ Never been married

Age:
- ❑ Under 18
- ❑ 18-24
- ❑ 25-34
- ❑ 35-44
- ❑ 45-54
- ❑ 55-64
- ❑ 65+

Annual household income:
- ❑ Under $50,000
- ❑ $51,000-75,000
- ❑ $76,000-100,000
- ❑ $101,000-150,000
- ❑ $151,000+

What are your fitness goals?
- ❑ Weight loss/management
- ❑ Muscle tone enhancement
- ❑ Cardiovascular improvement
- ❑ Overall health
- ❑ Increase energy and flexibility
- ❑ Stress reduction
- ❑ Rehabilitation
- ❑ Other

TELL US ABOUT YOUR PURCHASE

Purchase (check all that apply):
- ❑ First Precor product
- ❑ Replaces a Precor product of the same type
- ❑ Replaces same type of product – different brand
- ❑ Addition to equipment currently owned

What factors MOST influenced your decision to purchase your Precor product (choose up to three):
- ❑ Precor reputation
- ❑ Prior use of Precor product(s)
- ❑ Design/appearance
- ❑ Special product features
- ❑ Physician recommendation
- ❑ Rebate or sale price
- ❑ Quality/durability
- ❑ Warranty
- ❑ Value for the price

How did you FIRST become aware of Precor products (choose only one):
- ❑ A gift
- ❑ Friend/relative
- ❑ Physician
- ❑ Fitness club
- ❑ Internet
- ❑ News report or product review
- ❑ Magazine advertisement or article
- ❑ Print advertisement
- ❑ In-store display or demonstration
- ❑ Other

Please detach and mail in the warranty registration within ten days of purchase.

Effective 28 June 2004
P/N 45623-102

Notes:

M9.57 Low Impact Treadmill

Product Specifications

Length:	88 in (224 cm)
Width:	35 in (89 cm) with handrails
Height:	64 in (163 cm)
Weight:	508 lb (231 kg)
Shipping weight:	549 lb (249 kg)
Running surface:	60 in x 20 in (153 cm x 51 cm)
Motor:	2.0 hp continuous duty
Power:	120 VAC, 50/60Hz
Speed:	0.5–12 mph (0.8–20 kph)
Incline:	-3%–15% grade
Frame:	Powder-coated steel
Regulatory Approvals:	FCC, ETL, EN957

Product Features

CSAFE Compatible
Entertainment Option Available
QUICKSTART™
SmartRate®
Heart Rate Telemetry (chest strap included)
Touch Heart Rate
User IDs (4)
Safety Code

Programs

Manual	Weight Loss
Interval	Weight Loss
1-1 Interval	Weight Loss HRC*
1-2 Interval	Calorie Goal
1-3 Interval	Performance
Custom Interval	Track
Variety	5K
Random	10K
Walk in the Park	1 Mile
Distance Goal	2 Mile
1 Custom †	Fitness Test*
2 Custom †	
Heart Rate	
Basic HRC*	
Weight Loss HRC*	
Heart Health HRC*	
Endurance HRC*	
Speed HRC*	

† Appears when you select a user ID.

Electronic Readouts

% Complete	METS
Average Heart Rate*	Pace
Average Speed	Profile
Calories	Segment Time Remaining
Calories per Hour	SmartRate*
Calories per Minute	Speed
Distance	Target Heart Rate
Elevation Gain	Time
Goal	Time Elapsed
Heart Rate*	Time in Heart Rate Zone*
Incline	Time Remaining
Language	Units
Maximum Heart Rate*	Watts

* Use of chest strap or touch-sensitive handrail grips is required.

Precor, C, CrossRamp, EFX, M, Move Beyond, and SmartRate are registered trademarks of Precor Incorporated. Crosstrainer, QuickStart, and StretchTrainer are trademarks of Precor Incorporated.
Copyright 2006 Precor Incorporated.
Specifications subject to change without notice.
www.precor.com

PRECOR® USA
move beyond®

Precor Incorporated
20031 142nd Ave NE
P.O. Box 7202
Woodinville, WA USA 98072-4002
1-800-347-0404

NOTICE:
Precor is widely recognized for its innovative, award winning designs of exercise equipment. Precor aggressively seeks U.S. and foreign patents for both the mechanical construction and the visual aspects of its product design. Any party contemplating the use of Precor's product designs is hereby forewarned that Precor considers the unauthorized appropriation of its proprietary rights to be a very serious matter. Precor will vigorously pursue all unauthorized appropriation of its proprietary rights.

M9.57 OM 49363-102, en
Warranty # 36287-110, en
Registration Card# 45623-102, en
15 September 2006

QUICKSTART™

PRECOR® USA
move beyond®

CAUTION: Before using the treadmill, read all these instructions. Failure to do so may result in serious injury.

- Do not allow children or those unfamiliar with its operation, on or near this equipment.
- Before beginning any fitness program, see your physician for a thorough physical examination. Seek advice from your physician to learn the target heart rate appropriate for your fitness level.
- At the beginning of a workout, straddle the belt by placing your feet firmly on the right and left staging platforms.
- Always face the display and use the handrail for balance. Never attempt to turn around on the treadmill while the running belt is moving.
- If you feel pain, faintness, or dizziness, stop exercising immediately.

Use the Safety Clip

Always attach the safety clip to your clothing before each workout. A tug on the lanyard trips the safety switch inside the display and stops the running belt. If the safety switch trips while you are exercising, the treadmill retains your workout statistics and enters pause mode. To resume your workout, reattach the safety clip to your clothing, enter the password, and then press QUICKSTART.

M9.57

Low-Impact Treadmill

Workout Tips

- Before and after a workout, gently stretch your lower body and back to help prevent stiffness or soreness.
- At the beginning of a workout, take several minutes to bring your heart rate into your target zone (shown in Diagram D on the other side of this card).
- To display your heart rate, wear a chest strap or use both hands to grasp the touch-sensitive handrail grips.
- Incorporate a cool-down period into your workout to help lower your heart rate and minimize muscle stiffness and soreness.

Begin Your Workout with QUICKSTART

To begin exercising immediately without personalizing your exercise session, take the following steps.

1. Turn ON the treadmill, using the I/O power switch located beneath the front of the unit, near the power cord.
2. Step on the treadmill. Face the display and straddle the running belt.
3. Attach the safety clip to your clothing.
4. Hold on to the handrail with one hand and press QUICKSTART with the other. If needed, enter the password. Refer to your owner's manual.

   A 3-second countdown appears, and then the running belt starts moving. The Manual Program begins.
5. Step on to the running belt with the speed at 1 mph (1 kph), and begin exercising.
   - To increase or decrease the incline or speed, use the INCLINE or SPEED arrow keys.
   - To pause, hold onto a handrail with one hand while you press the PAUSE/RESET key with the other.
6. To adjust the time goal, use the TIME +/- key. When the blinking time prompt appears, use the number keypad to adjust the time. Press OK.

   Note: When you reach your time goal, you automatically enter a cool-down period.
7. Complete the cool-down period and a workout summary appears. Press the right selection key to review your cumulative distance and average speed. The cumulative number of calories burned appears in an upper display.
8. Remove the safety clip from your clothing and hold on to a handrail as you step off the treadmill.
9. To prevent unauthorized use, turn the treadmill OFF.

   Note: To personalize your exercise experience, refer to *Workout Options* in the owner's manual.

M9.57 QSC 49362-102, 15 September 2006, en

Choose a Program

- Determine your level of fitness: beginner, intermediate, or advanced.
- Determine your immediate goal: endurance training, cardio-conditioning, or weight loss.

If you are a beginner, start a cardio-conditioning program to slowly adjust your body to a comfortable level of exercise. Over a recommended 8-week period, you will increase your endurance and strength while improving flexibility.

If you have been exercising and feel that you have reached an intermediate or advanced fitness level, you probably have established goals for yourself.

For all fitness levels, plan to exercise at a comfortable pace for 20 to 30 minutes a day. Wear a chest strap to monitor your heart rate. Supplement your plans with fitness workouts from the Precor web site (www.precor.com). The Precor web site provides numerous fitness workouts and expert advice to help you reach your fitness goals.

Monitor Your Heart Rate

The SmartRate and heart rate displays provide visual cues that help you adjust your fitness routine to reach your goals. Use these features to keep your heart rate within the target zones.

Wear a Chest Strap

During a workout, the heart rate features appear on the display when you wear a chest strap. To receive an accurate reading, the chest strap needs to be in direct contact with your skin. After you put on the chest strap, face the display console for a minimum of 15 seconds. This allows the receiver in the console to recognize the signal from the chest strap.

1. Carefully dampen the back of the strap with tap water (Diagram A).

   Important: *Do not use deionized water. It does not have the proper minerals and salts to conduct electrical impulses.*

2. Adjust the strap and fasten it around your chest. The strap should feel snug, not restrictive (Diagram B).
3. Make sure that the chest strap is right side up, lies horizontally across your chest, and is centered in the middle of your chest (Diagram C).

Diagram A

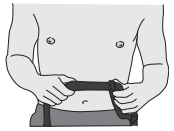

Diagram B

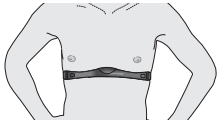

Diagram C

When these steps are complete, you are ready to view your heart rate!

Touch-Sensitive Handrail Grips

Several Precor products incorporate touch-sensitive heart rate grips on the handrails. If you prefer to use the touch-sensitive handrail grips, use both hands. Make sure both hands are moist (not dry) when you grasp the touch-sensitive handrail grips.

SmartRate® Features

When you begin an exercise session, a blinking segment in the SmartRate display appears if you entered your age during the setup phase. The blinking segment indicates the current zone of your heart rate.

The calculation used for the heart rate target zone is your maximum aerobic heart rate:
(220 minus your age) multiplied by a percent.

For the ideal weight loss range, your heart rate should remain between 55% and 70% of your maximum aerobic heart rate. To improve your overall cardiovascular and respiratory fitness level, maintain your heart rate between 70% and 85% of your maximum aerobic heart rate.

For the greatest benefits, maintain your heart rate in either zone for 30 minutes or more at least three times a week.

CAUTION: Your heart rate should never exceed 85% of your maximum aerobic heart rate or go above your target zone (Diagram D).

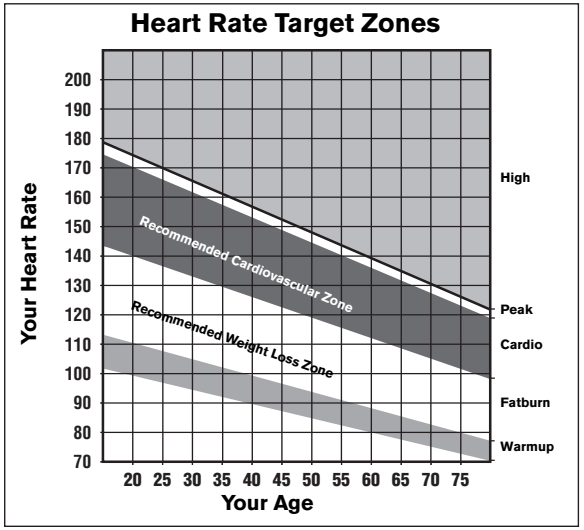

Diagram D

Cool Down After Your Workout

Cooling down is an important aspect of your workout because it helps reduce muscle stiffness and soreness by transporting excess lactic acid out of the working muscles. Cooling down for at least three minutes helps provide a smooth transition that allows your heart rate to return to its normal, non-exercising state.

PRECOR® USA
move beyond®

Precor Incorporated
20031 142nd Avenue NE
P.O. Box 7202
Woodinville, WA USA 98072-4002
www.precor.com

HR INFO 48140-103

©2006 Precor Incorporated

Assembly Guide

PRECOR® USA
move beyond®

M9.57

Low-Impact Treadmill

Thank you for choosing Precor. For proper installation, please read this guide thoroughly and follow the assembly instructions. If you do not assemble the treadmill according to these guidelines, you could void the Precor Limited Warranty.

Obtaining Service

You should not attempt to service the treadmill except for minor belt adjustments and maintenance tasks as described in the owner's manual. If any items are missing, contact your dealer. Should you need more information regarding customer support numbers or a list of Precor authorized Service Centers, visit the Precor web site at www.precor.com/corp/contact.

Unpacking the Equipment

The treadmill is carefully tested and inspected before shipment. The unit is shipped in two boxes. Ask for help from two or more people to unpack and assemble the treadmill.

Required Tools

- String
- Bubble level
- Wire tie cutter

Installation Requirements

Follow these installation requirements when assembling the unit:

- **Assemble the unit near the location where you plan to use it.**
- **Provide ample space around the unit.**
  Open space around the unit allows for easier access.
- **Set up the unit on a solid, flat surface.**
  A smooth, flat surface under the unit helps keep it level. A level unit has fewer malfunctions.
- **Open the box and assemble the components in the sequence presented in this guide.**
- **Insert all fasteners with your fingers.**
  Use your fingers to properly align and thread the fasteners. This helps alleviate cross-threading. Do not fully wrench tighten fasteners until instructed to do so.

  Important: *When wrench tightening, the head of the fastener should be flush with the product. If it is not, cross-threading has occurred. Do not attempt to rework the assembly as more damage to the equipment will occur. Contact Customer Support. Refer to* Obtaining Service.

Hardware Kit

Fasteners		Quantity
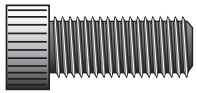	(A) Socket head screw, black (5/16-18 x 3/4-inch)	8
	(B) Flat washer, black (5/16 x .688)	12
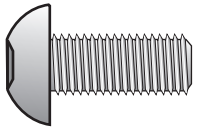	(C) Buttonhead screw, silver (5/16-18 x 3/4-inch)	6
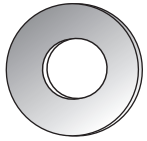	(D) Flat washer, silver (5/16 x .688)	6
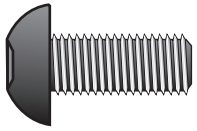	(E) Buttonhead screw, black zinc (5/16-18 x 3/4-inch)	4

6 – Power cord clip (F)

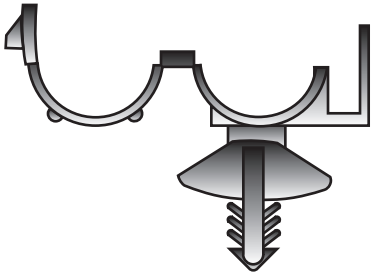

1– ¼-inch hex key (G)

1 – 3⁄16-inch hex key (H)

Assembly Steps

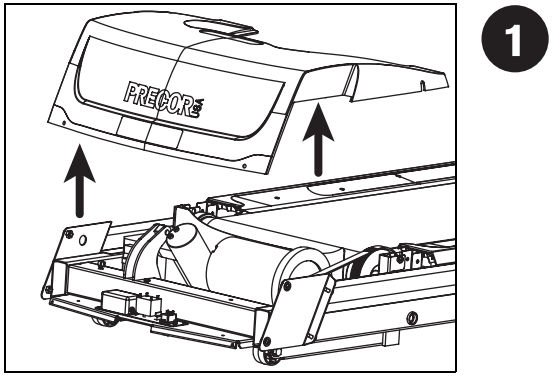

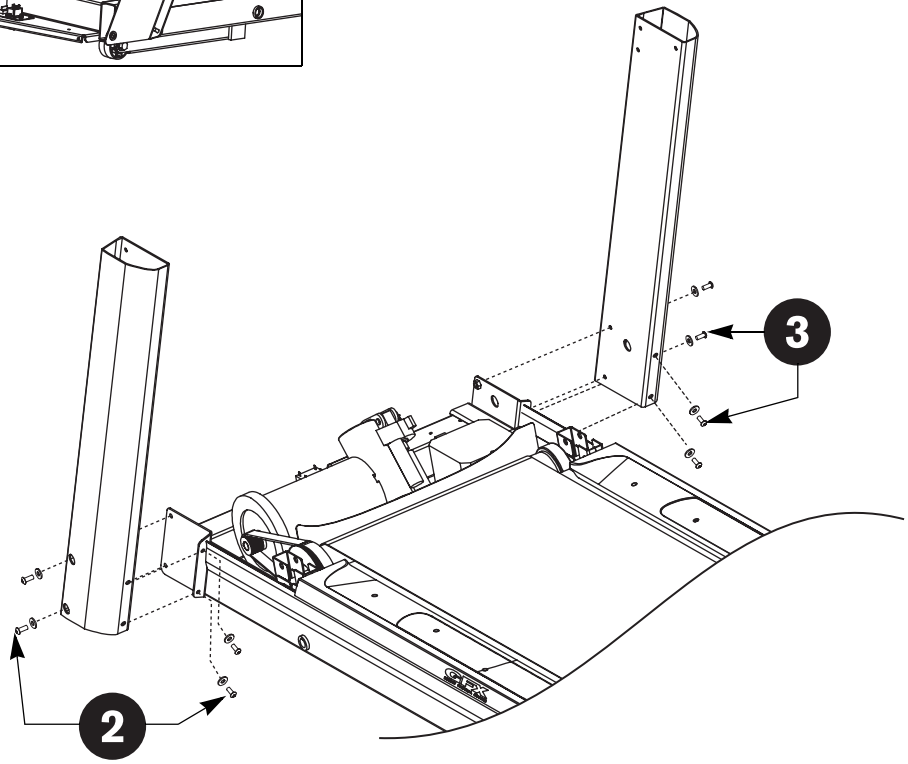

1. Remove the hood and set it aside.

2. Place the left side upright support into the base frame side bracket.

   Secure the upright support to the side bracket using four socket head screws (A) and four washers (B).

   Finger tighten.

3. Place the right side upright support into the base frame side bracket.

   Secure the upright support to the side bracket using four socket head screws (A) and four washers (B).

   Finger tighten.

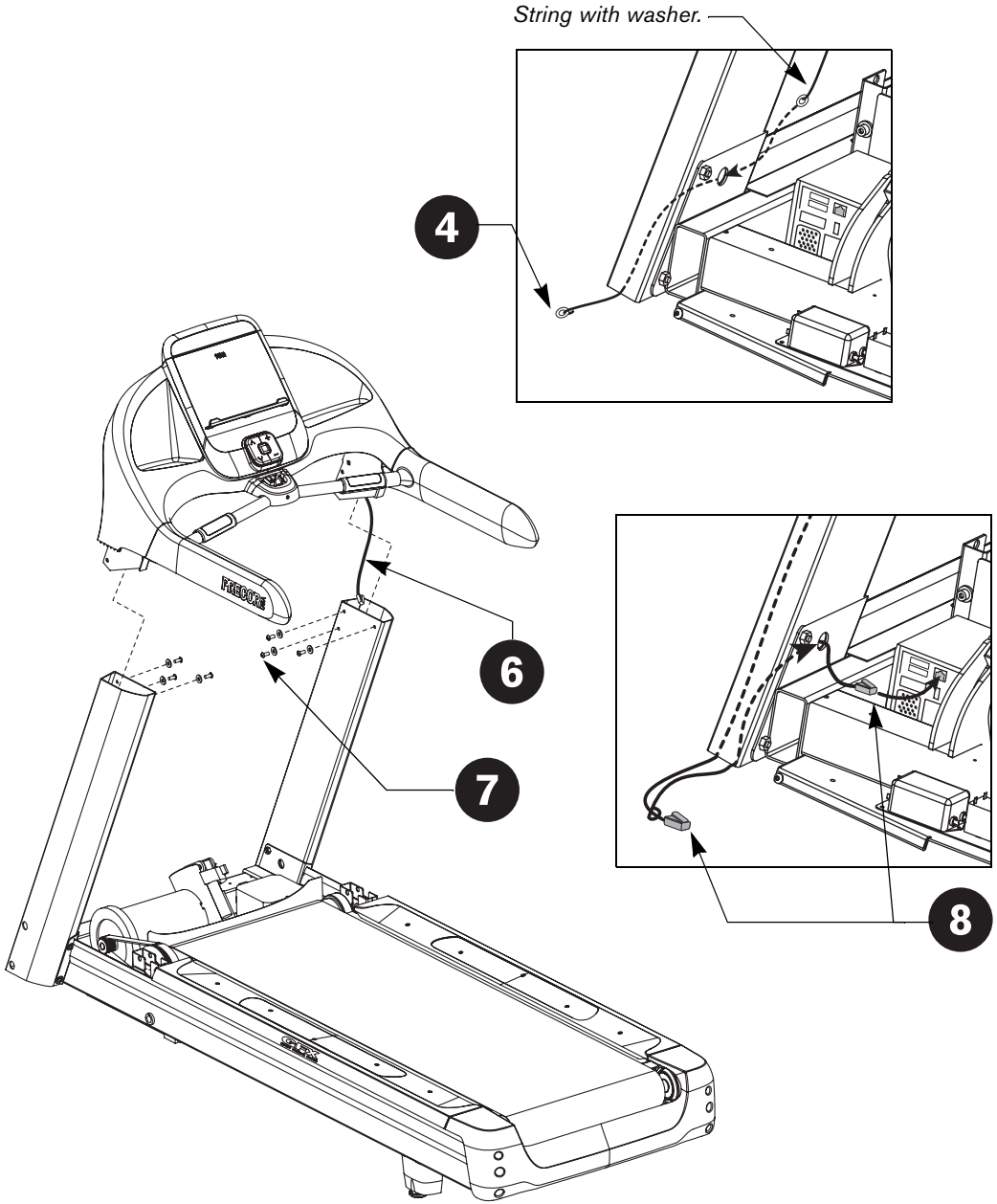

4. Tie a string to a washer (D) and feed the washer through the lower side bracket hole in the right upright support. As the washer falls to the floor, leave the upper end of the string hanging out the side bracket hole. Remove the washer from the other end of the string.

5. Remove any tape or wire ties that secure the display cable. Unwrap the cable and remove the kinks.

6. Ask your assistant to hold the display console above the upright supports while you feed the cable through the right upright support. Make sure the cable connector rests on the floor at the base of the upright support.

7. Lower the display console, align, and secure it to the upright supports using six buttonhead screws (C) and six washers (D). Finger tighten.

   Important: *Do not wrench tighten the screws until the unit has been fully assembled. Make sure the fasteners do not pinch the cable. Cables damaged by improper installation will not be covered by the Precor Limited Warranty.*

8. Tie the string to the cable connector. Pull the cable through the side bracket hole in the base frame. Remove the string and then, connect the cable to its receptacle.

   Note: An audible click is heard when the cable is properly attached. Place excess cable inside the upright support.

9 Replace the hood and secure it.

Important: *Use your fingers to properly align and thread the four hood fasteners. Wrench tighten the two side fasteners before wrench tightening the two fasteners that secure the front of the hood.*

Secure the hood using four buttonhead screws (E) and four washers (B).

Start with the side fasteners and then wrench tighten all four fasteners.

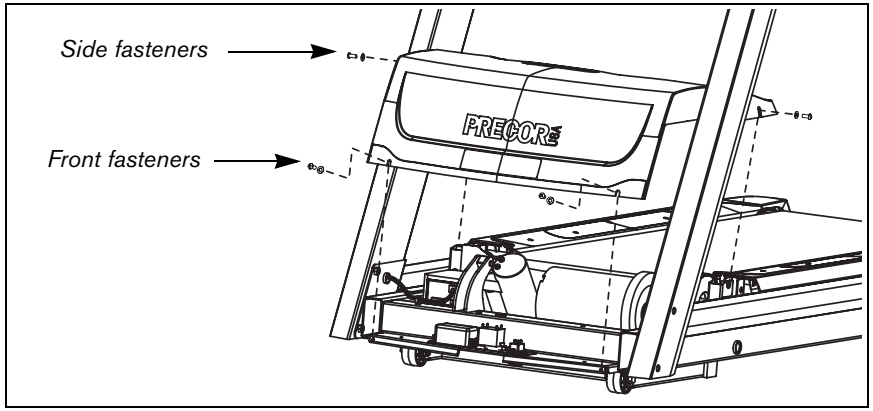

10 Tighten all mounting screws.

1. Start at the base and alternately tighten the eight fasteners that secure the upright supports to the base assembly.
2. Wrench tighten the six screws that secure the display console to the upright supports.

   CAUTION: Be aware of the handrail extensions when you are working around the front of the unit. It is easy to bump your head or sustain other injuries if you ignore the location of the handrail extensions.

11 Attach the power cord clips (F).

Important: *Use the power cord clips to secure the power cord to the base frame beneath the hood. This reduces the possibility that the power cord will get pinched or damaged by the incline lift movement. If the power cord runs along the length of the treadmill, use the power cord clips to secure it to the side rail.*

1. Wrap the clip around the power cord near the power switch at the front of the treadmill and clamp it shut.

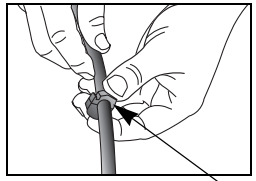

2. Insert the serrated portion of the clip into the hole located under the front of the unit on either side of the power switch.

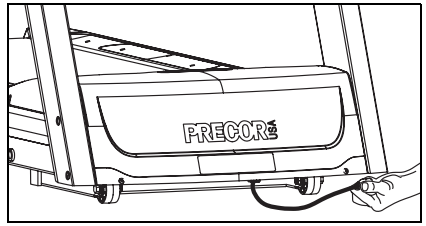

3. Place the clips, as needed, along the length of the power cord while you redirect it to the power outlet. The holes, found in the frame beneath the side rail, are spaced 12 inches (31 cm) along the length of the side rail.

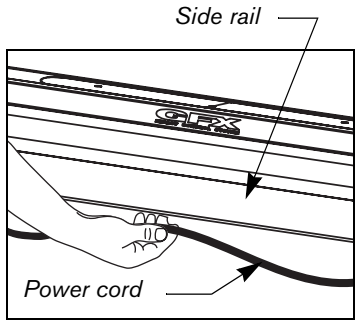

12 Level the unit. Before using on the unit, make sure it is level.

Important: *If the load is not equally compensated, you will feel excessive vibration or movement at the display console. Adjust one rear foot at a time. Do not raise the unit beyond ¾-inch (2 cm).*

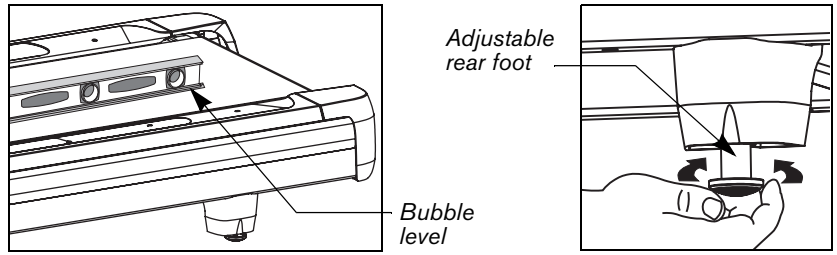

1. Place a bubble level on the running belt to see if the treadmill is level. If the treadmill needs leveling, continue to step 2.
2. Situate yourself next to the adjustable rear feet.
3. Ask a capable assistant to lift the rear portion of the treadmill (using proper lifting techniques).
4. Level the treadmill by adjusting the rear feet as needed.

   Important: *If the unit is placed on a slightly uneven surface, rotating the rear feet can help, but will not compensate for extremely uneven surfaces.*
5. Recheck the level of the treadmill with the bubble level on the running belt after each adjustment.
6. Make adjustments to the rear feet so that the your weight on the treadmill is distributed evenly.

13 Plug the power cord into an appropriate outlet.

Important: *The treadmill requires a dedicated, grounded circuit. A 20-amp circuit is recommended. Refer to* Grounding Instructions *in the* owner's manual.

14 Checking the Alignment and Adjusting the Running Belt

Proper belt alignment allows the belt to remain centered and ensures smooth operation. Realigning the belt takes a few simple adjustments. If you are unsure about this procedure, contact Precor Customer Support. Refer to *Obtaining Service*.

To check the alignment:

CAUTION: Special care must be taken when aligning the running belt. Turn Off the treadmill while adjusting or working near the rear roller. Remove any loose clothing and tie back your hair. Be very careful to keep your fingers and any other object clear of the belt and rollers, especially in front of the roller and behind the deck. The treadmill will not stop immediately if an object becomes caught in the belt or rollers.

1. Turn the unit On.
2. Stand beside the treadmill and press QUICKSTART.
3. If needed, enter the password. Refer to your owner's manual.

   The running belt starts automatically after a 3-second countdown appears on the display.
4. Press the SPEED ▲ key until the display shows a speed of 3 mph (5 kph).

   CAUTION: If you hear any chafing or the running belt appears to be getting damaged, stop the running belt immediately by pressing the red STOP button. Contact Precor Customer Support.
5. Walk around to the rear of the unit and observe the belt for a few minutes. The belt should run centered along the running bed. If the belt drifts off center, you must make adjustments. Refer to the next section.

   Important: *If the belt needs alignment, make the adjustments at once. Failure to align the belt may cause the belt to tear or fray, which is not covered by the Precor Limited Warranty.*
6. To stop the running belt, press the red STOP button.
7. Turn the treadmill Off.

To adjust the running belt:

If you are unsure about adjusting the running belt, contact Precor Customer Support (refer to *Obtaining Service)*.

CAUTION: For your safety, use the power switch to turn Off the treadmill before making any adjustments. Do not adjust the running belt when someone is standing on the unit.

1. Locate the right belt adjustment bolt in the rear end cap of the treadmill.

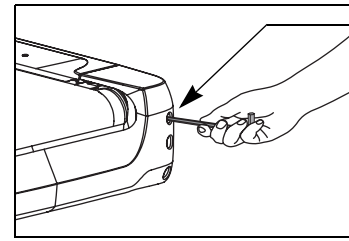

   To determine left and right, stand at the rear of the treadmill and face the display. Make all belt adjustments on the right rear corner bolt using the hex key provided.

   - If the belt is off center to the LEFT, turn the adjusting bolt ¼ turn counterclockwise, which moves the running belt to the right.
   - If the belt is off center to the RIGHT, turn the bolt ¼ turn clockwise, which moves the belt to the left.

   Important: *Do not turn the adjusting bolt more than ¼ turn at a time. Overtightening the bolt can damage the treadmill.*
2. Recheck the alignment of the running belt.

Precor Incorporated
20031 142nd Avenue NE
P.O. Box 7202
Woodinville, WA USA 98072-4002

©2006 Precor Incorporated
www.precor.com
M9.57 AG 49433-102, en
15 September 2006