SOLEUSAIR®

Powered by GREE

Model
SG-WAC-12HCE
Electronic Heat & Cool Window A/C
Operating Instructions

eco-friendly

V.130227

Thank you for choosing a Soleus Air powered by Gree Air Conditioner. This owner's manual will provide you with valuable information necessary for the proper care and maintenance of your new product. Please take a few moments to thoroughly read the instructions and familiarize yourself with all the operational aspects of your new air conditioner.

For your own records, please attach a copy of your sales receipt to this manual. Also, write the store name/location, date purchased, and serial number below:

Store Name: _____

Location: _____

Date Purchased: _____

Serial Number (located on back of unit): _____

IMPORTANT SAFETY INSTRUCTIONS

Before installing and using your air conditioner, please read this owner's manual carefully. Store this manual in a safe place for future reference. Your safety and the safety of others is very important to us. Please pay attention to all safety messages outlined in this owner's manual.

WARNING: To reduce the risk of fire, electrical shock or injury when using your air conditioner, follow the following basic precautions:

- Plug into a grounded 3 prong outlet.
- Do not remove the ground prong.
- Do not use a plug adapter.
- Do not use an extension cord.
- Unplug the air conditioner before servicing
- Use two or more people to move and install the air conditioner

This is a safety alert symbol.
This symbol alerts you to potential hazards that can harm you or others or even cause death.
All safety messages will directly follow the safety alert symbol and/or the words "DANGER" or "WARNING".

⚠ DANGER

⚠ WARNING

Failure to immediately follow these instructions may cause serious injury or even death.

All Safety messages alert you of potential hazards, how to reduce the chance of injury, and what can happen if instructions are not followed correctly.

ELECTRICAL REQUIREMENTS

⚠ WARNING

Electrical Shock Hazard

Plug into a grounded 3 prong outlet.
Do not remove the ground prong.
Do not use an adapter
Do not use an extension cord.
Failure to follow these instructions can result in death, fire, or electrical shock

The electrical ratings for your air conditioner are listed on the model and serial number label located on the front left side of the unit (when facing the front).

Specific electrical requirements are listed in the chart below. Follow the requirements below for the type of plug on the power supply cord.

Power Supply Cord	
NEMA 6-20P 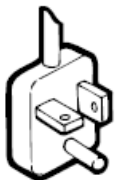	■ 208/230-volt (198min. - 253 max.) ■ 0-16 amps ■ 20-amp time-delay fuse or circuit breaker ■ Use on single outlet circuit only.

Recommended Ground Method

For your personal safety, this air conditioner must be grounded. This air conditioner is equipped with a 3 prong power supply cord with a grounded plug. To minimize the possibility of electrical shock, the cord must be plugged into a 3 prong outlet and grounded in accordance with all local codes and ordinances. If a 3 prong outlet is not available, it is the customer's responsibility to have a properly grounded 3 prong outlet installed by a qualified electrician.

It is the customer's responsibility:

- To contact a qualified electrician
- To assure that the electrical installation is adequate and in conformance with the National Electrical Code, ANSI/NFPA 70 - latest edition, and all local codes and ordinances.

Copies of the standards listed may be obtained from:
National Fire Protection Association
One Batterymarch Park
Quincy, Massachusetts 02269

LCDI Power Cord and Plug

This air conditioner is equipped with an LCDI (Leakage Current Detection and Interruption) power cord that is required by UL. This power supply cord contains state-of-the-art electronics that sense leakage current. If the cord is damaged and leakage occurs, power will be disconnected from the unit.

The test and reset buttons on the LCDI Plug are used to check if the plug is functioning properly. To test the plug:

1. Plug power cord into a grounded 3 prong outlet
2. Press RESET (on some units a green light will turn on).
3. Press the TEST Button, the circuit should trip and cut all power to the air conditioner (on some units a green light may turn off.
4. Press the RESET button for use. You will hear a click and the A/C is not ready for use.

NOTES:

- The RESET (A) button must be engaged for proper use.
- The power supply cord must be replaced if it fails to trip when the TEST button (B) is pressed and the unit fails to reset.
- Do not use the power supply cord as an ON/OFF switch. The power supply cord is designed as a protection device.
- A damaged power supply cord must be replaced with a new power supply cord from Soleus Air Powered by Gree.
- The power supply cord contains new user serviceable parts. Opening the tamper-resistant case voids all warranty and performance claims.

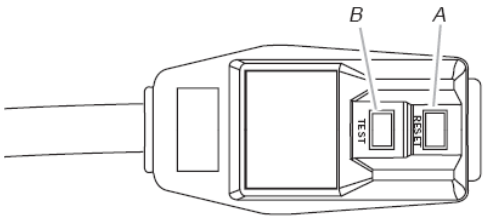

NOTE: Your units power cord and plug may differ from the one shown.

PARTS LIST

Parts supplied (on some models)
Check that all parts are included in parts package.

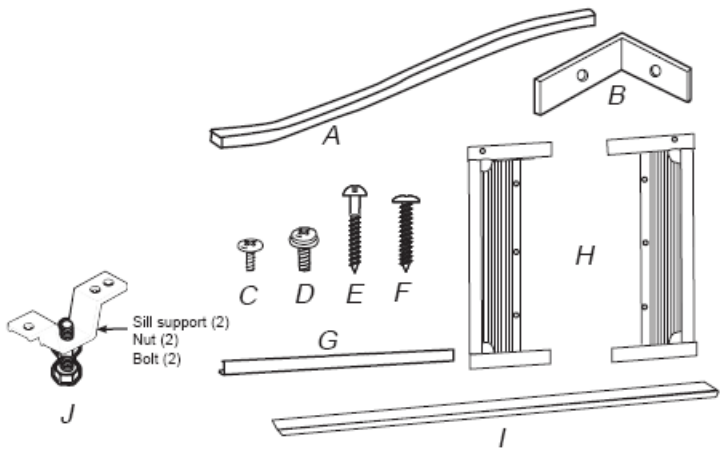

A. Foam window sash seal
B. Window lock brackets (2)
C. #10 x ¼" pan-head Phillips screws (6)
D. #10 x ⅜" pan-head Phillips screws (3 or 7)
E. #10 x ¾" round-head screws (6)
F. #10 x ½" pan-head Phillips screws (3)
G. Top channel
H. Side curtains (2)
I. Foam seal
J. Sill support (2) Nut (2) Bolt (2)

TOOLS NEEDED

- Large Flathead Screwdriver
- Tape Measurer
- Adjustable Wrench or Pliers
- Pencil
- Level
- Socket Wrenches
- Phillips Head Screwdriver

Non-Hardware Packing List

- Window Air Conditioner
- AAA Batteries (2)
- Top Mounting Rail
- Foam Top Mounting Rail Seal Strip
- Accordion Panels (2)
- Side Retainer (2)
- Window Sash Seal
- Foam Seal for Bottom Rail
- Owner's Manual

Location Requirements

When installing the unit, make sure that the cabinet louvers (A) are not obstructed. Air must be able to pass freely through the cabinet louvers to provide adequate cooling.

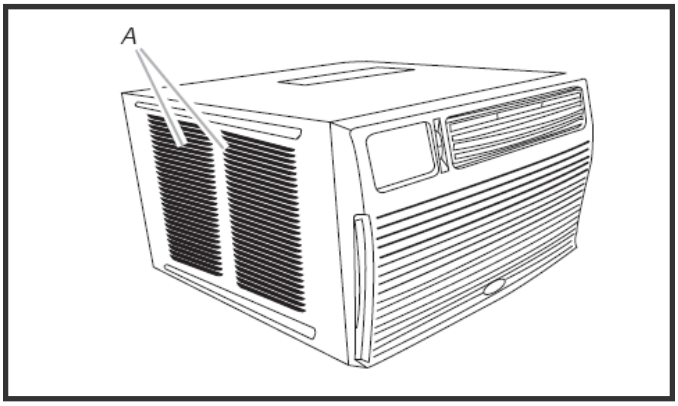

SPECIFICATIONS

- Noise level is measured at a distance of 3.28 ft away from the front of the unit in cooling mode.
- Power consumption is measured when the fan runs at the highest speed setting.
- These specifications are for reference only. For actual data, please refer to the rating label on the back of the unit.

Model	SG-WAC-12HCE
Power Supply (Ph/V/Hz)	1/230~208/60Hz
Rated Cooling Capacity (BTU/h)	11,600/11,200
Rated Heating Capacity (BTU/h)	10,700/8,500
Cooling Power Input (Watts)	1180/1140
Heating Power Input (Watts)	3575/2765
Rated Current Cooling (Amperage)	5.5/5.9
Rated Current Heating (Amperage)	16/14.6
EER	9.8/9.8
Noise Level dB(A)	58
CFM	280
Dehumidifying Capacity	62 Pints per day
Product Dimensions (W” x H” x D”)	22.625 x 15.375 x 24
Package Dimensions (W” x H” x D”)	25.625 x 17 x 27.25
Net/Gross Weight (Lbs)	91.3/110
Refrigerant Type	R-410A
Plug Type	NEMA 6-20P

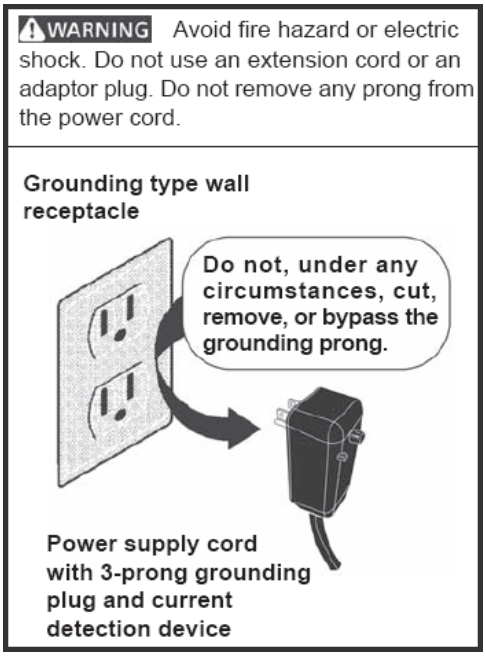

DISCLAIMER

ALL INFORMATION AND THE TECHNICAL SPECIFICATIONS PRESENTED IN THIS USER’S MANUAL ARE THE PRESENTATION OF THE MANUFACTURER. SOLEUS INTERNATIONAL HAS NOT CONDUCTED INDEPENDENT TEST TO THE INFORMATION AND THE SPECIFICATIONS PRESENTED HEREWITHIN.

INSTALLATION & ASSEMBLY INSTRUCTIONS

Window Preparation

Please read all instructions prior to installing your air conditioner. Two people are recommended to install this product. If a new electrical outlet is required, have the outlet installed by a qualified electrician before installing the unit.

Before installing the unit, check the dimensions of your window to make sure the air conditioner will fit. This unit is made to fit inside a standard double-hung window. Make sure the window is in good shape and able to firmly hold the needed screws. If not, make repairs prior to installing the unit.

Model	SG-WAC-12HCE
Unit Height	15 3/8”
Unit Width	22 5/8”
Min. Window Opening Height	16 1/4”
Min. Window Width	27”
Max Window Width	39”

Storm Window Requirements

A storm window frame will not allow the air conditioner to tilt properly which in turn will keep it from draining properly. To adjust for this, attach a board or piece of wood to the sill. The board or wood piece should have a depth of at least 1 1/2”. Make sure the board or piece of wood is approximately 1/2” higher than the storm window frame. This will allow the air conditioner to tilt enough for proper drainage. (See FIG. 2).

FIG. 1

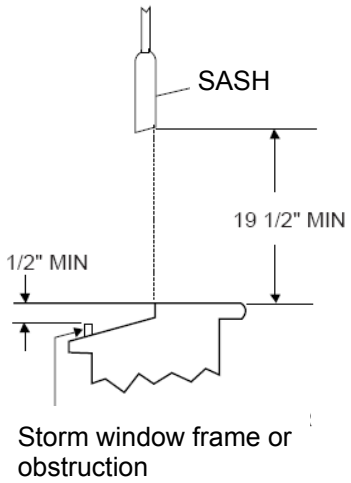

FIG. 2

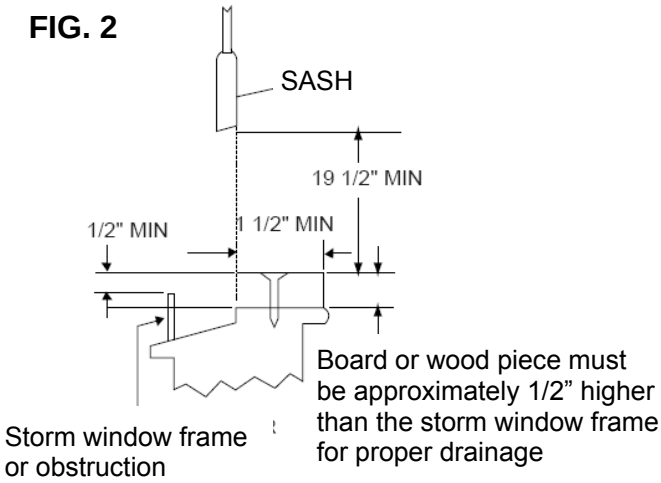

Prior to Installing the Air Conditioner

1. Check for anything that could block airflow. Check the area outside of the window for things such as shrubs, trees, or awnings. Check the inside area to make sure curtains, drapes, or blinds will not prevent proper airflow.
2. Check the available electrical outlet. The power supply must be the same as shown on the unit serial nameplate (located on the left side of the unit, near the front faceplate). Be sure the outlet is close enough for the power cord to reach.
3. Carefully unpack the air conditioner. Remove all packing material and make sure the floor is protected when removing. Due to the large size of this air conditioner, two people should move the unit together.

CAUTION

When handling the unit, be careful to avoid cuts from the sharp metal edges and aluminum fins on the front and rear coils.

INSTALLATION & ASSEMBLY INSTRUCTIONS - WINDOW MOUNTING

REMOVE CHASSIS

1. Pull down the front panel and remove the filter (FIG. 1 below)
2. Lift the front panel upwards to remove and place to the side.

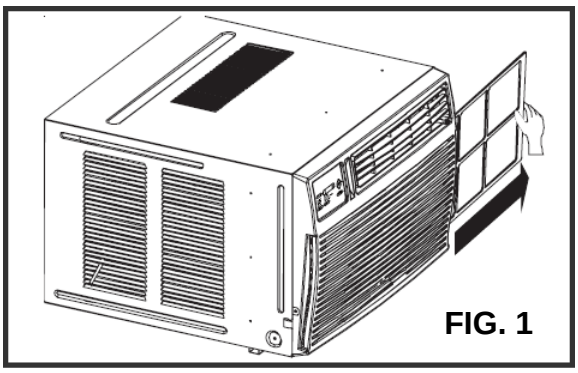

FIG. 1

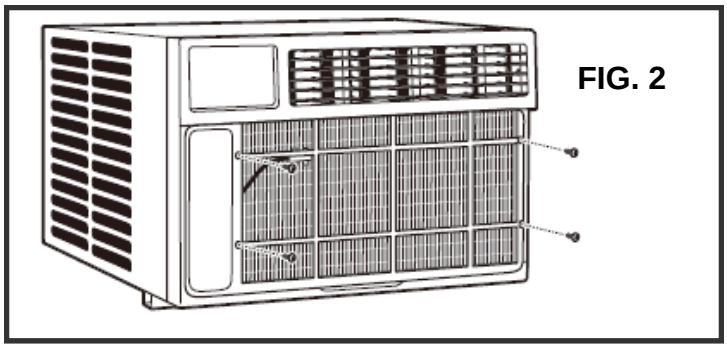

FIG. 2

3. Locate the four faceplate screws and remove. These screws will need to be re-installed prior to mounting the air conditioner (FIG. 2 above)
4. After removing the screws, gently pull away the faceplate from the air conditioner cabinet (FIG. 3 & 4).

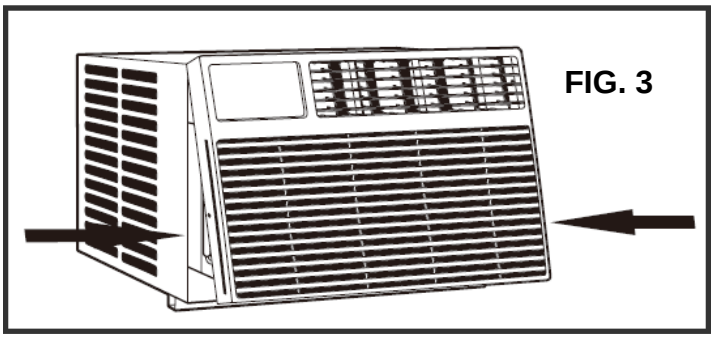

FIG. 3

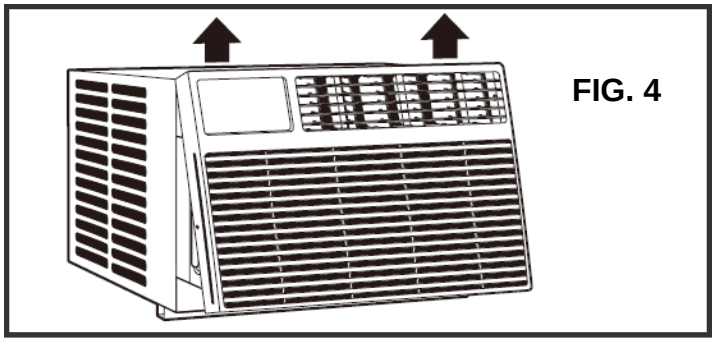

FIG. 4

5. Remove the two control panel screws from the front panel (FIG 5).

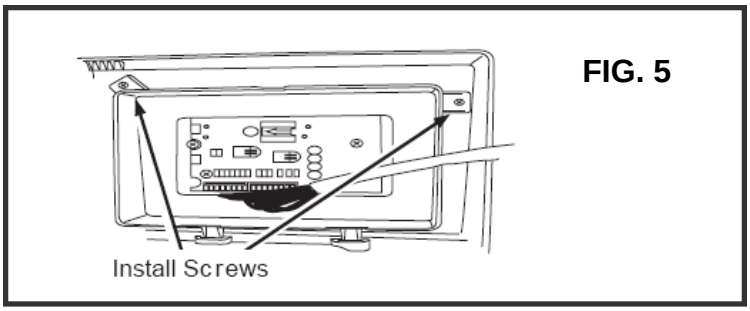

FIG. 5

INSTALLATION & ASSEMBLY INSTRUCTIONS - WINDOW MOUNTING

REMOVE CHASSIS

6. Remove the shipping screws from the top of the unit and the sides of the cabinet if installed (FIG 6 & 7).

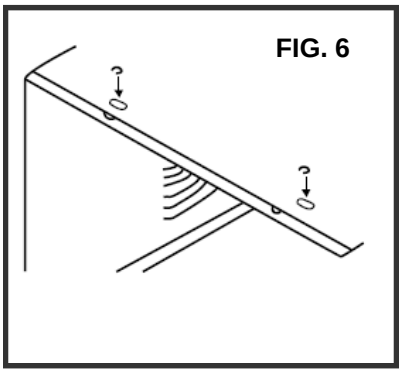

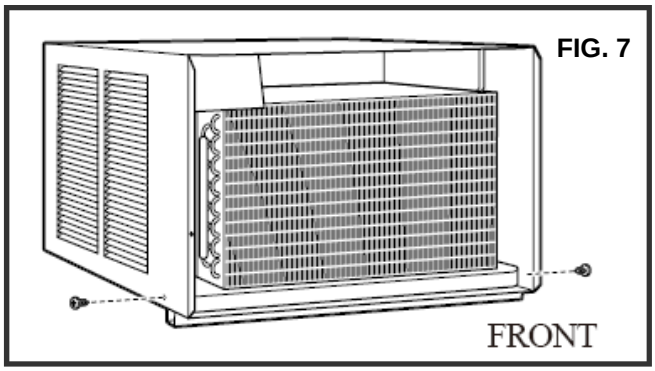

7. Hold the cabinet while pulling on the base handle to carefully remove the unit. Do not pull or lift near the top of the unit (FIG 8).

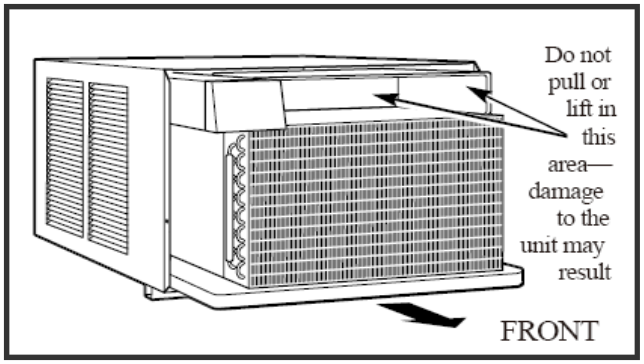

FIG. 8

ASSEMBLY & INSTALLATION (CONT.)

Top Angle Rail and Side Bracket Installation

1. Place the air conditioner on a hard flat surface.
2. Locate the foam gasket and top angle rail
3. Attach the foam gasket to the top angle.
4. Install top angle side to cabinet rail using the #10 3/8" Pan Head Phillips screws as shown in FIG 7.

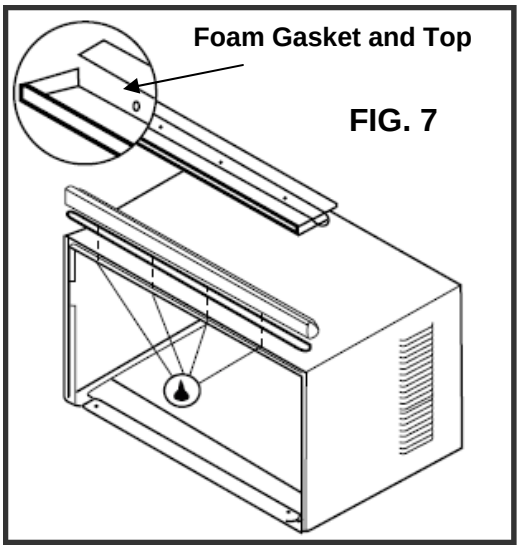

5. Insert top and then bottom of right-hand curtain into the top and angle rails on the cabinet.

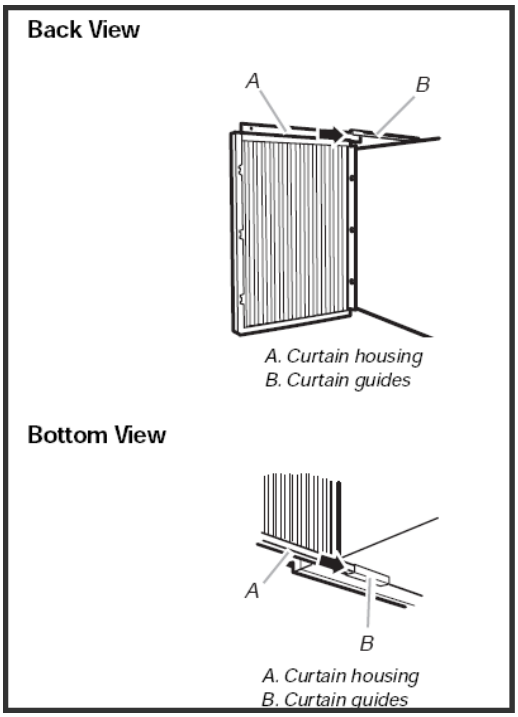

6. Extend right-hand curtain outward to insert the #10 x 1/4" pan-head Phillips screw, screw curtain into middle hole of the cabinet. Repeat for left side. FIG 8

7. Attach foam adhesive seal along the bottom of the curtain bottom channel. FIG 9

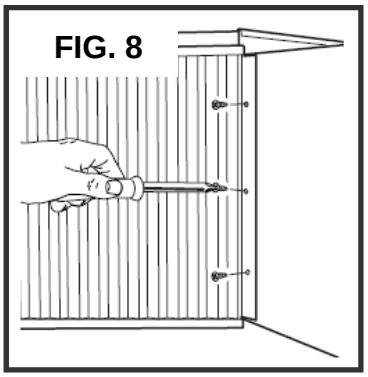

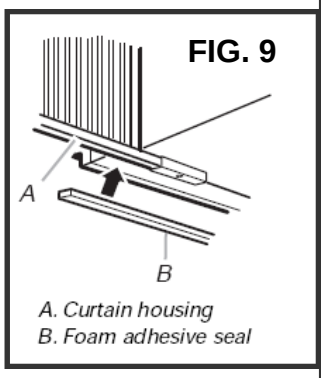

Placing the Cabinet Inside the Window

1. Open the window and place the cabinet in the middle of the window sill.
2. Make sure the bottom rail is seated over the window sill as shown below. Bring the window down temporarily behind the top angle rail to hold the cabinet in place.

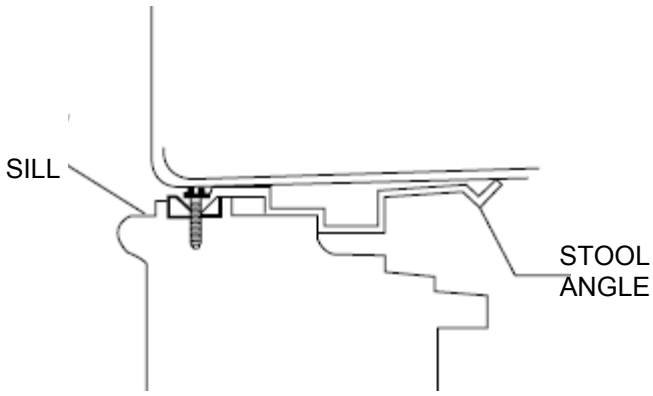

3. Fasten cabinet to window sill (B) using three #10 x 1/2" pan-head Phillips screws (A). Pre-drill holes if needed.

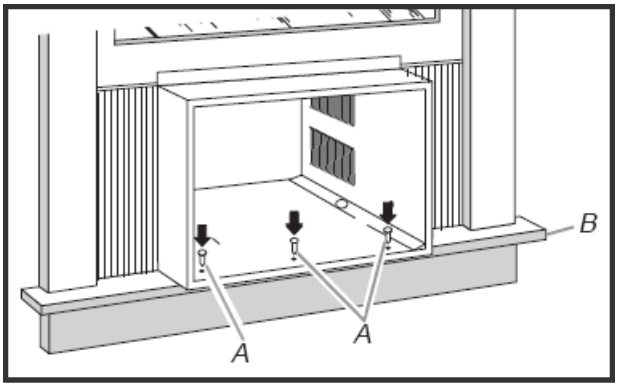

ASSEMBLY & INSTALLATION (CONT.)

Install Cabinet into Window

- Handle air conditioner gently.
- Be sure your air conditioner cabinet does not fall out of the opening during installation or removal.
- The location where the power cord exits the air conditioner should be no more than 4 ft from a grounded 3 prong outlet.
- Do not block the louvers on the front panel.
- Do not block the louvers on the outside of the air conditioner.

1. Center empty cabinet in window. Check that lower rail of air conditioner cabinet is behind and against back side of windowsill. Maintain a firm hold on the air conditioner cabinet. Lower window sash to hold cabinet in place. Top channel must be on inside room of window sash.

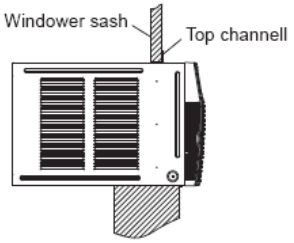

2. Measure the distance between the right-hand side of the cabinet and the inside of the window channel.
3. Repeat for the left side. Adjust the cabinet until the distance on each side is the same.

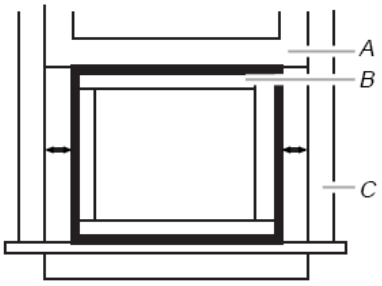

A. Window sash
B. Empty cabinet
C. Window channel

Extend the Accordion Panels

1. Carefully raise the window to expose the accordion panel and panel frame. Loosen the locking screws so the accordion panels slide easily. Pre-drill 3/32” holes if needed.

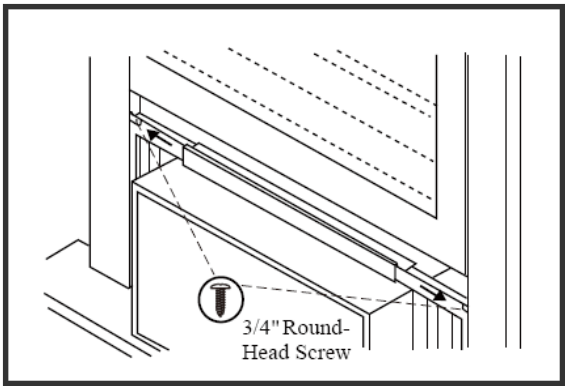

2. Extend each panel to completely fill the width of the window. Tighten the locking screws when the panels are fully extended.

Install the Window Lock and Sash Seal

1. Trim the sash seal to fit the width of the window. Insert the sash seal into space between the upper and lower sashes.

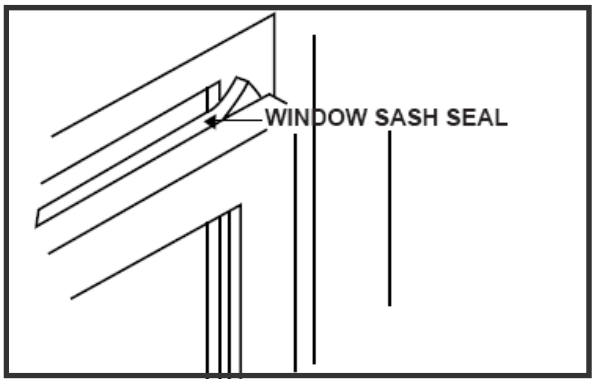

2. Attach the right angle safety lock as shown below. Do this for both sides.

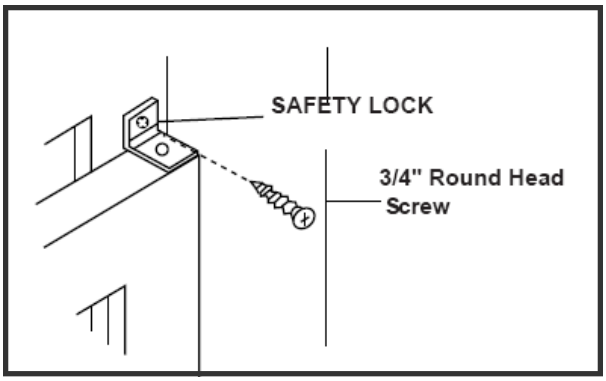

Installing the Chassis into the Cabinet

1. Team lift (two people) the air conditioner chassis and carefully slide it into the cabinet. Let the front of the air conditioner hang out approximately 6”.
2. **CAUTION:** DO NOT PUSH ON THE CONTROLS OR FINNED COILS.
3. Be sure the chassis is firmly seated in the back of the cabinet.
4. Insert all screws removed during window installation and reattach the front face plate, front panel, and the air filter. Use the REMOVE CHASSIS instructions and figures 1-6 for reference.

THRU-THE-WALL INSTALLATION

NOTE: Consult local building codes prior to installation and/or a qualified carpenter.

Select the Wall Location

This air conditioner has a slide-out chassis, so that it can be installed through an outside wall as specified below:

MAX WALL THICKNESS: 10.5”

IMPORTANT: The side louvers must never be blocked.

NOTE: All parts needed for Thru-The-Wall Installation are provided, except a wood frame, shims, and 10 wood screws (10-1” long minimum). Select a wall surface that:

1. Does not support major structural loads such as the frame construction at ends of windows, and under truss-bearing points, etc.
2. Does not have plumbing or wiring inside.
3. Is near existing electrical outlets, or where another outlet can or will be installed.
4. Does not have objects blocking the air vents which limits cooling.
5. Allows unblocked airflow from the rear and sides of the air conditioner.

Prepare the Wall

1. Prepare the wall in frame construction (including brick and stucco veneer). Working from inside the room, find the wall stud that is nearest the center of the installation area.
2. Cut a hole on each side of the center stud.
3. Measure between the inside edges of every other stud as shown below.

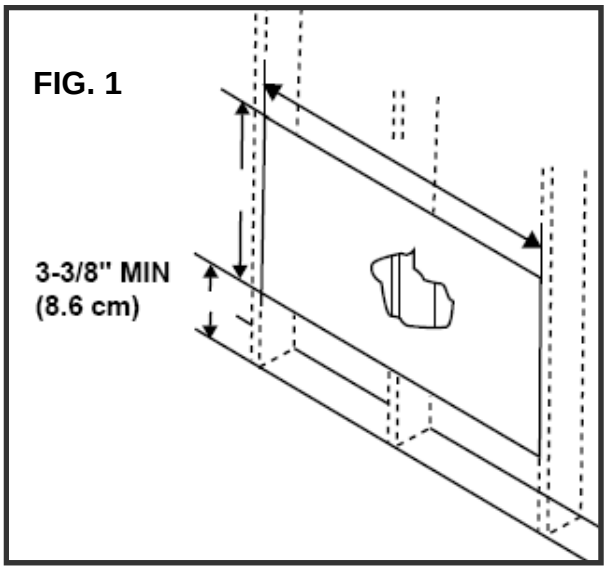

ASSEMBLY & INSTALLATION - THRU-THE-WALL (CONT.)

Carefully measure and cut an opening with the following dimensions depending on your model (FIG. 1 & 2).

WIDTH “X” = inside model plus twice the thickness of the framing material used.

HEIGHT “Y” = inside model height plus twice the thickness of framing material used.

Model	SG-WAC-12HCE
Inside Frame Height	16” plus twice the thickness of the wood used to build the frame.
Inside Frame Width	22 5/8” plus twice the thickness of the wood used to build the frame.

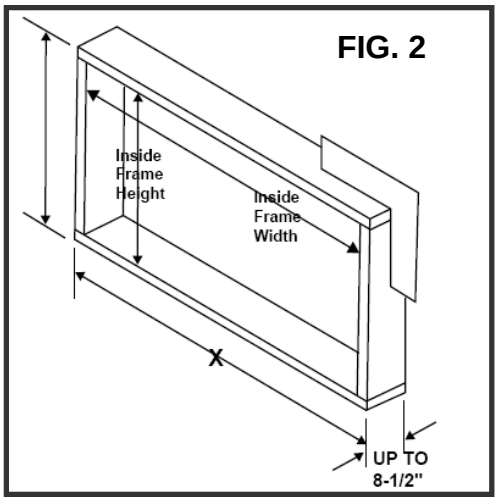

FIG. 2

4. Build a wooden frame with the INSIDE dimensions of your model listed above (Measure twice). The frame depth should be the same as the wall thickness. Fill in extra space from the opening to the studs with wood spacers as shown below.
5. Nail the spacers to the studs. They should be flush with the dry wall.

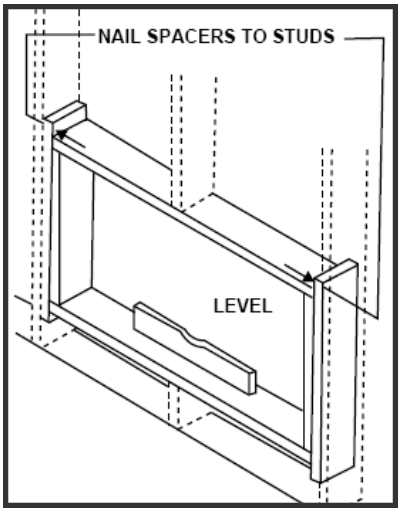

NOTE: If wall thickness is 8-1/2” or more, add aluminum flashing over the bottom of the frame opening to assure water is unable to enter the area between the inner and outer wall.

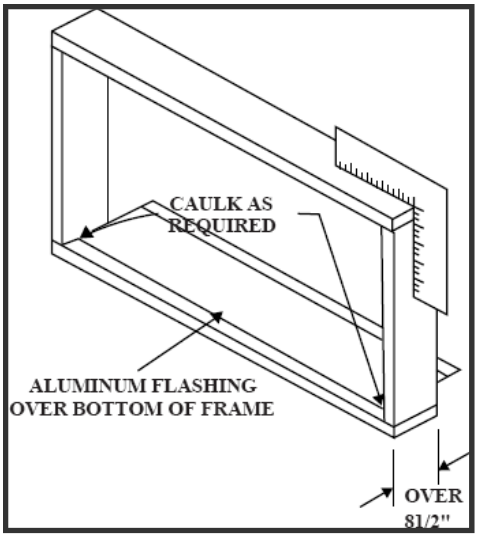

Prepare and Install the Cabinet

1. Slide the chassis from the cabinet. Refer back to the REMOVE CHASSIS instructions and FIG. 1-6 in the WINDOW MOUNTING SECTION.
2. Place the cabinet into the opening with the bottom rail resting firmly on the bottom board of the wood frame.
3. Position the cabinet so it is tilted properly for water removal as seen below.

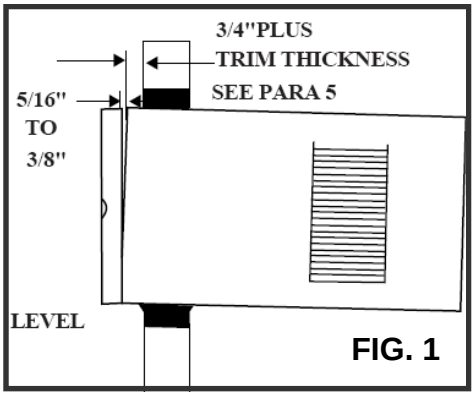

FIG. 1

4. Secure the bottom rail to the wood frame with two large 1” (2.5 cm) long wood screws as shown below.

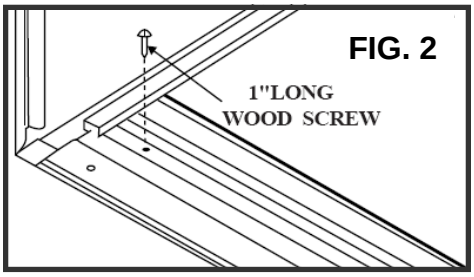

FIG. 2

Refer to the SUPPORT BRACKET ASSEMBLY in the WINDOW MOUNTING section to assemble the support brackets. A wooden strip nailed to the outside wall should be used in conjunction with the angled sill support brackets.

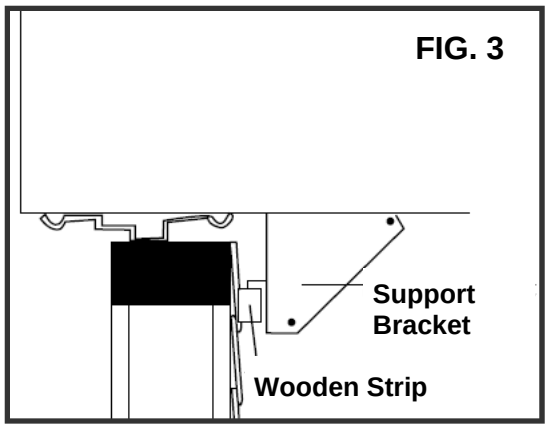

FIG. 3

5. Screw or nail the cabinet to the wooden frame using shims if the frame is oversized, to eliminate possible noise. Remember to maintain proper slope for water elimination.

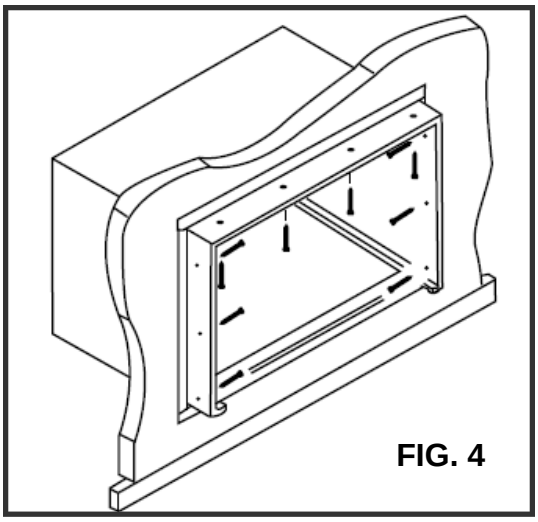

FIG. 4

6. Install the chassis into the cabinet by following the steps described in the WINDOW MOUNTING section.

OPTIONAL: Caulking and installation of the trim on the interior wall may be done if desired. Caulk the openings around the top and sides of the cabinet and all sides of the wood sleeve to the opening.

NOTE: See the WINDOW MOUNTING instructions for the bottom rail seal location.

MASONRY CONSTRUCTION

1. Cut or build a wall opening in the masonry wall similar to the frame construction (refer to the THRU-THE-WALL installation for a wall thickness greater than 8 1/2”)..
2. Secure the cabinet in place using masonry nails, or masonry anchor screws. Or, build a frame using the instructions found in the THRU-THE-WALL installation section.
3. Make sure the masonry above the cabinet is supported well. Use the existing holes in the cabinet or additional drilled holes to fasten the cabinet at various positions. Make sure that the side louvers are clear of any obstructions.
4. Install the exterior cabinet support brackets according to the SUPPORT BRACKET INSTALLATION instructions in the THRU-THE-WALL installation section. Caulk or flash with aluminum if needed. This will provide a tight seal around the top and sides of the cabinet.
5. For a more aesthetically pleasing installation, apply wood trim molding around the sides of the cabinet without obstructing the side louvers.

USING YOUR AIR CONDITIONER
Electronic Control Panel & Remote Control

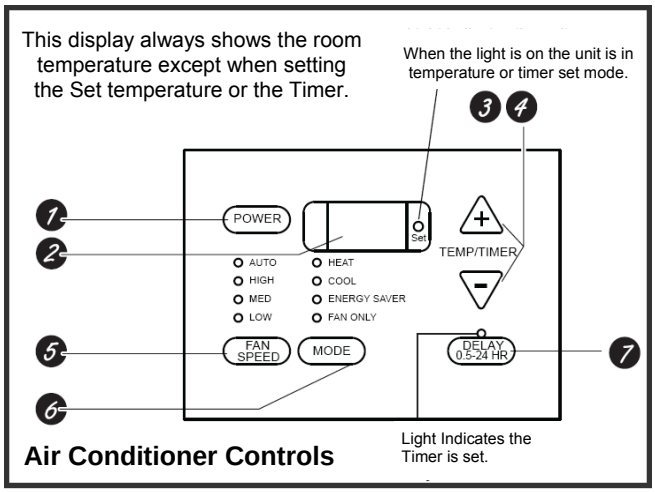

Air Conditioner Controls

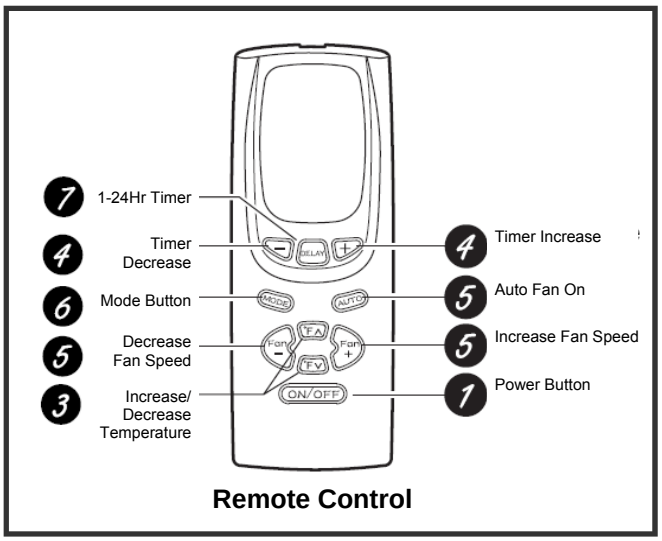

Remote Control

Normal Operating Sounds

- You may hear a pinging noise caused by water hitting the condenser, on rainy days, or when the humidity is high. This design feature helps remove moisture and improve efficiency.
- You may hear the thermostat click when the compressor cycles on and off.
- Water will collect in the base pan during rain or days of high humidity. The water may overflow and drip from the outside part of the unit.
- The fan may run even when the compressor is not on.

1. **Power Button:** Turns the air conditioner on and off
2. **Digital Display:** Displays the current room temperature or the amount of time left on the timer. Shows the Set Temp when setting the temperature. Shows the Timer Set when setting the timer. The once the timer and/or temperature are set, the display will change to show the current room temperature. To see the set temperature again, simply press either of the Temp/Delay ▲/▼ buttons.
3. **Temperature Set:** Use these buttons on the control panel and remote to increase or decrease the Set Temperature (the desired room temperature) in cooling or energy saver mode. The **SET** light will light up when setting the temperature
4. **Timer Set:** Use these buttons on the control panel and remote to set the Timer. Each press of the Timer (**DELAY**) buttons will increase or decrease the timer. For timer instructions see #7.
5. **Fan Speed & Auto Fan**: Use the fan speed buttons to change the fan speed. Choose between low, medium, high, and Auto. When using the remote control, press the **AUTO** button to turn auto mode on and off and the **FAN+** and **FAN–** buttons to select low, medium, or high fan speed.
6. **Mode Button:** Press the mode button to cycle through the various modes: Cooling, Energy Saver, Heat, and Fan only.
7. **Auto-on Timer:** When the air conditioner is off, it can be set to automatically turn on in 1-24 hours at the previous set mode and fan setting. To set the Auto-on Timer, press the **DELAY** button on the unit or remote control. Each touch of the ▲/▼ on the unit or the +/- buttons on the remote will change the timer setting in 1 hour intervals. The **SET** light will turn on while setting.

   Auto-off Timer: When the air conditioner is on, it can be set to automatically turn off in 1-24 hours. To se the Auto-off Timer, press the **DELAY** button on the unit or remote control. Each ouch of the ▲/▼ on the unit or the +/- buttons on the remote will change the timer setting in 1 hour intervals. The **SET** light will turn on while setting.

   - To see the remaining time, press the **DELAY** Button. To change the timer setting use the ▲/▼ on the unit or the +/- buttons on the remote.
   - To cancel the timer, press the **DELAY** button until the **SET** light turns off.

USING YOUR AIR CONDITIONER (Cont.)

- **Freezing Conditions:** This is a cooling only air conditioner. It is not designed for freezing outdoor conditions. It must not be used in freezing outdoor conditions.
- **Remote Control:** To ensure proper operation when using the remote control, aim the remote directly at the signal receiver on the air conditioner.
  - The remote control has a signal range up to 20 feet.
  - Make sure nothing is blocking the remote control signal from being received by the air conditioner.
  - Make sure the batteries are installed correctly and still have power.
- **Cooling Mode:** Use the COOL mode at Low, Medium, High, or Auto Fan speed when cooling is needed. Use the temperature ▲/▼ buttons to set the desired temperature between 64°F and 86°F.
  - Once the temperature is set, the compressor will cycle on and off to keep the room temperature at the set temperature level. The lower the set thermostat temperature, the cooler the room will become. The higher the set thermostat temperature, the warmer the room will become.
  - For Normal Cooling - Set the Mode to **Cool** and the Fan to **High** or **Med** with the termperature set in the middle.
  - For Maximum Cooling - Set the Mode to **Cool** and the Fan to **High** with a lower set temperature.
  - For Quieter & Nighttime Cooling - Set the Mode to **Cool** and the Fan to **Low** with the temperature set in the middle.

    NOTE: If the air conditioner is off and is then turned on while set to a Cool setting or if turned from a fan setting to a Cool setting, it may take approximately 3 minutes for the compressor to start and cooling to begin.
- **Heat Mode:** Use the Heat mode at Low, Med, High or Auto Fan Speed for heating. Use the temperature ▲/▼ buttons to set the desired temperature between 64°F and 86°F in 1°F increments.
  - For Normal Heating - Set the Mode to **Heat** and the Fan to **High** or **Med** with the termperature set in the middle.
  - For Maximum Heating - Set the Mode to **Heat** and the Fan to **High** with a lower set temperature.
  - For Quieter & Nighttime Heating - Set the Mode to **Heat** and the Fan to **Low** with the temperature set in the middle.
- **Energy Saver Mode** - Controls the Fan

  On - The fan will cycle on and off with the compressor. This results in winder variations of room temperature and humidity. Normally used with the room is unoccupied. NOTE: The fan my continue to run for a short time after the compressor cycles off.

  Off - The fan runs all the time in fan or cooling mode.
- **Fan Only Mode:** Use **Fan Only** mode at **Low**, **Med**, or **High** fan speed to provide air circulation and filtering without cooling. Since fan only setting do not provide cooling, a **Set** temperature cannot be entered. The room temperature will appear in the display.

  NOTE: **Auto Fan** Speed cannot be used in **Fan Only** mode.
- **Loss of Power Protection:** If power to the air conditioner is lost or interrupted, the air conditioner will automatically re-start in the setting last used prior to power loss. If the Timer was set to automatically turn the air conditioner off or on, it will resume countdown at the amount time left prior to power loss. You may need to set a new time if desired.
- **Air Direction:** Use the lever near on the front air vents to adjust the direction of the airflow. You can direct the airflow left or right only. The lever is located on the right side of the air vent.

USING YOUR AIR CONDITIONER (Cont.)

- **Freezing Conditions:** This is a cooling only air conditioner. It is not designed for freezing outdoor conditions. It must not be used in freezing outdoor conditions.
- **Remote Control:** To ensure proper operation when using the remote control, aim the remote directly at the signal receiver on the air conditioner.
  - The remote control has a signal range up to 20 feet.
  - Make sure nothing is blocking the remote control signal from being received by the air conditioner.
  - Make sure the batteries are installed correctly and still have power.
- **Cooling Mode:** Use the COOL mode at Low, Medium, High, or Auto Fan speed when cooling is needed. Use the temperature ▲/▼ buttons to set the desired temperature between 64°F and 86°F.
  - Once the temperature is set, the compressor will cycle on and off to keep the room temperature at the set temperature level. The lower the set thermostat temperature, the cooler the room will become. The higher the set thermostat temperature, the warmer the room will become.
  - For Normal Cooling - Set the Mode to **Cool** and the Fan to **High** or **Med** with the termperature set in the middle.
  - For Maximum Cooling - Set the Mode to **Cool** and the Fan to **High** with a lower set temperature.
  - For Quieter & Nighttime Cooling - Set the Mode to **Cool** and the Fan to **Low** with the temperature set in the middle.

    NOTE: If the air conditioner is off and is then turned on while set to a Cool setting or if turned from a fan setting to a Cool setting, it may take approximately 3 minutes for the compressor to start and cooling to begin.
- **Energy Saver Mode** - Controls the Fan

On - The fan will cycle on and off with the compressor. This results in winder variations of room temperature and humidity. Normally used with the room is unoccupied. NOTE: The fan my continue to run for a short time after the compressor cycles off.

Off - The fan runs all the time in fan or cooling mode.

- **Fan Only Mode:** Use **Fan Only** mode at **Low**, **Med**, or **High** fan speed to provide air circulation and filtering without cooling. Since fan only setting do not provide cooling, a **Set** temperature cannot be entered. The room temperature will appear in the display.

  NOTE: **Auto Fan** Speed cannot be used in **Fan Only** mode.
- **Loss of Power Protection:** If power to the air conditioner is lost or interrupted, the air conditioner will automatically re-start in the setting last used prior to power loss. If the Timer was set to automatically turn the air conditioner off or on, it will resume countdown at the amount time left prior to power loss. You may need to set a new time if desired.
- **Air Direction:** Use the lever on the front air vents to adjust the direction of the airflow. You can direct the airflow left, right, up or down. The lever is located on the right side of the air vent.

CARE AND CLEANING

Clean your air conditioner to keep it looking new and to minimize dust build up.

Air Filter Cleaning

The air filter should be checked at least once every month to see if it needs cleaning. Trapped particles and dust can build up in the filter and may decrease airflow as well as cause the cooling coils to accumulate frost. To clean the air filter:

1. Remove the filter by pulling down on the indents of the filter door on the front of the unit. (See FIG. 13)
2. Wash the filter using liquid dish soap and warm water. Rinse the filter thoroughly. Gently shake the filter to remove excess water.
3. Let the filter dry completely before placing it into the air conditioner.
4. If you do not wish to wash the filter, you may vacuum the filter to remove the dust and other particles.

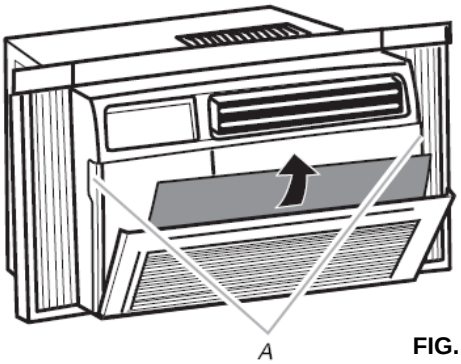

A. Indents

FIG. 13

Wear and Tear

To minimize wear and tear on the air conditioner, always wait at least 3 minutes before changing modes. This will help prevent the compressor from overheating and the circuit breaker from tripping.

Cabinet Cleaning

To clean the air conditioner cabinet:

- Unplug the air conditioner to prevent shock or a fire hazard. The cabinet and front panel of the air conditioner may be dusted with an oil-free cloth or washed with a cloth dampened in a solution of warm water and mild liquid soap. Rinse thoroughly with a damp cloth and wipe dry.
- Never use harsh cleaners, wax or polish on the cabinet front.
- Be sure to wring excess water from the cloth before wiping around the controls. Excess water in or around the controls may cause damage to the air conditioner.

Winter Storage

To store the air conditioner when it is not in use for an extended period of time, remove it carefully from the window according to the installation instructions and cover it with plastic or place it in the original box

.

TROUBLESHOOTING

PROBLEM	POSSIBLE CAUSES	SOLUTIONS
The Air Conditioner will not start	The air conditioner is unplugged	• Make sure the air conditioner is plug is pushed completely into the outlet
	The fuse is blown/circuit breaker is tripped.	• Check the house fuse/circuit breaker box and replace the fuse or reset the breaker.
	Power Failure	• The unit will automatically re-start when power is restored. • There is a protective time delay (approx. 3 minutes) to prevent tripping of the compressor overload. For this reason, the unit may not start normal cooling for 3 minutes after it is turned back on.
	The current interrupter device is tripped.	• Press the RESET button located on the power cord plug. • If the RESET button will not stay engaged, discontinue use of the air conditioner and contact a qualified service technician.
The Air Conditioner does not cool as it should	Airflow is restricted	• Make sure there are no curtains, blinds, or furniture blocking the front of the air conditioner
	The temperature control may not be set correctly.	• Lower the set thermostat tempera-ture
	The air filter is dirty	• Clean the filter. See the Cleaning and Care Section of the manual.
	The room may be too warm	• Please allow time for the room to cool down after turning on the air conditioner.
	Cold air is escaping	• Check for open furnace registers and cold air returns
	The Cooling Coils are frozen	• See “Air Conditioner Freezing Up” below.
The Air Conditioner is freezing up	Ice blocks the air flow and stops the air conditioner from cooling the room	• Set the MODE dial to HIGH FAN or HIGH COOL and set the ther-mostat to a higher temperature
The Remote Control is not working	The batteries are inserted incorrectly The batteries may be dead	• Check the position of the batteries. • Replace the batteries

TROUBLESHOOTING (CONT.)

PROBLEM	POSSIBLE CAUSES	SOLUTIONS
Water is dripping outside	Hot and Humid weather.	• This is normal
Water is dripping inside the room	The air conditioner is not correctly tilted outside.	• For proper water drainage, make sure the air conditioner is slightly tilted downward from the front of the unit to the rear.
Water collects in the base pan	Moisture removed from the air is draining into the base pan.	• This is normal for a short period in areas with low humidity and normal for a longer period in areas with high humidity.
Digital Display reads “F1”, “F2”, or “FJ”	A sensor has failed	• Contact customer service

WARRANTY

One Year Limited Warranty

Soleus International, Inc. warrants the accompanying Soleus Air Powered by Gree Air Conditioner to be free of defects in material and workmanship for the applications specified in its operation instruction for a period of ONE (1) year from the date of original retail purchase in the United States.

If the unit exhibits a defect in normal use, Soleus International will, at its option, either repair or replace it, free of charge within a reasonable time after the unit is returned during the warranty period.

As a condition to any warranty service obligation, the consumer must present this Warranty Certificate along with a copy of the original purchase invoice.

THIS WARRANTY DOES NOT COVER:

- Damage, accidental or otherwise, to the unit while in the possession of a consumer not caused by a defect in material or workmanship.
- Damage caused by consumer misuse, tampering, or failure to follow the care and special handling provisions in the instructions.
- Damage to the finish of the case, or other appearance parts caused by wear.
- Damage caused by repairs or alterations of the unit by anyone other than those authorized by Soleus International Inc.
- Freight and Insurance cost for the warranty service.
- Filter and Accessories

ALL WARRANTIES, INCLUDING ANY IMPLIED WARRANTY OF MERCHANT ABILITY ARE LIMITED TO ONE-YEAR DURATION OF THIS EXPRESS LIMITED WARRANTY**. SOLEUS INTERNATIONAL INC.** DISCLAIMS ANY LIABILITY FOR CONSEQUENTIAL OR INCIDENTAL DAMAGES AND IN NO EVENT SHALL SOLEUS INTERNATIONAL INC'S LIABILITY EXCEED THE RETAIL VALUE OF THE UNIT FOR BREACH OF ANY WRITTEN OR IMPLIED WARRANTY WITH RESPECT TO THIS UNIT.

This warranty covers only new products purchased from our authorized dealers or retailers. It does not cover used, salvaged, or refurbished products.

As some states do not allow the limitation or exclusion of incidental or consequential damages, or do not allow limitation on implied warranties, the above limitations and exclusions may not apply to you. This warranty gives you specific legal rights, and you may also have other rights that vary from state to state.

For Technical Support and Warranty Service
Please Call (888) 876-5387

Or Write To:
Soleus International, Inc.
20035 E. Walnut Dr. N.
City of Industry, CA 91789
www.soleusair.com
www.soleusgreen.com