Jet Convection Oven

OWNER'S MANUAL

Model JO287SP
120V., 60Hz., 1500 Watts

EURO-PRO Operating LLC
Boston, MA, 02465
1(800) 798-7398
www.euro-pro.com

COPYRIGHT© EURO-PRO OPERATING LLC 2008

IMPORTANT SAFETY INSTRUCTIONS

When using your ***Jet Convection Oven***, basic safety precautions should always be observed, including the following:

1. Read all instructions before using your ***Jet Convection Oven***.
2. Do not touch hot surfaces. Always use handles or knobs.
3. Close supervision is necessary when any appliance is used by or near children.
4. To protect against electric shock, do not immerse cord, plug or any parts of the oven in water or any other liquids.
5. Do not let cord hang over edge of table or counter, or touch hot surfaces.
6. Do not operate appliance with damaged cord or plug or after the appliance malfunctions or has been damage in any manner. Return appliance to the nearest EURO-PRO Operating LLC for examination, repair or adjustment.
7. The use of accessory attachments not recommended by the appliance manufacturer may cause hazard or injury.
8. Do not place on or near a hot gas or electric burner.
9. When operating the oven, keep at least four inches of free space on all sides of the oven to allow for adequate air circulation.
10. Unplug from outlet when not in use and before cleaning. Allow to cool before putting on or taking off parts, and before cleaning.
11. To disconnect, turn the time control button to OFF, then remove the plug. Always hold the plug, and never pull the cord.
12. Extreme caution must be used when moving a drip pan containing hot oil or other hot liquids.
13. Do not cover crumb tray or any part of the oven with metal foil. This may cause the oven to overheat.
14. Use extreme caution when removing the tray, racks or disposing of hot grease or other hot liquids.
15. Do not clean the inside of the oven with metal scouring pads. Pieces can break off the pad and touch electrical parts, creating a risk of electric shock.
16. Oversized foods or metal utensils must not be inserted in a toaster oven as they may create a fire or risk of electric shock.
17. A fire may occur if the oven is covered or touching flammable material, including curtains, draperies, walls and the like when in operation. Do not place any items on the oven during operation.
18. Extreme caution should be exercised when using cooking or baking containers constructed of anything other than metal or ovenproof glass.
19. Be sure that nothing touches the top or bottom elements of the oven.
20. Do not place any of the following materials in the oven: cardboard, plastic, paper, or anything similar.
21. Do not store any materials other than manufacturer's recommended accessories in this oven when not in use.
22. This appliance is OFF when the Timer Control button is in the "OFF" position.
23. Always wear protective, insulated oven gloves when inserting or removing items from the hot oven.
24. This appliance has a tempered, safety glass door. The glass is stronger than ordinary glass and more resistant to breakage. Tempered glass can still break around the edges. Avoid scratching door surface or nicking edges.
25. Do not use outdoors.
26. Do not use appliance for other than intended use.

This unit has a short power supply cord to Reduce the risk resulting from becoming entangled in or tripping over a long cord. An extension cord may be used if you are careful in its use:

1. The electrical rating of the extension cord should be at least as great as the electrical rating of the appliance.
2. An extension cord with the power cord must be arranged so that it will not drape over the countertop or tabletop where they can be pulled on by children or tripped over accidentally.

SAVE THESE INSTRUCTIONS

For Household Use Only

WARNING: To reduce the risk of electric shock, this appliance has a polarized plug (one blade is wider than the other). This plug will fit in a polarized outlet only one way. If the plug does not fit fully in the outlet, reverse the plug. If it still does not fit, contact a qualified electrician to install the proper outlet. Do not modify the plug in any way.

GETTING TO KNOW YOUR JET CONVECTION OVEN

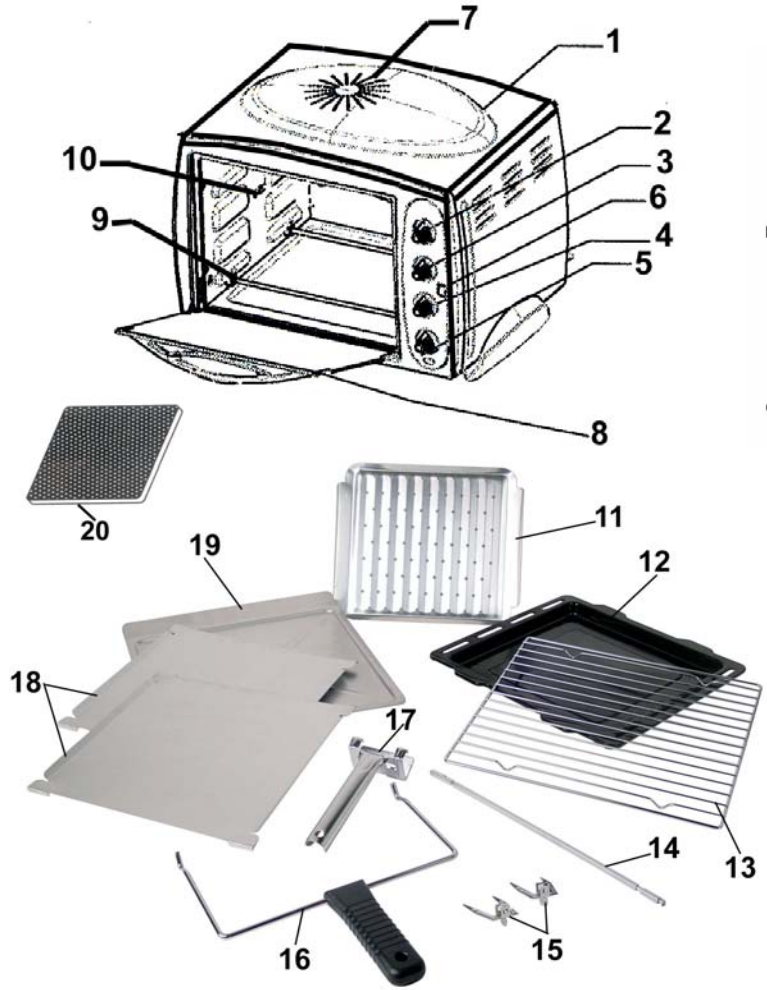

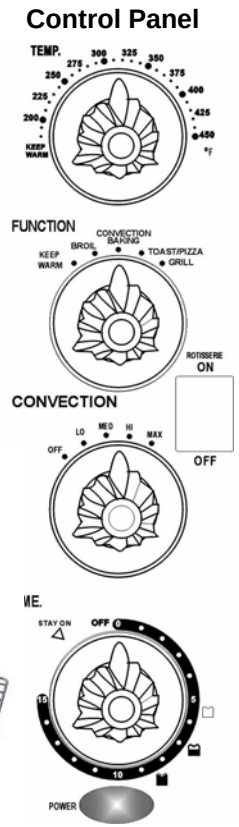

1. Housing
2. Temperature Control Knob
3. Function Control Knob
4. Convection Control Knob
5. Time Control/On-Off Knob
6. Rotisserie On/Off Switch
7. Convection Fan
8. Glass Door
9. Lower Heating Element
10. Rotisserie Skewer Support
11. Broiler Rack
12. Broiler/Drip Pan
13. Wire Rack (x2)
14. Rotisserie Skewer
15. Skewer Clamps (x2)
16. Rotisserie Handle
17. Rack Handle
18. Cookie Sheets (x2)
19. Crumb Tray
20. Pizza Stone

Technical Specifications

Voltage:	120V., 60Hz.
Power:	1500 Watts

Read all the sections of this booklet and follow all the instructions carefully.

Before Using Your Jet Convection Oven

1. Read all of the instructions included in this manual.
2. Make sure that the oven is unplugged and the Time Control is in the "OFF" position.
3. Wash all the accessories in hot, soapy water or in the dishwasher.
4. Thoroughly dry all accessories and re-assemble in oven. Plug oven into outlet and you are ready to use your new Toaster Oven with Jet Convection.
5. After re-assembling your oven, we recommend that you run it at the highest temperature (450° F.) on the Toast Function for approximately 15 minutes to eliminate any packing residue that may remain after shipping. This will also remove all traces of odor initially present.

Please Note: Initial start-up operation may result in minimal smell and smoke (about 15 minutes). This is normal and harmless. It is due to burning of the protective substance applied to the heating elements in the factory.

Convection Cooking

Convection cooking combines hot air movement by means of a fan with the Convection/Baking feature. Convection cooking provides faster cooking in many cases than regular radiant type toaster ovens. The fan gently sends air to every area of the food, quickly browning, crisping and sealing in moisture and flavor. It produces more even temperature all around the food by air movement, so that food cooks/bakes evenly versus the normal ovens hot and cold spots. The convection feature allows cooking/baking at lower temperatures, which saves energy and helps keep the kitchen cooler. With the Jet Convection Oven you will see about a 25 to 30% decrease in cooking temperature and a 20 to 25% decrease in cooking time when compared to a conventional oven. Convection cooking is very consistent and even. The oven heats quickly, so pre-heating is not necessary or desirable. The fan circulates the hot air around the food making baked goods rise quickly and evenly.

Using Your Jet Convection Oven

Please familiarize yourself with the following oven functions and accessories prior to first use:

- **Temperature Control** - Choose the desired temperature from **180°** (Keep Warm) to **450° F** for baking, broiling, toasting or grilling.
- **Function Control** - This oven is equipped with five positions for a variety of cooking needs:
  - **Convection Baking** - Cakes, pies, cookies, poultry, beef, pork, etc.
  - **Toast/Pizza**- Bread, muffins, frozen waffles, pizza, etc.
  - **Grill** - For grilling fish, steak, sandwiches, bacon & eggs, etc.
  - **Broil** - For broiling fish, steak, poultry, pork chops, etc.
  - **Keep Warm** - To keep cooked food warm for up to **30 minutes**.
- **Rotisserie On/Off Switch** – Turns the rotisserie "On". Can be used with any of the above functions.
- **Time Control** - When you turn the control to the left, (counter-clockwise), the oven will "STAY ON" until it is manually shut "OFF". To activate the timer segment of the control, turn to the right (clockwise) to toast or use as a timer. This function also has a bell that rings at the end of the programmed time.
- **Convection Control** – You can choose from "**LO**" to "**MAX**" settings. Can **ONLY** be used with the Convection Baking function.

Using Your Jet Convection Oven

- **Power "On" Light** - It is illuminated whenever the oven is turned on.
- **Broiler/Drip Pan** - For use in broiling and roasting meat, poultry, fish and various other foods. Also to be used when using the Rotisserie to catch the drippings.
- **Tray Handle** - Allows you to pick up the wire rack, and broiler pan when they are hot.

WARNING: TO AVOID RISK OF INJURY OR BURNS, DO NOT TOUCH HOT SURFACES WHEN OVEN IS IN USE. ALWAYS USE OVEN MITTS.

Caution: Always use extreme care when removing broiler pan, wire rack or any hot container from a hot oven. Always use the rack handle, or an oven mitt when removing hot items from the oven.

Broiling

The top heating elements cycle on and off to maintain maximum temperature in the oven. For best results, the oven should be preheated for 20 minutes at 450° before adding the food to be broiled.

Operation

- Set Temperature Control to **450**°.
- Turn Function Control to **Broil**.
- Preheat the oven.
- Place the food on the Broil Rack which is on top of the Broil/Drip Pan.
- Place the Broil/Drip Pan on the Top Rack Support Guide or Middle Rack Support Guide depending on the thickness of the food that you are cooking.
- Food should be placed as close as possible to the Top Heating Element without touching it.
- Set temperature control to the appropriate temperature.
- Brush food with sauces or oil, as desired.
- Turn Time Control to position **"Stay On**".
- It is advisable to leave the door **slightly ajar**.
- When broiling is complete, turn the Time Control to **"OFF"**.

Broiling Guide

Cooking results may vary, adjust these times to your individual requirements. Also, check often during broiling to avoid overcooking.

MEAT	OVEN TEMP	COOKING TIME
RIB STEAK	400	25-30 min.
T-BONE STEAK	400	25-30 min.
HAMBURGER	400	25-28 min.
PORK CHOPS	400	40-45 min.
LAMB CHOPS	400	30-40 min.
CHICKEN LEGS	400	30-35 min.
FISH FILETS	350	20-25 min.
SALMON STEAKS	350	20-25 min.

Note: All broiling times are based on meats at refrigerator temperature. Frozen meats may take considerably longer. Therefore, use of a meat thermometer is highly recommended.

Convection Baking

Convection baking is very consistent and even. The oven heats quickly, so preheating is not necessary or desirable. The fan circulates the hot air around the food making baked goods rise quickly and evenly. With this oven, you have the option of four (4) convection settings. We recommend using the "LO" to MED" settings for small roasts or baking cookies/cakes and the "HI" to "MAX" settings for larger roasts or for rotisserie cooking.
Bake your favorite cookies, cakes, pies, brownies, etc. The bakeware that will fit in your oven are up to 10 inches in width. We do not recommend the use of oven roasting bags or glass containers in the oven. **Never** use plastic, cardboard, paper or anything similar in the oven.

Operation

- Place the wire rack in the **lowest or middle** Rack Support Guide depending on the height of the pan or according to the recipe.
- Place pan with item(s) to be baked on the wire rack.
- Turn the Function Control to **Convection Baking**.
- Turn the Time Control to position **"Stay On"**.
- You have the option of using the convection with this function. If you want to use the convection fan, turn the Convection Control Knob to "LO", "MED", "HI" or "MAX" setting. If you do not want the convection fan to work, set the Convection Control Knob to the "Off" position.
- When baking is complete, turn the Time Control to **"OFF"** as well as the Convention Control Knob to the "Off" position if it was being used.

Positioning of the Wire Racks

Cookies - Use bottom and middle Support Guides.
Layer Cakes - Use bottom Support Guide only (bake one at a time).
Pies - Use bottom Support Guide.

Baking on 2 Racks

Two racks of cookies can be baked at the same time, however it is necessary to rotate them (i.e. move the top to the bottom and the bottom to the top) halfway to through the baking time if you are **NOT** using the convection fan. If you are using the convection fan feature, then you do **NOT** need to rotate.

Baking Cookies

For baking cookies, we suggest adjusting baking temperature and using a cookie sheet placed on the wire rack. Also, using parchment paper on a cookie sheet might prove helpful when baking certain types of cookies.

1. Use parchment paper on cookie sheet so cookies will not stick.
2. Cookie sheets, baking times and temperatures may differ from those necessary when using other baking materials.

Note: Convection air is superheated and it circulates around the food, so it cooks food up to 25% faster. When baking your favorite recipes or packaged goods, follow recipe instructions remembering not to preheat. Check the baked goods a few minutes before the shortest recommended baking time.

Baking Guide

Follow the package or recipe instructions for baking times and temperature.

Rotisserie Cooking

We recommend that you do not cook a roast larger than 4-5 lbs. on the Rotisserie Skewer. Chicken should be bound in string to prevent the chicken legs or wings from unraveling during roasting and so that rotisserie assembly will rotate smoothly. For best results we recommend that you preheat the oven for 15 minutes on 450°.

Operation

- Set temperature control to 450°F.
- Turn Function Control Knob to Convection Baking.
- Turn Convection Control Knob to desired fan speed (LO - MED – HI – MAX).
- Insert the meat or poultry that you are going to cook onto the rotisserie skewer making sure that the meat or poultry is secured tightly onto the skewer with the skewer clamps and thumbscrews. Make sure that the meat or poultry is centered onto the skewer.
- Insert the pointed end of the Rotisserie Skewer into the drive socket located on the right hand side of the oven wall. Make sure that the square end of the Rotisserie Skewer rests on the Rotisserie Skewer Support located on the left hand side of the oven wall.
- Slide the Broil/Drip Pan onto the lowest position to catch the food drippings.
- Turn the Time Control Knob to the “Stay On” position.
- Push the Rotisserie On/Off Switch to the “On” position.
- When the cooking is completed, turn the Time Control Knob to the “Off” position.
- Remove the Rotisserie Skewer from the oven by placing the hooks of the Rotisserie Handle under the grooves on either side of the Rotisserie Skewer. Remove the left side of the Rotisserie Skewer first by lifting up and out. Then pull the Rotisserie Skewer out of the drive socket and carefully remove the roast from the oven.
- Take the meat or poultry off the Rotisserie Skewer and place on a cutting board or platter.

Rotisserie Guide

Cooking times may vary depending on whether you are using the convection fan feature and on what fan speed setting you have it on. Adjust these times to your individual requirements.

MEAT	OVEN TEMP	TIME PER LB.
BEEF ROAST	325	30-35 min.
PORK ROAST	325	45-50 min.
HAM	325	45-50 min.
CHICKEN	350	25-30 min.
TURKEY	350	25-30 min.

Note: **All roasting times are based on meats at refrigerator temperature. Frozen meats may take considerably longer. Therefore, use of a meat thermometer is highly recommended.**

Roasting In Your Oven

Roast your favorite cut of meat to perfection. The oven can cook up to an 8-lb. chicken or turkey and up to a 6-lb. roast. A guide has been provided to assist you with roasting times. However, we suggest that you periodically check the cooking progress with a meat thermometer. For best results we recommend that you preheat the oven for 15 minutes on 450°. We do not recommend the use of oven roasting bags or glass containers in the oven. **Never** use plastic cardboard, paper or anything similar in the oven.

Operation

- Place the wire rack in the oven at the lowest position.
- Place food to be cooked in any roasting pan. If you wish to use the Broil/Drip Pan, then you do not need to insert the wire rack because the Broil/Drip pan supports itself on the oven support guides.
- Set the Temperature Control Knob to the desired temperature.
- Turn the Function Control Knob to Convection Baking.
- You have the option of roasting with or without the Convection Fan. If you wish to use the Convection Fan, then turn the Convection Control Knob to the desired fan speed setting.
- Turn the Time Control Knob to the “STAY ON” position.
- To check or remove roast, use the rack handle provided to help you slide the roast in and out.
- When cooking is complete, turn the Time Control Knob and the Convection Control Knob to the “OFF” position.

Roasting Guide

Cooking times may vary depending on whether you are using the convection fan feature and on what fan speed setting you have it on. Adjust these times to your individual requirements.

MEAT	OVEN TEMP	TIME PER LB.
BEEF ROAST	325	25-30 min.
PORK ROAST	325	40-45 min.
HAM	325	35-40 min.
CHICKEN	350	20-25 min.
TURKEY	350	20-25 min.

Note: **All roasting times are based on meats at refrigerator temperature. Frozen meats may take considerably longer. Therefore, use of a meat thermometer is highly recommended.**

Toasting

Large capacity oven allows for toasting 4 to 6 slices of bread, 6 muffins, frozen waffles or frozen pancakes. When toasting only 1 or 2 items, place food on the wire rack in the center of the oven.

Operation

- Set the Temperature Control Knob to 450°.
- Turn the Function Control Knob to Toast/Pizza.
- Place food to be toasted on the Wire Rack.
- Ensure Crumb Tray is in place.
- Turn the Time Control Knob to desired darkness. (Light to Dark).
- Bell will signal the end of the Toast cycle.

Note: Wire Rack should be positioned in the middle of the oven with the indentations pointing down.

Using the Pizza Stone

Your Pizza Stone heats evenly, absorbs moisture and cooks without fats, making each dish a success.

Operation

- Preheat oven for 15 minutes on 450°.
- Turn the Function Control Knob to Toast/Pizza.
- Set Timer Control Knob to "ON" position.
- Then lower temperature according to baking instructions.
- Place pizza stone on the Wire Rack and begin baking.
- Do not use oil or other fats on the pizza stone. You can add a light dusting of flour so that dough will not stick to pizza stone.
- Pizza stone baking times and temperature may differ from those necessary when using other baking pans.
- When pizza is ready, turn the Time Control Knob to "OFF" position.
- For cleaning, residues can be eliminated from pizza stone using a spatula or a knife. For deeper cleaning, heat pizza stone in the oven, brush it with a scouring pad (do not use detergents) and rinse well with hot water.
- With use, the pizza stone will darken but its characteristics will remain unchanged.

Preparation & Cooking Time

Frozen Pizzas -	Cook for 5-8 minutes or as indicated on the package. It is advisable to remove the pizza from the freezer 10 minutes before placing in the oven. Place pizza on pizza stone to bake.
Pizza Mix -	Follow the instructions on the box. Place pizza on pizza stone to bake. Cook for 18-25 minutes.
Pizza From Scratch -	Follow the recipe instructions. Place pizza on pizza stone to bake.

Grill

Please note that the Grill function uses only the bottom heating elements. For best results, it is recommended that you preheat the oven for 15 minutes on 450°.

Operation

- Set Temperature Control to 450°.
- Turn Function Control to Grill.
- Preheat the oven.
- Place the Wire Rack on the lowest rack support guide.
- Place the food on the Broiler Rack and place the Broiler Rack on a Cookie Sheet to catch all the drippings.
- Food should be placed as close as possible to the Lower Heating Element without touching it.
- Set temperature control to the appropriate temperature.
- Brush food with sauces or oil, as desired.
- Turn Time Control to position 'Stay On'.
- It is advisable to leave the door slightly ajar.
- Turn food over midway through the prescribed cooking time.
- When grilling is complete, turn the Time Control to 'OFF'.

Keep Warm

Keep cooked food warm for up to 30 minutes. Longer periods of time are not recommended as food will become dry or will spoil.

Operation

- Set the Temperature Control to Keep Warm.
- Turn the Function Control to Keep Warm.
- Turn the Time Control to "Stay On" position.
- Turn the Time Control to "Off" position when finished with Keep Warm.

CAUTION: When sliding trays out of oven, always support the rack. Do not let go until you are sure the rack is securely supported by the tray handle.

Care & Cleaning

Warning: Be sure to unplug the oven and allow it to cool before cleaning.

Your oven features a continuous clean coating that automatically cleans itself during normal operation. Any spattering that occurs while cooking and comes into contact with the continuous coating is oxidized while the oven is in operation. If desired, wipe the walls with a damp sponge, cloth or nylon scouring pad and mild detergent. **DO NOT USE STEEL WOOL SCOURING PADS, ABRASIVE CLEANERS OR SCRAPE THE WALLS WITH A METAL UTENSIL, AS ALL OF THESE METHODS MAY DAMAGE THE CONTINUOUS CLEAN COATING.**

All accessories should be washed in hot soapy water or can be cleaned in a dishwasher. The door can be wiped with a damp sponge and wiped dry with a paper or cloth towel. Clean the outside with a damp sponge. **DO NOT USE AN ABRASIVE CLEANER AS IT MAY DAMAGE THE EXTERIOR FINISH.**

DO NOT USE AN ABRASIVE CLEANER OR STEEL WOOL SCOURING PAD ON THE BROILER PAN AS IT MAY DAMAGE THE PORCELAIN ENAMEL FINISH.

LET ALL PARTS AND SURFACES DRY THOROUGHLY PRIOR TO PLUGGING OVEN IN AND USING.

Model JO287SP

EURO-PRO

ONE (1) YEAR LIMITED WARRANTY

EURO-PRO Operating LLC warrants this product to be free from defects in material and workmanship for a period of one (1) year from the date of purchase when utilized for normal household use.

If your appliance fails to operate properly while in use under normal household conditions within the warranty period, return the complete appliance and accessories, freight prepaid. For Customer Service support, call 1 (800) 798-7398 or visit our website www.euro-pro.com. If the appliance is found by ***EURO-PRO Operating LLC*** to be defective in material or workmanship, ***EURO-PRO Operating LLC*** will repair or replace it free of charge. Proof of purchase date and $18.95 to cover the cost of return shipping and handling must be included.*

The liability of ***EURO-PRO Operating LLC*** is limited solely to the cost of the repair or replacement of the unit at our option. This warranty does not cover normal wear of parts and does not apply to any unit that has been tampered with or used for commercial purposes. This limited warranty does not cover damage caused by misuse, abuse, negligent handling or damage due to faulty packaging or mishandling in transit.

This warranty is extended to the original purchaser of the unit and excludes all other legal and/or conventional warranties. The responsibility of ***EURO-PRO Operating LLC*** if any, is limited to the specific obligations expressly assumed by it under the terms of the limited warranty. **In no event** is ***EURO-PRO Operating LLC*** liable for incidental or consequential damages of any nature whatsoever. Some states do not permit the exclusion or limitation of incidental or consequential damages, so the above may not apply to you.

This warranty gives you specific legal rights, and you may also have other rights which vary from state to state.

***IMPORTANT: Carefully pack item to avoid damage in shipping. Be sure to include proof of purchase date and to attach tag to item before packing with your name, complete address and phone number with a note giving purchase information, model number and what you believe is the problem with item. We recommend you insure the package (as damage in shipping is not covered by your warranty). Mark the outside of your package "ATTENTION CUSTOMER SERVICE". We are constantly trying to improve our products, therefore the specifications contained herein are subject to change without notice.**

Printed in China