LS-1000 STAIRCLIMBERS

GK24-00001-XXXX

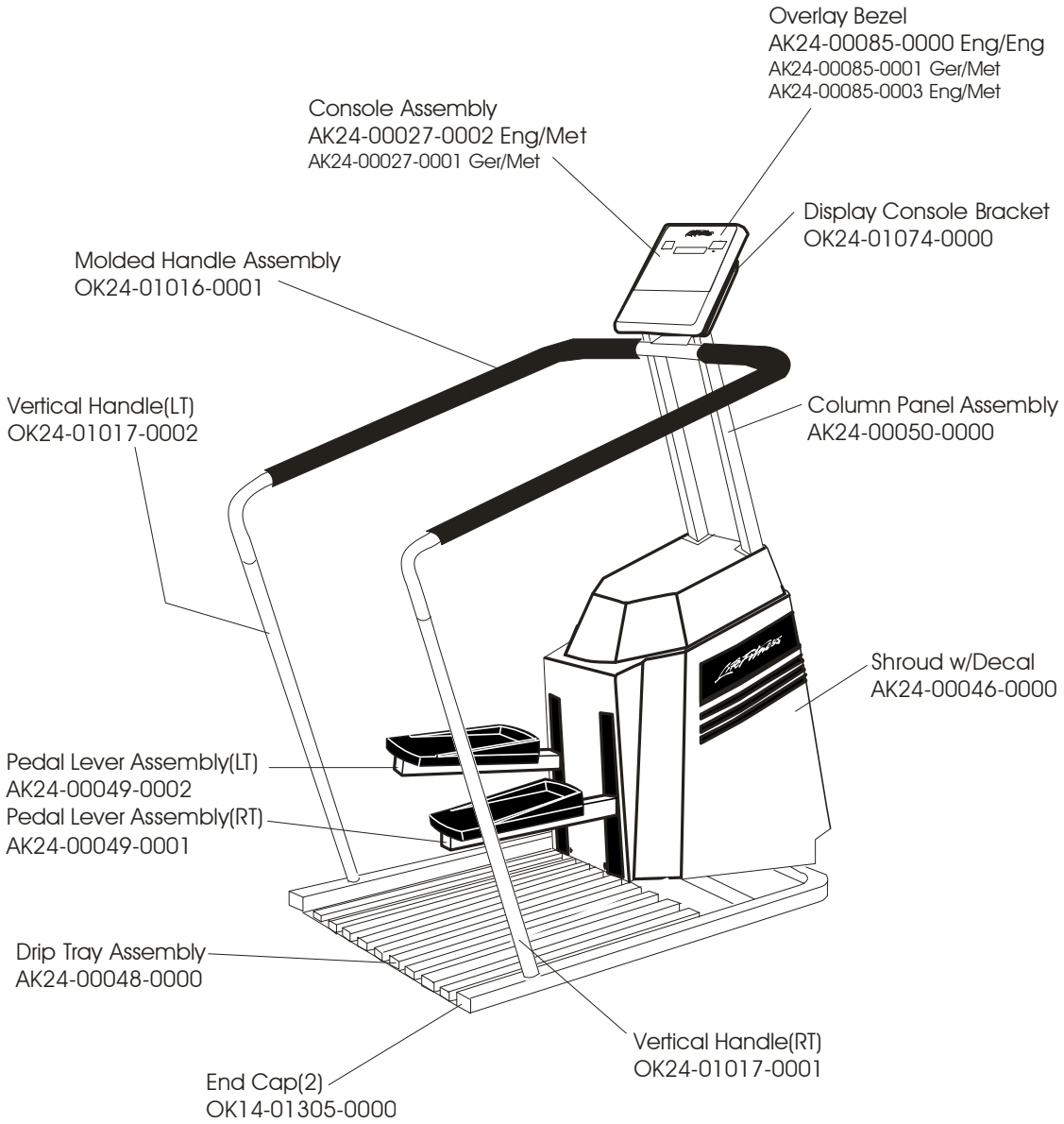

rev. 07/05/05

LS-1000 STAIRCLIMBERS

GK24-00001-XXXX

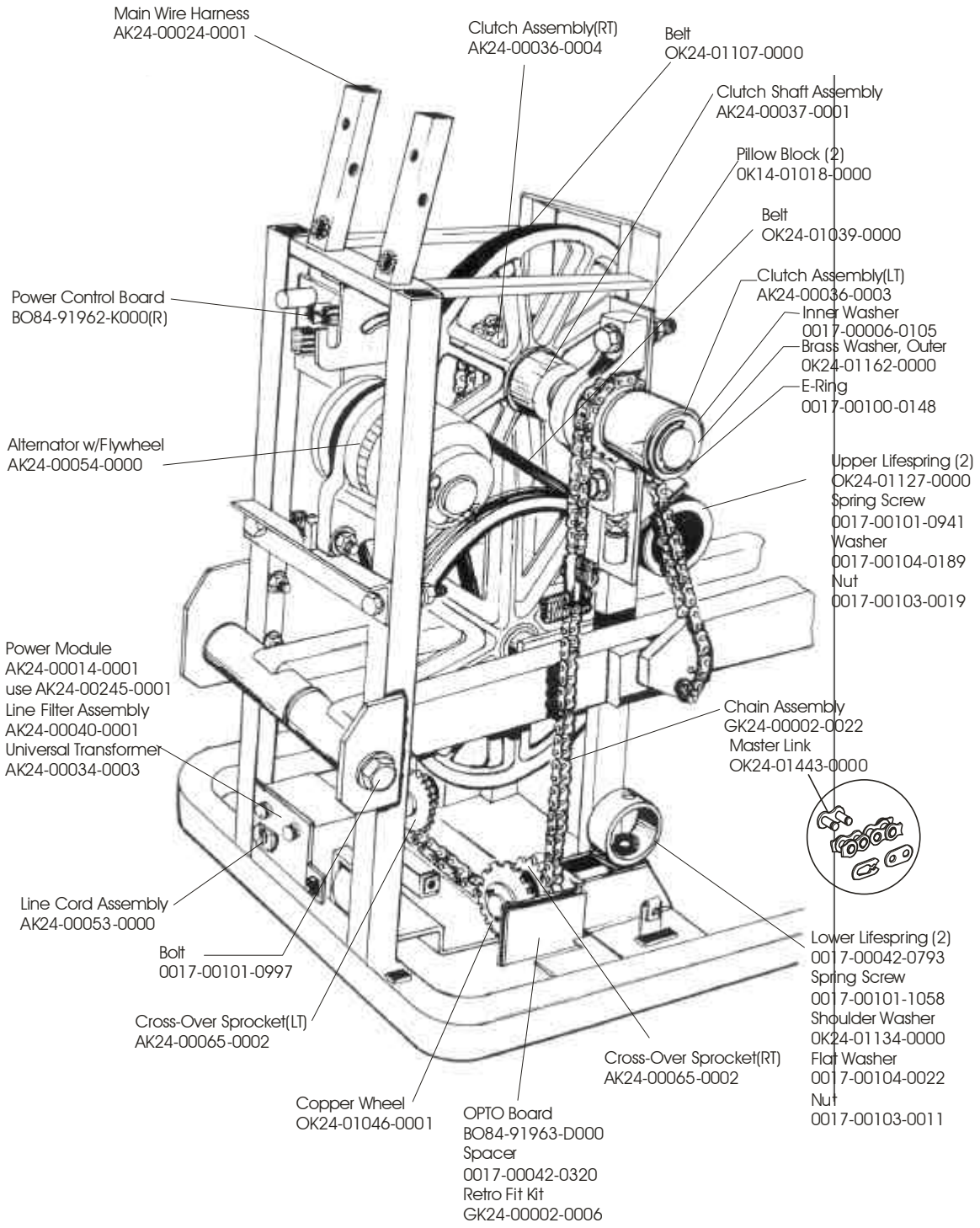

rev. 07/05/05