Serial Number

Please use this number in registering your warranty and any correspondence with the factory.

SPIRIT™ 700 Series
LP Gas Barbecue
Owner's Manual

WARNING: Follow all leak check procedures carefully in this manual prior to barbecue operation. Do this even if barbecue was dealer assembled.

NOTICE TO INSTALLER: These instructions must be left with the owner and the owner should keep them for future use.

THIS GAS APPLIANCE IS DESIGNED FOR OUTDOOR USE ONLY.

WARNING: Do not try to light this appliance without reading "Lighting" instructions section of this manual.

FOR YOUR SAFETY

1. **Do not store or use gasoline or other flammable vapors and liquids in the vicinity of this or any other appliance.**
2. **An LP tank not connected for use shall not be stored in the vicinity of this or any other appliance.**

FOR YOUR SAFETY

If you smell gas:

1. **Shut off gas to the appliance.**
2. **Extinguish any open flame.**
3. **Open lid.**
4. **If odor continues, immediately call your gas supplier or your fire department.**

98583 10/97

⚠DANGER

Failure to follow the Dangers, Warnings and Cautions contained in this Owner's Manual may result in serious bodily injury or death, or in a fire or an explosion causing damage to property.

⚠WARNINGS

- ⚠ **Do not store a spare or disconnected LP tank under or near this barbecue.**
- ⚠ **Improper assembly may be dangerous. Please carefully follow the assembly instructions in this manual.**
- ⚠ **After a period of storage, and/or nonuse, the Weber Gas Barbecue should be checked for gas leaks and burner obstructions before using. See instructions in this manual for correct procedures.**
- ⚠ **Do not operate the Weber Gas Barbecue if there is a gas leak present.**
- ⚠ **Do not use a flame to check for gas leaks.**
- ⚠ **Combustible materials should never be within 24 inches of the top, bottom, back or sides of your Weber Gas Barbecue.**
- ⚠ **Do not put a barbecue cover or anything flammable on or in the storage area under the barbecue.**
- ⚠ **Your Weber Gas Barbecue should never be used by children.**
- ⚠ **You should exercise reasonable care when operating your Weber Gas Barbecue. It will be hot during cooking or cleaning, and should never be left unattended.**
- ⚠ **Should the burners go out during operation, turn all gas valves off. Open the lid and wait five minutes before attempting to relight, using the lighting instructions.**
- ⚠ **Do not use charcoal or lava rock in your Weber Gas Barbecue.**
- ⚠ **Never lean over open grill or place hands or fingers on the front edge of the cooking box.**
- ⚠ **Should a grease fire occur, turn off all burners and leave lid closed until fire is out.**
- ⚠ **Do not enlarge valve orifices or burner ports when cleaning the valves or burners.**
- ⚠ **The Weber Gas Barbecue should be thoroughly cleaned on a regular basis.**
- ⚠ **LP gas is not natural gas. The conversion or attempted use of natural gas in an LP unit or LP gas in a natural gas unit is dangerous and will void your warranty.**
- ⚠ **Do not attempt to disconnect any gas fitting while your barbecue is in operation.**
- ⚠ **Use heat-resistant barbecue mitts or gloves when operating barbecue.**

LP GAS UNITS ONLY:

- ⚠ **Use the regulator that is supplied with your Weber Gas Barbecue.**
- ⚠ **Do not attempt to disconnect the gas regulator or any gas fitting while your barbecue is in operation.**
- ⚠ **A dented or rusty LP tank may be hazardous and should be checked by your liquid propane supplier. Do not use an LP tank with a damaged valve.**
- ⚠ **Although your LP tank may appear to be empty, gas may still be present, and the tank should be transported and stored accordingly.**
- ⚠ **If you see, smell or hear the hiss of escaping gas from the LP tank:**
  1. **Get away from LP tank.**
  2. **Do not attempt to correct the problem yourself.**
  3. **Call your fire department.**

WARRANTY

Weber-Stephen Products Co. (Weber) hereby warrants to the ORIGINAL PURCHASER of this Weber Gas Barbecue that it will be free of defects in material and workmanship from the date of purchase as follows:

Aluminum Castings, 10 years,
Cooking Grates and Flavorizer Bars, 3 years,
All Remaining Parts, 5 years,

when assembled and operated in accordance with the printed instructions accompanying it.

Weber may require reasonable proof of your date of purchase. THEREFORE, YOU SHOULD RETAIN YOUR SALES SLIP OR INVOICE.

This Limited Warranty shall be limited to the repair or replacement of parts which prove defective under normal use and service and which on examination shall indicate, to Weber's satisfaction, they are defective. Before returning any parts, contact Weber-Stephen Products Co. Customer Service Center. If Weber confirms the defect and approves the claim, Weber will elect to replace such parts without charge. If you are required to return defective parts, transportation charges must be prepaid. Weber will return parts to the purchaser, freight or postage prepaid.

This Limited Warranty does not cover any failures or operating difficulties due to accident, abuse, misuse, alteration, misapplication, vandalism, improper installation or improper maintenance or service, or failure to perform normal and routine maintenance, including but not limited to damage caused by insects within the burner tubes, as set out in this owner's manual.

Deterioration or damage due to severe weather conditions such as hail, hurricanes, earthquakes or tornadoes, discoloration due to exposure to chemicals either directly or in the atmosphere, is not covered by this Limited Warranty.

There are no other express warrants except as set forth herein and any applicable implied warranties of merchantability and fitness are limited in duration to the period of coverage of this express written Limited Warranty. Some states do not allow limitation on how long an implied warranty lasts, so this limitation may not apply to you.

Weber is not liable for any special, indirect or consequential damages. Some states do not allow the exclusion or limitation of incidental or consequential damages, so this limitation or exclusion may not apply to you.

Weber does not authorize any person or company to assume for it any other obligation or liability in connection with the sale, installation, use, removal, return, or replacement of its equipment; and no such representations are binding on Weber.

This Warranty applies only to products sold at retail.

WEBER-STEPHEN PRODUCTS CO.
Customer Service Center
250 South Hicks Road
Palatine, IL 60067-6241
(800) 446-1071

LP Tank

The LP tank manufacturer is responsible for the materials, workmanship and performance of the tank. If the tank has a defect, malfunctions, or you have a question regarding the tank, call the tank manufacturer's customer service center. The phone number is on the warning decal which is permanently attached to the tank. If the tank manufacturer has not resolved the issue to your satisfaction, then call Weber-Stephen Products Co., Customer Service Center.

PATENTS AND TRADEMARKS

© 1997 Weber. Weber, , Flavorizer and Crossover are registered U.S. trademarks; Spirit, Gas Catcher, FlameCheck, and Spider Stopper are U.S. trademarks of Weber-Stephen Products Co., 200 East Daniels Road, Palatine, IL 60067-6266. U.S.A. Spirit is covered under the following patent nos.: U.S.A. #4,677,964; 4,727,853; #4,829,978; #4,941,817; and #4,966,125; Canada: #1,279,540; #1,300,994; and #1,300,995. Printed in the U.S.A.

Contents

WARNINGS **2**
Warranty & Patents 3-4
General Instructions 6
Assembly 7-21

Operating Instructions
- Lighting 22-23
- Cooking 24
- Storage and/or Nonuse 24
- Cleaning 24
- LP Tank Information 25-27

Troubleshooting & Maintenance
- Annual Maintenance 28
- General Maintenance 29-31
- Troubleshooting 32

Parts Listing 35

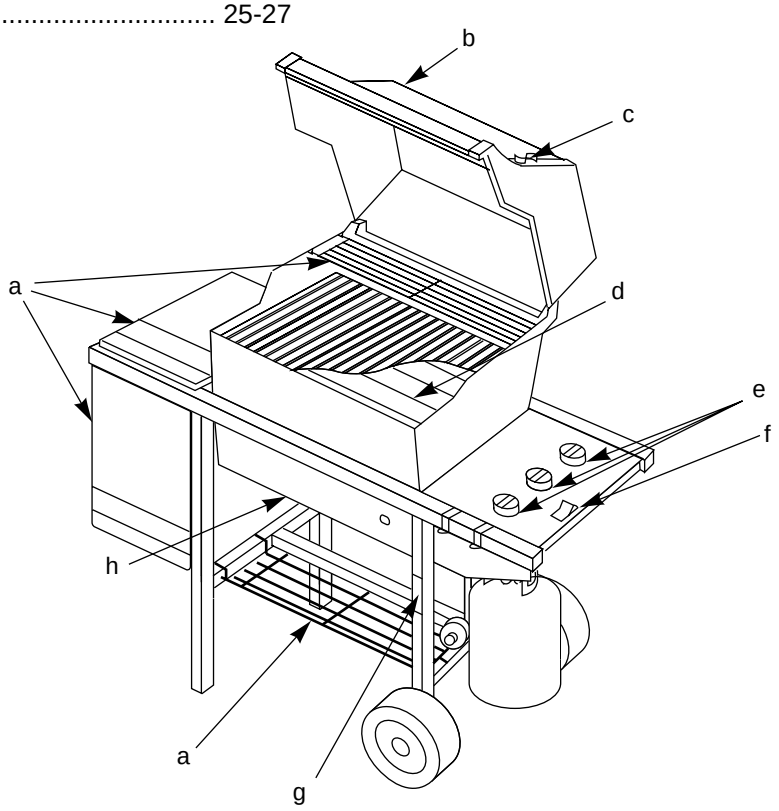

FEATURES:

a) Convenient tables and racks.

b) Heavy gauge porcelain-on-steel lid seals in heat.

c) Rapid read thermometer for precision cooking measures grill temperature, and can be removed and inserted into the food.

d) Heavy gauge steel Flavorizer Bars distribute heat within the grill. Flavorizer Bars heat just the right amount of drippings for flavoring, letting excess fat drip past to help prevent flare-ups.

e) Separate burners for temperature control.

f) Crossover Ignition System with Gas Catcher Ignition Chamber.

g) Fuel scale indicates LP gas supply.

h) Catch pan catches excess grease.

IMPORTANT NEW FEATURES:

Your Weber Gas Barbecue is equipped with a new and improved LP tank connection, that has additional safety features. They are:

1. The connection of the barbecue to the LP tank can be made without the use of tools.
2. The new connection will not permit the flow of gas until a positive gas connection is made.
3. If an accidental fire occurs at the LP tank connection, the flow of gas is stopped by a temperature activated shutoff.
4. If the LP supply hose becomes damaged, cut, punctured, or accidentally fire damaged, the barbecue connection is equipped with an excess flow control that will limit the flow of gas if leakage or a fire occurs.

General Instructions

Your Weber Gas Barbecue is a portable outdoor cooking appliance. With the Weber Gas Barbecue you can grill, barbecue, roast and bake with results that are difficult to duplicate with indoor kitchen appliances. The closed lid and Flavorizer Bars produce that "outdoor" flavor in the food.

The Weber Gas Barbecue is portable so you can easily change its location in your yard or on your patio. Portability means you can take your Weber Gas Barbecue with you if you move.

Liquid Propane (LP) gas supply is easy to use and gives you more cooking control than charcoal fuel.

- These instructions will give you the minimum requirements for assembling your Weber Gas Barbecue. Please read the instructions carefully before using your Weber Gas Barbecue. Improper assembly can be dangerous.
- Not for use by children.
- If there are local codes that apply to portable gas grills, you will have to conform to them. If there are no local codes, you must conform to the latest edition of the National Fuel Gas Code: ANSI Z 223.1.
- The pressure regulator supplied with the Weber Gas Barbecue must be used. This regulator is set for 10.5 inches of water column (pressure).
- This Weber Gas Barbecue is designed for use with liquid propane (LP) gas only. Do not use with natural (piped in city) gas. The valves, orifices, hose and regulator are for LP gas only.
- Do not use with charcoal fuel.
- Check that the area under the control panel and the bottom tray are free from debris that might obstruct the flow of combustion or ventilation air.
- The area around the LP tank must be free and clear from debris.

For Installation in Canada

These instructions, while generally acceptable, do not necessarily comply with the Canadian Installation codes, particularly with piping above and below ground. In Canada the installation of this appliance must comply with local codes and/or Standard CAN/CGA-B149.2 (Installation Code for Propane Burning Appliances and Equipment).

Storage

- The gas must be turned OFF at the LP tank when the Weber Gas Barbecue is not in use.
- When the Weber Gas Barbecue is stored indoors, the gas supply must be disconnected and the LP tank stored outdoors in a well-ventilated space.
- LP tanks must be stored outdoors in a well-ventilated area out of the reach of children. Disconnected LP tanks must not be stored in a building, garage or any other enclosed area.
- When the LP tank is not disconnected from the Weber Gas Barbecue, the appliance and LP tank must be kept outdoors in a well-ventilated space.

Operating area

⚠WARNING: <u>Only</u> use this barbecue outdoors in a well ventilated area. Do not use in a garage, building, breezeway or any other enclosed area.

- Never use your Weber Gas Barbecue under an unprotected combustible roof or overhang.
- Your Weber Gas Barbecue is not intended to be installed in or on recreational vehicles and/or boats.
- Do not use combustible materials within 24 inches of the top, bottom, back or sides of the grill.
- The entire cooking box gets hot when in use. Do not leave unattended.
- Keep any electrical supply cord and the fuel supply hose away from any heated surface.
- Keep the cooking area clear of flammable vapors and liquids, such as gasoline, alcohol, etc., and combustible materials.
- Never store an extra (spare) LP tank under or near the Weber Gas Barbecue.

Assembly

Tools needed

Hammer 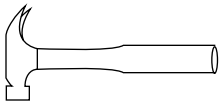

7/16 inch open-end or an adjustable wrench

Pliers

Block of wood 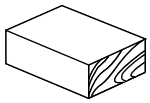

Phillips screwdriver 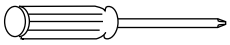

Supplies needed

Your LP tank is shipped empty for safety. After setting the LP fuel scale you will need to fill it. (See Step "Fill LP tank.")

You will need a soap and water solution to check for gas leaks. (See Step "Check for gas leaks.")

Note - The hardware size of nuts, bolts and screws is given. For example "1/4-20 x 2 inch bolt" means a bolt 1/4 inch in diameter with 20 threads to the inch, 2 inches long. On a small screw for example, "6-32 x 1/2 inch screw" means a number 6 screw, with 32 threads to the inch, 1/2 inch long.

While we give much attention to our products, unfortunately an occasional error may occur. If a part is missing, do not go back to the store. Call the Weber Customer Service Center toll free **1-800-446-1071** to receive immediate assistance. Have your owner's manual and serial number of the barbecue available for reference.

Step 1

Check package contents

Cooking box (assembly)

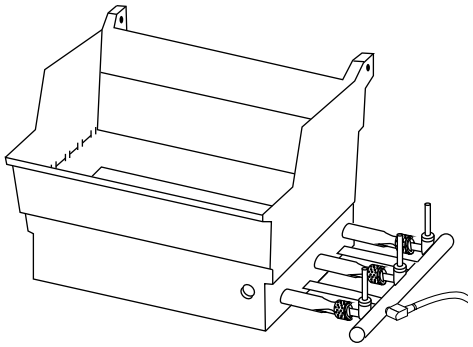

Lid (assembly)

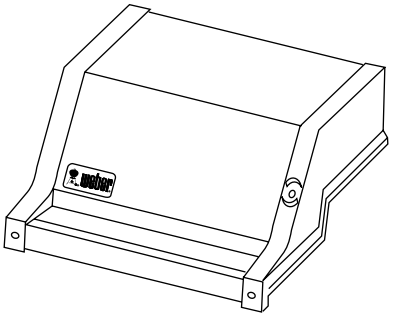

LP tank

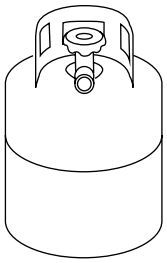

Bottom tray

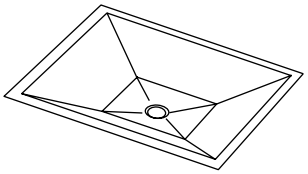

Two cooking grates

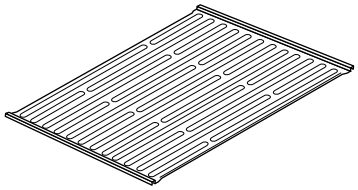

LP tank filler adapter

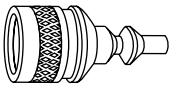

Control panel

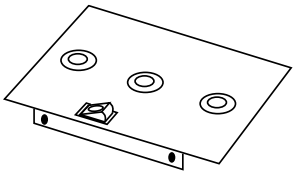

Left frame

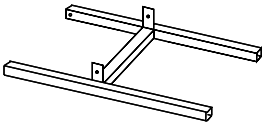

Right frame

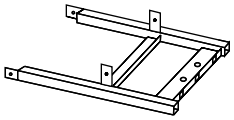

Wheel frame

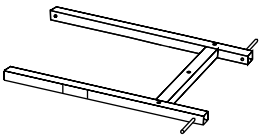

Leg frame

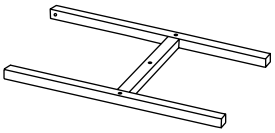

Frame connector

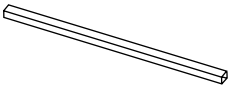

Molded work table

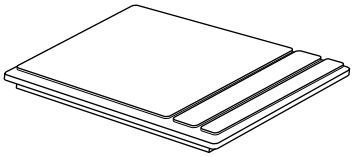

Molded swing table assembly

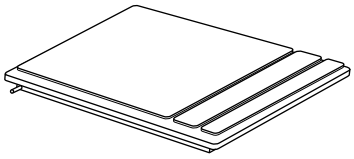

Support rod

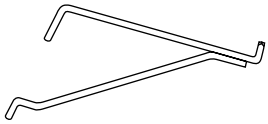

Accessory rack

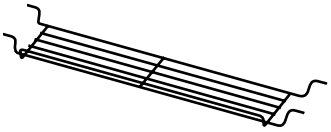

Warming rack

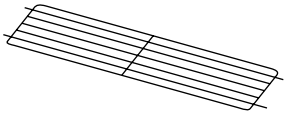

Five Flavorizer Bars

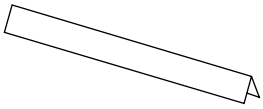

Tank panel assembly

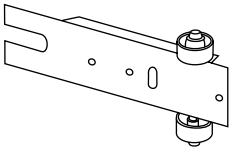

Front panel

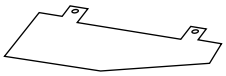

Catch pan holder

Catch pan

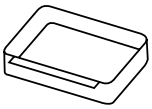

Two drip pans

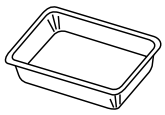

Manifold bracket

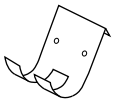

Thermometer

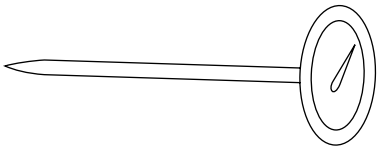

Two wheels

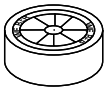

Fuel scale assembly

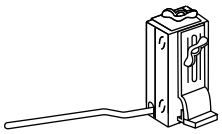

Check contents of hardware packs

Three burner control knobs

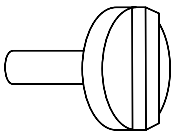

Two tool holders

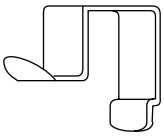

Seven tubing plugs
(two are spares)

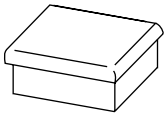

Support rod holder

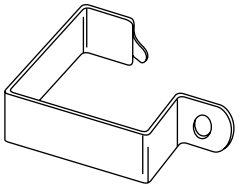

Swing table end bracket

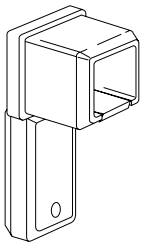

Two hinge pins
(hardware size: 1/4 x 1 1/2 inch clevis pin)
(actual size)

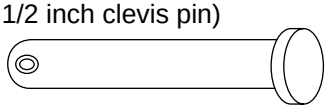

1/4-20 x 2 inch bolt
(actual size)

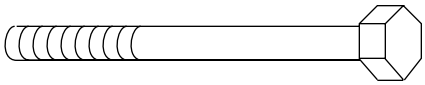

Two 1/4-20 x 1 3/4 inch bolts
(actual size)

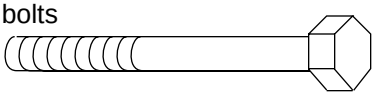

Six 1/4-20 x 1/2 inch bolts
(actual size)

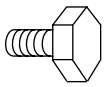

Two plastic buttons
(actual size)

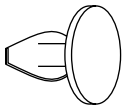

Two 1/4-20 wing nuts
(actual size)

Ten 1/4 inch nylon washers

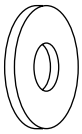

Two hair pin cotters

Two wheel hubcaps

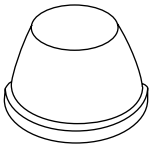

Work table spacer

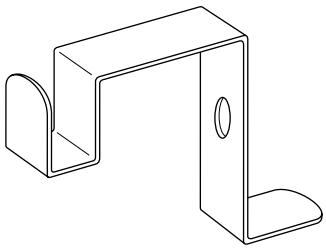

1/4-20 keps nut

Two Philllips screws/washers

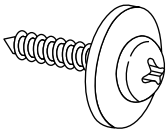

Step 2

Assemble wheel frame

You will need: wheel frame, two wheels, two wheel hubcaps, hammer and a block of wood.

Set one end of wheel frame on the block of wood (or other hard, protected surface). Put one wheel on axle, WEBER side facing up, and tap on one hubcap.Figure 1.

Repeat with other wheel and hubcap.

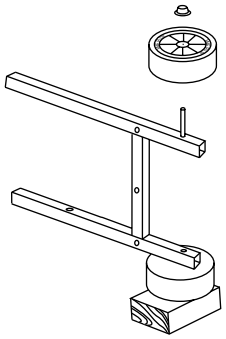

Figure 1

Step 3

Assemble top frame

You will need: left frame, right frame, two 1/4-20 x 1/2 inch bolts, two nylon washers and a 7/16 inch wrench.

Note - Work on carpeted area (on grass or one of the boxes) to protect the finish during frame assembly.

Lay the leg pieces as shown so the leg tabs point up. Figure 2.

Slip the two frame pieces together with the tabs inside. Figure 2 (a). Slip washers on bolts, insert bolts as shown and tighten. Figure 2 (b). (If you try to insert a bolt and there are no holes, you have the left frame turned the wrong way. Turn the left frame around.)

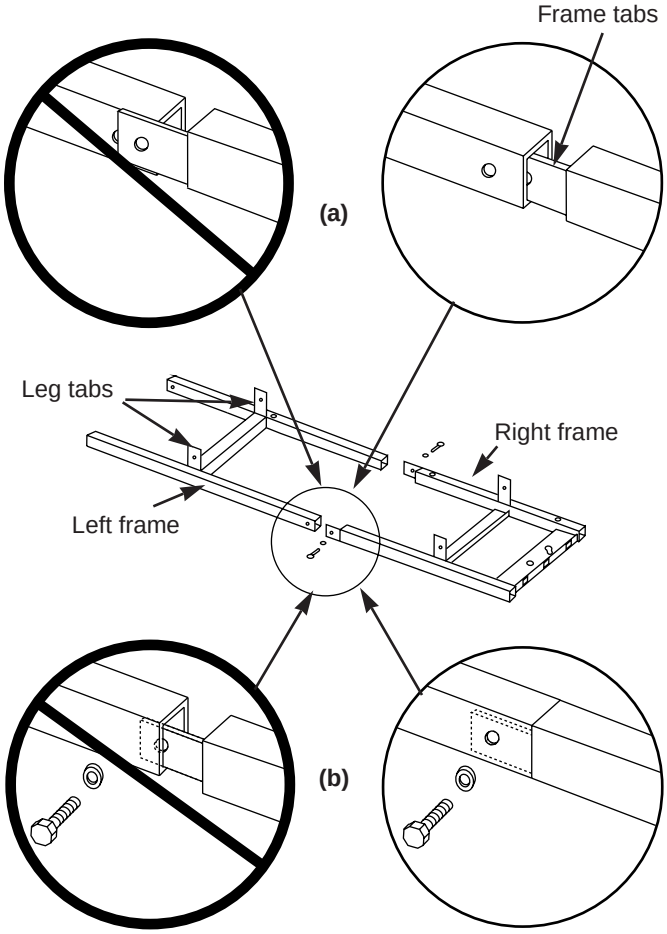

Figure 2

Step 4

Continue frame assembly

You will need: leg frame, wheel frame, four 1/4-20 x 1/2 inch bolts, four nylon washers and a 7/16 inch wrench.

Place the leg frame onto the tabs of the left frame with the dimple to the inside. Figure 3. Place the wheel frame onto the tabs of the right frame with the dimple to the inside. The fuel scale decal should face away as shown. Figure 3.

The leg tabs must be on the inside of the frames.

Add the washers to the bolts, insert in the holes as shown and tighten with the wrench. Figure 3.

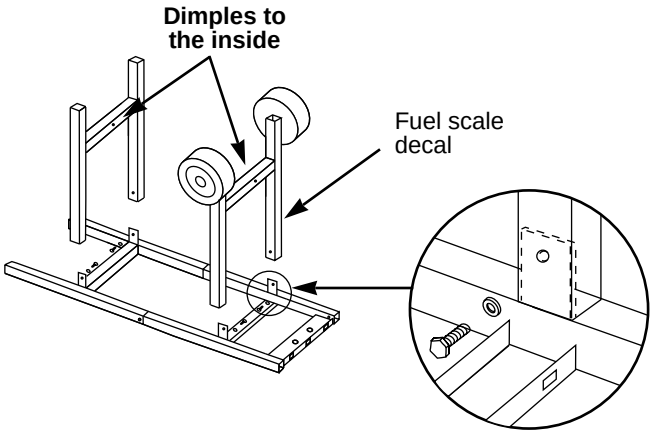

Figure 3

Step 5

Install tubing plugs

You will need: two tubing plugs and a hammer.

Insert tubing plugs into the ends of the leg frame. Figure 4. To fully seat the plugs, you may have to tap them lightly with a hammer.

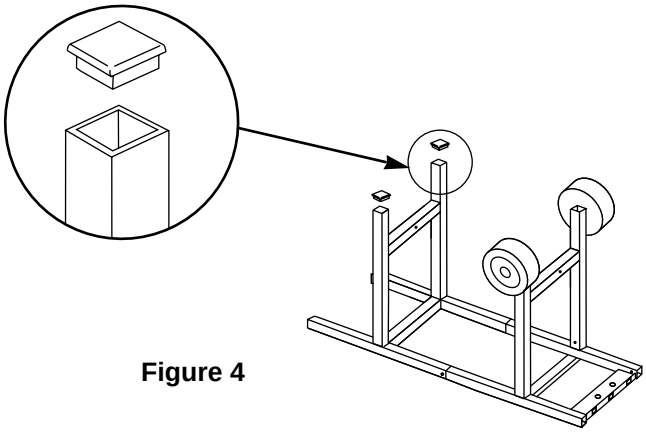

Figure 4

Step 6

Add front panel

You will need: front panel and two plastic buttons.

Turn frame assembly right side up.

Align the panel with the holes in the frame and insert the plastic buttons through the front panel and frame. Figure 5.

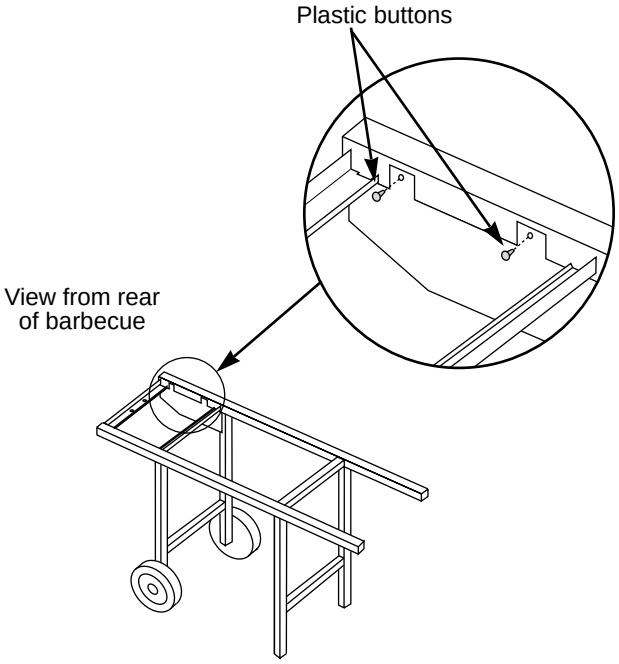

Figure 5

Step 7

Add cooking box

You will need: frame assembly, cooking box assembly, work table spacer, 1/4-20 keps nut, 1/4-20 x 2 inch bolt, pliers and a 7/16 inch wrench.

Uncoil the hose.

Set the cooking box in the frame so the burner tubes are under the frame brace. Figure 6.

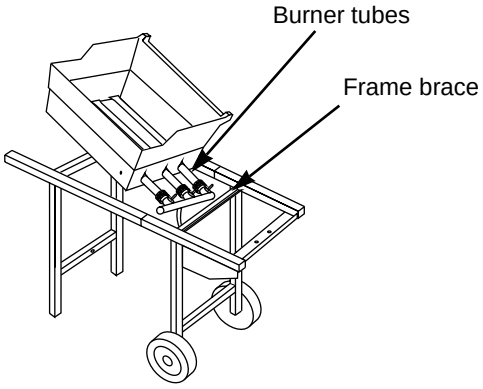

Figure 6

Slide the cooking box to the left within the frame. Hold the work table spacer up to the frame. Insert the bolt through the hole in the work table spacer, frame and cooking box with the head of the bolt outside the box. Figure 7. Add keps nut. Tighten by holding the bolt with pliers while you tighten the nut with a wrench.

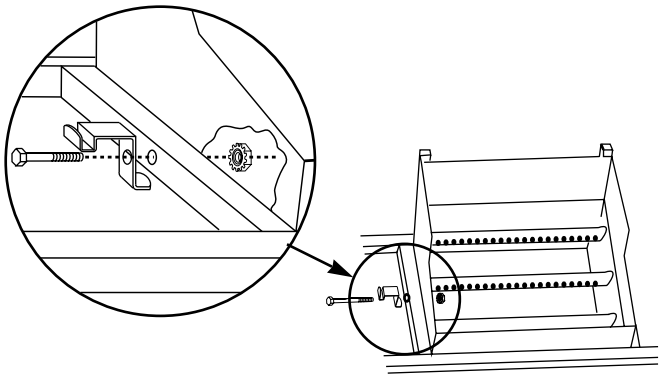

Figure 7

Your Weber Gas Barbecue burner assembly has been factory assembled, pressure and flame tested. As a safety precaution we recommend you check the burner alignment:

a) Do the valves fit into the ends of the burners? Figure 8 (a).

b) Are the ends of the burners under the washers at the left rear and left front of the cooking box? The screws are only guides. Do not tighten. Figure 8 (b).

c) Are the wing nuts under the burner assembly hand tight? Do not tighten with pliers. Figure 8 (c).

If you answered YES to a, b and c, the burners are correctly aligned. If you answered NO, the burners are misaligned. Contact Weber-Stephen Customer Service. Do not use barbecue.

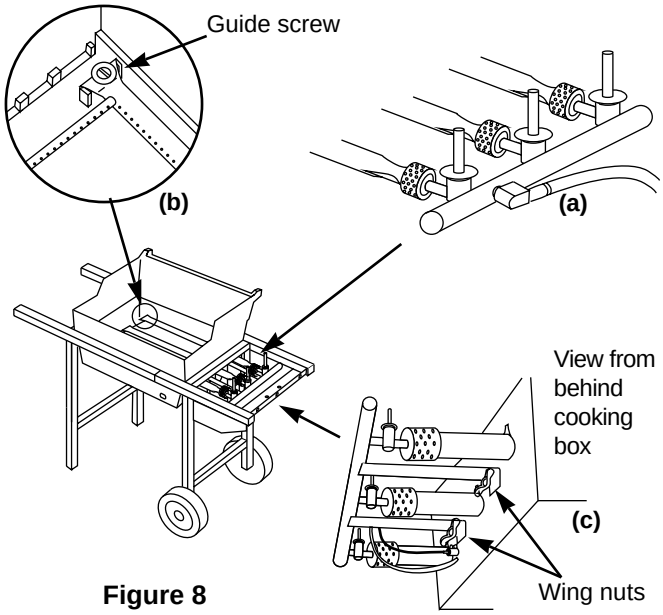

Figure 8

Step 8

Install manifold bracket

You will need: manifold bracket

Hook the bracket onto the manifold at the center burner valve. Figure 9. Place your hand underneath the bracket. Lift the manifold, bracket and cooking box slightly and hook the tab of the bracket onto the frame brace.

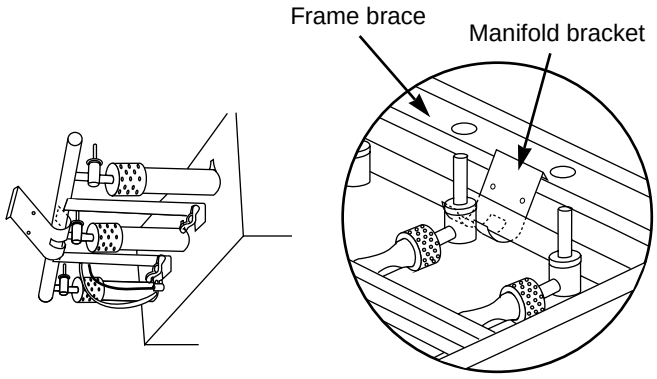

Figure 9

Step 9

Install tank panel assembly and frame connector

You will need: tank panel assembly, frame connector, two 1/4-20 x 1 3/4 inch bolts, two nylon washers and a 7/16 inch wrench.

Insert the tank panel tabs into the slots in the frame brace. Figure 10.

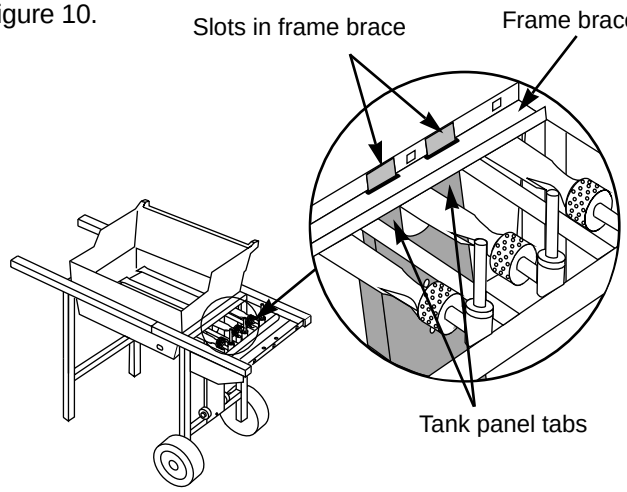

Figure 10

Slide tank panel up until notch at bottom of panel fits over the cross brace. Insert one bolt with washer through the hole in the bottom of the tank panel, through the wheel frame and into the end of the frame connector. Insert the other bolt with washer through the leg frame and into the other end of the frame connector. Hold the frame connector square and tighten the bolts. Figure 11.

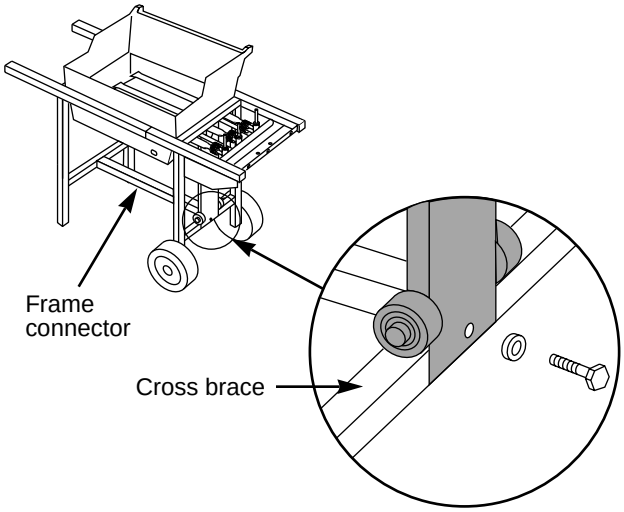

Figure 11

Step 10

Add fuel scale assembly

You will need: fuel scale assembly, two 1/4-20 wing nuts and two nylon washers.

Slip the bolts on the back of the fuel scale assembly through the two small holes in the tank panel. Make sure indicator rod of fuel scale is on the left side of the wheel frame.

Add washers then wing nuts and tighten. Figure 12.

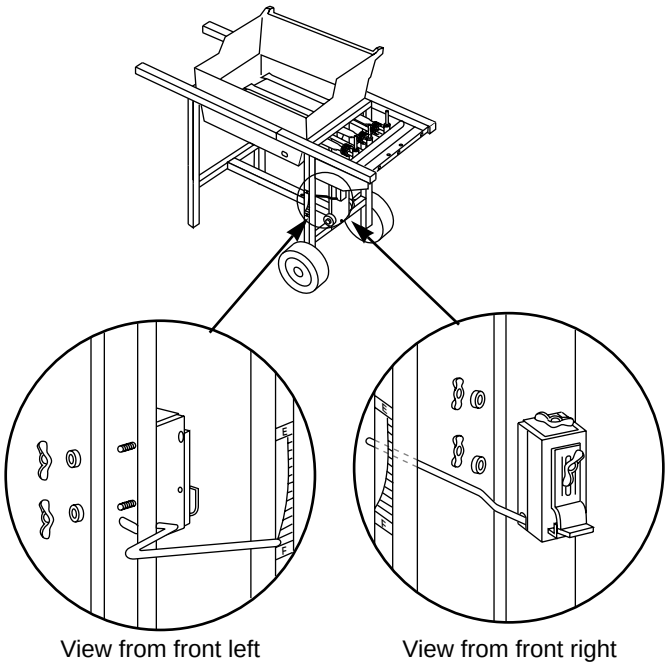

Figure 12

Step 11

Install igniter

Note - The igniter wires are already attached to the Gas Catcher Ignition Chamber and the igniter. This was done to factory test the ignition system.

The igniter lock nut is on the igniter.

Insert the top of the igniter up through the large part of the keyhole in the frame brace. Figure 13 (b). Loosen the igniter lock nut and slide the igniter into the small part of the keyhole. Figure 13 (c). Tighten the igniter lock nut. Figure 13.

Note - If the igniter works loose, carefully tighten the igniter lock nut with an adjustable wrench or pliers.

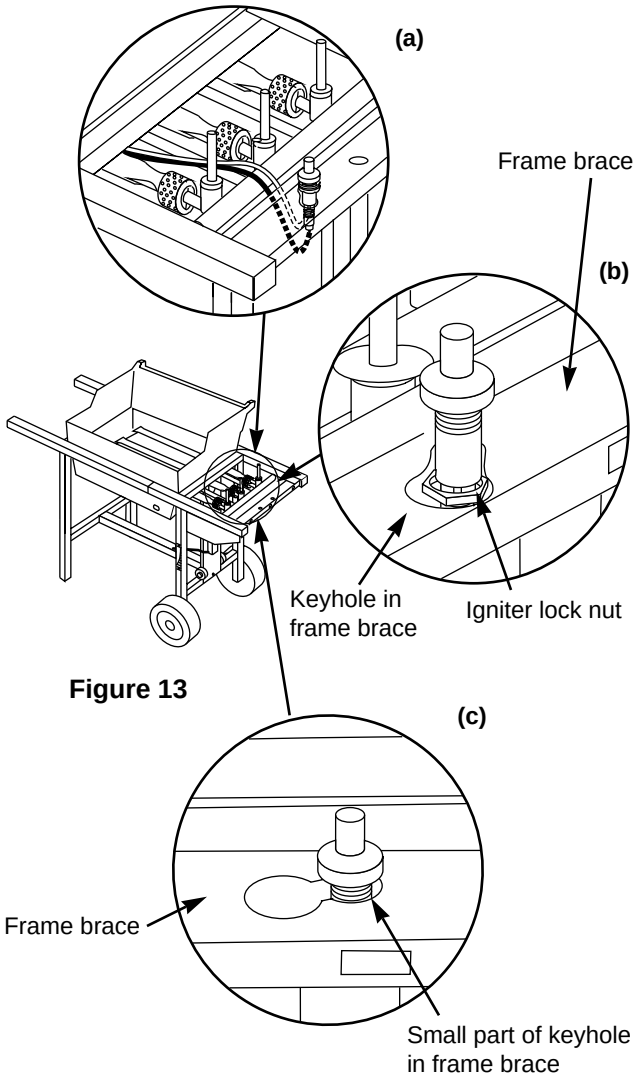

Figure 13

Step 12

Set LP fuel scale

You will need: LP tank (empty).

Note - For accuracy, the fuel scale must be set with an empty tank.

We utilize various LP tank manufacturers. Some of the tanks we receive have differing top collar assemblies. (The top collar is the metal protective ring around the valve.) One series of tanks mounts with the valve facing front. The other tanks mount with the valve facing away from the fuel scale. These types of tanks are illustrated in Figure 14.

Loosen the tank lock wing nut. Tighten so the lock is held up out of the way. Figure 14 (a). Lift and hook the tank onto the fuel scale. With an empty LP tank, adjust the fuel scale setting to E with scale setting (top) wing nut. Figure 14 (b).

⚠CAUTION: Do not remove adjustment wing nut from tank scale.

After adjusting tank scale, push tank down a couple of times to check that the tank scale is set on “E”.

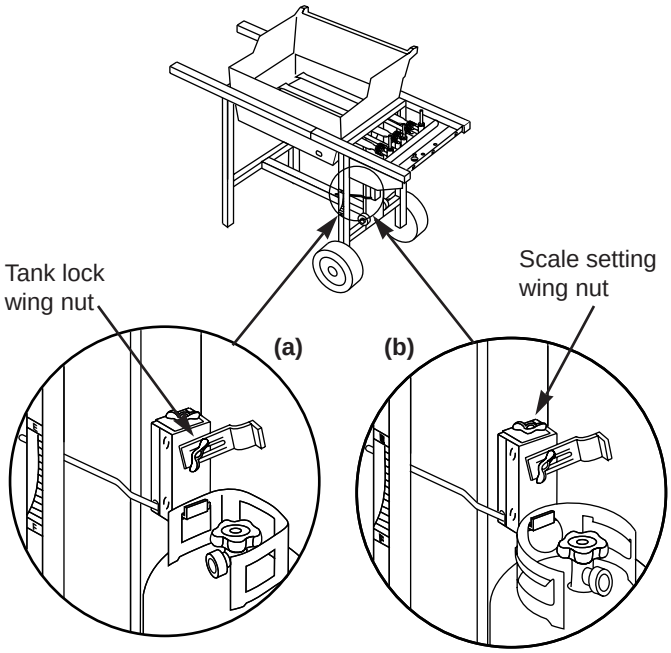

Figure 14

Step 13

Fill LP tank

Note - The LP tank manufacturer is responsible for the materials, workmanship and performance of the tank. If the tank has a defect, malfunctions, or you have a question regarding the tank, call the tank manufacturer's customer service center. The phone number is on the warning decal which is permanently attached to the tank. If the tank manufacturer has not resolved the issue to your satisfaction, then call Weber-Stephen Products Co., Customer Service Center.

To fill, take the LP tank and filler adapter to an RV center or look up gas-propane in the phone book for other sources of LP gas.

⚠WARNING: We recommend that your LP tank be filled at an authorized LP gas dealer by a qualified attendant, who fills the tank by weight.

IMPROPER FILLING IS DANGEROUS.

Tell your LP dealer that this is a new LP tank. The air must be removed from a new LP tank before the initial filling. Your LP tank dealer is equipped to do this.

⚠WARNING: If you exchange your LP tank, make sure you get a similar tank in return. Your LP tank is equipped with a quick-disconnect valve and an OPD (Overfilling Prevention Device). Other LP tanks are not compatible with your barbecue connection.

The LP tank must be installed, transported and stored in an upright position. LP tank should not be dropped or handled roughly.

Never store or transport the LP tank where temperatures can reach 125° Fahrenheit (too hot to hold by hand – for example: do not leave the LP tank in a car on a hot day).

For full instructions on safe handling of LP tanks, see Section "Safe handling tips for LP gas".

Step 14

Check that all burner valves are off

Valves are shipped in the OFF position, but you should check to be sure. Put the knob on each valve. Check by pushing down and turning clockwise. If they do not turn they are off, proceed to the next step. Figure 15.

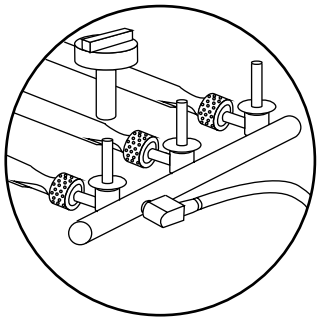

Figure 15

Step 15

Connect LP tank

⚠WARNING: Make sure that the LP tank valve is closed. Close by turning clockwise.

Hook the LP tank onto the fuel scale. Loosen the tank lock wing nut. Swing the tank lock down. Tighten the wing nut. Figure 16.

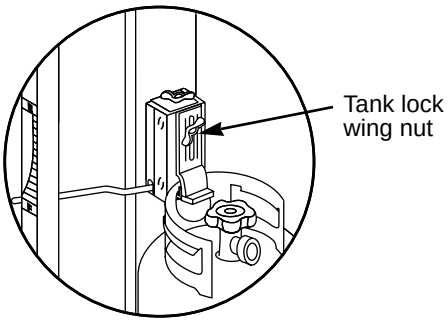

Figure 16

Route the hose so it will not interfere with the scale indicator rod.

The hose and regulator are connected in the following manner:

Slide back the collar of the quick disconnect on the tank valve. Push the male fitting of the regulator into the quick disconnect, and maintain pressure. Slide the collar closed. Figure 17 (a). Figure 17 (b) shows the quick disconnect engaged and various components of the tank and regulator. Regulator vent hole should be at 3, 6, or 9 o'clock. It should not be pointed up. Figure 17 (c).

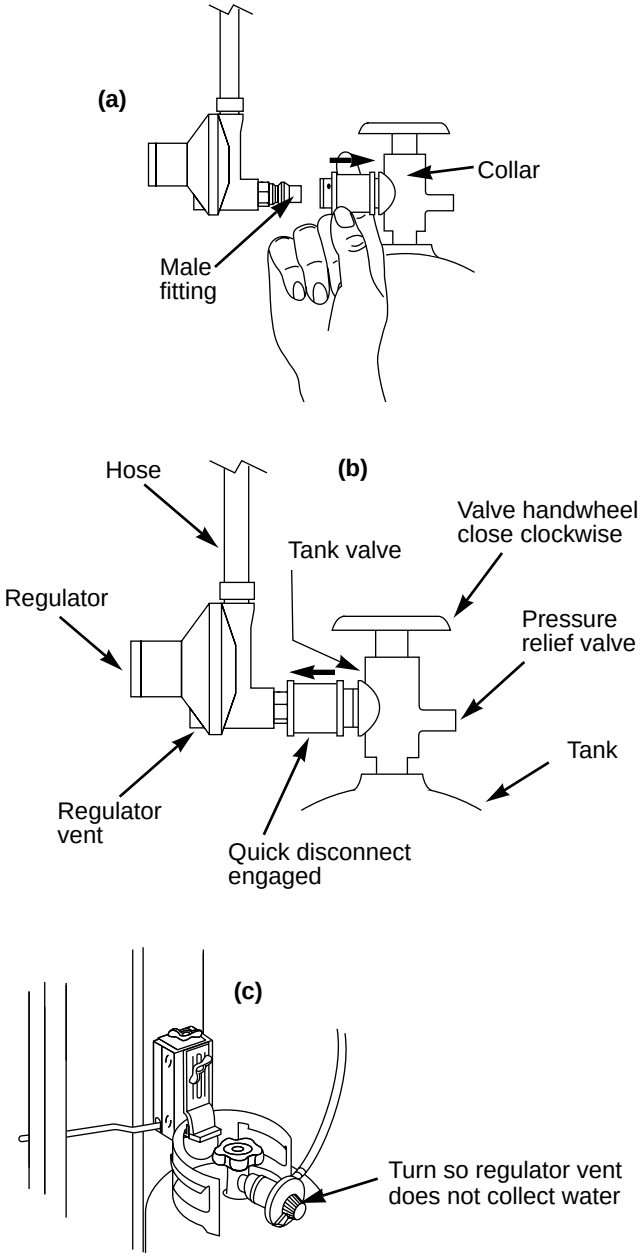

Figure 17

Step 16

Check for gas leaks

> **⚠ DANGER**
> **Do not use an open flame to check for gas leaks. Be sure there are no sparks or open flames in the area while you check for leaks. This will result in a fire or explosion which can cause serious bodily injury or death and damage to property.**

⚠WARNING: You should check for gas leaks every time you disconnect and reconnect a gas fitting.

Note - All factory made connections have been thoroughly checked for gas leaks. The burners have been flame tested. As a safety precaution you should recheck all fittings for leaks before using your Weber Gas Barbecue. Shipping and handling may have loosened or damaged a gas fitting.

⚠WARNING: Perform these leak checks even if your barbecue was dealer or store assembled.

You will need: a soap and water solution and a rag or brush to apply it.

To perform leak checks: open tank valve by turning the tank valve handwheel counterclockwise. Figure 18.

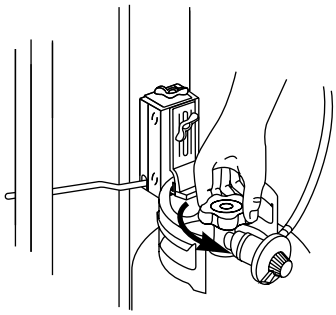

Figure 18

Check for leaks by wetting the connections with the soap and water solution and watching for bubbles. If bubbles form or if a bubble grows there is a leak.

Note *- Since some leak test solutions, including soap and water, may be slightly corrosive, all connections should be rinsed with water after checking for leaks.*

⚠WARNING: Do not ignite burners when leak checking.

Check:

a) Hose to manifold connection. Figure 19 (a).

b) Regulator to tank connection. Figure 19 (b).

⚠WARNING: If there is a leak at connection (a) retighten the fitting with a wrench and recheck for leaks with soap and water solution.

If a leak persists after retightening the fitting, turn OFF the gas. DO NOT OPERATE THE BARBECUE. Contact Weber-Stephen Customer Service.

c) Valves to manifold connections. Figure 19 (c).

d) The hose to regulator connection. Figure 19 (d).

⚠WARNING: If there is a leak at connections (b), (c) or (d), turn OFF the gas. DO NOT OPERATE THE BARBECUE. Contact Weber-Stephen Customer Service.

When leak checks are complete, turn gas supply OFF and rinse connections with water.

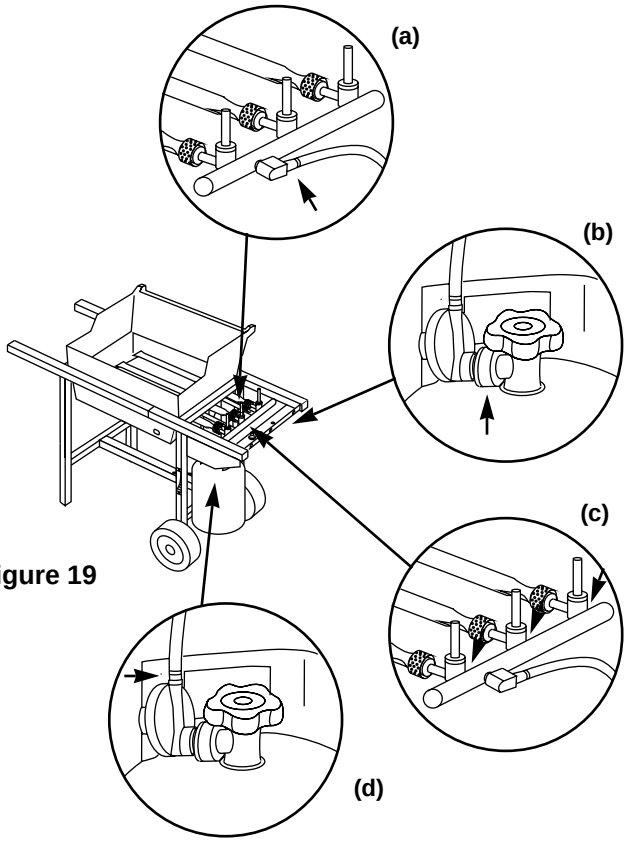

Figure 19

Step 17

Install Flavorizer Bars and Cooking Grates

You will need: five Flavorizer Bars and two cooking grates.

Set the Flavorizer Bars side to side in the cooking box. Figure 20.

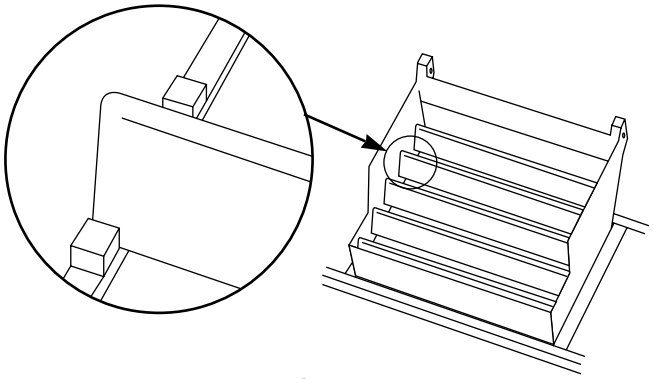

Figure 20

Set the cooking grates onto the ledges in the cooking box with the rounded side up. Figure 21.

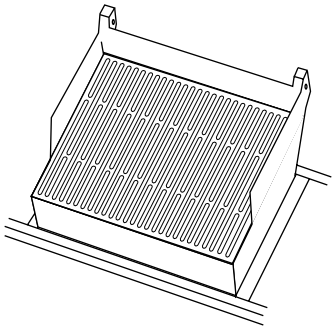

Figure 21

Step 18

Install the bottom tray

You will need: bottom tray, catch pan holder, catch pan and one drip pan.

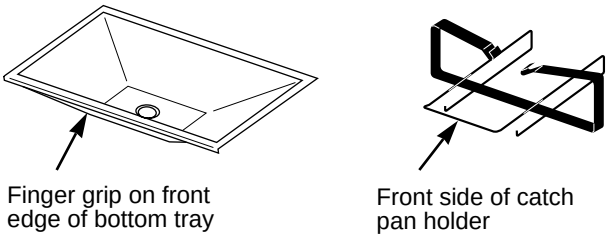

Figure 22

Hook the ends of the catch pan holder into the hole in the bottom tray. Figure 23. **The front of the catch pan holder must be on the same side as the finger grip of the bottom tray.**

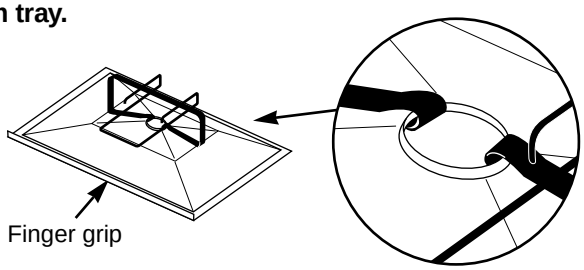

Figure 23

Slide the bottom tray onto the mounting rails under the cooking box with finger grip toward you. Figure 24.

⚠CAUTION: Do not line bottom tray with aluminum foil. It can cause grease fires by trapping the grease and not allowing grease to flow into the catch pan.

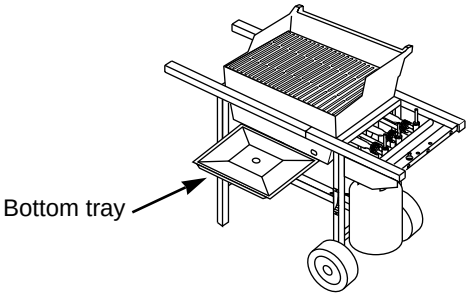

Figure 24

Put the foil drip pan into the catch pan.

Slide the catch pan into the catch pan holder with its finger grip towards you.

Step 19

Install Lid

You will need: lid, two hinge pins and two hair pin cotters.

Set the lid in place. Align the hinges at the rear of the barbecue. Insert hinge pins from the outside. Insert hair pin cotters into the small holes in the hinge pins. Figure 25.

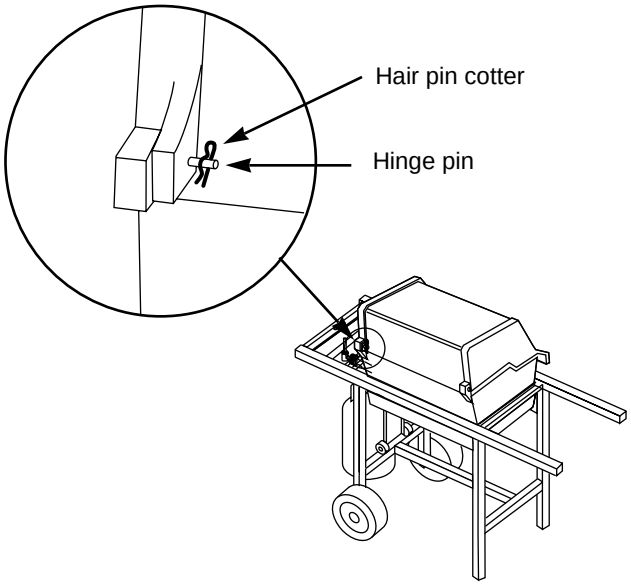

Figure 25

Step 20

Add tool holders, control panel and burner control knobs

You will need: two tool holders, control panel, two Phillips screws/washers, a Phillips screwdriver, and three burner control knobs.

Hook the tool holders over the frame rail. Figure 26.

Set the control panel in place over both frame braces. (Hold the Crossover Ignition button up while setting the control panel in place.) Line up the holes in the control panel with the holes in the inserts in the frame brace. Insert screws and tighten with a Phillips screwdriver until snug. Do not overtighten. Figure 26 (a).

Push on the burner control knobs. Figure 26 (b).

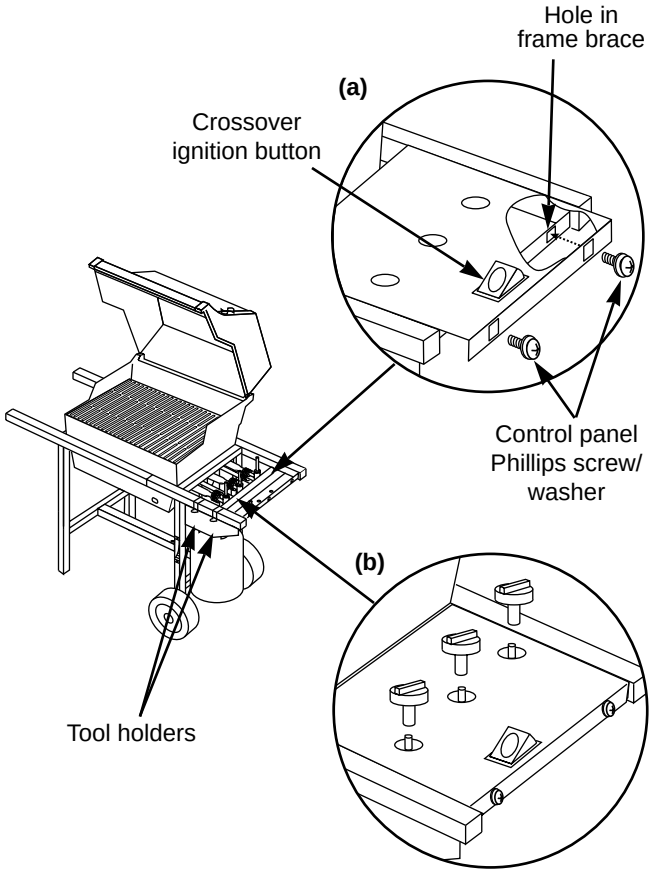

Figure 26

Step 21

Install Swing Table

You will need: swing table assembly, support rod, support rod holder and swing table end bracket.

Insert the ends of the support rod through the lower keyholes in the swing table. Figure 27 (a). Slide until the tabs on the support rod pass through the keyholes. Figure 27 (b). To keep the support rod in place, rotate the rod so the tab is **not** lined up with the keyhole. Figure 27 (c).

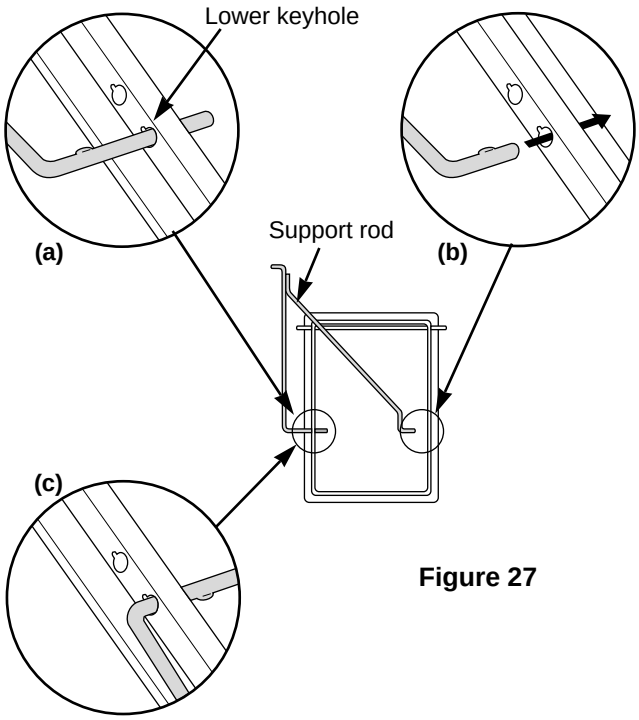

Figure 27

Insert one end of the hinge rod into the hole in the frame. Figure 28 (a).

Insert the other end into the hole in the swing table end bracket. Figure 28 (b). Hold the end bracket at an angle so the lower tab is inside the frame tube. Push the bracket into the frame. Check to see that the lower tab of the bracket is hooked in the slot in the frame. Figure 28 (c).

To fully seat the bracket, you may have to tap it lightly with a hammer.

⚠WARNING: If swing table end bracket is in any way cracked or damaged, do not use swing table. Call our Customer Service Center to order a new part.

Install support rod holder on leg. Figure 28 (d). Hook the support rod into the support rod holder.

⚠WARNING: The load limit for the swing table is 30 pounds.

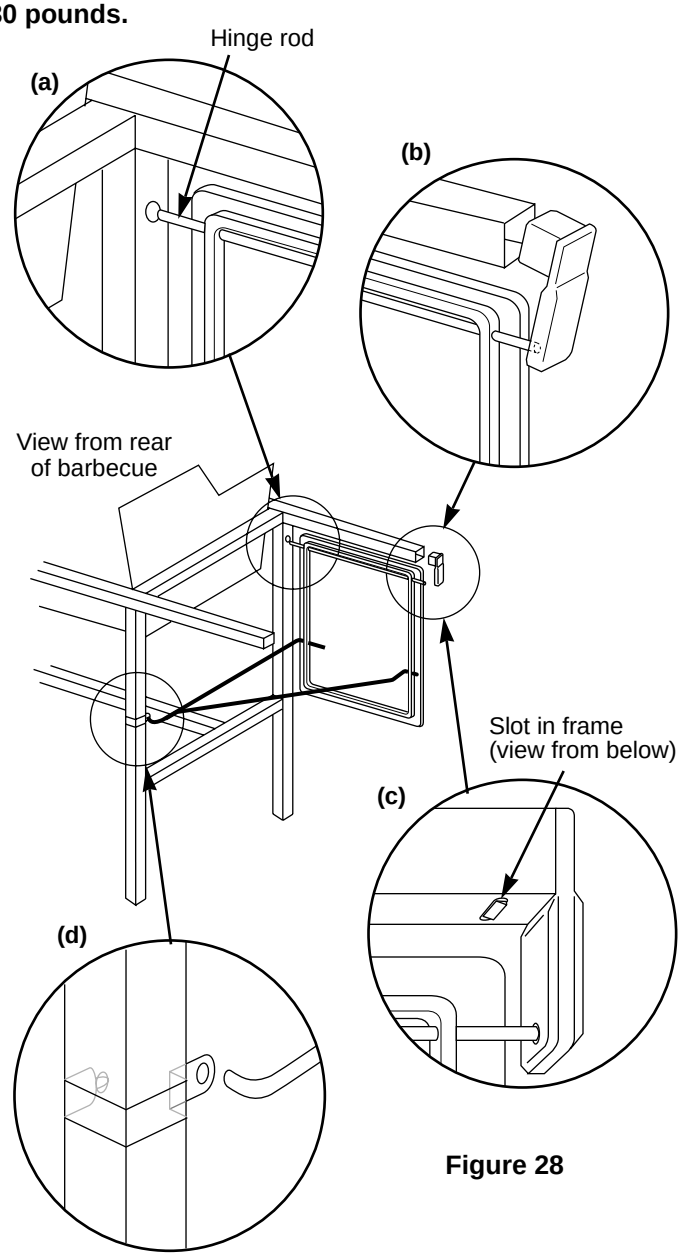

Figure 28

Step 22

Complete accessory installation

You will need: work table, accessory rack, warming rack, three tubing plugs and thermometer.

Set the accessory rack across the bottom braces in front of the frame connector. Figure 29 (a).

Open the lid and set the warming rack into the slots at the rear of the cooking box. Figure 29 (b).

Set the work table onto the left side rails and work table spacer. Figure 29 (c).

Note: Work table should rest between the frame rails and on the work table spacer installed in "Add Cooking Box" step.

Insert the thermometer into its holder. Figure 29 (d).

Insert the tubing plugs into the ends of the frame. To fully seat the plugs, you may have to tap them lightly with a hammer. Figure 29 (e).

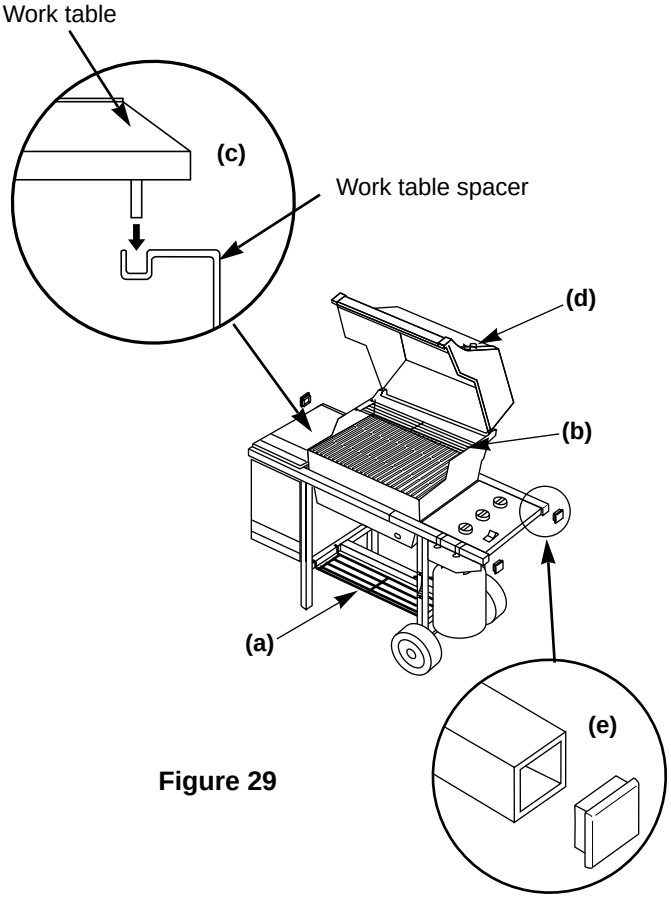

Figure 29

Lighting

Summary lighting instructions are on the control panel.

⚠ DANGER

Failure to open lid while igniting the barbecue, or not waiting 5 minutes to allow the gas to clear if the barbecue does not light, may result in an explosive flame-up which can cause serious bodily injury or death.

Crossover Ignition System

Note - The Crossover Ignition System ignites the Front burner with a spark from the igniter electrode inside the Gas Catcher Ignition Chamber. You generate the energy for the spark by pushing the Crossover Ignition Button until it clicks.

⚠WARNING: Check hose before each use of barbecue for nicks, cracking, abrasions or cuts. If the hose is found to be damaged in any way, do not use the barbecue. Replace using only Weber authorized replacement manifold assembly. Order from Weber-Stephen Products Co., Customer Service Center or authorized dealer.

Crossover Ignition System

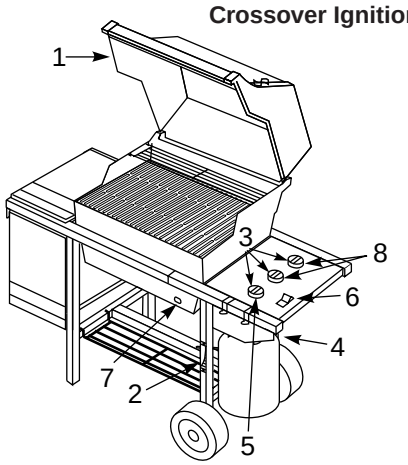

Figure 1

1) Open the lid. Figure 1.
2) Check that the fuel scale reads more than “E”.
   Note - E = empty; F = full.
3) Make sure all burner control knobs are turned OFF. (Push each knob down and turn clockwise.)

⚠WARNING: The burner control knobs must be in the OFF position before turning on the LP tank valve. If they are not in the OFF position, when you turn on the LP tank valve, the excess flow control will activate, limiting the flow of gas from the LP tank. If this should occur, turn OFF the LP tank valve and burner control knobs and start over.

⚠ DANGER

When the excess flow control is activated, a small amount of gas is still flowing to the burners. After turning OFF the tank and burner control knobs, wait at least 5 minutes for the gas to clear before attempting to light the barbecue. Failure to do so may result in an explosive flame-up which can cause serious bodily injury or death.

4) Turn the tank on by turning the tank valve counterclockwise.

⚠WARNING: Do not lean over open barbecue. Keep your face and body at least one foot away from the matchlight hole when lighting the barbecue.

5) Push Front burner control knob down and turn to START / HI.
6) Push the Crossover Ignition Button several times, so it clicks each time.
7) Check that the burner is lit by looking through the matchlight hole on the front of the cooking box.

⚠WARNING: If the burner does not light, turn the Front burner control knob to OFF and wait 5 minutes to let the gas clear before you try again or try to light with a match.

8) After the FRONT burner is lit you can turn on the other burners.

Note - Always light the FRONT burner first. The other burners ignite from the FRONT burner.

To Extinguish

Turn gas supply OFF at the source, then push down and turn each burner control knob clockwise to OFF.

Manual Lighting

⚠ DANGER

Failure to open lid while igniting the barbecue, or not waiting 5 minutes to allow the gas to clear if the barbecue does not light, may result in an explosive flame-up which can cause serious bodily injury or death.

1) Open the lid. Figure 2.
2) Check that fuel scale reads more than “E”.
   Note - E = empty; F = full.
3) Make sure all burner control knobs are turned OFF. (Push each knob down and turn clockwise.)

⚠WARNING: The burner control knobs must be in the OFF position before turning on the LP tank valve. If they are not in the OFF position, when you turn on the LP tank valve, the excess flow control will activate, limiting the flow of gas from the LP tank. If this should occur, turn OFF the LP tank valve and burner control knobs and start over.

⚠ DANGER

When the excess flow control is activated, a small amount of gas is still flowing to the burners. After turning OFF the tank and burner control knobs, wait at least 5 minutes for the gas to clear before attempting to light the barbecue. Failure to do so may result in an explosive flame-up which can cause serious bodily injury or death.

Manual Lighting

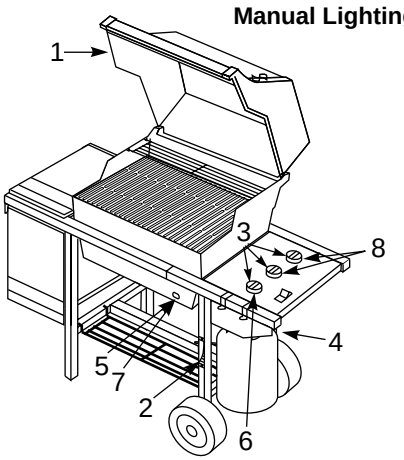

Figure 2

4) Turn the tank on by turning the tank valve counterclockwise.
5) Strike a match and put the flame into the matchlight hole in the front of the cooking box.

⚠WARNING: Do not lean over open barbecue. Keep your face and body at least one foot away from the matchlight hole when lighting the barbecue.

6) Push Front burner control knob down and turn to START / HI.
7) Check that the burner is lit by looking through the matchlight hole on the front of the cooking box.

⚠WARNING: If the burner does not light, turn the Front burner control knob to OFF and wait 5 minutes to let the gas clear before you try again or try to light with a match.

8) After the FRONT burner is lit you can turn on the other burners.

Note - Always light the FRONT burner first. The other burners ignite from the FRONT burner.

To Extinguish

Turn gas supply OFF at the source, then push down and turn each burner control knob clockwise to OFF.

Cooking

⚠WARNING: Do not move the Weber Gas Barbecue when operating or hot.

You can adjust the FRONT, CENTER and BACK burners as desired. The control settings High (H), Medium (M), Low (L), or Off (O) are described in your Weber cookbook. The cookbook uses these notations to describe the settings of the FRONT, CENTER, and BACK burners. For example, to sear steaks you would use (HHH) (all burners at high). Then to complete cooking you would use (MOM) (FRONT at medium, CENTER off, and BACK at medium). See your Weber cookbook for detailed cooking instructions.

Note: The temperatures inside your cooking box, for the first few uses, while surfaces are still very reflective, may be hotter than those shown in your cookbook. Cooking conditions may require the adjustment of the burner controls to attain the correct cooking temperatures.

⚠CAUTION: Replace thermometer in lid when not in use. Do not leave thermometer in food while cooking.

If burners go out during cooking, open lid, turn off all burners and wait 5 minutes before relighting.

Preheating

Your Weber Gas Barbecue is an energy efficient appliance. It operates at a low B.T.U. rate for economy. To preheat, after lighting, close lid and turn all burners to high (HHH). Preheating to between 500° and 550° F (260° and 290° C) will take 10 to 15 minutes depending on conditions such as air temperature and wind.

Drippings and grease

The Flavorizer Bars are designed to "smoke" the right amount of drippings for flavorful cooking. Excess drippings and grease accumulate in the catch pan under the bottom tray. Disposable foil liners are available that fit the catch pan.

⚠WARNING: Check the bottom tray for grease build-up before each use. Remove excess grease to avoid a grease fire in the bottom tray.

Storage and/or Nonuse

- The gas must be turned off at the LP tank when the Weber Gas Barbecue is not in use.
- When the Weber Gas Barbecue is stored indoors, the gas supply must be **DISCONNECTED** and the LP tank stored outdoors in a well-ventilated space.
- LP tanks must be stored outdoors in a well- ventilated area out of reach of children. Disconnected LP tanks must not be stored in a building, garage or any other enclosed area.
- When the LP tank is not disconnected from the Weber Gas Barbecue, the appliance and LP tank must be kept outdoors in a well-ventilated space.

Storage and/or Nonuse continued

- The Weber Gas Barbecue should be checked for gas leaks and any obstructions in the burner tubes before using. (See Sections "General and Annual Maintenance.")
- Check that the areas under the control panel and the bottom tray are free from debris that might obstruct the flow of combustion or ventilation air.
- The Spider Stopper Guards should also be checked for any obstructions. (See Section "Annual Maintenance.")

Periodic Cleaning

⚠WARNING: Turn your Weber Gas Barbecue OFF and wait for it to cool before cleaning.

⚠CAUTION: Do not clean your Flavorizer Bars or cooking grates in a self-cleaning oven. Replacement cooking grates and Flavorizer Bars are available through your retailer or the Weber-Stephen Products Service Center.

Outside surfaces - Use a warm soapy water solution.

⚠CAUTION: Do not use oven cleaner, abrasive cleansers (kitchen cleansers), cleaners that contain citrus products or abrasive cleaning pads on barbecue or cart surfaces.

Bottom tray - Remove excess grease and then wash with warm soapy water.

Flavorizer Bars and Cooking Grates- Clean with a suitable brass bristle brush. As needed, remove from grill and wash with warm soapy water.

Catch pan - Disposable foil trays are available, or you can line the catch pan with aluminum foil. To clean the catch pan, wash with warm soapy water.

Thermometer - Wipe with warm soapy water, clean with plastic scrub ball. Do not put in dishwasher or submerge in water.

Inside cooking box - Brush any debris off of burners tubes. **DO NOT ENLARGE BURNER PORTS (OPENINGS).** Wash inside of cooking box with warm soapy water.

Inside Lid - While lid is warm, wipe inside with paper towel to prevent flaking due to grease build-up.

Molded table - Use any household cleaners on the table surface. **DO NOT USE CLEANERS THAT CONTAIN ACID, MINERAL SPIRITS OR XYLENE.** Rinse well after cleaning.

Refilling the LP tank

We recommend that you refill before the scale indicator reaches "E".

Note - If you run out of fuel, check the indicator setting and/or adjust the fuel scale indicator setting with the scale setting wing nut, while the tank is empty so you do not run out again.

Removal of the LP tank

1) Close tank valve (turn clockwise). Figure 3 (a).
2) Slide the collar back on the quick disconnect to disengage the fitting. Figure 3 (b).
3) Loosen tank lock wing nut and turn tank lock up out of the way.
4) Lift tank off.

To refill take LP tank and tank filler adapter to a "Gas Propane" dealer.

⚠WARNING: We recommend that your LP tank be filled at an authorized LP gas dealer, by a qualified attendant, who fills the tank by weight. IMPROPER FILLING IS DANGEROUS.

⚠WARNING: If you exchange your LP tank, make sure you get a similar tank in return. Your LP tank is equipped with a quick-disconnect valve and an OPD (Overfilling Prevention Device). Other LP tanks are not compatible with your barbecue connection.

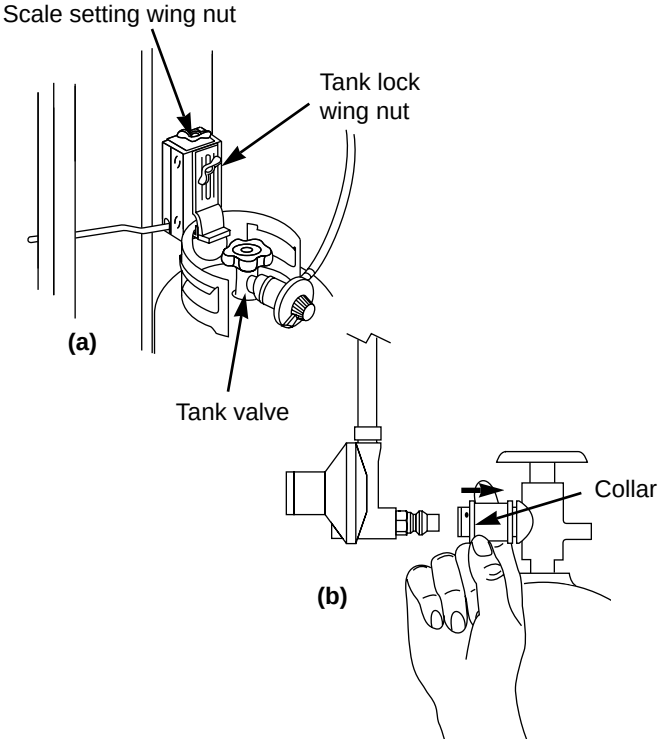

Figure 3

Connecting the filled LP tank

⚠WARNING: Make sure that the LP tank valve is closed. Close by turning clockwise.

> **⚠ DANGER**
>
> **Do not use an open flame to check for gas leaks. Be sure there are no sparks or open flames in the area while you check for leaks. This will result in a fire or explosion which can cause serious bodily injury or death and damage to property.**

You will need: LP tank, a soap and water solution and a rag or brush to apply it.

Note - Since some leak test solutions, including soap and water, may be slightly corrosive, all connections should be rinsed with water after checking for leaks

a) Lift and hook the tank onto the fuel scale.
b) Loosen the tank lock wing nut. Swing the tank lock down. Tighten the wing nut. Figure 4.

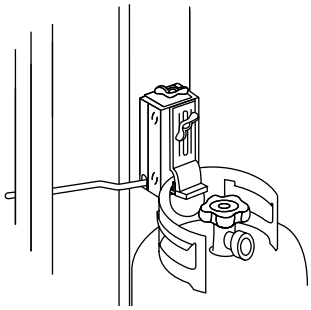

Figure 4

c) Connect the hose to the tank. Route the hose so it does not interfere with the scale indicator rod. Slide back the collar of the quick disconnect on the tank valve. Figure 5 (a). Push the male fitting of the regulator into the quick disconnect, and maintain pressure. Slide the collar closed. Figure 5 (b). If it does not engage or lock, repeat procedure. Gas will not flow unless the quick disconnect is properly engaged.

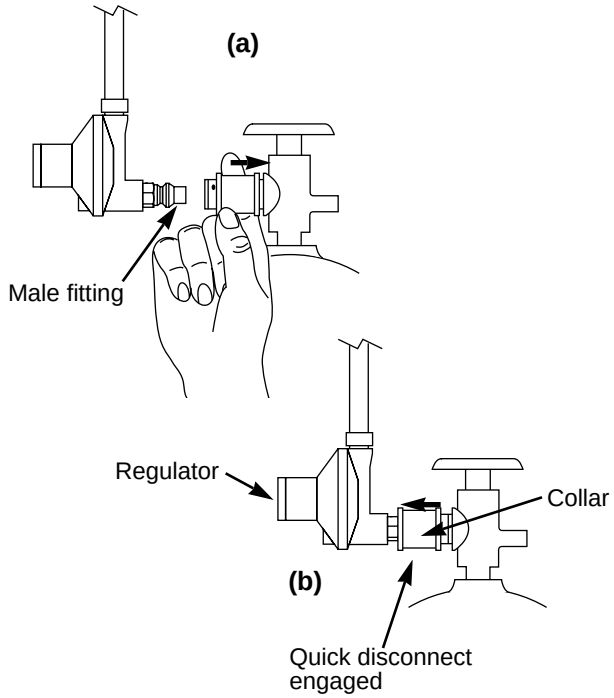

Figure 5

d) Mix soap and water.

e) Open the tank valve. Figure 6.

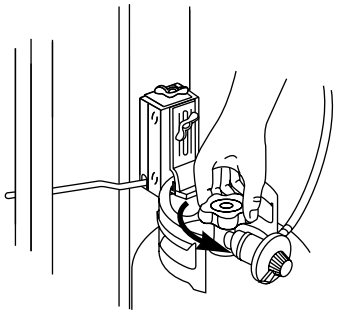

Figure 6

f) Check for leaks by wetting the fitting with the soap and water solution and watching for bubbles. If bubbles form or if a bubble grows there is a leak.

If leak does not stop, turn off the gas and contact Weber-Stephen Customer Service. Do not use the barbecue.

g) When leak checks are complete, turn gas supply OFF and rinse connections with water.

LP Tank

The LP tank manufacturer is responsible for the materials, workmanship and performance of the tank. If the tank has a defect, malfunctions, or you have a question regarding the tank, call the tank manufacturer's customer service center. The phone number is on the warning decal which is permanently attached to the tank. If the tank manufacturer has not resolved the issue to your satisfaction, then call Weber-Stephen Products Co., Customer Service Center.

Safe handling tips for LP Gas

- Liquid Propane (LP) gas is a petroleum product as are gasoline and natural gas. LP gas is a gas at regular temperatures and pressures. Under moderate pressure, inside a cylinder, LP gas is a liquid. As the pressure is released the liquid readily vaporizes and becomes gas.
- LP gas has an odor similar to natural gas. You should know this odor.
- LP gas is heavier than air. Leaking LP gas may collect in low areas that prevent dispersion.
- To fill, take the LP tank to an RV center, or look up gas-propane in the phone book for other sources of LP gas.

⚠WARNING: We recommend that your LP tank be filled at an authorized LP gas dealer, by a qualified attendant, who fills the tank by weight. IMPROPER FILLING IS DANGEROUS.

⚠WARNING: If you exchange your LP tank, make sure you get a similar tank in return. Your LP tank is equipped with a quick-disconnect valve and an OPD (Overfilling Prevention Device). Other LP tanks are not compatible with your barbecue connection.

- Air must be removed from a new LP tank before the initial filling. Your LP dealer is equipped to do this.
- The LP tank must be installed, transported and stored in an upright position. LP tanks should not be dropped or handled roughly.
- Never store or transport the LP tank where temperatures can reach 125° F (too hot to hold by hand - for example: do not leave the LP tank in a car on a hot day).

Note - A refill will last about 20 hours of cooking time at normal use. The fuel scale will indicate the propane supply so you can refill before running out. You do not have to run out before you refill.

- Treat "empty" LP tanks with the same care as when full. Even when the LP tank is empty of liquid there still may be gas pressure in the cylinder. **Always close the tank valve before disconnecting.**
- Do not use a damaged LP tank. Dented or rusty LP tanks or LP tanks with a damaged valve may be hazardous and should be replaced with a new one immediately.
- The joint where the hose connects to the LP tank must be leak tested each time the LP tank is reconnected. For example, test each time the LP tank is refilled.
- Be sure the regulator is mounted with the small vent hole pointed downward so it will not collect water. This vent should be free of dirt, grease, bugs etc.

Liquid Propane (LP) Tank(s)

- The LP tank and connections supplied with your Weber Gas Barbecue have been designed and tested to meet government, American Gas Association and Underwriters Laboratories requirements.
- Replacement LP tanks supplied by Weber satisfy the requirements. Check to be sure the tank has a D.O.T. certification, and has been tested within five years. Your LP gas supplier can do this for you. Figure 7.

If you have questions about spare LP tanks, please call Weber-Stephen Customer Service.

D.O.T. Certification (example)

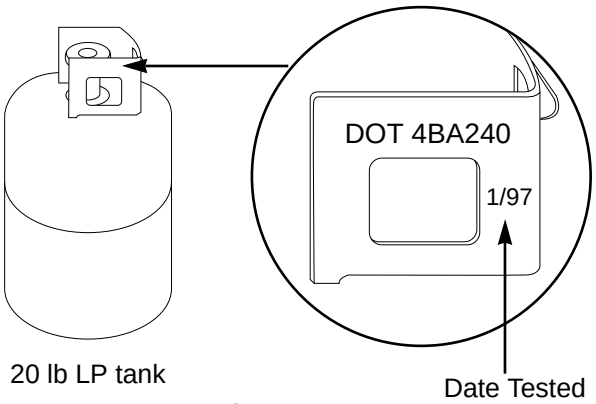

Figure 7

- All LP tank supply systems must include a collar to protect the tank valve.
- The LP tank must be a 20 lb size (18 1/4 inches high, 12 1/4 inches in diameter).
- The LP tank must be constructed and marked in accordance with the specifications for LP gas cylinders of the U.S. Department of Transportation (D.O.T.).

Annual Maintenance

After a period of nonuse we recommend that you perform the following maintenance procedures **for your safety**.

⚠WARNING: Check hose before each use of barbecue for nicks, cracking, abrasions or cuts. If the hose is found to be damaged in any way, do not use the barbecue. Replace using only Weber authorized replacement manifold assembly. Order from Weber-Stephen Products Co., Customer Service Center or authorized dealer.

- Inspect the burners for correct flame pattern. Clean if necessary, following the procedures outlined in the "General Maintenance" section of this manual.
- Check all gas fittings for leaks.

⚠ DANGER

Do not use an open flame to check for gas leaks. Be sure there are no sparks or open flames in the area while you check for leaks. This will result in a fire or explosion which can cause serious bodily injury or death, and damage to property.

⚠WARNING: You should check for gas leaks every time you disconnect and reconnect a gas fitting.

You will need: a soap and water solution and a rag or brush to apply it.

To perform leak checks: Make sure all burners are in the OFF position. Turn on gas supply.

Check for leaks by wetting the connections with the soap and water solution and watching for bubbles. If bubbles form or if a bubble grows there is a leak.

Note - Since some leak test solutions, including soap and water, may be slightly corrosive, all connections should be rinsed with water after checking for leaks.

⚠WARNING: Do not ignite burners while leak checking.

Check:

a) Hose to manifold connection. Figure 8 (a).

b) Regulator to tank connection. Figure 8 (b).

⚠WARNING: If there is a leak at connection (a) retighten the fitting with a wrench and recheck for leaks with soap and water solution.

If a leak persists after retightening the fitting, turn OFF the gas. DO NOT OPERATE THE BARBECUE. Contact Weber-Stephen Customer Service.

Check:

c) Valves to manifold connections. Figure 8 (c).

d) The hose to regulator connection. Figure 8 (d).

⚠WARNING: If there is a leak at connections (b), (c) or (d), turn OFF the gas. DO NOT OPERATE THE BARBECUE. Contact Weber-Stephen Customer Service.

When leak checks are complete, turn gas supply OFF at the source and rinse connections with water.

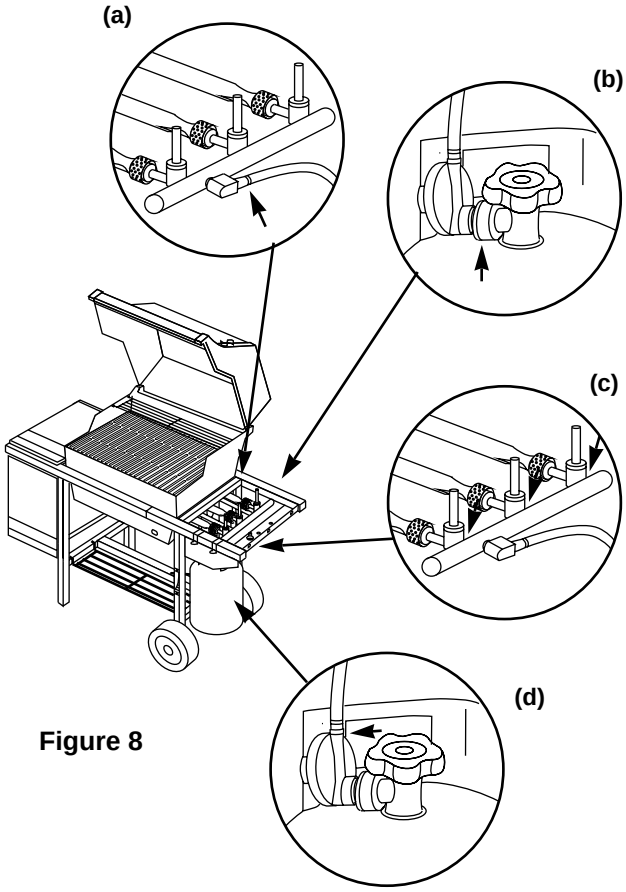

Figure 8

Inspection and Cleaning of the Weber Spider Stopper Guards

To inspect the Spider Stopper Guards, remove the control panel and look to see if they have dust or dirt on their outside surfaces. If they are dirty, brush off the outside surface of the Spider Stopper Guards with a soft bristle brush (an old toothbrush for example). Check that there are no gaps in the Spider Stopper Guards' seams or in the fit around the burners or valves. (See Section "General Maintenance".)

General Maintenance

Weber Spider Stopper Guards

Your Weber Gas Barbecue, as well as any outdoor gas appliance, is a target for spiders and other insects. They can nest in the venturi section of the burner tubes. This blocks the normal gas flow, and can cause the gas to flow back out of the air shutter. Figure 9. This could result in a fire in and around the air shutters, under the control panel, causing serious damage to your barbecue.

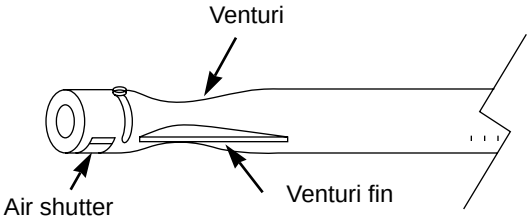

Figure 9

The Weber Spider Stopper Guard is factory installed. It fits tightly around the air shutter section of the burner tube and the valve, thereby preventing spiders and other insects access to the burner tubes through the air shutter openings. Figure 10.

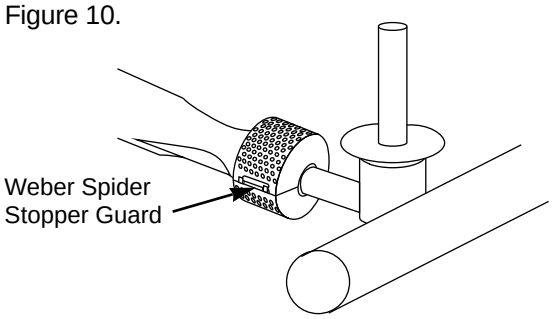

Figure 10

We recommend that you inspect the Weber Spider Stopper Guards at least once a year. (See Section "Annual Maintenance".) Also inspect and clean the Spider Stopper Guards if any of the following symptoms should ever occur.

1. The smell of gas in conjunction with the burner flames appearing yellow and lazy.
2. Barbecue does not reach temperature.
3. Barbecue heats unevenly.
4. One or more of the burners do not ignite.

⚠ DANGER

Failure to correct these symptoms may result in a fire which can cause serious bodily injury or death and cause damage to property.

Main Burner Flame Pattern

The Weber Gas Barbecue burners have been factory set for the correct air and gas mixture. The correct flame pattern is shown in Figure 11.

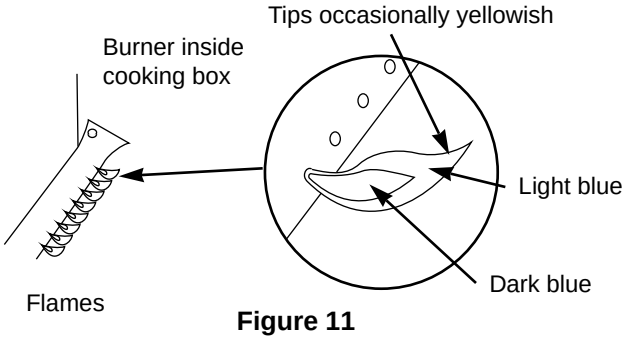

Figure 11

If the flames do not appear to be uniform the length of the burner tube, follow the burner cleaning procedures.

Main Burner Cleaning Procedure

Turn off the gas supply. Remove the manifold. (See Section "Replacing the main burners".)

Look inside each burner with a flashlight. Figure 12.

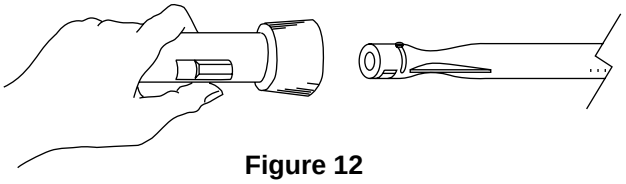

Figure 12

Clean the inside of the burners with a wire (a straightened out coat hanger will work). Figure 13. Check and clean the air shutter opening at the ends of the burners. Check and clean the valve orifices at the base of the valves. Use a brass bristle brush to clean outside of burners. This is to make sure all the burner ports are fully open.

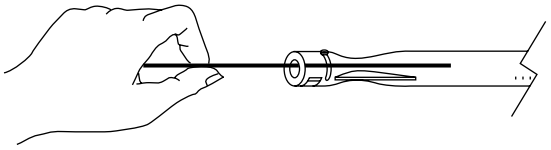

Figure 13

⚠CAUTION: Do not enlarge the burner ports when cleaning.

Replacing Main Burners

a) Your Weber Gas Barbecue must be OFF and cool.

b) Turn gas OFF at source.

c) Remove control panel: take off the burner control knobs. Remove the screws holding the control panel in place. Lift off the control panel.

d) Unlatch the Spider Stopper Guards and remove. Figure 14.

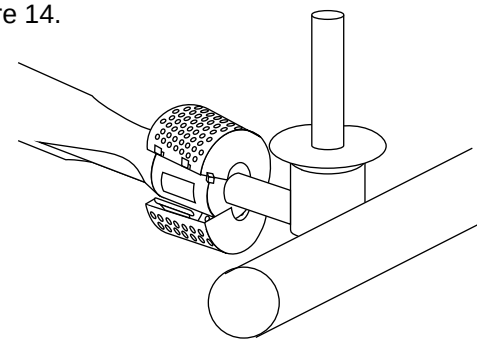

Figure 14

e) Remove the manifold bracket and unscrew the two wing nuts that hold the manifold to the cooking box. Pull the manifold and valve assembly out of the burners and carefully set it down. Figure 15.

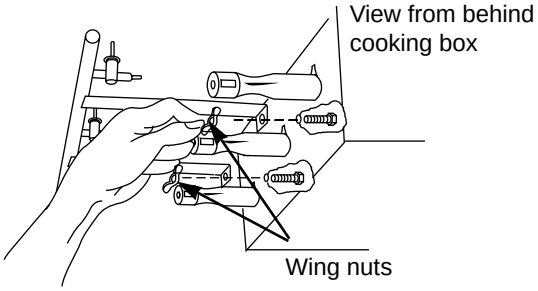

Figure 15

f) Slide the burner assembly out from under the guide screw and washer in the corners of the cooking box. Figure 16.

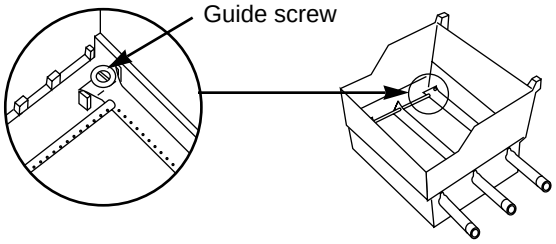

Figure 16

g) Lift and twist the burner assembly slightly, to separate the crossover tube from the burners. Figure 17. Remove the burners from the cooking box.

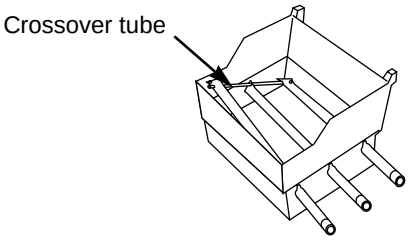

Figure 17

h) To reinstall the burners, reverse steps c) through g).

⚠CAUTION: The burner openings must be positioned properly over the valve orifices. Figure 18a.

Check proper assembly before fastening manifold in place. Figure 18b.

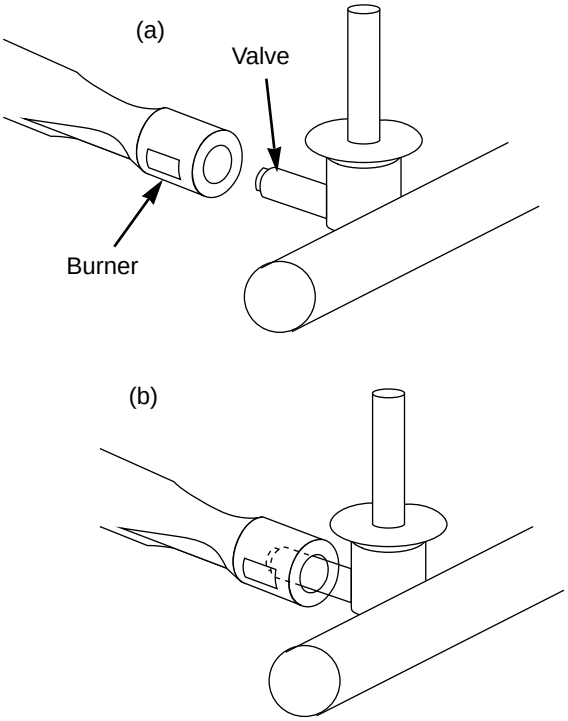

Figure 18

i) Reinstall the Spider Stopper Guards. Slightly rotate the Spider Stopper Guards so that the seams are in line with the Venturi fins. There should be no gaps in the seams or in the fit around the burners and valves. Figure 19.

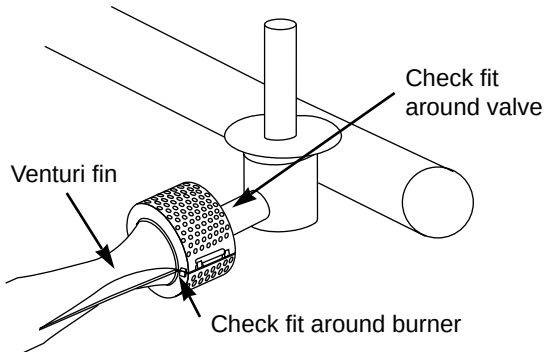

Figure 19

⚠CAUTION: If the Spider Stopper Guards do not fit tightly, contact Weber-Stephen Customer Service.

⚠WARNING: After reinstalling the gas lines, they should be leak checked with a soap and water solution before using the barbecue. (See Step“Check for gas leaks”).

Crossover Ignition System Operations

If the Crossover Ignition System fails to ignite the Front burner, light the Front burner with a match. If the Front burner lights with a match, then check the Crossover Ignition System.

- Check that both the white and black ignition wires are attached properly. Figure 20.

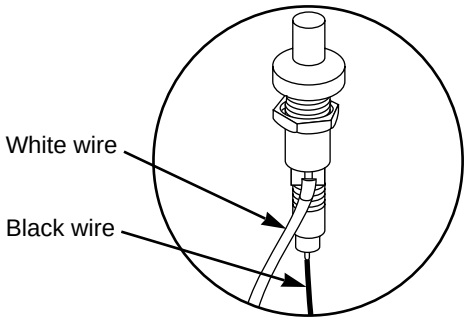

Figure 20

- Check that the Crossover Ignition button pushes the igniter (button) down, and returns to the up position.
- Check to see if the igniter is loose in the frame. Tighten if necessary; see Step “Install igniter” for correct procedure.

If the Crossover Ignition System still fails to light, contact Weber-Stephen Customer Service.

TROUBLESHOOTING

Problem	Check	Cure
Burners burn with a yellow or orange flame, in conjunction with the smell of gas.	Inspect Weber Spider Stopper Guards for possible obstructions. (Blockage of holes.)	Clean Weber Spider Stopper Guards. (See Section "Annual Maintenance".)
Burners do not light. -or- Burners have a small flickering flame in the HIGH position. -or- Barbecue temperature only reaches 250˚ to 300˚ degrees in the HIGH position.	The excess flow safety device, which is part of the barbecue to tank connection, may have activated.	To reset the excess flow safety device turn all burner control knobs and the tank valve OFF. Disconnect the regulator from the tank. Turn burner control knobs to HIGH. Wait at least 1 minute. Turn burner control knobs OFF. Reconnect the regulator to the tank. Turn tank valve on slowly. Refer to “Lighting Instructions”.
Burner does not light, or flame is low in HIGH position.	Is LP fuel low or empty?	Refill LP tank.
	Is fuel hose bent or kinked?	Straighten fuel hose.
	Does the Front burner light with a match?	If you can light the Front burner with a match, then check the Crossover Ignition System.
Experiencing flare-ups:	Are you preheating barbecue in the prescribed manner?	All burners on high for 10 to 15 minutes for preheating.
	Are the cooking grates and Flavorizer Bars heavily coated with burned-on grease?	Clean thoroughly. (See Section "Periodic Cleaning".)
⚠CAUTION: Do not line the bottom tray with aluminum foil.	Is the bottom tray "dirty" and not allowing grease to flow into catch pan?	Clean bottom tray.
Burner flame pattern is erratic. Flame is low when burner is on HIGH. Flames do not run the whole length of the burner tube.	Are burners clean?	Clean burners. (See Section "General Maintenance".)
Inside of lid appears to be “peeling.” (Resembles paint peeling.)	The lid is porcelain-on-steel, not paint. It cannot “peel.” What you are seeing is baked on grease that has turned to carbon and is flaking off. **THIS IS NOT A DEFECT.**	Clean thoroughly. (See Section "Periodic Cleaning".)
Fuel scale shows that there is gas in the LP tank, but tank is empty.	Check adjustment of fuel scale.	Fuel scale must be adjusted with an empty tank.

If problems cannot be corrected by using these methods, please contact Weber-Stephen Customer Service.

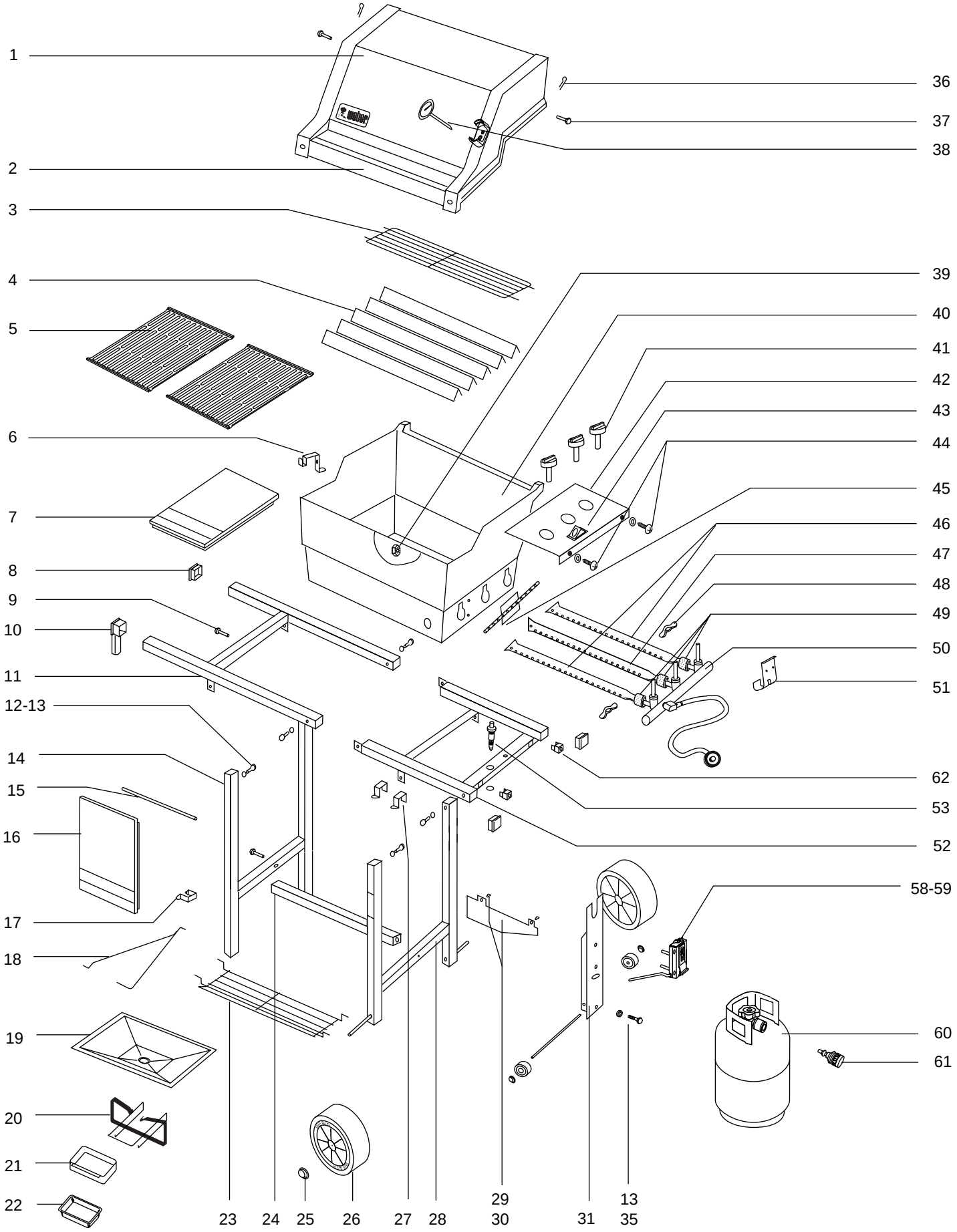
1
2
3
4
5
6
7
8
9
10
11
12-13
14
15
16
17
18
19
20
21
22
23
24
25
26
27
28
29
30
31
13
35
36
37
38
39
40
41
42
43
44
45
46
47
48
49
50
51
52
53
62
58-59
60
61

Parts List

All items are single quantities unless otherwise specified.

Parts can be ordered directly from Weber-Stephen Products Company by phone or mail.

Note - Do not return parts to Weber-Stephen Products Co. without first contacting the Customer Service Center by phone or mail. Returning the part may not be necessary.

While we give much attention to our products, unfortunately an occasional error may occur. If a part is missing, do not go back to the store. Call the Weber Customer Service Center toll free **1-800-446-1071** to receive immediate assistance. Have your owner's manual and serial number of the barbecue available for reference.

Weber-Stephen Products Company
Customer Service Center
250 South Hicks Road
Palatine, IL 60067-6241
(800) 446-1071

1 Lid (assembly)
2 Lid handle
3 Warming rack
4 Flavorizer bars (5)
5 Cooking grates (2)
6 Work table spacer
7 Work table
8 Tubing plugs (7)
9 1/4-20 x 2 inch bolt
10 Swing table end bracket
11 Left frame
12 1/4-20 x 1/2 inch bolts (6)
13 1/4 inch nylon washers (11)
14 Leg frame
15 Hinge rod
16 Swing table
17 Support rod holder
18 Support rod
19 Bottom tray
20 Catch pan holder
21 Catch pan
22 Drip pans (2)
23 Accessory rack
24 Frame connector
25 Wheel hubcaps (2)
26 Wheels (2)
27 Tool holders (2)
28 Wheel frame
29 Front panel
30 Plastic buttons (2)
31 Tank glides (2)
32 Glide axle
33 Glide hubcaps (2)
34 Tank panel
35 1/4-20 x 1 3/4 inch bolts (2)
36 Hair pin cotters (2)
37 Hinge pins (2)
38 Thermometer
39 1/4-20 keps nut
40 Cooking box
41 Burner control knobs (3)
42 Control panel
43 Igniter button
44 Phillips screws/washers (2)
45 Crossover tube
46 Front and back burners (2)
47 Center burner
48 1/4-20 stainless steel wing nuts (2)
49 Spider Stopper Guards (3)
50 Manifold assembly
51 Manifold bracket
52 Right frame
53 Igniter
54 Igniter lock nut
55 Gas catcher ignition chamber
56 Igniter wire (black)
57 Igniter wire (white)
58 Fuel scale
59 1/4-20 wing nuts (2)
60 LP tank
61 Filler adapter
62 Control panel inserts (2)

⚠WARNING: Use only Weber factory authorized parts. The use of any part that is not factory authorized can be dangerous. This will also void your warranty.

A Final Word of Thanks

Thank you for choosing a Weber Barbecue. Our family here at Weber has worked hard to produce the highest quality products for your satisfaction.

While we give much attention to our products, an occasional error may occur. Our knowledgeable Customer Service staff is prepared to help you with any problems with parts or assembly. Call our toll free number 1-800-446-1071. For quicker service, please have your owner's manual available for reference. We also welcome any comments or suggestions you might have regarding our products.

We wish your family the best in outdoor cooking enjoyment.

Weber-Stephen Products Company
Customer Service Center
200 East Daniels Road
Palatine, Illinois 60067-6266